DUPLEX PUMP STATION
ELECTRICAL DRAWING INDEX

STANDARD DRAWINGS
E-1 ELECTRICAL DRAWING INDEX
E-2 ELECTRICAL SYMBOLS LEGEND & ABBREVIATIONS

DUPLEX PUMP STATION SITES
E-3 STANDARD 208V-3ø (0-30HP) DUPLEX PUMP STATION POWER, BONDING & GROUNDING PLAN
E-4 STANDARD 208V-3ø (0-30HP) DUPLEX PUMP STATION ELECTRICAL EQUIPMENT RACK ELEVATION
E-5 STANDARD 208V-3ø (0-30HP) DUPLEX PUMP STATION ELECTRICAL RISER DIAGRAM
E-6 STANDARD 208V-3ø (0-30HP) DUPLEX PUMP STATION CONTROL PANEL ELEVATION
E-7 STANDARD 208V-3ø (0-30HP) DUPLEX PUMP STATION CONTROL PANEL ELEMENTARY DRAWING
E-7 STANDARD 208V-3ø (0-30HP) DUPLEX PUMP STATION CONTROL PANEL ELEMENTARY DRAWING
E-8 STANDARD 208V-3ø (0-30HP) DUPLEX PUMP STATION CONTROL PANEL ELEMENTARY DRAWING
E-8 STANDARD 208V-3ø (0-30HP) DUPLEX PUMP STATION CONTROL PANEL ELEMENTARY DRAWING
E-9 STANDARD 208V-3ø (0-30HP) DUPLEX PUMP STATION CONTROL PANEL ELEMENTARY DRAWING
E-9 STANDARD 208V-3ø (0-30HP) DUPLEX PUMP STATION CONTROL PANEL ELEMENTARY DRAWING
E-10 STANDARD 208V-3ø (0-30HP) DUPLEX PUMP STATION CONTROL PANEL ELEMENTARY DRAWING
E-11 STANDARD 208V-3ø (0-30HP) DUPLEX PUMP STATION DATA COLLECTOR INSTALLATION DRAWING

STANDARD DETAIL DRAWINGS
ES-1 JUNCTION BOX AND TERMINAL STRIP INSTALLATION AT CONTROL PANEL LOCATION
ES-2 GROUNDING DETAILS
ES-3 STREAMER RETARDING FIXTURE AIR TERMINAL FIXTURE POLE MOUNTED
ES-4 LEVEL TRANSMITTER DETAIL
ES-5 TERMINATION OF SHIELDED INSTRUMENT CONTROL CABINET DETAIL
ES-6 INSTRUMENT GROUNDING & SURGE PROTECTION DETAIL
ES-7 UNDERGROUND CONDUIT INSTALLATION
ES-8 GROUND ROD INSTALLATION DETAIL

GENERAL NOTE:

SITE SPECIFIC CONDITIONS DETERMINE THE CLASSIFICATION OF PUMP STATION IN ACCORDANCE WITH FDEP STANDARDS AND MUST BE DETERMINED BY THE DESIGN ENGINEER FOR EACH SPECIFIC PROJECT.

SUBMITTAL REQUIREMENT:

LEE COUNTY UTILITIES REQUIRES PUMP STATION SUBMITTALS BE PROVIDED FOR THEIR REVIEW TO ENSURE COMPLIANCE WITH THE LCU PUMP STATION STANDARDS.

ELECTRICAL DRAWING INDEX

E-1

NOTE:
THIS DRAWING IS A LEE COUNTY STANDARD DETAIL AND THEREFORE DOES NOT NEED TO BE SIGNED AND SEALED

LEE COUNTY SOUTHWEST FLORIDA
1500 MONROE STREET
LEE COUNTY UTILITIES ENGINEERING
FORT MYERS, FLORIDA 33901

SHEET TITLE: DUPLEX PUMP STATION DRAWING INDEX

TITLE: STANDARD 208V-30 (0-30HP) DUPLEX PUMP STATION

PROJECT: WASTE WATER DUPLEX, TRIPLEX PUMP STA. MASTER PUMP STATION DESIGN STANDARD

PROJECT NO.:	FILE NAME:	SHEET NUMBER:
208V-30 DPS	Duplex 208 3P	1 OF 10

CONTROL/ELEMENTARY SYMBOLS

- NORMALLY OPEN CONTACT
- NORMALLY CLOSED CONTACT
- LIMIT SWITCH, NORMALLY OPEN
- LIMIT SWITCH, NORMALLY CLOSED
- PRESSURE SWITCH, NORMALLY OPEN
- PRESSURE SWITCH, NORMALLY CLOSED
- FLOAT SWITCH, NORMALLY OPEN
- FLOAT SWITCH, NORMALLY CLOSED
- FLOW SWITCH, NORMALLY OPEN
- FLOW SWITCH, NORMALLY CLOSED
- TEMPERATURE SWITCH, NORMALLY OPEN
- TEMPERATURE SWITCH, NORMALLY CLOSED
- NORMALLY OPEN, TIMED TO CLOSE CONTACT
- NORMALLY CLOSED, TIMED TO OPEN CONTACT
- NORMALLY CLOSED, TIMED TO CLOSE CONTACT
- NORMALLY OPEN, TIMED TO OPEN CONTACT
- AIT — ANALYZER INDICATOR TRANSMITTER
- AR — ALARM RELAY
- AT — ALARM TIMER
- CR — CONTROL RELAY
- F/T FIT — FLOW INDICATOR TRANSMITTER (TOTALIZER)
- FSH FSL — FLOW SWITCH HIGH/LOW
- LLS FS — LIQUID LEVEL SWITCH
- L/T LIT — LEVEL INDICATOR TRANSMITTER
- LS — LIMIT SWITCH OR LEVEL SWITCH
- M — MOTOR SWITCH MANUAL
- MOTOR STARTER
- P/G — PRESSURE GAUGE
- PFT — PROCESS FLOW TIMER
- PS — PRESSURE SWITCH
- TS — TEMPERATURE SWITCH
- TR — TIMING RELAY
- S/S — SURGE SUPPRESSION DEVICE
- SV — SOLENOID VALVE
- VS — VIBRATION SWITCH
- TSH — TORQUE SWITCH
- ZS — ZERO SPEED SWITCH
- A — ALARM INDICATING LIGHT
- R — RUN INDICATING LIGHT
- MOMENTARY CONTACT PUSHBUTTON
- MOMENTARY BREAK PUSHBUTTON OR RESET
- KEYED SWITCH
- MAINTAINED CONTACT ON-OFF SWITCH
- START/STOP (S/S) CONTROL SWITCH MAINTAINED CONTACT
- FUSE
- MOLDED CASE CIRCUIT BREAKER
- CONTROL POWER TRANSFORMER
- REMOTE TERMINAL BLOCK POINT
- COPPERWELD GRD. ROD
- HAND OFF REMOTE CONTROL STATION
- HAND OFF AUTO CONTROL STATION
- MOTOR STRIP HEATER

ELECTRICAL PLAN SYMBOLS

- $ — WALL OUTLET BOX AND 20 AMP SINGLE POLE SWITCH ('a' INDICATES SWITCHES) 48" TO CETERLINE
- $ — WALL OUTLET BOX AND 20 AMP 3-WAY SWITCH ('a' INDICATES SWITCHES) 48" TO CTR LINE.
- $ — MANUAL MOTOR STARTING SWITCH WITH OVERLOADS AND PILOT LIGHT. NEMA 4X TYPICAL
- $ — WALL OUTLET BOX AND 20 AMP SWITCH WITH WEATHERPROOF COVER OR ENCLOSURE.
- WALL OUTLET BOX AND 20 AMP DUPLEX RECEPTACLE 18" TO CENTERLINE
- WALL OUTLET BOX AND 20 AMP DUPLEX RECEPT MOUNTED 48"AFF OR AS NOTED.
- WALL OUTLET BOX AND 20 AMP GFCI DUPLEX RECEPTACLE AT 18" TO CENTERLINE. WP INDICATES WEATHERPROOF COVER PLATE.
- WALL OUTLET BOX AND 20 AMP GFCI RECEPTACLE MOUNTED 48"AFF OR AS NOTED.
- WALL OUTLET BOX AND DOUBLE 20 AMP DUPLEX RECEPTACLES 18" TO CENTERLINE
- J — FLUSH MOUNTED JUNCTION BOX (SURFACE IN MECH/ELEC SPACES OR ABOVE CEILINGS).
- BRANCH CIRCUIT CONDUIT AND WIRE GENERALLY SURFACE MOUNTED, CONCEALED ABOVE CEILINGS SLASH MARKS INDICATE NUMBER OF CONDUCTORS; (MARKS SHOWN TO AID CONTRACTOR IN BIDDING, THE CONTRACTOR SHALL PROVIDE THE REQUIRED CONDUCTORS UNDER THE CONTRACT SUM WHETHER OR NOT SHOWN). SHORT SLASHES INDICATE PHASE CONDUCTOR OR SWITCH LEG, LONG INDICATE NEUTRAL CONDUCTOR. GREEN GROUND CONDUCTOR NOT SHOWN; ALL CONDUITS REQUIRE COPPER GROUND CONDUCTOR. TWO CONDUCTORS PLUS GROUND REQUIRED, MINIMUM.
- CONDUIT AND WIRE CONCEALED IN FLOOR SLAB OR UNDERGROUND.
- BRANCH CIRCUIT PANELBOARD AS NOTED; SEE PANEL SCHEDULES
- DISCONNECT SWITCH SIZE PER EQUIPMENT NAME PLATE OR AS NOTED: FOR DISCONNECTS SERVING MOTOR LOADS OF 10HP OR GREATER AND FOR ALL MOTOR LOADS SERVED THROUGH VARIABLE FREQUENCY DRIVES; PROVIDE SURGE SUPPRESSION DEVICE EQUAL TO SQ.-D. SP3650 OR EQUAL AT DISCONNECT.
- MOTOR CONNECTION
- MANUAL TRANSFER SWITCH OR REVERSING SWITCH

LIGHTING FIXURES SYMBOLS

- LED FIXTURE POLE MOUNTED SEE DETAIL

SYSTEM SYMBOL LEGEND

- SYSTEMS CABINET AS NOTED OR MARKED.
- LIGHTNING PROTECTION AIR TERMINAL STREAMER RETARDING TYPE.
- STREAMER RETARDING AIR TERMINAL MOUNTED TO LIGHT POLE.

SINGLE LINE DIAGRAM SYMBOLS

- V — VOLTMETER
- PF — POWER FACTOR METER
- KW — KILOWATT METER
- A — AMMETER
- VS — THREE PHASE VOLT SWITCH
- AS — THREE PHASE AMP SWITCH
- AT — CURRENT TRANSMITTER
- KW — KILOWATT TRANSMITTER
- PFT — POWER FACTOR TRANSMITTER
- CP — LOCAL CONTROL PANEL
- GFI — GROUND FAULT INTERRUPTER
- W — WATT HOUR METER
- FUSE
- CAPACITOR
- DRAW-OUT CIRCUIT BREAKER
- MOULDED CASE CIRCUIT BREAKER
- TYPICAL STARTER CONTROL. SEE SWITCHGEAR CONTROL DIAGRAMS FOR EXACT TYPE.
- ELECTRIC A.C. MOTOR, NO. INDICATES HORSEPOWER.
- ELECTRIC D.C. MOTOR, NO. INDICATES HORSEPOWER.
- SERVICE OR EQUIPMENT GROUND.
- NON-FUSIBLE DISCONNECT SWITCH, 30A,3P UNLESS OTHERWISE INDICATED.
- NON-FUSIBLE DISCONNECT SWITCH, 30A,3P UNLESS OTHERWISE INDICATED, WITH REMOTE CONTROL STATION AS REQUIRED BY ELEMENTARY DIAGRAMS OR SPECS.
- LIGHTING PANELBOARD
- POWER PANELBOARD
- K — KIRK KEY INTERLOCK
- CURRENT TRANSFORMERS
- POTENTIAL TRANSFORMERS
- MANUAL OR AUTOMATIC TRANSFER SWITCH

ABBREVIATIONS LIST

A	AMPS
AF	AMP FRAME
AIC	AMPS INTERRUPTING CURRENT
ALUM	ALUMINUM
AT	AMP TRIP
ATS	AUTOMATIC TRANSFER SWITCH
AVAIL	AVAILABLE
AWG	AMERICAN WIRE GAUGE
C.	CONDUIT
CAB	CABINET
CAT	CATEGORY
CONV	CONVERSION
CRCC	CELLULAR ROUTER COMMUNICATION CABINET
CU	COPPER
D	DEPTH
DIA	DIAMETER
DRGS	DRAWINGS
ENET	ETHERNET
EXT	EXTERNAL
FOCC	FIBER OPTIC CONVERSION CABINET
FPL	FLORIDA POWER AND LIGHT
GND OR GRD. OR G.	GROUND
H	HEIGHT
HZ	HERTZ
I&C	INSTRUMENTATION AND CONTROLS
I/O	INPUT/OUTPUT
INST	INSTRUMENT
INT	INTERNAL
KVA	KILOVOLT-AMPERES (1VA*10^3)
LCU	LEE COUNTY UTILITIES
LT	LIGHT
MA	MILLIAMPS (1A*10^-3)
MCB	MAGNETIC CIRCUIT BREAKER
MIN	MINIMUM
NA	NOT APPLICABLE
NEC	NATIONAL ELECTRIC CODE
NEMA	NATIONAL ELECTRIC MANUFACTURERS ASSOCIATION
NTS	NOT TO SCALE
P	POLE
PH	PHASE
P&ID	PROPORTIONAL INTEGRAL DERIVATIVE
PLC	PROGRAMMABLE LOGIC CONTROLLER
PW	PRODUCTION WELL
MPZ	MINI POWER ZONE
SCH	SCHEDULE
SE	SERVICE ENTRANCE
SPD	SURGE PROTECTION DEVICE
SS	STAINLESS STEEL
TEMP	TEMPERATURE OR TEMPORARY
TSP	TWISTED SHIELDED PAIR
TYP	TYPICAL
U.G.	UNDERGROUND
UPS	UNINTERRUPTIBLE POWER SOURCE
V	VOLTS
VA	VOLT-AMPERES (APPARENT POWER)
VAC	VOLTS ALTERNATING CURRENT
VDC	VOLTS DIRECT CURRENT
VFD	VARIABLE FREQUENCY DRIVE
W	WATTS (REAL POWER)
PCP	PUMP CONTROL PANEL
W/	WITH
XFMR	TRANSFORMER
"	INCHES
' OR FT	FEET
# OR NO.	NUMBER
E# OR 1#	11"X17" SHEET
ES-#	8.5"X11" SHEET
FDEP	FLORIDA DEPARTMENT OF ENVIRONMENTAL PROTECTION

E-2

ELECTRICAL SYMBOLS LEGEND & ABBREVIATIONS

NOTE:
THIS DRAWING IS A LEE COUNTY STANDARD DETAIL AND THEREFORE DOES NOT NEED TO BE SIGNED AND SEALED

LEE COUNTY SOUTHWEST FLORIDA
1500 MONROE STREET

LEE COUNTY UTILITIES ENGINEERING
FORT MYERS, FLORIDA 33901

SHEET TITLE: DUPLEX PUMP STATION NOTES & ABBREVIATIONS

TITLE: STANDARD 208V-30 (0-30HP) DUPLEX PUMP STATION

PROJECT: WASTE WATER DUPLEX, TRIPLEX PUMP STA. MASTER PUMP STATION DESIGN STANDARD

PROJECT NO.:	FILE NAME:	SHEET NUMBER:
208V-30 DPS	Duplex 208 3P	2 OF 10

MINIMUM EQUIPMENT RACK LAYOUT BASED ON THE FOLLOWING:

ADJUST EQUIPMENT RATINGS AND DIMENSIONS FOR SPECIFIC PUMP STATION HORSEPOWER AND SERVICE SIZE (MINIMUM 100A SERVICE SIZE). IN NO CASE SHALL DIMENSIONS BE PERMITTED TO BE REDUCED IN SIZE.

EQUIPMENT	SIZE	H(IN)	W(IN)	D(IN)
UTILITY MAIN DISCONNECT (0–2HP)	100A	21	12	7
UTILITY MAIN DISCONNECT (3HP–10HP)	200A	30	20	9
UTILITY MAIN DISCONNECT (15HP–30HP)	400A	47	27	11
PUMP STATION CONTROL PANEL (0–2HP)	150AF/100AT	48	60	16
PUMP STATION CONTROL PANEL (3HP–10HP)	250AF/250AT	48	60	16
PUMP STATION CONTROL PANEL (15HP–30HP)	400AF/350AT	48	60	16

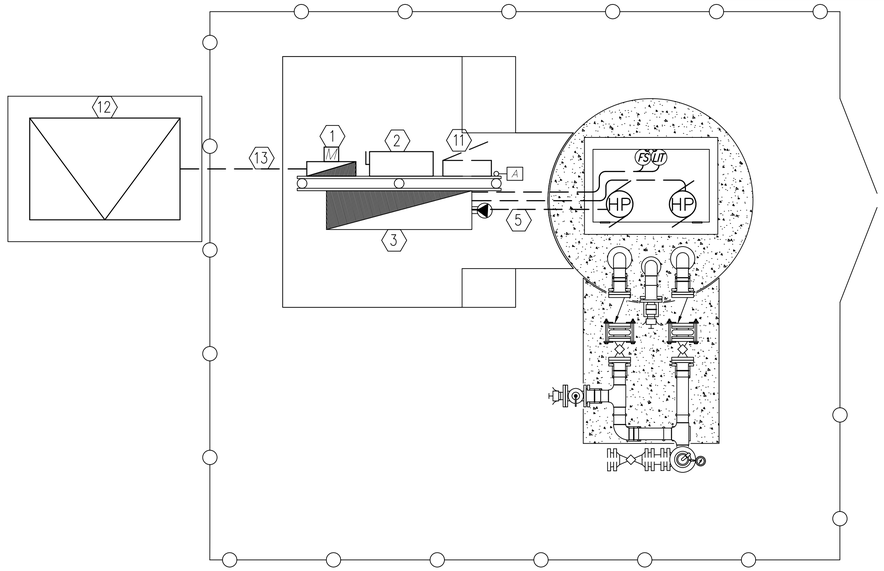

POWER PLAN

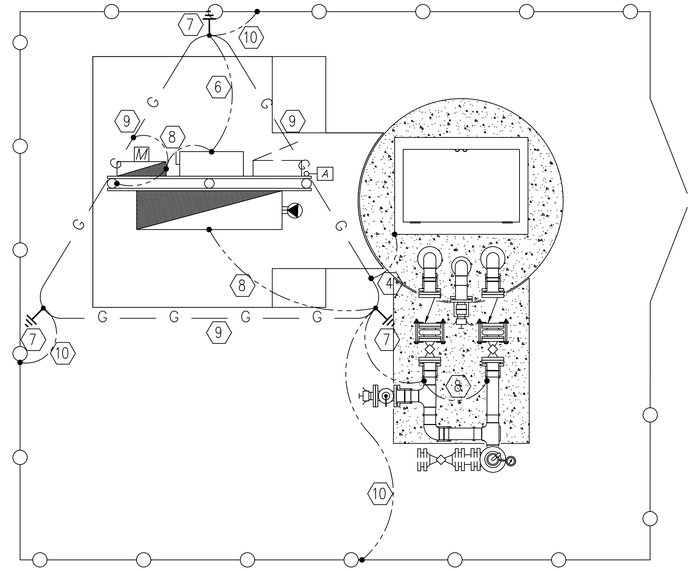

BONDING & GROUNDING PLAN

GENERAL NOTES

1.) ALL EQUIPMENT SHALL BE HUNG ON EQUIPMENT RACK. OPEN WINDOW CUTTING OF ENCLOSURE BOTTOMS IS NOT PERMITTED.

2.) REFERENCE SINGLE LINE DRAWING FOR CONDUIT AND WIRE SIZE.

3.) ALL U.G. CONNECTIONS TO BE VIA EXOTHERMIC WELD (CADWELD) UNLESS INDICATED OTHERWISE.

4.) ALL REQUIRED BONDS MAY NOT BE SHOWN; PROVIDE ADDITIONAL BONDS TO ALL DEVICES, INSTRUMENTS, CABINETS, CONTROL VALVES, ETC. AS REQUIRED TO COMPLY WITH UL AND NEC.

KEYNOTES

1.) ALUMINUM DIRECT READING UTILITY METER.

2.) MAIN SERVICE DISCONNECT.

3.) DEP COMPLIANT PUMP CONTROL PANEL WITH PORTABLE GENERATOR RECEPTACLE.

4.) BOND TO HINGE CORNER OF HATCH FRAME. DRILL TAP AS REQUIRED.

5.) (3) MINIMUM 2" CONDUITS INTO WETWELL. (2) FOR SUBMERSIBLE PUMP CABLES, (1) FOR FLOATS AND LIT CABLES. CORE DRILL NEW PENETRATIONS THROUGH WETWELL. PATCH ALL WITH HYDROCEMENT.

6.) TINNED STRANDED COPPER ELECTRIC SERVICE MAIN GROUNDING ELECTRODE CONDUCTOR. SIZE PER SITE SPECIFIC SERVICE REQUIREMENTS.

7.) 20' DRIVEN GROUND ROD WITH INSPECTION TEST WELL (SEE DETAIL). TYPICAL.

8.) #2 TINNED SOLID COPPER BOND. TYPICAL.

9.) #2/0 TINNED STRANDED COPPER COUNTERPOISE LOOP GROUND. TYPICAL.

10.) #2/0 TINNED SOLID BARE BOND TO GROUND GRID.

11.) PROVIDE SPACE FOR FUTURE 120/208V 3PH–4WIRE PANELBOARD.

12.) UTILITY PADMOUNT TRANSFORMER OR AERIAL TRANSFORMER BANK. COORDINATE SERVICE CHARACTERISTICS, EXACT LOCATION AND PRIMARY FEEDER DETAILS WITH UTILITY. PROVIDE GROUNDING, TRANSFORMER PAD AND CONDUIT ENTRY PER UTILITY REQUIREMENTS.

13.) UNDERGROUND SERVICE LATERAL.

LIGHTNING PROTECTION LEGEND:

LP	MAIN ROOF/DOWN CONDUCTOR TYPICAL
G	#2/0 TINNED BARE COPPER COUNTERPOISE LOOP GROUND.
	#2 TINNED SOLID COPPER BOND TO EQUIPMENT/CABINETS ETC.

E–3

STANDARD 208V–3Ø (0–30HP) DUPLEX PUMP STATION
POWER, BONDING & GROUNDING PLAN

NOTE:
THIS DRAWING IS A LEE COUNTY STANDARD DETAIL AND THEREFORE DOES NOT NEED TO BE SIGNED AND SEALED

LEE COUNTY SOUTHWEST FLORIDA
1500 MONROE STREET

LEE COUNTY UTILITIES ENGINEERING
FORT MYERS, FLORIDA 33901

SHEET TITLE: DUPLEX PUMP STATION POWER BONDING & GROUNDING PLAN

TITLE: STANDARD 208V-30 (0-30HP) DUPLEX PUMP STATION

PROJECT: WASTE WATER DUPLEX, TRIPLEX PUMP STA. MASTER PUMP STATION DESIGN STANDARD

PROJECT NO.:	FILE NAME:	SHEET NUMBER:
208V-30 DPS	Duplex 208 3P	3 OF 10

GENERAL NOTES

1.) ALL CONDUIT PENETRATIONS INTO ELECTRICAL ENCLOSURE ARE REQUIRED TO BE MADE USING MYERS HUBS.

2.) ALL CONDUIT PENETRATIONS INTO ELECTRICAL EQUIPMENT SHALL BE INSTALLED ALONG BOTTOM OF EACH ENCLOSURE.

PROVIDE SHOP DRAWINGS FROM A FLORIDA REGISTERED PROFESSIONAL ENGINEER CERTIFYING THAT THE ALUMINUM POST FOUNDATION AND RACK MEET CURRENT FLORIDA BUILDING CODE AND WIND LOAD REQUIREMENTS.

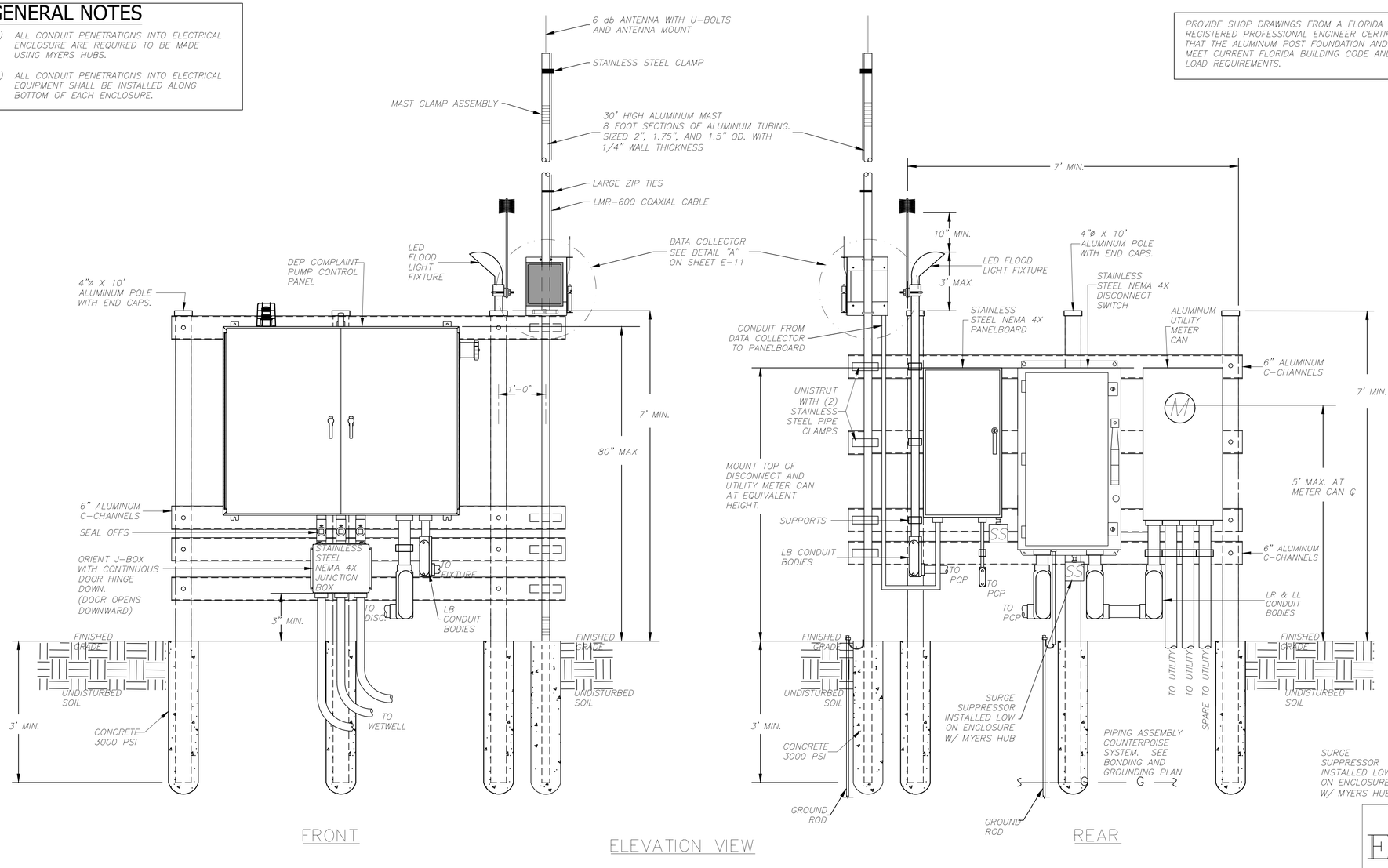

E-4

STANDARD 208V-3Ø (0-30HP) DUPLEX PUMP STATION
ELECTRICAL EQUIPMENT RACK ELEVATION

NOTE:
THIS DRAWING IS A LEE COUNTY STANDARD DETAIL AND THEREFORE DOES NOT NEED TO BE SIGNED AND SEALED

LEE COUNTY SOUTHWEST FLORIDA 1500 MONROE STREET	LEE COUNTY UTILITIES ENGINEERING FORT MYERS, FLORIDA 33901
SHEET TITLE:	DUPLEX PUMP STATION ELECTRICAL EQUIPMENT RACK ELEVATION
TITLE:	STANDARD 208V-30 (0-30HP) DUPLEX PUMP STATION
PROJECT:	WASTE WATER DUPLEX, TRIPLEX PUMP STA. MASTER PUMP STATION DESIGN STANDARD
PROJECT NO.: 208V-30 DPS	FILE NAME: Duplex 208 3P
SHEET NUMBER:	4 OF 10

PROVIDE MINIMUM SERVICES UTILITY SIZES AS FOLLOWS:

SERVICE SIZE:	CONDUIT SIZE:	CONDUCTOR SIZE:	GROUND SIZE:
100A	(1)2"	(4)#3	(1)#8
200A	(1)2.5"	(4)#3/0	(1)#3
400A	(2)2.5"	(4)#3/0 IN EACH	(1)#3 IN EACH

GENERAL NOTES:

1.) MINIMUM EQUIPMENT AIC RATINGS:
240V SERVICE 35,000AIC
480V SERVICE 65,000AIC
EQUIPMENT AIC RATINGS SHOWN TO ESTABLISH MINIMUM ACCEPTABLE RATING. DESIGNER TO COORDINATE REQUIRED AIC RATINGS WITH SITE SPECIFIC ELECTRICAL SERVICE CHARACTERISTICS AND IN NO CASE LOWER THEN ESTABLISHED MINIMUMS.

2.) THIS PLAN DOES NOT INDICATE ALL CONDUIT & WIRE REQUIRED; SEE ADDITIONAL REQUIREMENTS ON ELEMENTARY & PLAN DRAWINGS.

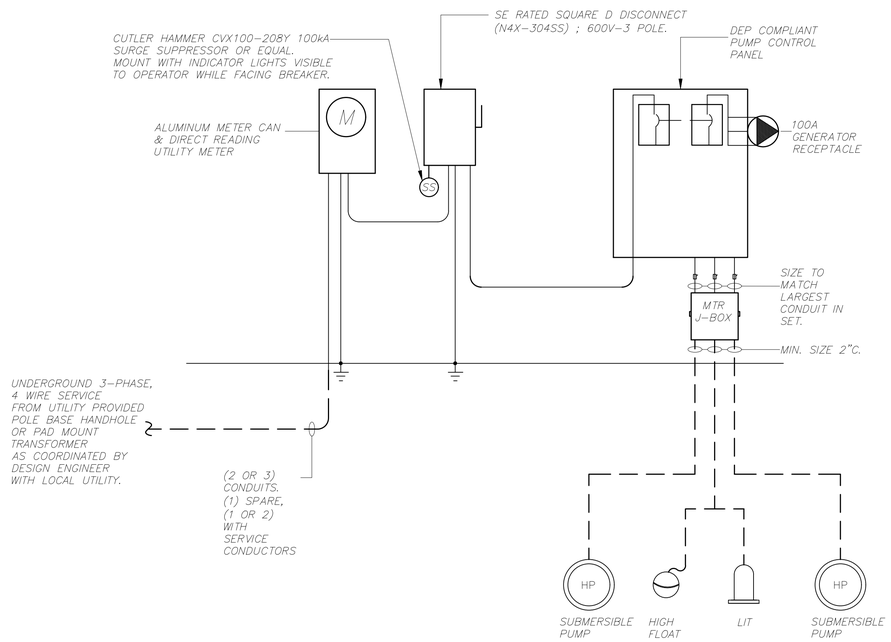

GENERIC SINGLE LINE DRAWING- REVISE ACCORDINGLY TO PROVIDE SITE SPECIFIC DETAILS INCLUDING UTILITY COORDINATION, SERVICE SIZE AND GENERATOR SIZE. SIZE SERVICE, GENERATOR, CONDUIT AND WIRE PER SITE SPECIFIC WELL HORSEPOWER.

ELECTRICAL RISER DIAGRAM (208V 3-PHASE)

N.T.S.

PANEL: LP	BUS: 100A, 60A MCB		VOLTAGE: 120/208V,3P,4W	
MOUNTING: WALL MOUNT	POLES: 18		35,000AIC MIN	
LOCATION: EQUIPMENT RACK			NEMA 4X SS ENCLOSURE	
CIR. NO.	DESCRIPTION	TRIP	POLES	REMARKS
1	DATA COLLECTOR HUB AMI	20	1	
2	SPARE	20	1	
3	SPARE	20	1	
4	SPARE	20	1	
5	SPARE	20	1	
6	SPARE	20	1	
7	SPARE	20	1	
8	SPARE	20	1	
9-17	SPACE	20	1	
10-12	SPACE	20	1	
14,16,18	SURGE SUPPRESSION	30	1	

PROVIDE PANEL WITH 35KAIC RATING.
PROVIDE PANEL WITH EXTERNAL CUTLER HAMMER CVX100 SERIES SPD

PANEL SCHEDULE

N.T.S.

E-5

STANDARD 208V-3Ø (0-30HP) DUPLEX PUMP STATION
ELECTRICAL RISER DIAGRAM

NOTE:
THIS DRAWING IS A LEE COUNTY STANDARD DETAIL AND THEREFORE DOES NOT NEED TO BE SIGNED AND SEALED

LEE COUNTY SOUTHWEST FLORIDA
1500 MONROE STREET

LEE COUNTY UTILITIES ENGINEERING
FORT MYERS, FLORIDA 33901

SHEET TITLE: DUPLEX PUMP STATION ELECTRICAL RISER DIAGRAM

TITLE: STANDARD 208V-30 (0-30HP) DUPLEX PUMP STATION

PROJECT: WASTE WATER DUPLEX, TRIPLEX PUMP STA. MASTER PUMP STATION DESIGN STANDARD

PROJECT NO.:	FILE NAME:	SHEET NUMBER:
208V-30 DPS	Duplex 208 3P	5 OF 10

CONTROL WIRE COLOR CODE:

FUNCTION DESCRIPTION	WIRE COLOR	FUNCTION DESCRIPTION	WIRE COLOR	FUNCTION DESCRIPTION:	WIRE COLOR:	FUNCTION DESCRIPTION:	WIRE COLOR:	FUNCTION DESCRIPTION:	WIRE COLOR:
120VAC FEED	BLACK	H-O-A 1 SCADA	BROWN	PUMP 2 RUN SCADA	ORANGE/BLACK	PUMP 3 FAIL SCADA	BLUE/RED	START PUMP 3	BLACK/BLUE
120VAC LOAD	RED	H-O-A 1 COMMON SCADA	BROWN	PUMP 2 RUN COMMON SCADA	ORANGE/BLACK	PUMP 3 FAIL COMMON SCADA	BLUE/RED	START PUMP 3 COMMON	BLACK/BLUE
120VAC NEUTRAL	WHITE	H-O-A 2 SCADA	RED/BLACK	PUMP 3 RUN SCADA	YELLOW/BLACK	CONTROL POWER FAIL SCADA	YELLOW/RED	ALARM RESET	RED/BLUE
PHASE MONITOR FAIL	BLUE	H-O-A 2 COMMON SCADA	RED/BLACK	PUMP 3 RUN COMMON SCADA	YELLOW/BLACK	CONTROL POWER FAIL SCADA COMMON	YELLOW/RED	ALARM RESET COMMON	RED/BLUE
PHASE MONITOR COMMON	BLUE	H-O-A 3 SCADA	YELLOW	PUMP 1 FAIL SCADA	BROWN/BLACK	START PUMP 1	ORANGE/RED	ALARM LIGHT HORN	ORANGE/BLUE
24VDC POSITIVE (+)	BLUE	H-O-A 3 COMMON SCADA	YELLOW	PUMP 1 FAIL COMMON SCADA	BROWN/BLACK	START PUMP 1 COMMON	ORANGE/RED	ALARM LIGHT HORN COMMON	ORANGE/BLUE
24VDC NEGATIVE (-)	WHITE/BLUE	PUMP 1 RUN SCADA	BLUE/BLACK	PUMP 2 FAIL SCADA	BLACK/RED	START PUMP 2	BROWN/RED	SCADA HIGH LEVEL FLOAT	YELLOW/BLUE
GROUND	GREEN	PUMP 1 RUN COMMON SCADA	BLUE/BLACK	PUMP 2 FAIL COMMON SCADA	BLACK/RED	START PUMP 2 COMMON	BROWN/RED	SCADA HIGH LEVEL FLOAT COMMON	YELLOW/BLUE

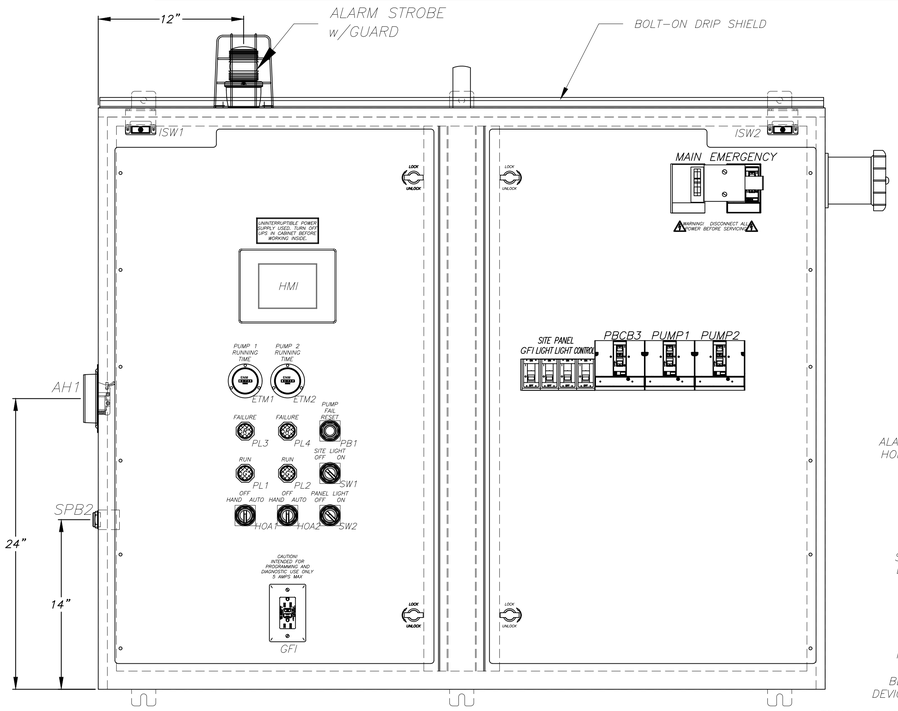

INNER DOOR LAYOUT
(OUTER DOOR REMOVED FOR CLARITY)

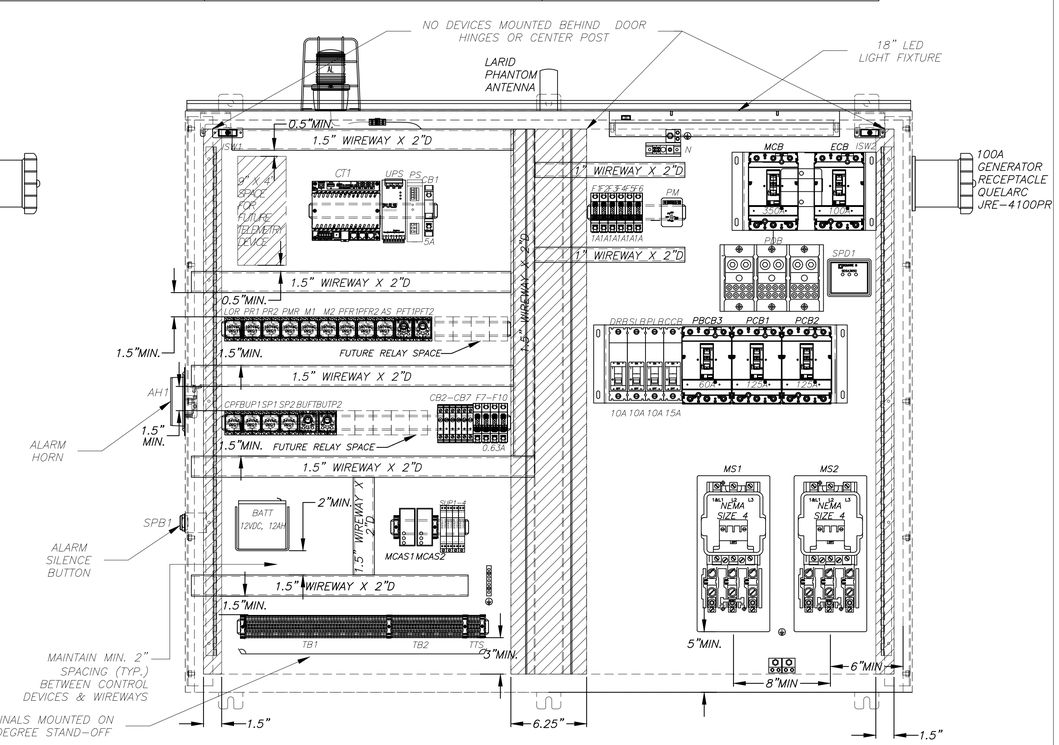

BACK PANEL LAYOUT

ENCLOSURE:
MIN. SPN4DSS-486016 (48"H x 60"W x 16"D) NEMA 4X RATED, WITH BOLT-ON DRIP SHIELD AND REMOVABLE CENTER POST. FABRICATED FROM TYPE 304 STAINLESS STEEL, WITH POLISHED FINISH. OUTER DOORS HAVE 3-POINT PAD-LOCKABLE HANDLES, AND 90° STOPS.

BACK PANEL:
SPPD-6048 (45"H x 57"W) FABRICATED FROM 12ga. CARBON STEEL PAINTED WHITE.

INNER DOOR:
(2) HID-4830 FABRICATED FROM .125 BLACK ENGRAVED ALUMINUM.

NOTES:

1. TERMINAL ON CONTROL CIRCUIT TERMINAL STRIP
2. TERMINAL ON POWER DISTRIBUTION BLOCK
3. NEUTRAL AND GROUND LUGS
4. FIELD WIRING (EXTERNAL TO CONTROL PANEL)
5. PANEL WIRING
6. SEAL ALL CONDUITS ENTERING CONTROL PANEL
7. CONTROL PANEL IS UL508A LABELED
8. INSTALL IN ACCORDANCE WITH ARTICLE 504 OF THE N.E.C.
9. MINIMUM #14 AWG WIRE AT 600V
10. MAINTAIN MIN. 2" SPACE BETWEEN CONTROL DEVICES & WIREWAYS
11. MAINTAIN MAX. 6" EXTRA LENGTH ON CONTROL WIRES

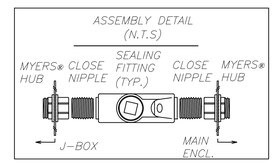

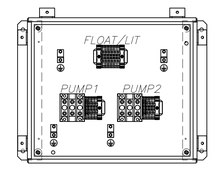

JUNCTION BOX LAYOUT
(OUTER DOOR REMOVED FOR CLARITY)

JUNCTION BOX ENCLOSURE:
SPJH4SS-14128 (14"H x 12"W x 8"D) NEMA 4X RATED, JIC TYPE.
FABRICATED FROM TYPE 304 STAINLESS STEEL, POLISHED FINISH. OUTER DOOR HAS JIC CLAMPS.

BACK PANEL:
SPPJ-1412 (12.88"H x 10.88"W)
FABRICATED FROM 12ga. CARBON STEEL PAINTED WHITE.

E-6

STANDARD 208V-3Ø (0-30HP) DUPLEX PUMP
STATION CONTROL PANEL ELEVATION

NOTE:
THIS DRAWING IS A LEE COUNTY STANDARD DETAIL AND THEREFORE DOES NOT NEED TO BE SIGNED AND SEALED

LEE COUNTY SOUTHWEST FLORIDA
1500 MONROE STREET

LEE COUNTY UTILITIES ENGINEERING
FORT MYERS, FLORIDA 33901

SHEET TITLE: DUPLEX PUMP STATION CONTROL PANEL ELEVATION

TITLE: STANDARD 208V-30 (0-30HP) DUPLEX PUMP STATION

PROJECT: WASTE WATER DUPLEX, TRIPLEX PUMP STA. MASTER PUMP STATION DESIGN STANDARD

PROJECT NO.:	FILE NAME:	SHEET NUMBER:
208V-30 DPS	Duplex 208 3P	6 OF 10

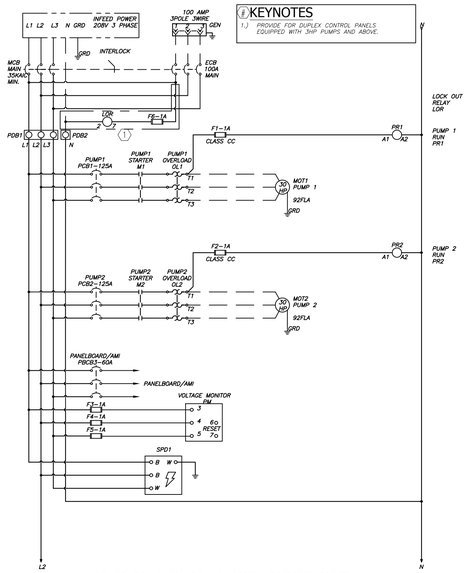

STANDARD 208V-3Ø (0-30HP) DUPLEX PUMP
STATION CONTROL PANEL ELEMENTARY

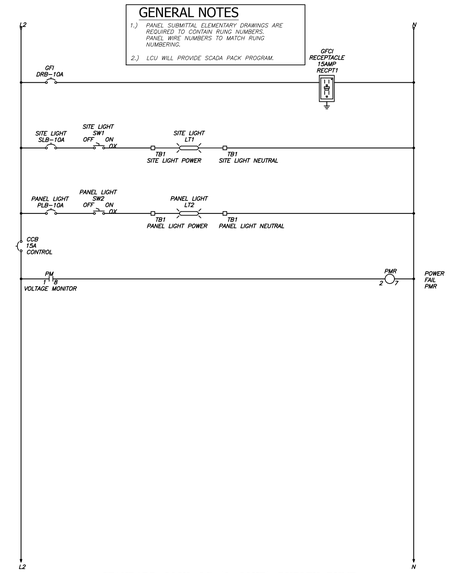

STANDARD 208V-3Ø (0-30HP) DUPLEX PUMP
STATION CONTROL PANEL ELEMENTARY

E-7

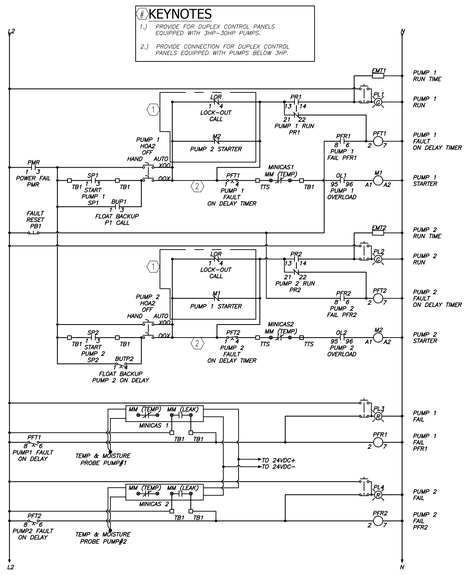

STANDARD 208V-3Ø (0-30HP) DUPLEX PUMP
STATION CONTROL PANEL ELEMENTARY

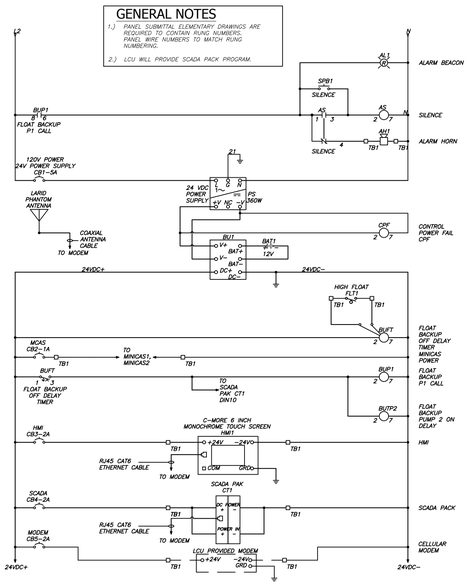

STANDARD 208V-3Ø (0-30HP) DUPLEX PUMP
STATION CONTROL PANEL ELEMENTARY

E-8

NOTE:
THIS DRAWING IS A LEE COUNTY STANDARD DETAIL AND THEREFORE DOES NOT NEED TO BE SIGNED AND SEALED

LEE COUNTY SOUTHWEST FLORIDA
1500 MONROE STREET

LEE COUNTY UTILITIES ENGINEERING
FORT MYERS, FLORIDA 33901

SHEET TITLE: DUPLEX PUMP STATION ELECTRICAL DIAGRAMS

TITLE: STANDARD 208V-30 (0-30HP) DUPLEX PUMP STATION

PROJECT: WASTE WATER DUPLEX, TRIPLEX PUMP STA. MASTER PUMP STATION DESIGN STANDARD

PROJECT NO.:	FILE NAME:	SHEET NUMBER:
208V-30 DPS	Duplex 208 3P	7 OF 10

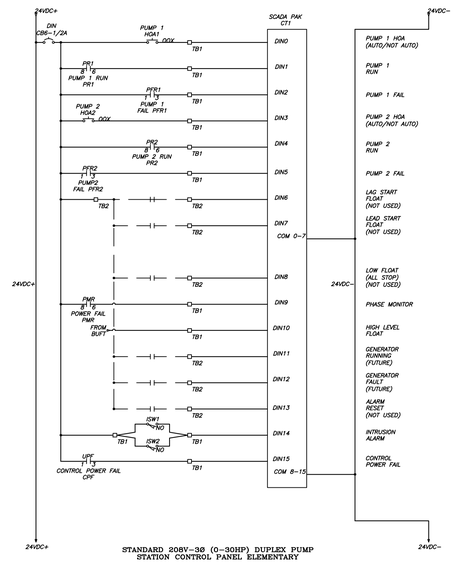

STANDARD 208V-30 (0-30HP) DUPLEX PUMP
STATION CONTROL PANEL ELEMENTARY

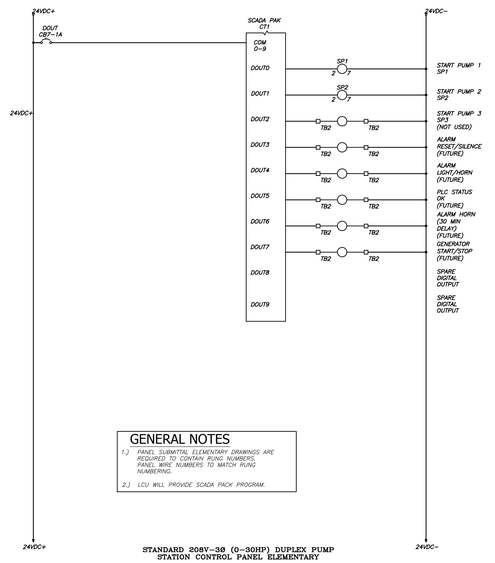

GENERAL NOTES

1.) PANEL SUBMITTAL ELEMENTARY DRAWINGS ARE REQUIRED TO CONTAIN RUNG NUMBERS. PANEL WIRE NUMBERS TO MATCH RUNG NUMBERING.

2.) LCU WILL PROVIDE SCADA PACK PROGRAM.

STANDARD 208V-30 (0-30HP) DUPLEX PUMP
STATION CONTROL PANEL ELEMENTARY

E-9

GENERAL NOTES

1.) PANEL SUBMITTAL ELEMENTARY DRAWINGS ARE REQUIRED TO CONTAIN RUNG NUMBERS. PANEL WIRE NUMBERS TO MATCH RUNG NUMBERING.

2.) LCU WILL PROVIDE SCADA PACK PROGRAM.

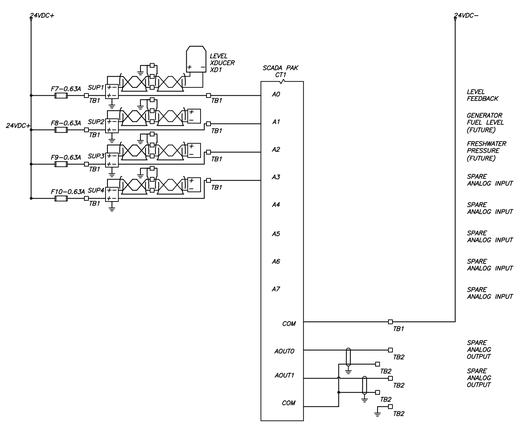

STANDARD 208V-30 (0-30HP) DUPLEX PUMP
STATION CONTROL PANEL ELEMENTARY

E-10

GENERAL NOTES

1.) ALL CONNECTORS TO BE WRAPPED WITH MASTIC AND TAPE.

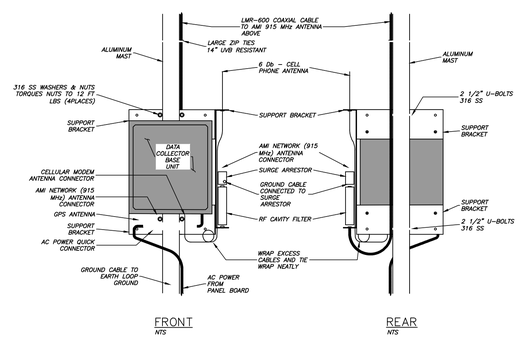

STANDARD 208V-30 (0-30HP) DUPLEX PUMP STATION
DATA COLLECTOR INSTALLATION DETAIL "A"

E-11

NOTE:
THIS DRAWING IS A LEE COUNTY STANDARD DETAIL AND THEREFORE DOES NOT NEED TO BE SIGNED AND SEALED

LEE COUNTY SOUTHWEST FLORIDA 1500 MONROE STREET	LEE COUNTY UTILITIES ENGINEERING FORT MYERS, FLORIDA 33901
SHEET TITLE:	DUPLEX PUMP STATION ELEVATION & ELECTRICAL DIAGRAMS
TITLE:	STANDARD 208V-30 (0-30HP) DUPLEX PUMP STATION
PROJECT:	WASTE WATER DUPLEX, TRIPLEX PUMP STA. MASTER PUMP STATION DESIGN STANDARD
PROJECT NO.: 208V-30 DPS	FILE NAME: Duplex 208 3P
SHEET NUMBER:	8 OF 10

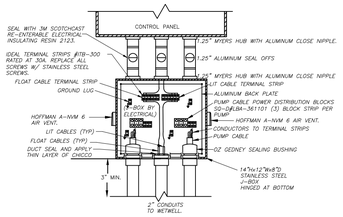

DUPLEX JUNCTION BOX
N.T.S.

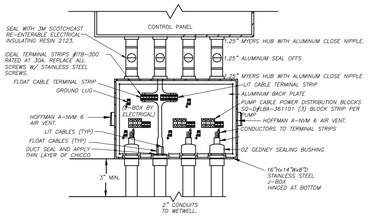

TRIPLEX JUNCTION BOX
N.T.S.

JUNCTION BOX & TERMINAL STRIP INSTALLATION AT CONTROL PANEL LOCATION

ES-1

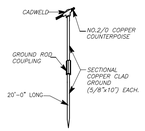

TYPICAL GROUND ROD CONNECTION DETAIL
N.T.S

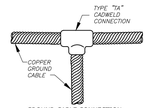

GROUND CABLE CONNECTION
N.T.S

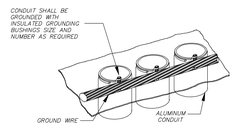

PANEL CONDUIT GROUNDING DETAIL
N.T.S

GROUNDING DETAILS

ES-2

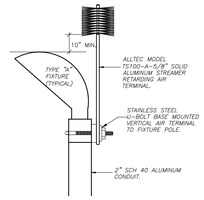

STREAMER RETARDING AIR TERMINAL FIXTURE POLE MOUNTED

ES-3

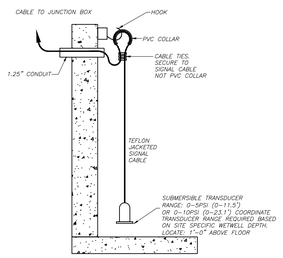

LEVEL TRANSMITTER DETAIL

ES-4

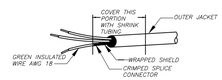

DIGITAL SIGNAL CABLE STRIPPING

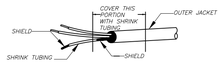

ANALOG SIGNAL CABLE STRIPPING

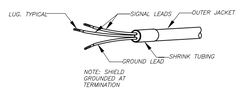

SIGNAL CABLE SHRINK TUBING

TERMINATION OF SHIELDED INSTRUMENT CONTROL CABLE DETAIL

ES-5

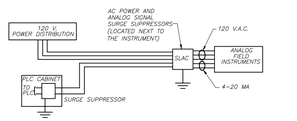

4-WIRE FIELD TRANSMITTERS
N.T.S.

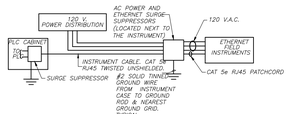

ETHERNET FIELD TRANSMITTERS
N.T.S.

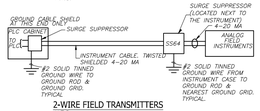

2-WIRE FIELD TRANSMITTERS
N.T.S.

DISCRETE PLC/INPUT CIRCUIT
N.T.S.

DISCRETE PLC/OUTPUT CIRCUIT
N.T.S.

INSTRUMENTATION GROUNDING & SURGE PROTECTION DETAIL

ES-6

NOTE:
THIS DRAWING IS A LEE COUNTY STANDARD DETAIL AND THEREFORE DOES NOT NEED TO BE SIGNED AND SEALED

LEE COUNTY SOUTHWEST FLORIDA 1500 MONROE STREET	LEE COUNTY UTILITIES ENGINEERING FORT MYERS, FLORIDA 33901
SHEET TITLE:	DUPLEX PUMP STATION TYPICAL DETAILS
TITLE:	STANDARD 208V-30 (0-30HP) DUPLEX PUMP STATION
PROJECT:	WASTE WATER DUPLEX, TRIPLEX PUMP STA. MASTER PUMP STATION DESIGN STANDARD

PROJECT NO.:	FILE NAME:	SHEET NUMBER:
208V-30 DPS	Duplex 208 3P	9 OF 10

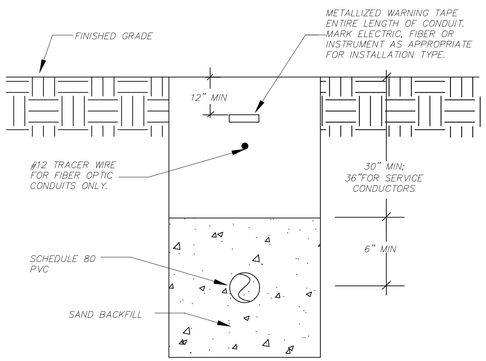

UNDERGROUND CONDUIT INSTALLATION DETAIL

ES-7

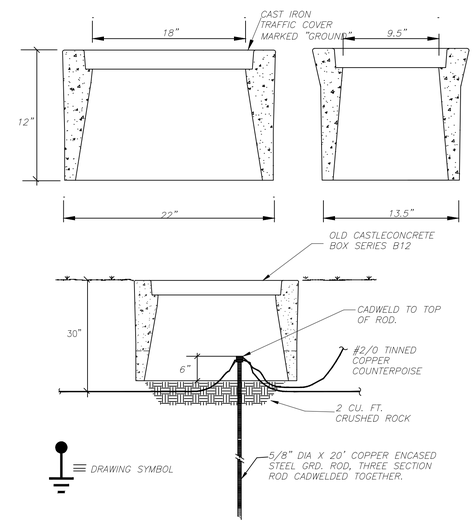

GROUND ROD INSTALLATION DETAIL

ES-8

NOTE:
THIS DRAWING IS A LEE COUNTY STANDARD DETAIL AND THEREFORE DOES NOT NEED TO BE SIGNED AND SEALED

LEE COUNTY SOUTHWEST FLORIDA
1500 MONROE STREET

LEE COUNTY UTILITIES ENGINEERING
FORT MYERS, FLORIDA 33901

SHEET TITLE: DUPLEX PUMP STATION TYPICAL DETAILS

TITLE: STANDARD 208V-30 (0-30HP) DUPLEX PUMP STATION

PROJECT: WASTE WATER DUPLEX, TRIPLEX PUMP STA. MASTER PUMP STATION DESIGN STANDARD

PROJECT NO.:	FILE NAME:	SHEET NUMBER:
208V-30 DPS	Duplex 208 3P	10 OF 10