LEE COUNTY
DEPARTMENT OF TRANSPORTATION

MIDPOINT BRIDGE (No. 124096)
BRIDGE REPAIRS

LEE COUNTY PROJECT NO. CN200224JJB

STRUCTURE PLANS

INDEX OF STRUCTURE PLANS

SHEET NO.	SHEET DESCRIPTION
1	KEY SHEET
2	SIGNATURE SHEET
3	GENERAL NOTES
4	PLAN AND ELEVATION WITH OVERVIEW OF REPAIRS
5	TRAFFIC CONTROL PLAN NOTES
6	TRAFFIC CONTROL PLAN / CONSTRUCTION PHASING
7	REPAIR TYPE 1 DETAILS
8 - 9	REPAIR TYPE 2 DETAILS
~~10 - 12~~	~~REPAIR TYPE 3 DETAILS~~ 1
13	REPAIR TYPE 4 DETAILS
14	REPAIR TYPE 5 DETAILS
15	REPAIR TYPE 6 DETAILS
BX1-1 THRU BX1-156	EXISTING STRUCTURES PLANS
LX-1 THRU LX-8	EXISTING LIGHTING PLANS

STANDARD PLANS FOR BRIDGE CONSTRUCTION

102-600	GENERAL INFORMATION FOR TRAFFIC CONTROL THROUGH WORK ZONES
102-613	MULTILANE ROADWAY, LANE CLOSURES
102-620	MULTILANE ROADWAY, TEMPORARY DIVERSIONS
415-001	BAR BENDING DETAILS (STEEL)
676-010	CABLE INSTALLATION DETAILS

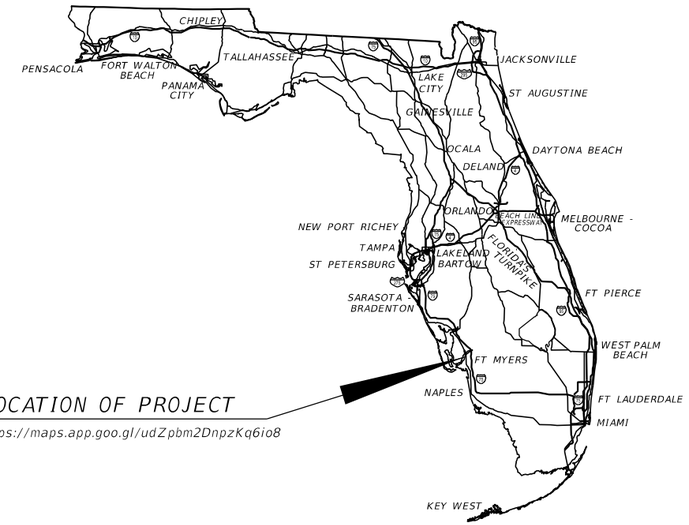

LOCATION OF PROJECT

https://maps.app.goo.gl/udZpbm2DnpzKq6io8

LOCATION OF PROJECT
BRIDGE NO. 124096

GOVERNING DESIGN STANDARDS:

Florida Department of Transportation, FY 2024-25 Standard Plans for Road and Bridge Construction and applicable Interim Revisions (IRs).

Standard Plans for Road Construction and associated IRs are available at the following website: http://www.fdot.gov/design/standardplans

GOVERNING STANDARD SPECIFICATIONS:

Florida Department of Transportation, FY 2024-25 Standard Specifications for Road and Bridge Construction at the following website: http://www.fdot.gov/programmanagement/Implemented/SpecBooks

REVISIONS:

1. Structure Sheets 1, 2, 3, 4, 10, 11, and 12 (Revised 10-25-2024) (NIC)
2. Revised Sheet Nos. 5, 8, 13, and 14 (Revised 2-7-25)
2. Revised Sheet Nos. 3 and 14 (Revised 2-12-25)

KEY SHEET REVISIONS	
DATE	DESCRIPTION
10-25-24	Deleted Sheet No. 10, 11, and 12. (NIC)

STRUCTURE PLANS ENGINEER OF RECORD:

THOMAS M. WAITS, P.E.
P.E. LICENSE NUMBER 55460
HIGHSPANS ENGINEERING, INC.
2121 MCGREGOR BLVD.
SUITE 200
FORT MYERS, FL 33901
REGISTRY NO. 27559

LEE COUNTY PROJECT MANAGER:

AVELINO CANCEL, P.E.

FINAL SUBMITTAL
OCTOBER 2024

LEE COUNTY PROJECT NO.	FISCAL YEAR	SHEET NO.
CN200224JJB	24	1

THE OFFICIAL RECORD OF THIS SHEET IS THE ELECTRONIC FILE DIGITALLY SIGNED AND SEALED UNDER RULE 61G15-23.004, F.A.C.

2/12/2025 7:22:25 AM Sabrina
H:_Project23\2301_EsteroParkwayOverI-75\Structures\BIKeySheet01.dgn

THOMAS M. WAITS
LICENSE
No 55460
STATE OF
FLORIDA
PROFESSIONAL ENGINEER

THIS ITEM HAS BEEN DIGITALLY SIGNED AND SEALED BY

Thomas M Waits

This document has been digitally signed and sealed by Thomas M. Waits, PE, using an SHA-1 authentication code on the date below. Printed copies of this document are not considered signed and sealed and all SHA-1 authentication codes must be verified on any electronic copies.
2025.02.14 08:33:21-05'00'

ON THE DATE ADJACENT TO THE SEAL

PRINTED COPIES OF THIS DOCUMENT ARE NOT CONSIDERED SIGNED AND SEALED AND THE SIGNATURE MUST BE VERIFIED ON ANY ELECTRONIC COPIES.

THE ABOVE NAMED PROFESSIONAL ENGINEER SHALL BE RESPONSIBLE FOR THE FOLLOWING SHEETS IN ACCORDANCE WITH RULE 61G15-23.004, F.A.C.

SHEET NO.	SHEET DESCRIPTION
1	KEY SHEET
2	SIGNATURE SHEET
3	GENERAL NOTES
4	PLAN AND ELEVATION WITH OVERVIEW OF REPAIRS
7	REPAIR TYPE 1 DETAILS
8 - 9	REPAIR TYPE 2 DETAILS
1 ~~12~~	~~REPAIR TYPE 3 DETAILS (3 OF 3)~~
13	REPAIR TYPE 4 DETAILS
14	REPAIR TYPE 5 DETAILS
15	REPAIR TYPE 6 DETAILS

ELI S. ENDERS
LICENSE
No 86646
STATE OF
FLORIDA
PROFESSIONAL ENGINEER

THIS ITEM HAS BEEN DIGITALLY SIGNED AND SEALED BY

This document has been digitally signed and sealed by Eli Enders, PE, using an SHA-1 authentication code on the date below. Printed copies of this document are not considered signed and sealed and all SHA-1 authentication codes must be verified on any electronic copies. Printed copies of this document are not considered signed and sealed and all SHA-1 authentication codes must be verified on any electronic copies.
2025.02.13 15:40:16 -05'00'

ON THE DATE ADJACENT TO THE SEAL

PRINTED COPIES OF THIS DOCUMENT ARE NOT CONSIDERED SIGNED AND SEALED AND THE SIGNATURE MUST BE VERIFIED ON ANY ELECTRONIC COPIES.

THE ABOVE NAMED PROFESSIONAL ENGINEER SHALL BE RESPONSIBLE FOR THE FOLLOWING SHEETS IN ACCORDANCE WITH RULE 61G15-23.004, F.A.C.

SHEET NO.	SHEET DESCRIPTION
2	SIGNATURE SHEET
5	TRAFFIC CONTROL PLAN NOTES
6	TRAFFIC CONTROL PLAN / CONSTRUCTION PHASING
1 ~~10~~	~~REPAIR TYPE 3 DETAILS (1 OF 3)~~
~~11~~	~~REPAIR TYPE 3 DETAILS (2 OF 3)~~

BRIDGE NO. 124096

REVISIONS

DATE	BY	DESCRIPTION	DATE	BY	DESCRIPTION
10-25-24	SDS	1 DELETED SHEETS (NIC)			

HIGHSPANS ENGINEERING, INC.
2121 MCGREGOR BOULEVARD
SUITE 200
FORT MYERS, FL 33901

DRAWN BY: JAH 4/24
CHECKED BY: TMW 4/24
DESIGNED BY: JAH 4/24
CHECKED BY: TMW 4/24

LEE COUNTY
DEPARTMENT OF TRANSPORTATION

ROAD NO.	COUNTY	COUNTY PROJECT NO.
	LEE	CN200224JJB

SHEET TITLE: SIGNATURE SHEET

PROJECT NAME: MIDPOINT BRIDGE REPAIRS

REF. DWG. NO.

SHEET NO. 2

2/12/2025 7:22:29 AM
H:_Project24\2404_MidpointBridge-MSEWallRepairs\Structures\SIGNST01.dgn

GENERAL NOTES

A. DESIGN SPECIFICATIONS
1. FDOT STRUCTURES MANUAL DATED JANUARY 2024 AND SUBSEQUENT STRUCTURES DESIGN BULLETINS.
2. AMERICAN ASSOCIATION OF STATE HIGHWAY AND TRANSPORTATION OFFICIALS (AASHTO) LOAD AND RESISTANCE FACTOR (LRFD) BRIDGE DESIGN SPECIFICATIONS, 9TH EDITION AND ALL SUBSEQUENT INTERIMS.
3. FDOT DESIGN MANUAL DATED JANUARY, 2024 AND SUBSEQUENT ROADWAY DESIGN BULLETINS.

B. GOVERNING STANDARDS AND CONSTRUCTION SPECIFICATIONS
1. FLORIDA DEPARTMENT OF TRANSPORTATION, FY2024-25 STANDARD PLANS AND REVISED INDEX DRAWINGS AS APPENDED HEREIN, AND FY2024-25 STANDARD SPECIFICATIONS FOR ROAD AND BRIDGE CONSTRUCTION, AS AMENDED BY CONTRACT DOCUMENTS.

C. VERTICAL DATUM
NORTH AMERICAN VERTICAL DATUM OF 1988 (NAVD 88)

D. ENVIRONMENT

BRIDGE NUMBER	SUPERSTRUCTURE	SUBSTRUCTURE
124096	SLIGHTLY	EXTREMELY

* BASED ON 1993 VECP DESIGN PLANS

E. DESIGN METHODOLOGY
LOAD AND RESISTANCE FACTOR DESIGN (LRFD) METHOD USING STRENGTH, SERVICE, AND FATIGUE LIMIT STATES.

F. DESIGN LOADINGS
1. LIVE LOADS: HL-93 WITH DYNAMIC LOAD ALLOWANCE
2. DEAD LOADS:
REINFORCED CONCRETE: 150 PCF

G. STRUCTURE MATERIALS
1. REINFORCING STEEL: GRADE 60 CARBON STEEL PER SPECIFICATIONS SECTION 931.
2. CONCRETE: CONCRETE SHALL BE IN ACCORDANCE WITH SPECIFICATIONS SECTION 346 AND 347, AS APPLICABLE.

CONCRETE CLASS	MIN. 28-DAY COMPRESSIVE STRENGTH (PSI)	LOCATION OF CONCRETE IN STRUCTURE
II	3,400	LOAD CENTER FOUNDATION, CONCRETE TRAFFIC RAILING REPAIR
IV	5,500	C.I.P. SUBSTRUCTURE
NS	2,500	WALL FOUNDATION REPAIR

H. REPAIR MATERIALS
FOR REPAIR PRODUCTS DESIGNATED AS APL, SEE THE FDOT APPROVED PRODUCTS LIST FOR ALL PRODUCTS THAT HAVE BEEN APPROVED BY THE FLORIDA DEPARTMENT OF TRANSPORTATION.
1. EPOXY COMPOUND:

EPOXY TYPE	FDOT STANDARD SPECIFICATIONS SECTION	LOCATION OF EPOXY REPAIR IN STRUCTURE
E	411, 926	CRACK INJECTION
AB	926	BONDING CONCRETE
F-1	926	SPALL REPAIR

2. ASPHALT PAVEMENT: FDOT STANDARD SPECIFICATIONS SECTION 330, AND 337.
3. PENETRANT SEALER: FDOT STANDARD SPECIFICATIONS SECTION 413.
4. APPROACH REPAIR CONCRETE: FDOT STANDARD SPECIFICATIONS SECTION 930. MUST BE FOR HORIZONTAL SURFACES AND RAPID HARDENING PER 930-4.2.1 AND LISTED ON THE APL.

I. CONCRETE FINISH COATING
CONCRETE REPAIRS ARE TO BE TEXTURED AND PAINTED TO MATCH EXISTING CONDITIONS. REPAIR CONCRETE IS TO BE FINISHED FLUSH WITH EXISTING CONCRETE, AND ANY EDGES OR CORNERS SHALL RECEIVE A 3/4" CHAMFER.

J. PLAN DIMENSIONS
ALL DIMENSIONS IN THESE PLANS ARE MEASURED IN FEET EITHER HORIZONTALLY OR VERTICALLY UNLESS OTHERWISE NOTED.

K. UTILITIES
1. THE CONTRACTOR SHALL CALL IN LOCATES AND TAKE CARE TO PREVENT DAMAGING BURIED UTILITIES DURING BEDDING STONE INSTALLATION.
2. ALL UTILITIES INDICATED ARE APPROXIMATE AND SUBJECT TO FIELD VERIFICATION. THE CONTRACTOR SHALL VERIFY THEIR LOCATION PRIOR TO THE START OF WORK.

GENERAL NOTES (CONT.)

L. TRAFFIC CONTROL PLANS
SEE TRAFFIC CONTROL PLAN SHEETS.

M. PHASING OF WORK
1. REPAIR ITEMS 3 AND 6 REQUIRE PHASING TO MAINTAIN TRAFFIC ON THE BRIDGE. SEE TRAFFIC CONTROL PLAN FOR REQUIRED PHASING.

N. DEMOLITION
1. CONTRACTOR SHALL BE RESPONSIBLE FOR DEMOLITION, REMOVAL, AND DISPOSAL OF ALL CONSTRUCTION DEBRIS ASSOCIATED WITH ALL REPAIR ITEMS IN ACCORDANCE WITH LEE COUNTY REQUIREMENTS.

O. CONTROL OF DEMOLITION DEBRIS
1. SEVERAL WORK ITEMS REQUIRE CLEANING WHICH GENERATE DEBRIS WHICH NEEDS TO BE CONTAINED AND DISPOSED OF IN ACCORDANCE WITH ALL FEDERAL, STATE, AND LOCAL REGULATIONS. ABSOLUTELY NO DEBRIS (SOLID OR LIQUID) SHALL BE ALLOWED TO FALL OUTSIDE OF CONTAINMENT. ISOLATE THE WORK AREAS WITH CONTAINMENT DEVICES, CANVASSES, TARPAULINS OR SCREENS DURING ALL CONCRETE REMOVAL AND SURFACE PREPARATION OPERATIONS.

P. SODDING
1. SOD QUANTITY INCLUDES ONLY THOSE AREAS INTENDED TO BE DISTURBED BY PROPOSED IMPROVEMENTS. OTHER DISTURBED AREAS NOT INTENDED TO BE DISTURBED, INCLUDING BUT NOT LIMITED TO STAGING AREAS, STOCKPILE AREAS, ETC., SHALL BE SODDED AT NO ADDITIONAL COST.
2. SOD TO BE SET TO NO MORE THAN 1/2" BELOW FINISHED GRADE AND SHALL MATCH EXISTING SOD TYPE. ALL PROPOSED GRADES ARE FINISHED AND SODDED GRADES.

Q. CONSTRUCTION
1. THE CONTRACTOR IS RESPONSIBLE FOR ALL COORDINATION WITH LEE COUNTY DOT AS NECESSARY DURING CONSTRUCTION.
2. THE CONTRACTOR IS RESPONSIBLE FOR OBTAINING NECESSARY PERMITS FOR CONSTRUCTION. WORK SHALL NOT BEGIN UNTIL ALL NECESSARY PERMITS ARE OBTAINED.

2

3. THE CONTRACTOR MUST COORDINATE WITH THE LEE COUNTY TRAFFIC DIVISION BEFORE STARTING ANY WORK ON THE LOAD CENTER.

R. PAY ITEM NOTES
1. THE COST OF MAINTENANCE OF TRAFFIC SHALL INCLUDE ALL ITEMS REQUIRED TO SAFELY MAINTAIN TRAFFIC THROUGHOUT THE WORK ZONE, INCLUDING ALL TEMPORARY PAVEMENT MARKINGS, TEMPORARY TRAFFIC SIGNALS, SHIELDING OF DROP OFF HAZARDS, AND CHANNELIZING DEVICES.
2. THE COST OF DEBRIS CONTAINMENT SYSTEM SHALL INCLUDE ALL ITEMS REQUIRED TO ISOLATE THE WORK AREAS WITH CONTAINMENT DEVICES TO PREVENT ALL FALLING AND AIRBORNE DEBRIS FROM FALLING OUTSIDE OF CONTAINMENT. INCLUDES SUBMITTING A CONTAINMENT SYSTEM PLAN AND DRAWINGS TO THE ENGINEER FOR APPROVAL.
3. THE COST OF EXPANSION JOINT REPLACEMENT INCLUDES THE FOLLOWING:
   a. ANY WORK TO REPLACE ANY REJECTED JOINTS.
   b. ANY REPAIRS TO THE GALVANIZING ON METALLIC JOINT COMPONENTS.
   c. ANY ADDITIONAL WORK OR MATERIALS REQUIRED FOR NON-STANDARDIZED OR SPECIAL CONSTRUCTION OR INSTALLATION TECHNIQUES.
   d. ALL COSTS ASSOCIATED WITH THE MANUFACTURER'S INSTALLATION TECHNICIAN.
   e. ALL WORK RELATED TO PERFORMANCE OF THE WATERTIGHT INTEGRITY TEST AND ANY NECESSARY REPAIRS AND RETESTING.
4. THE LOAD CENTER FURNISH AND INSTALL PAY ITEM SHALL INCLUDE LABOR AND MATERIALS REQUIRED TO INSTALL REPLACEMENT LOAD CENTER. ASSOCIATED SELECT BEDDING MATERIAL, CONCRETE, REINFORCING, AND HARDWARE ARE INCIDENTAL TO THIS PAY ITEM.

1

~~S. SURVEY~~
~~1. CONTRACTOR SHALL HAVE SURVEY BENCHMARKS ESTABLISHED AT THE MSE WALLS BY A SURVEYOR LICENSED IN THE STATE OF FLORIDA. BENCHMARKS SHALL BE ESTABLISHED ALONG THE WALL AT THE EXISTING GROUND SURFACE AND AT THE TOP OF THE MSE WALL COPING/BARRIER. BENCHMARK INFORMATION AND ELEVATIONS SHALL BE SUBMITTED TO LEE COUNTY FOR RECORDS.~~
~~2. IT IS RECOMMENDED THAT LEE COUNTY MONITOR FOR SETTLEMENT AT THE SURVEY BENCHMARKS AFTER EVERY HURRICANE AT THE SITE OF CATEGORY 3 OR HIGHER.~~
~~3. SURVEY FROM 6/4/2024 IS INCLUDED IN THE BID PACKAGE FOR INFORMATION PURPOSES ONLY. ELEVATIONS MAY HAVE BEEN ALTERED SINCE SURVEY. THE CONTRACTOR SHALL VERIFY EXISTING ELEVATIONS AND SHALL WORK THE VERIFIED ELEVATIONS WITH MILLING AND SURFACING PLAN AND APPROACH SLAB REMOVAL PLAN SPECIFIED HEREIN FOR REPAIR TYPE 3.~~

T. CONTRACT
ALL ITEMS CROSSED OUT IN THIS REVISED PLAN SET ARE NOT TO BE INCLUDED IN THIS CONTRACT AND SHALL BE COMPLETED AT A LATER DATE BY OTHERS. OUT OF CONTRACT NOTES AND REPAIR ITEMS SHALL HEREIN BE NOTED AS "NIC" WHICH SHALL STAND FOR "NOT IN THE CONTRACT".

BRIDGE NO. 124096

REVISIONS

DATE	BY	DESCRIPTION	DATE	BY	DESCRIPTION
10-25-24	SDS	1 DELETED NOTE S, ADDED NOTE T (NIC)			
2-12-25	SDS	2 ADDED NOTE			

THOMAS M. WAITS, P.E.
P.E. LICENSE NUMBER 55460
HIGHSPANS ENGINEERING, INC.
2121 MCGREGOR BOULEVARD
SUITE 200
FORT MYERS, FL 33901

DRAWN BY: JAH 4/24
CHECKED BY: TMW 4/24
DESIGNED BY: JAH 4/24
CHECKED BY: TMW 4/24

LEE COUNTY
DEPARTMENT OF TRANSPORTATION

ROAD NO.	COUNTY	COUNTY PROJECT NO.
	LEE	CN200224JJB

SHEET TITLE: GENERAL NOTES
PROJECT NAME: MIDPOINT BRIDGE REPAIRS
REF. DWG. NO.
SHEET NO. 3

THE OFFICIAL RECORD OF THIS SHEET IS THE ELECTRONIC FILE DIGITALLY SIGNED AND SEALED UNDER RULE 61G15-23.004, F.A.C.

2/12/2025 7:22:30 AM
H:_Project24\2404_MidpointBridge-MSEWallRepairs\Structures\GeneralNotes.dgn

	B-DECK-1		B-GROUND-1
BOR#	B-DECK-1	BOR#	B-GROUND-1
EASTING	684768	EASTING	684800
NORTHING	826663	NORTHING	826742
ELEV.	20.0	ELEV.	7.0
DATE	6/10/2024	DATE	6/27/2024
DRILLER	A. JACKSON	DRILLER	J. SHAW
HAMMER	AUTOMATIC	HAMMER	AUTOMATIC
RIG	D-25	RIG	D-25

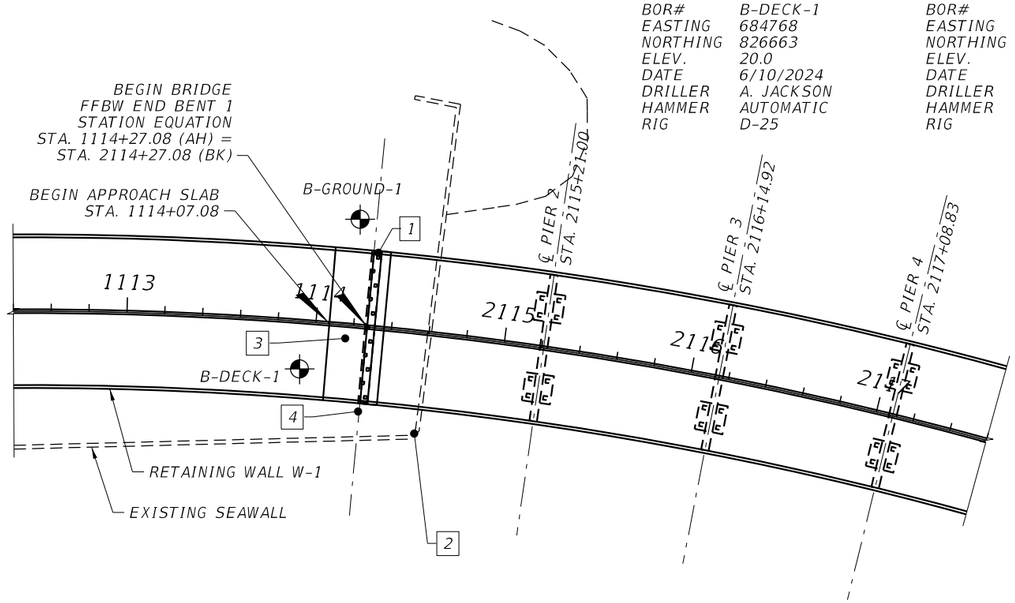

BEGIN PLAN

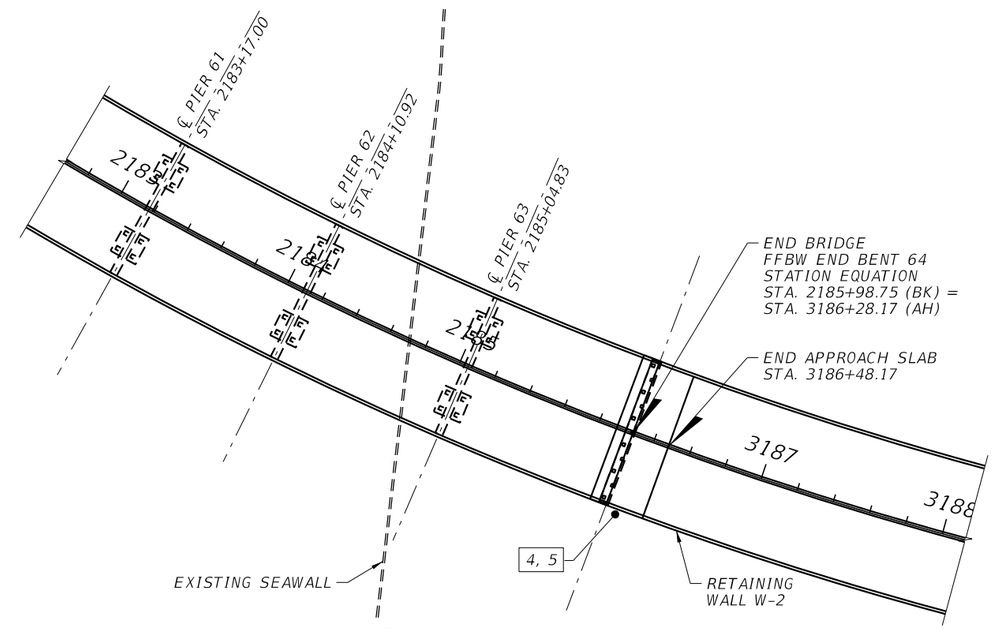

END PLAN

LEGEND

APPROXIMATE SPT BORING LOCATION

TYPICAL REPAIR LOCATION

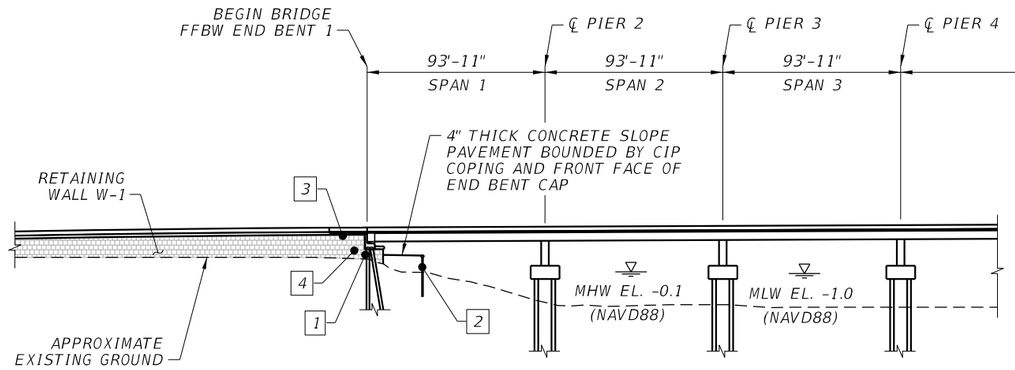

BEGIN ELEVATION

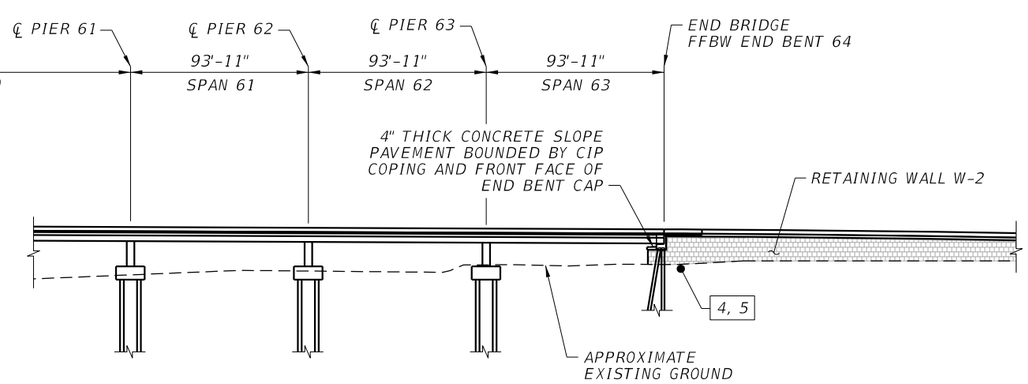

END ELEVATION

REPAIR TYPE	DESCRIPTION OF TYPICAL DAMAGED AREA	SUMMARY OF REPAIR PROCEDURE
1	SOIL EXFILTRATION BELOW WEST END BENT	REMOVE CHEEKWALL, INSTALL FLOWABLE FILL, AND RECAST CHEEKWALL
2	BRIDGE COMPONENT CONCRETE CRACKING AND SPALLING	REMOVE UNSOUND CONCRETE, EPOXY INJECT CRACKS, AND REPAIR SPALLS
1 ~~3~~	~~SETTLEMENT OF WESTERN APPROACH~~	~~ASPHALT PAVING, APPROACH SLAB REPAIR, TRAFFIC RAILING REPAIR, AND ESTABLISH BENCHMARKS~~
4	UNDERMINING AND EROSION OF MSE WALLS AND CONCRETE APRON	FILL VOIDS WITH CONCRETE AND ARMOR SPECIFIED AREAS WITH RIPRAP
5	SETTLEMENT OF LIGHTING LOAD CENTER FOUNDATION	REMOVE AND REPLACE LOAD CENTER INCLUDING FOUNDATIONS
6	DETERIORATION OF EXPANSION JOINT NEOPRENE SEALS	REMOVE AND REPLACE EXPANSION JOINT NEOPRENE SEALS ON SPECIFIED STRIP SEALS AND MODULAR JOINTS

BRIDGE NO. 124096

REVISIONS

DATE	BY	DESCRIPTION	DATE	BY	DESCRIPTION
10-25-24	SDS	1 DELETED REPAIR TYPE 3 (NIC)			

THOMAS M. WAITS, P.E.
P.E. LICENSE NUMBER 55460
HIGHSPANS ENGINEERING, INC.
2121 MCGREGOR BOULEVARD
SUITE 200
FORT MYERS, FL 33901

DRAWN BY: JAH 4/24
CHECKED BY: TMW 4/24
DESIGNED BY: JAH 4/24
CHECKED BY: TMW 4/24

LEE COUNTY
DEPARTMENT OF TRANSPORTATION

ROAD NO.	COUNTY	COUNTY PROJECT NO.
	LEE	CN200224JJB

SHEET TITLE: PLAN AND ELEVATION WITH OVERVIEW OF REPAIRS

PROJECT NAME: MIDPOINT BRIDGE REPAIRS

REF. DWG. NO.

SHEET NO. 4

THE OFFICIAL RECORD OF THIS SHEET IS THE ELECTRONIC FILE DIGITALLY SIGNED AND SEALED UNDER RULE 61G15-23.004, F.A.C.

2/12/2025 7:22:33 AM
H:_Project24\2404_MidpointBridge-MSEWallRepairs\Structures\PlanAndElevationWithOverviewOfRepairs.dgn

TRAFFIC CONTROL PLAN NOTES

1. THIS TCP IS PROVIDED AS CONCEPTUAL. THE CONTRACTOR IS RESPONSIBLE FOR OBTAINING A PROFESSIONAL TRAFFIC ENGINEER LICENSED IN THE STATE OF FLORIDA AND FDOT ADVANCED TEMPORARY TRAFFIC CONTROL CERTIFIED TO DEVELOP A TCP SPECIFIC TO THE CONTRACTOR'S WORK SCHEDULE. SUBMIT THE SIGNED AND SEALED TCP TO THE EOR AND LEE COUNTY PRIOR TO COMMENCEMENT OF WORK.
2. REPAIR ITEMS 3 AND 6 REQUIRE PHASING TO MAINTAIN TRAFFIC ON THE BRIDGE. SEE TRAFFIC CONTROL PLAN FOR REQUIRED PHASING.
3. WORK ZONE REGULATORY SPEED LIMIT DURING CONSTRUCTION IS 45 MPH.
4. ALL LANE CLOSURES MUST BE REPORTED A MINIMUM OF 14 DAYS IN ADVANCE TO LEE COUNTY DEPARTMENT OF TRANSPORTATION, NEARBY LOCAL EMERGENCY AGENCIES, THE LOCAL OPERATIONS CENTER, AND THE LOCAL INFORMATION OFFICER, IN ACCORDANCE WITH FDOT STANDARD SPECIFICATION 102.
5. ALL TRAFFIC CONTROL SHALL BE IN ACCORDANCE WITH FDOT INDEX 102-600 AND MOT INDEX SERIES.
6. UTILIZE TEMPORARY REMOVABLE TAPE MARKINGS FOR ALL TEMPORARY PAVEMENT MARKINGS INSTALLED ON BRIDGE SURFACE. COST INCLUDED AS PART OF MOT, LS PAY ITEM.
7. UTILIZE DEVICE SPACING PER FDOT INDICES 102-600 FOR ALL CHANNELIZING DEVICES.
8. RELOCATE AND/OR COVER ANY SIGNS DURING CONSTRUCTION THAT CONFLICT WITH THE ACTIVE TRAFFIC CONTROL PLAN.
9. THE CONTRACTOR SHALL MAINTAIN THE EXISTING BRIDGE DECK TO AVOID DROP-OFFS DURING JOINT REPLACEMENT. ALL DROP-OFFS SHALL BE ELIMINATED PRIOR TO THE CONTRACTOR OPENING LANES TO TRAFFIC. IF THE JOINT WILL REMAIN OPEN OUTSIDE OF WORKING HOURS THIS SHALL BE DONE UTILIZING A PINNED MIN. 1/2" THK. STEEL PLATE AND SHALL NOT EXTEND 1" OR MORE ABOVE THE TRAVEL LANE HAVING AN UNEVEN SURFACE GREATER THAN 1/4" AND TRANSVERSE JOINTS SHALL NOT EXCEED 1" DIFFERENCE IN ELEVATION. STEEL PLATE SHALL NOT BE UTILIZED IN ACTIVE LANES. ANY TEMPORARY APRONS CONSTRUCTED WILL BE INCLUDED IN THE COST FOR MOT, LS.
10. NO DAYTIME LANE CLOSURES ALLOWED BETWEEN NOVEMBER 23 AND MARCH 31, UNLESS OTHERWISE APPROVED BY LEE COUNTY DOT.
11. LANE CLOSURES WILL BE RESTRICTED AS FOLLOWS:
    NO EASTBOUND LANE CLOSURES BETWEEN 6:00 AM AND 10:00 AM
    NO WESTBOUND LANE CLOSURES BETWEEN 3:00 PM AND 7:00 PM

2

TRAFFIC CONTROL PHASING NOTES

PHASE I
1. MAINTAIN EXISTING TRAFFIC PATTERN ALONG VETERANS MEMORIAL PARKWAY. INSTALL ADVANCED WARNING SIGNS PER FDOT INDICES 102-600.
2. INSTALL TEMPORARY TRAFFIC CONTROL DEVICES PER PHASE II TCP. UTILIZE FDOT INDICES 102-613, AND 102-620.

PHASE II
1. SHIFT TRAFFIC TO NEW TRAFFIC PATTERN PER PHASE II TCP.
2. PERFORM FIRST PHASE OF REPAIRS PER PHASE II TCP AND STRUCTURES PLANS. INSTALL NECESSARY TRAFFIC CONTROL DEVICES.
3. INSTALL TEMPORARY TRAFFIC CONTROL DEVICES PER PHASE III TCP. UTILIZE FDOT INDICES 102-613, AND 102-620.

PHASE III
1. SHIFT TRAFFIC TO NEW TRAFFIC PATTERN PER PHASE III TCP.
2. PERFORM SECOND PHASE OF REPAIRS PER PHASE III TCP AND STRUCTURES PLANS. INSTALL NECESSARY TRAFFIC CONTROL DEVICES. UTILIZE FDOT INDICES 102-613, AND 102-620.

PHASE IV
1. REMOVE TEMPORARY TRAFFIC CONTROL DEVICES AND SHIFT TRAFFIC TO FINAL CONFIGURATION.
2. CONSTRUCT FINAL FRICTION COURSE LAYER AND INSTALL FINAL PAVEMENT MARKINGS AND SIGNS PER PHASE III TCP. UTILIZE FDOT INDICES 102-613, AND 102-620.

PCMS DETAIL

14 DAYS PRIOR TO LANE CLOSURE AND DURING LANE CLOSURES	
DISPLAY 1	DISPLAY 2
LANE CLOSURES AHEAD	(BEGIN DATE) TO (END DATE)

BRIDGE NO. 124096

THE OFFICIAL RECORD OF THIS SHEET IS THE ELECTRONIC FILE DIGITALLY SIGNED AND SEALED UNDER RULE 61G15-23.004, F.A.C.

2/12/2025 7:22:34 AM
H:_Project24\2404_MidpointBridge-MSEWallRepairs\Structures\TrafficControlPlanNotes.dgn

REVISIONS

DATE	BY	DESCRIPTION	DATE	BY	DESCRIPTION
2-7-25	SDS	2 ADDED NOTE			

ELI S. ENDERS, P.E.
P.E. LICENSE NUMBER 86646
HIGHSPANS ENGINEERING, INC.
2121 MCGREGOR BOULEVARD
SUITE 200
FORT MYERS, FL 33901

DRAWN BY: JAH 4/24
CHECKED BY: TMW 4/24
DESIGNED BY: JAH 4/24
CHECKED BY: TMW 4/24

LEE COUNTY DEPARTMENT OF TRANSPORTATION

ROAD NO.	COUNTY	COUNTY PROJECT NO.
	LEE	CN200224JJB

SHEET TITLE: TRAFFIC CONTROL PLAN NOTES

PROJECT NAME: MIDPOINT BRIDGE REPAIRS

REF. DWG. NO.

SHEET NO. 5

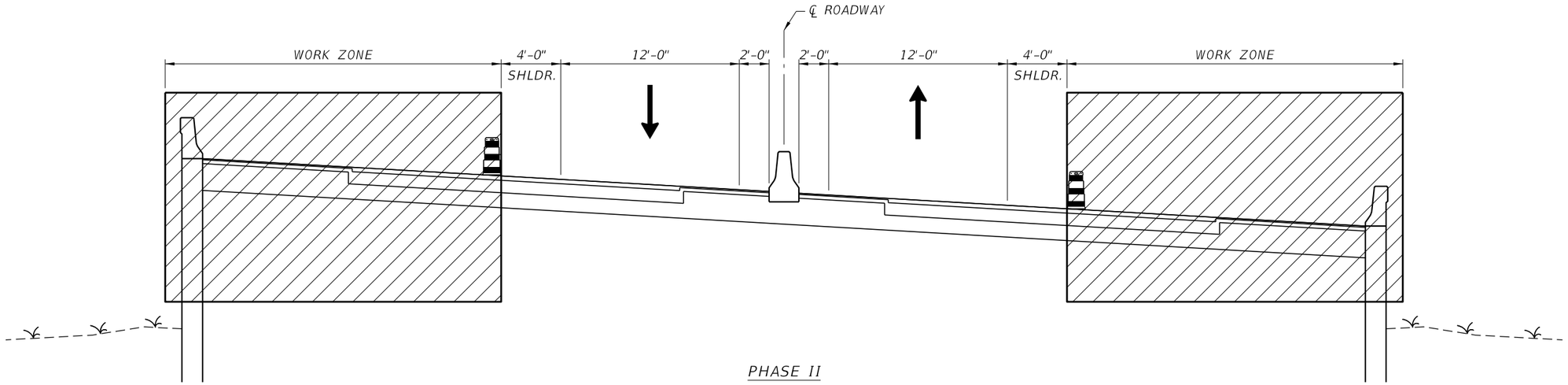

PHASE II

LOOKING EAST
(MSE SOIL REINFORCEMENT NOT SHOWN FOR CLARITY)
* IF TEMPORARY STRIPING IS UTILIZED, TEMPORARY TAPE SHALL BE USED

LEGEND

CHANNELIZING DEVICE (PLASTIC DRUMS SHOWN)

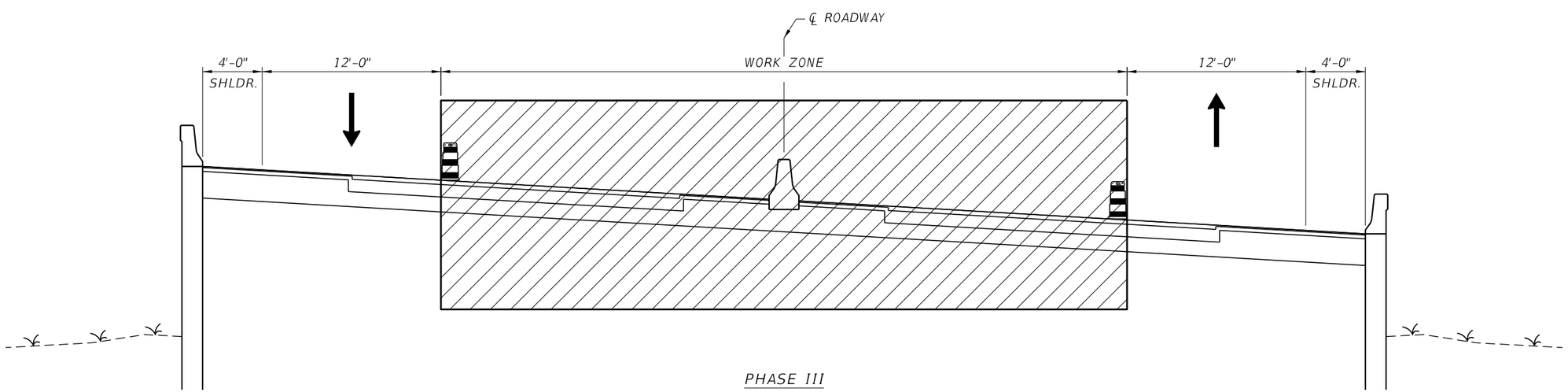

PHASE III

LOOKING EAST
(MSE SOIL REINFORCEMENT NOT SHOWN FOR CLARITY)
* IF TEMPORARY STRIPING IS UTILIZED, TEMPORARY TAPE SHALL BE USED

BRIDGE NO. 124096

REVISIONS					
DATE	BY	DESCRIPTION	DATE	BY	DESCRIPTION

ELI S. ENDERS, P.E.
P.E. LICENSE NUMBER 86646

HIGHSPANS ENGINEERING, INC.
2121 MCGREGOR BOULEVARD
SUITE 200
FORT MYERS, FL 33901

DRAWN BY: JAH 4/24
CHECKED BY: TMW 4/24
DESIGNED BY: JAH 4/24
CHECKED BY: TMW 4/24

LEE COUNTY
DEPARTMENT OF TRANSPORTATION

ROAD NO.	COUNTY	COUNTY PROJECT NO.
	LEE	CN200224JJB

SHEET TITLE: TRAFFIC CONTROL PLAN / CONSTRUCTION PHASING

PROJECT NAME: MIDPOINT BRIDGE REPAIRS

REF. DWG. NO.

SHEET NO. 6

THE OFFICIAL RECORD OF THIS SHEET IS THE ELECTRONIC FILE DIGITALLY SIGNED AND SEALED UNDER RULE 61G15-23.004, F.A.C.

2/12/2025 7:22:35 AM
H:_Project24\2404_MidpointBridge-MSEWallRepairs\Structures\TrafficControlPlan-ConstructionPhasing.dgn

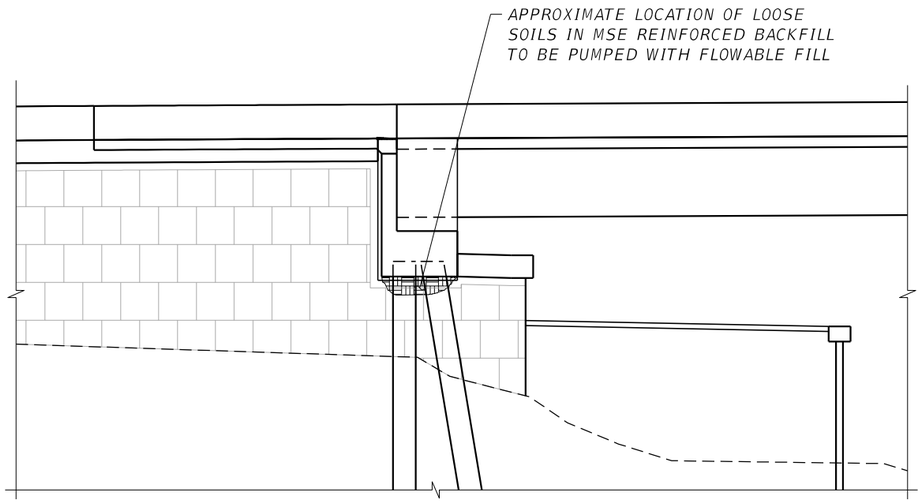

SOIL EXFILTRATION BELOW BEGIN BRIDGE END BENT

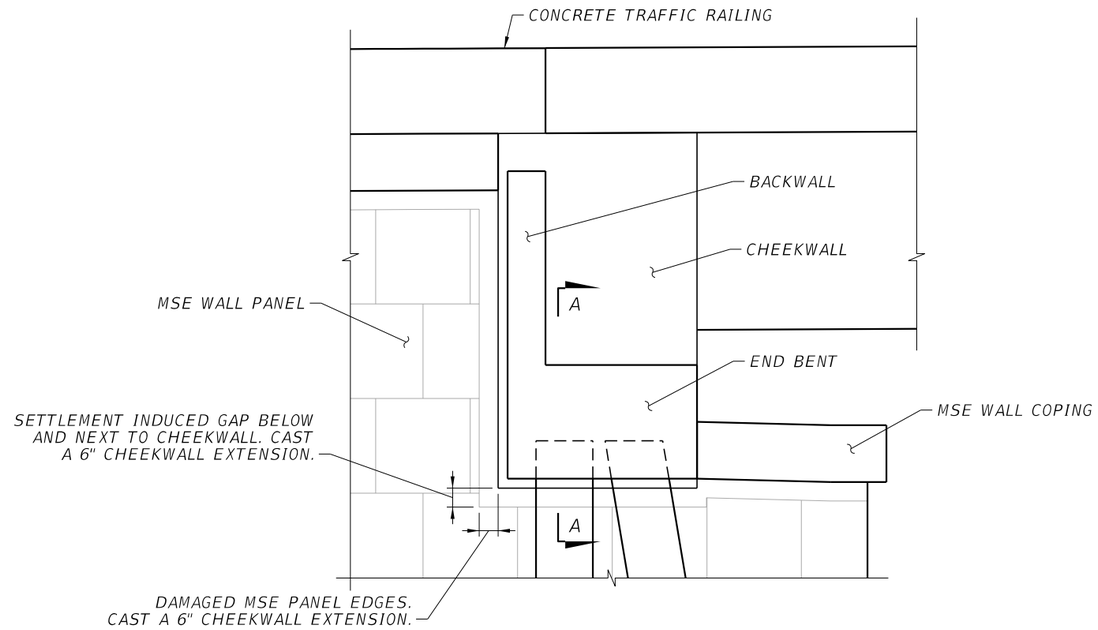

CHEEKWALL REPAIR DETAIL (TYP.)

(SUPERSTRUCTURE NOT SHOWN FOR CLARITY)

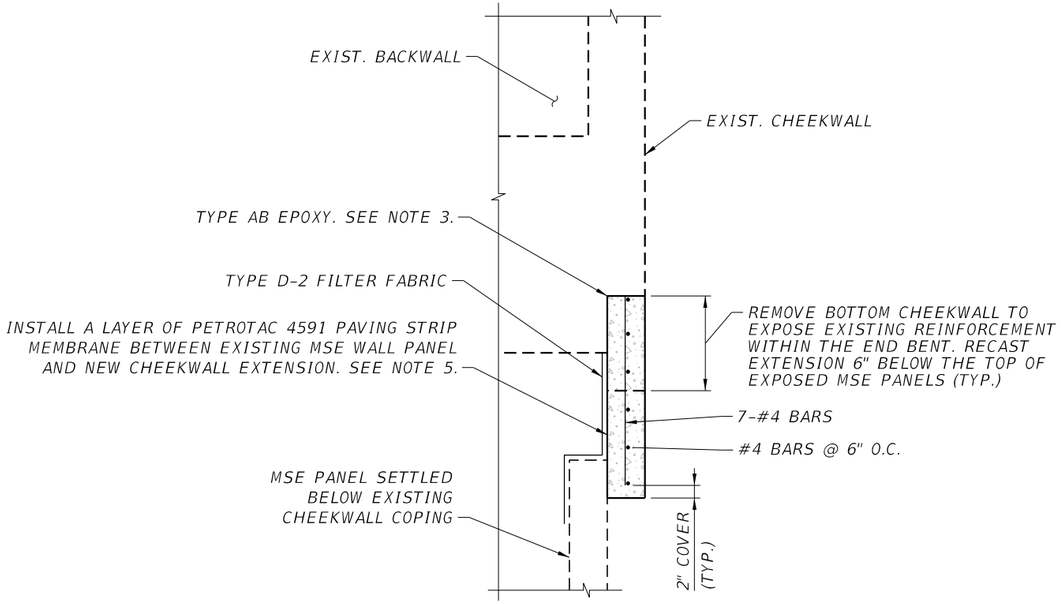

SECTION A-A
CHEEKWALL EXTENSION

REPAIR TYPE 1 QUANTITIES BEGIN BRIDGE VOID REPAIR			
LOCATION		UNIT	TOTAL QUANTITY OF REPAIR
NORTH CHEEKWALL EXTENSION	CONCRETE CLASS IV	CF	4
	REINF. STEEL	LB	19
SOUTH CHEEKWALL EXTENSION	CONCRETE CLASS IV	CF	4
	REINF. STEEL	LB	19
END BENT VOID	FLOWABLE FILL	CY	7.5

VOID REPAIR NOTES:

1. ALL LOCATIONS AND QUANTILES OF FLOWABLE FILL ARE APPROXIMATE. THE CONTRACTOR SHALL RECORD THE QUANTITY OF FLOWABLE FILL PUMPED OR INJECTED INTO THE VOID BENEATH THE BEGIN BRIDGE END BENT.
2. PLACE FLOWABLE FILL ACCORDING TO FDOT SPECIFICATIONS SECTION 121 AND MANUFACTURER'S RECOMMENDATIONS.
3. THE CONTRACTOR SHALL ENSURE THAT THE MATERIAL IS BEING PUMPED IN SUCH A MANNER THAT THE FLOWABLE FILL MATERIAL IS EVENLY DISTRIBUTED UNDERNEATH THE END BENT.

CHEEKWALL EXTENSION NOTES:

1. REMOVE THE BOTTOM OF CHEEKWALL TO EXPOSE EXISTING REINFORCEMENT WITHIN THE END BEND FOR TIE-IN TO NEW CHEEKWALL EXTENSION REINFORCEMENT.
2. CLEAN EXISTING REINFORCEMENT AND REMOVE ALL SURFACE RUST BY POWER TOOL CLEANING, IF APPLICABLE.
3. RECAST CHEEKWALL EXTENSION 6" BELOW THE TOP OF EXPOSED MSE PANELS. THE CHEEKWALL THICKNESS, WIDTH, AND SURFACE FINISH SHALL MATCH EXISTING. APPLY TYPE AB EPOXY BONDING AGENT WITH CORROSION INHIBITORS LISTED ON THE FDOT'S APL TO EXPOSED CONCRETE SURFACES FOR BONDING TO FRESH CONCRETE. FOLLOW MANUFACTURER'S SPECIFICATIONS FOR SURFACE PREPARATION, USE, AND INSTALLATION.
4. CONTRACTOR SHALL PLACE A LAYER OF APPROVED TYPE D-2 FILTER FABRIC MATERIAL BEHIND THE CHEEKWALL EXTENDING BELOW THE TOP MSE PANELS.
5. THE CONTRACTOR SHALL PLACE A LAYER OF PETROTAC 4591 PAVING STRIP MEMBRANE OR APPROVED EQUAL BETWEEN THE EXISTING MSE WALL PANEL AND NEW CHEEKWALL EXTENSION PRIOR TO CASTING. SUBMIT PRODUCT TO EOR FOR APPROVAL.

BRIDGE NO. 124096

THE OFFICIAL RECORD OF THIS SHEET IS THE ELECTRONIC FILE DIGITALLY SIGNED AND SEALED UNDER RULE 61G15-23.004, F.A.C.

2/12/2025 7:22:36 AM
H:_Project24\2404_MidpointBridge-MSEWallRepairs\Structures\RepairType1Details.dgn

REVISIONS					
DATE	BY	DESCRIPTION	DATE	BY	DESCRIPTION

THOMAS M. WAITS, P.E.
P.E. LICENSE NUMBER 55460
HIGHSPANS ENGINEERING, INC.
2121 MCGREGOR BOULEVARD
SUITE 200
FORT MYERS, FL 33901

DRAWN BY: JAH 4/24
CHECKED BY: TMW 4/24
DESIGNED BY: JAH 4/24
CHECKED BY: TMW 4/24

LEE COUNTY
DEPARTMENT OF TRANSPORTATION

ROAD NO.	COUNTY	COUNTY PROJECT NO.
	LEE	CN200224JJB

SHEET TITLE: REPAIR TYPE 1 DETAILS

PROJECT NAME: MIDPOINT BRIDGE REPAIRS

REF. DWG. NO.

SHEET NO. 7

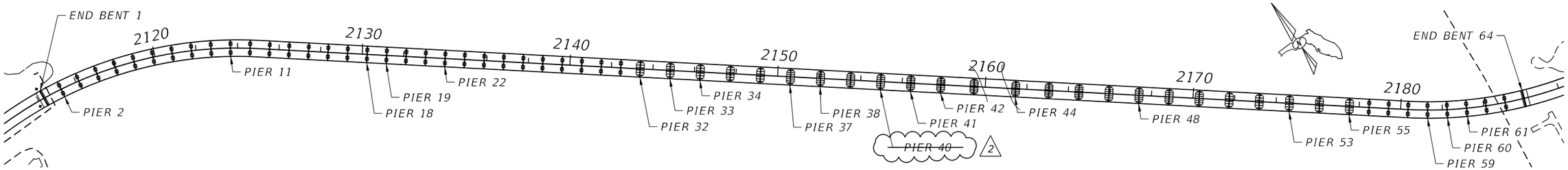

KEY PLAN

REPAIR TYPE 2 QUANTITIES CRACK INJECTION & SPALL REPAIR			
LOCATION		UNIT	ESTIMATED QUANTITY
SUPERSTRUCTURE			
BEAM 22-1	SPALL, BOTTOM SOUTH FLANGE 5FT FROM PIER 23	SF	1
~~BAY 38-4~~	~~DECK SPALL/DELAMINATION, 20FT WEST OF PIER 39~~	~~SF~~	~~5~~
~~BEAM 40-8~~	~~SPALL, TOP NORTH FLANGE 6FT FROM PIER 41~~	~~SF~~	~~1~~
~~BEAM 44-4~~	~~VOID, BOTTOM FACE 45FT FROM PIER 44 AT SPLICE~~	~~SF~~	~~1~~
BEAM 53-2	SPALL, TOP SOUTH FLANGE 8FT FROM PIER 53	SF	2
BAY 60-5	DECK SPALL/DELAMINATION, MIDSPAN	SF	1
BAY 61-5	DECK SPALL/DELAMINATION	SF	1
BAY 64-3	DIAPHRAGM SPALL	SF	1
SUBSTRUCTURE, ABOVE WATER			
END BENT 1	SOUTHERN CHEEKWALL/BACKWALL CRACKING	LF	5
	SOUTHERN BACKWALL SPALL	SF	1
	NORTHERN CHEEKWALL/BACKWALL CRACKING	LF	5
	NORTHERN EXTERIOR CHEEKWALL SPALL	SF	1
	NORTHERN BACKWALL SPALL	SF	1
	BEAM 1-4 DIAPHRAGM SPALL	SF	1
PIER CAP 18	SHEAR KEY SPALL, BAY 17-8	SF	1
FOOTING 19-1	SPALL, TOP NORTHEAST CORNER	SF	2
COLUMN 37-1	SPALL, WEST FACE 2FT BELOW CAP	SF	1
COLUMN 37-2	SPALL, WEST FACE 2FT BELOW CAP	SF	1
COLUMN 38-1	SPALL, WEST FACE 2FT BELOW CAP	SF	2
FOOTING 41	SPALL/DELAMINATION, TOP SOUTH CORNER	SF	2
FOOTING 42	SPALL, SOUTHWEST CORNER 1FT BELOW TOP	SF	2
PIER CAP 48	EXPOSED REBAR/SPALL, SOUTH END	SF	1
FOOTING 55	SPALL/DELAMINATION, TOP FACE NORTH END	SF	2
FOOTING 59-1	SPALL, TOP NORTHEAST CORNER	SF	1
END BENT 64	CONCRETE SLOPE PROTECTION CRACKING	LF	57
	NORTHERN BACKWALL CRACKING	LF	3
	SOUTHERN BACKWALL CRACKING	LF	3
SUBSTRUCTURE, UNDERWATER			
FOOTING 2-2	SPALL, SOUTHWEST CORNER 3.5FT BELOW TOP	SF	1
FOOTING 11-1	SPALL, NORTHEAST CORNER 3.5FT BELOW TOP	SF	1
FOOTING 32	VOID, SOUTHWEST ANGLED FACE 5.5FT BELOW TOP	SF	1
	VOID, SOUTH FACE 5FT BELOW TOP	SF	3
FOOTING 33	VOID, SOUTH FACE 4.5FT BELOW TOP	SF	1
FOOTING 34	VOID, SOUTH FACE 4.5FT BELOW TOP	SF	6
FOOTING 44	SPALL/VOID, SOUTHWEST CORNER 5FT BELOW TOP	SF	12
FOOTING 61-2	SPALL, SOUTHEAST CORNER 3.5FT BELOW TOP	SF	2
SEAWALLS			
WEST BULKHEAD	SPALL, WEST BULKHEAD UNDER BAY 1-3	SF	2
	SOUTHWEST BULKHEAD FIRST ANGLE BREAK CRACKING	LF	15
	SOUTHWEST BULKHEAD SECOND ANGLE BREAK CRACKING	LF	20
	SPALL, SOUTHWEST BULKHEAD SECOND ANGLE BREAK	SF	5

2

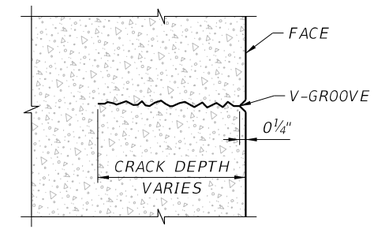

DETAIL 1 - SECTION THROUGH CRACK DEPTH

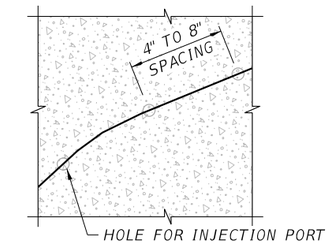

DETAIL 2 - PLAN VIEW

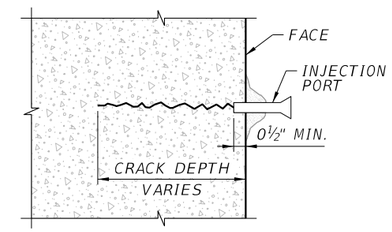

DETAIL 3 - SECTION THROUGH CRACK DEPTH

LEGEND

EXISTING CONCRETE SECTION (REINF. OMITTED FOR CLARITY)

TYPE F-1 EPOXY

CRACK REPAIR DETAILS

CRACK INJECTION NOTES:
1. PRIOR TO CRACK INJECTION, THE CONTRACTOR SHALL REVIEW THE LATEST BRIDGE INSPECTION REPORTS TO VERIFY THE LOCATIONS OF CRACKS AND SPALLS TO BE REPAIRED.
2. "V" GROOVE THE CONCRETE SURFACE ALONG FULL LENGTH OF THE CRACKS APPROXIMATELY 1/4" DEPTH AS SHOWN IN DETAIL 1.
3. CLEAN CONCRETE SURFACE IN ACCORDANCE WITH MANUFACTURER'S RECOMMENDATIONS PRIOR TO PLACING EPOXY COMPOUND.
4. DRILL HOLES FOR INJECTION PORTS TO A DEPTH SHOWN IN DETAIL 3.
5. SEAL SURFACE OF CRACK WITH EPOXY COMPOUND PER FDOT STANDARD SPECIFICATIONS, SECTION 411. EXTEND ABOVE CONCRETE SURFACE A MINIMUM OF 1/16" AND EXTEND A MINIMUM OF 1" TO EITHER SIDE OF CRACK. ALLOW A MINIMUM OF SIX HOURS CURING BEFORE INITIATING INJECTION PROCESS.
6. INSTALL INJECTION PORTS AND INJECT THE EPOXY COMPOUND PER FDOT STANDARD SPECIFICATIONS, SECTION 411. ALLOW MINIMUM OF SIX HOURS CURING TIME.
7. CUT THE PORTS AFTER CURING.

SPALL REPAIR NOTES:
1. PREPARE REPAIR AREA BY REMOVING ANY LOOSE CONCRETE, DELAMINATED PATCHES, AND MARINE GROWTH FROM THE CONCRETE SURFACE TO EXPOSE FULL EXTENT OF CRACKS OR SPALLS.
2. THE DEPTH OF CONCRETE REMOVAL SHALL BE LIMITED TO 4". IF LOOSE CONCRETE IS ENCOUNTERED BEYOND THIS LIMIT, THE DEMOLITION SHALL BE STOPPED AND THE ENGINEER SHALL BE NOTIFIED BEFORE PROCEEDING FURTHER.
3. IF CONCRETE REMOVAL EXPOSES A LAP SPLICE IN THE REINFORCEMENT, THE DEMOLITION SHALL BE STOPPED AND THE ENGINEER NOTIFIED BEFORE PROCEEDING FURTHER.
4. CLEAN ALL CORROSION FROM ANY EXPOSED REINFORCEMENT USING POWER TOOLS.
5. AFTER CONCRETE REMOVAL, EVALUATE ANY EXPOSED REINFORCEMENT AND NOTIFY ENGINEER IF STEEL SECTION LOSS DUE TO CORROSION IN ANY ONE BAR EXCEEDS 50% OF THE ORIGINAL BAR DIAMETER.
6. APPLY TYPE AB EPOXY BONDING AGENT WITH CORROSION INHIBITORS LISTED ON THE FDOT'S APL TO EXISTING CONCRETE FACES FOR BONDING TO FRESH CONCRETE. FOLLOW MANUFACTURE'S SPECIFICATIONS FOR SURFACE PREPARATION, USE, AND INSTALLATION.
7. USE A TROWEL OR OTHER SLENDER TOOL TO APPLY TYPE F-1 EPOXY MORTAR LISTED ON THE FDOT'S APL SUITABLE FOR WET APPLICATION, AND FINISH FLUSH WITH THE SURROUNDING SURFACES. SUBMIT PRODUCT TO ENGINEER FOR APPROVAL.
8. CONTRACTOR SHALL ENSURE THAT A COLLECTION SYSTEM IS IN PLACE TO PREVENT ANY CONSTRUCTION DEBRIS FROM ENTERING THE WATER DURING THE DEMOLITION AND RE-CASTING PHASES OF WORK.
9. FOR CRACKS WITH NO LOOSE OR SPALLED CONCRETE, FOLLOW CRACK INJECTION REPAIR PROCEDURES.

BRIDGE NO. 124096

REVISIONS

DATE	BY	DESCRIPTION	DATE	BY	DESCRIPTION
2-7-25	SDS	2 DELETED REPAIR ITEMS			

THOMAS M. WAITS, P.E.
P.E. LICENSE NUMBER 55460
HIGHSPANS ENGINEERING, INC.
2121 MCGREGOR BOULEVARD
SUITE 200
FORT MYERS, FL 33901

DRAWN BY: JAH 4/24
CHECKED BY: TMW 4/24
DESIGNED BY: JAH 4/24
CHECKED BY: TMW 4/24

LEE COUNTY
DEPARTMENT OF TRANSPORTATION

ROAD NO.	COUNTY	COUNTY PROJECT NO.
	LEE	CN200224JJB

SHEET TITLE: REPAIR TYPE 2 DETAILS (1 OF 2)

PROJECT NAME: MIDPOINT BRIDGE REPAIRS

REF. DWG. NO.

SHEET NO. 8

THE OFFICIAL RECORD OF THIS SHEET IS THE ELECTRONIC FILE DIGITALLY SIGNED AND SEALED UNDER RULE 61G15-23.004, F.A.C.

2/12/2025 7:22:37 AM
H:_Project24\2404_MidpointBridge-MSEWallRepairs\Structures\RepairType2Details1.dgn

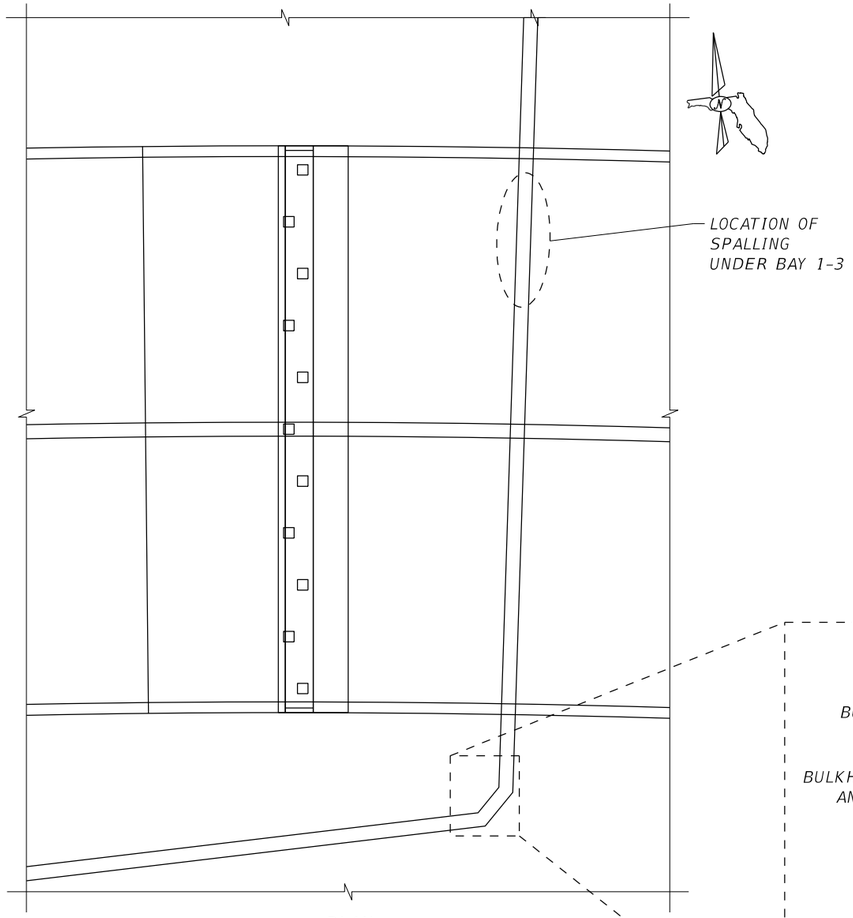

PLAN

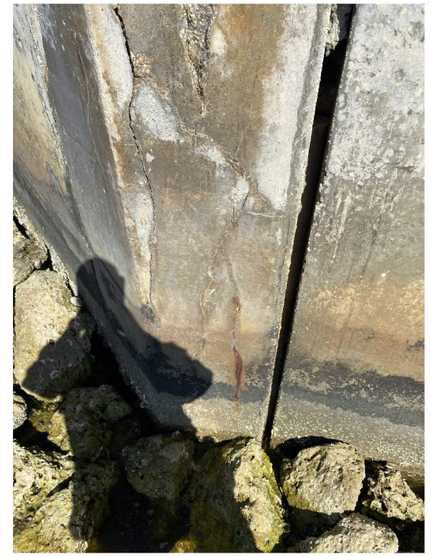

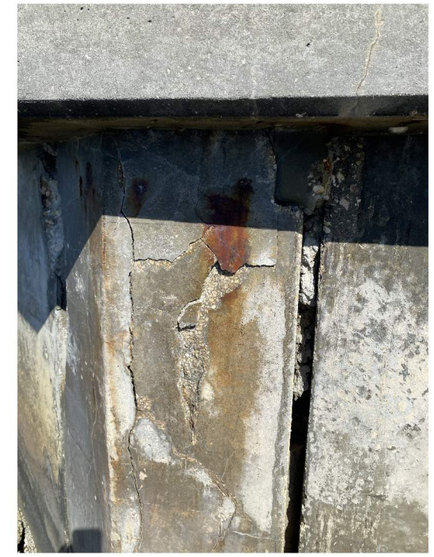

PHOTOS OF BULKHEAD FIRST ANGLE BREAK
TO BE REPAIRED

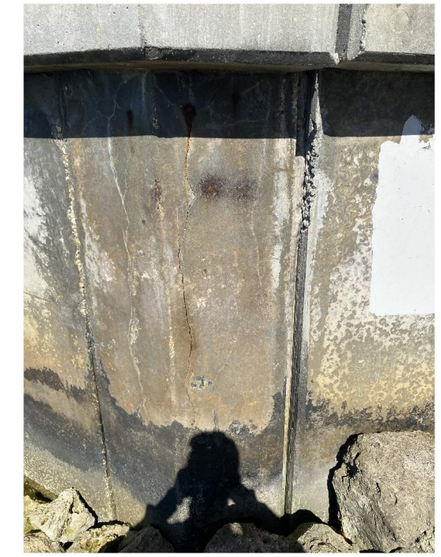

PHOTO OF BULKHEAD SECOND ANGLE BREAK
TO BE REPAIRED

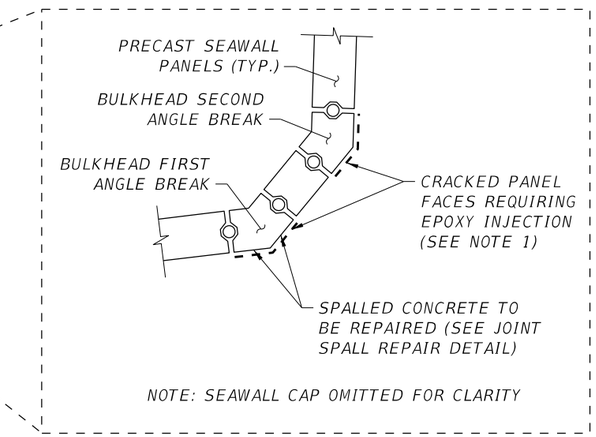

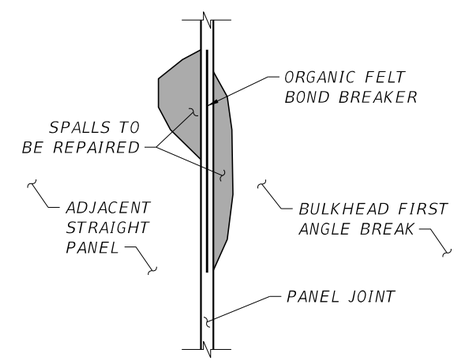

JOINT SPALL REPAIR DETAIL

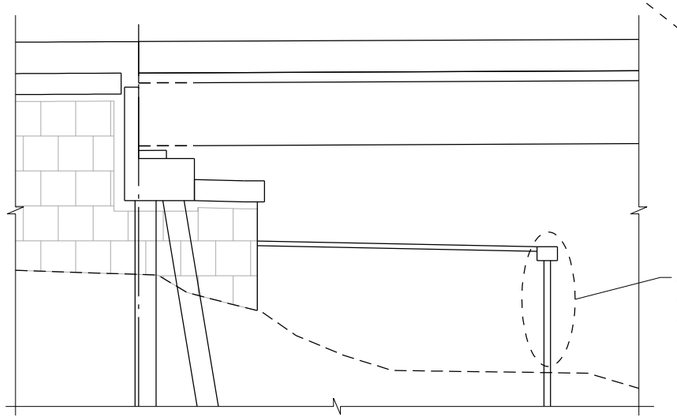

ELEVATION

NOTES:
1. ALL CRACKS ON THE TWO BULKHEAD ANGLE BREAKS GREATER THAN 0.006" WIDE SHALL BE EPOXY INJECTED.

BRIDGE NO. 124096

REVISIONS					
DATE	BY	DESCRIPTION	DATE	BY	DESCRIPTION

THOMAS M. WAITS, P.E.
P.E. LICENSE NUMBER 55460

HIGHSPANS ENGINEERING, INC.
2121 MCGREGOR BOULEVARD
SUITE 200
FORT MYERS, FL 33901

DRAWN BY: JAH 4/24
CHECKED BY: TMW 4/24
DESIGNED BY: JAH 4/24
CHECKED BY: TMW 4/24

LEE COUNTY
DEPARTMENT OF TRANSPORTATION

ROAD NO.	COUNTY	COUNTY PROJECT NO.
	LEE	CN200224JJB

SHEET TITLE: REPAIR TYPE 2 DETAILS (2 OF 2)

PROJECT NAME: MIDPOINT BRIDGE REPAIRS

REF. DWG. NO.

SHEET NO. 9

THE OFFICIAL RECORD OF THIS SHEET IS THE ELECTRONIC FILE DIGITALLY SIGNED AND SEALED UNDER RULE 61G15-23.004, F.A.C.

2/12/2025 7:22:39 AM
H:_Project24\2404_MidpointBridge-NSEWallRepairs\Structures\RepairType2Details2.dgn

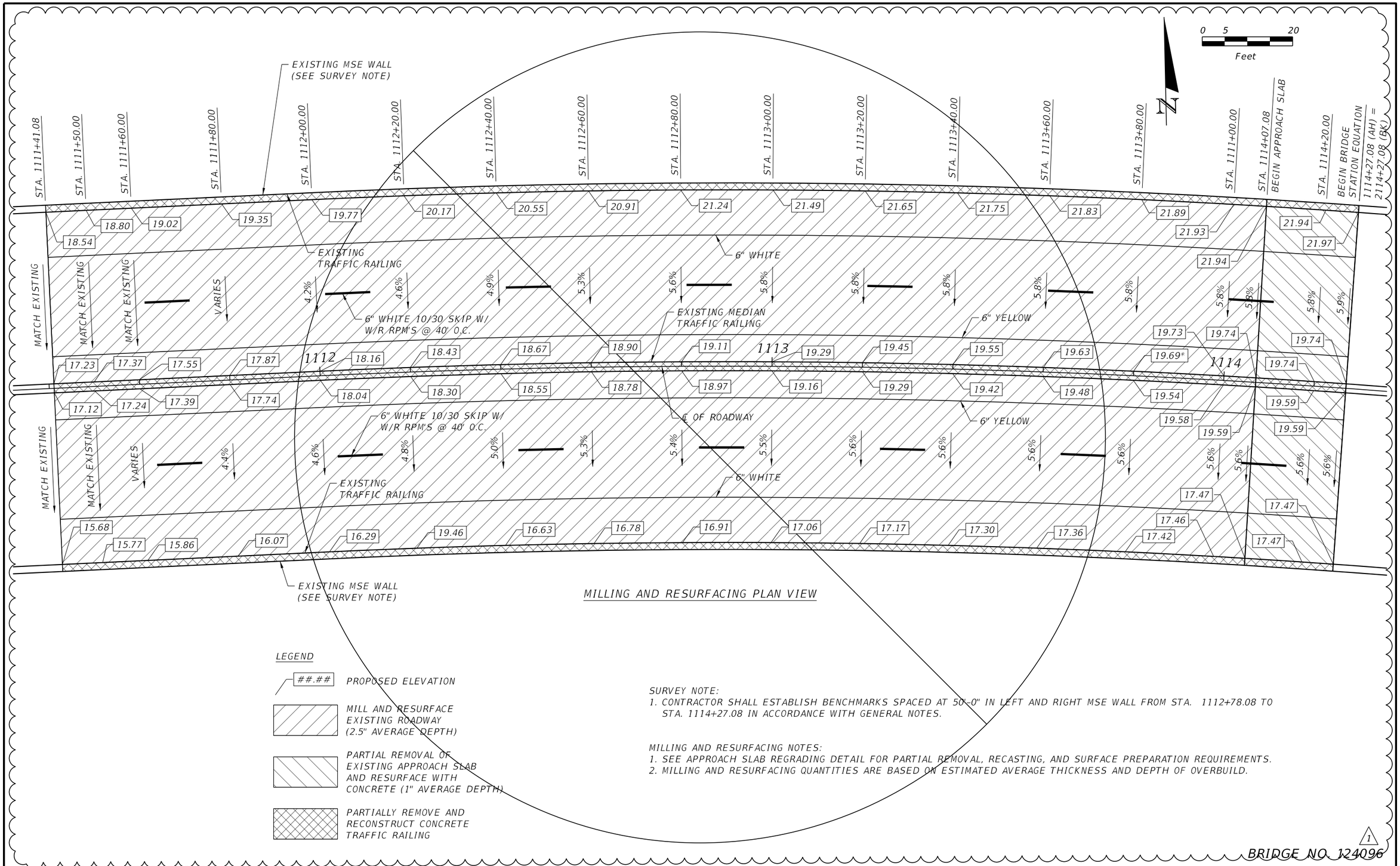

MILLING AND RESURFACING PLAN VIEW

LEGEND

- ##.## — PROPOSED ELEVATION
- MILL AND RESURFACE EXISTING ROADWAY (2.5" AVERAGE DEPTH)
- PARTIAL REMOVAL OF EXISTING APPROACH SLAB AND RESURFACE WITH CONCRETE (1" AVERAGE DEPTH)
- PARTIALLY REMOVE AND RECONSTRUCT CONCRETE TRAFFIC RAILING

SURVEY NOTE:
1. CONTRACTOR SHALL ESTABLISH BENCHMARKS SPACED AT 50'-0" IN LEFT AND RIGHT MSE WALL FROM STA. 1112+78.08 TO STA. 1114+27.08 IN ACCORDANCE WITH GENERAL NOTES.

MILLING AND RESURFACING NOTES:
1. SEE APPROACH SLAB REGRADING DETAIL FOR PARTIAL REMOVAL, RECASTING, AND SURFACE PREPARATION REQUIREMENTS.
2. MILLING AND RESURFACING QUANTITIES ARE BASED ON ESTIMATED AVERAGE THICKNESS AND DEPTH OF OVERBUILD.

1

BRIDGE NO. 124096

REVISIONS

DATE	BY	DESCRIPTION	DATE	BY	DESCRIPTION
10-25-24	SDS	1 DELETED SHEETS (NIC)			

ELI S. ENDERS, P.E.
P.E. LICENSE NUMBER 86646
HIGHSPANS ENGINEERING, INC.
2121 MCGREGOR BOULEVARD
SUITE 200
FORT MYERS, FL 33901

DRAWN BY: JAH 4/24
CHECKED BY: TMW 4/24
DESIGNED BY: JAH 4/24
CHECKED BY: TMW 4/24

LEE COUNTY DEPARTMENT OF TRANSPORTATION

ROAD NO.	COUNTY	COUNTY PROJECT NO.
	LEE	CN200224JJB

SHEET TITLE: REPAIR TYPE 3 DETAILS (1 OF 3)

PROJECT NAME: MIDPOINT BRIDGE REPAIRS

REF. DWG. NO.

SHEET NO. 10

2/12/2025 7:22:40 AM
H:_Project24\2404_MidpointBridge-MSEWallRepairs\Structures\RepairType3Details1.dgn

THE OFFICIAL RECORD OF THIS SHEET IS THE ELECTRONIC FILE DIGITALLY SIGNED AND SEALED UNDER RULE 61G15-23.004, F.A.C.

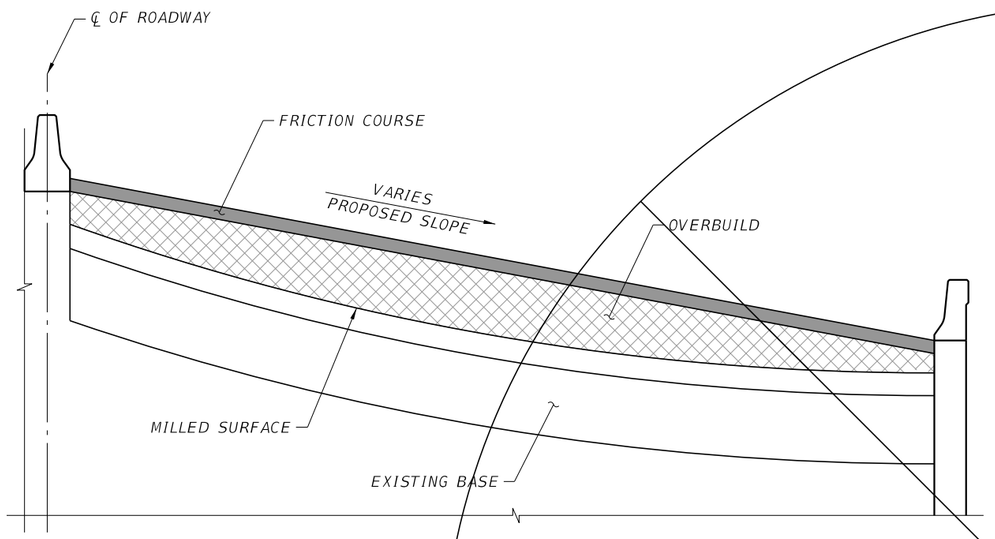

TYPICAL EASTBOUND DETAIL, WESTBOUND SIMILAR (N.T.S.)

STA. 1111+41.08 TO STA. 1114+27.08

MILLING

MILL EXISTING ASPHALT PAVEMENT FOR DEPTH (2½")

OVERBUILD

TYPE SP-12.5 STRUCTURAL THICKNESS VARIES, FRICTION COURSE FC-9.5 (1 ½") (PG 76-22)

REPAIR TYPE 3 QUANTITIES MILL AND RESURFACE WEST APPROACH		
PROCEDURE	UNIT	QUANTITY
REMOVAL OF EXISTING CONCRETE (FOR APPROACH SLAB)	SY	168
MILLING EXISTING ASPHALT PAVEMENT, 2 1/2" AVG DEPTH	SY	2815 *
SUPERPAVE ASPHALTIC CONCRETE, TRAFFIC E, SP-12.5	TN	613.0 **
ASPHALT CONCRETE FRICTION COURSE, TRAFFIC C, FC-9.5, PG 76-22	TN	224.3 ***
CONCRETE CLASS II (BRIDGE DECK), APPROACH SLABS	CY	3.3
CONCRETE TRAFFIC RAILING- BRIDGE, REPAIR EXISTING (PARTIAL REMOVAL AND RECONSTRUCTION)	LF	858
RAISED PAVEMENT MARKER, TYPE B	EA	16
THERMOPLASTIC, STANDARD-OTHER SURFACES, WHITE, SOLID, 6"	GM	0.108
THERMOPLASTIC, STANDARD-OTHER SURFACES, WHITE, SKIP, 6",10-30 SKIP	GM	0.108
THERMOPLASTIC, STANDARD-OTHER SURFACES, YELLOW, SOLID, 6"	GM	0.108
ESTABLISH SURVEY BENCHMARK	EA	16

* INCLUDES 400 SY CONTINGENCY THAT SHALL BE USED ONLY WHEN DIRECTED BY LEE COUNTY

** INCLUDES 50 TN CONTINGENCY THAT SHALL BE USED ONLY WHEN DIRECTED BY LEE COUNTY

*** INCLUDES 25 TN CONTINGENCY THAT SHALL BE USED ONLY WHEN DIRECTED BY LEE COUNTY

MIDPOINT WESTBOUND (LEFT ROADWAY) OVERBUILD DETAILS						
LOCATION		EXIST. SLOPE (%)	PROPOSED SLOPE (%)	MAX. DEPTH OF OVERBUILD (IN.)	WIDTH OF OVERBUILD (FT.)	AREA OF OVERBUILD (SQ. FT.)
STATION	LANE					
1111+41.08	WESTBOUND	(+) 3.5	EXIST.	1.0	38	3.2
1111+50.00	WESTBOUND	(+) 3.8	EXIST.	1.0	38	3.2
1111+60.00	WESTBOUND	(+) 3.9	EXIST.	1.0	38	3.2
1111+80.00	WESTBOUND	(+) 3.9	VARIES (+3.9)	2.1	38	4.4
1112+00.00	WESTBOUND	(+) 4.5	(+) 4.2	2.8	38	7.4
1112+20.00	WESTBOUND	(+) 4.9	(+) 4.6	3.1	38	8.7
1112+40.00	WESTBOUND	(+) 5.5	(+) 4.9	3.9	38	9.5
1112+60.00	WESTBOUND	(+) 5.8	(+) 5.3	5.0	38	12.2
1112+80.00	WESTBOUND	(+) 5.5	(+) 5.6	5.5	38	15.4
1113+00.00	WESTBOUND	(+) 5.8	(+) 5.8	5.9	38	16.5
1113+20.00	WESTBOUND	(+) 5.8	(+) 5.8	6.3	38	18.5
1113+40.00	WESTBOUND	(+) 5.9	(+) 5.8	5.8	38	16.2
1113+60.00	WESTBOUND	(+) 5.6	(+) 5.8	5.0	38	14.6
1113+80.00	WESTBOUND	(+) 5.7	(+) 5.8	4.7	38	13.6
1114+00.00	WESTBOUND	(+) 5.4	(+) 5.8	4.6	38	12.7
1114+07.08	WESTBOUND	(+) 6.0	(+) 5.8	4.3	38	12.3
1114+20.00	WESTBOUND	(+) 5.9	(+) 5.8	2.7	38	7.5
1114+27.08	WESTBOUND	(+) 5.9	(+) 5.9	1.0	38	3.3

TABLE NOTE: WORK OVERBUILD DETAILS TABLES WITH APPROACH SLAB PARTIAL REMOVAL AND REGRADING PLANS.

MIDPOINT EASTBOUND (RIGHT ROADWAY) OVERBUILD DETAILS						
LOCATION		EXIST. SLOPE (%)	PROPOSED SLOPE (%)	MAX. DEPTH OF OVERBUILD (IN.)	WIDTH OF OVERBUILD (FT.)	AREA OF OVERBUILD (SQ. FT.)
STATION	LANE					
1111+41.08	EASTBOUND	(-) 3.8	EXIST.	1.0	38	3.2
1111+50.00	EASTBOUND	(-) 3.9	EXIST.	1.0	38	3.2
1111+60.00	EASTBOUND	(-) 4.0	VARIES (-4.4)	1.0	38	3.1
1111+80.00	EASTBOUND	(-) 4.1	(-) 4.6	1.8	38	2.3
1112+00.00	EASTBOUND	(-) 4.4	(-) 4.8	2.9	38	6.6
1112+20.00	EASTBOUND	(-) 4.8	(-) 5.1	3.2	38	9.4
1112+40.00	EASTBOUND	(-) 5.3	(-) 5.3	4.0	38	10.6
1112+60.00	EASTBOUND	(-) 5.3	(-) 5.4	3.8	38	11.9
1112+80.00	EASTBOUND	(-) 5.2	(-) 5.5	5.2	38	14.3
1113+00.00	EASTBOUND	(-) 5.1	(-) 5.6	6.2	38	17.6
1113+20.00	EASTBOUND	(-) 5.4	(-) 5.6	6.9	38	20.4
1113+40.00	EASTBOUND	(-) 5.7	(-) 5.6	7.6	38	21.7
1113+60.00	EASTBOUND	(-) 5.9	(-) 5.6	6.8	38	20.1
1113+80.00	EASTBOUND	(-) 5.9	(-) 5.6	5.5	38	16.1
1114+00.00	EASTBOUND	(-) 6.0	(-) 5.6	4.8	38	13.9
1114+07.08	EASTBOUND	(-) 5.9	(-) 5.6	5.1	38	14.2
1114+20.00	EASTBOUND	(-) 5.7	(-) 5.6	2.9	38	8.3
1114+27.08	EASTBOUND	(-) 5.6	(-) 5.6	1.0	38	3.2

TABLE NOTE: WORK OVERBUILD DETAILS TABLES WITH APPROACH SLAB PARTIAL REMOVAL AND REGRADING PLANS.

1

BRIDGE NO. 124096

THE OFFICIAL RECORD OF THIS SHEET IS THE ELECTRONIC FILE DIGITALLY SIGNED AND SEALED UNDER RULE 61G15-23.004, F.A.C.

REVISIONS

DATE	BY	DESCRIPTION	DATE	BY	DESCRIPTION
10-25-24	SDS	1 DELETED SHEETS (NIC)			

ELI S. ENDERS, P.E.
P.E. LICENSE NUMBER 86646
HIGHSPANS ENGINEERING, INC.
2121 MCGREGOR BOULEVARD
SUITE 200
FORT MYERS, FL 33901

DRAWN BY: JAH 4/24
CHECKED BY: TMW 4/24
DESIGNED BY: JAH 4/24
CHECKED BY: TMW 4/24

LEE COUNTY DEPARTMENT OF TRANSPORTATION

ROAD NO.	COUNTY	COUNTY PROJECT NO.
	LEE	CN200224JJB

SHEET TITLE: REPAIR TYPE 3 DETAILS (2 OF 3)

PROJECT NAME: MIDPOINT BRIDGE REPAIRS

REF. DWG. NO.

SHEET NO. 11

2/12/2025 7:22:41 AM
H:_Project24\2404_MidpointBridge-MSEWallRepairs\Structures\RepairType3Details2.dgn

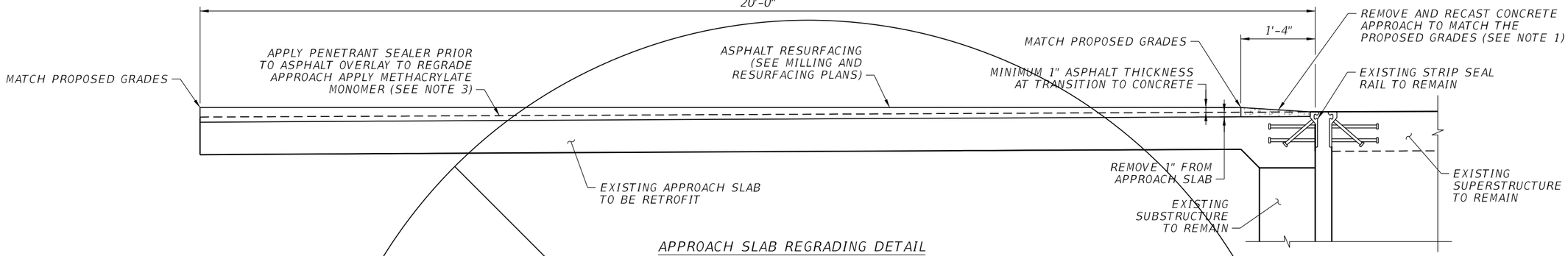

APPROACH SLAB REGRADING DETAIL

(BEGIN APPROACH ONLY)

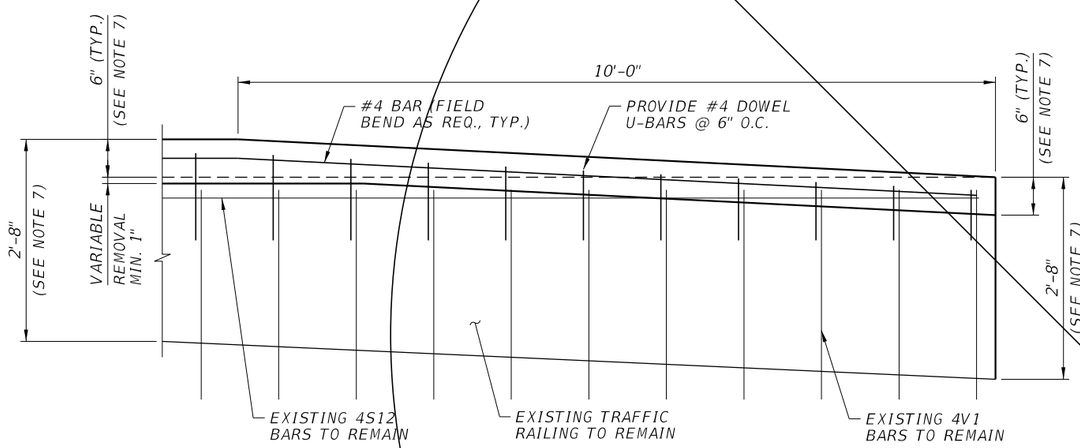

MEDIAN TRAFFIC RAILING EXTENSION

(END TRANSITION SHOWN, BEGIN TRANSITION MIRRORED)

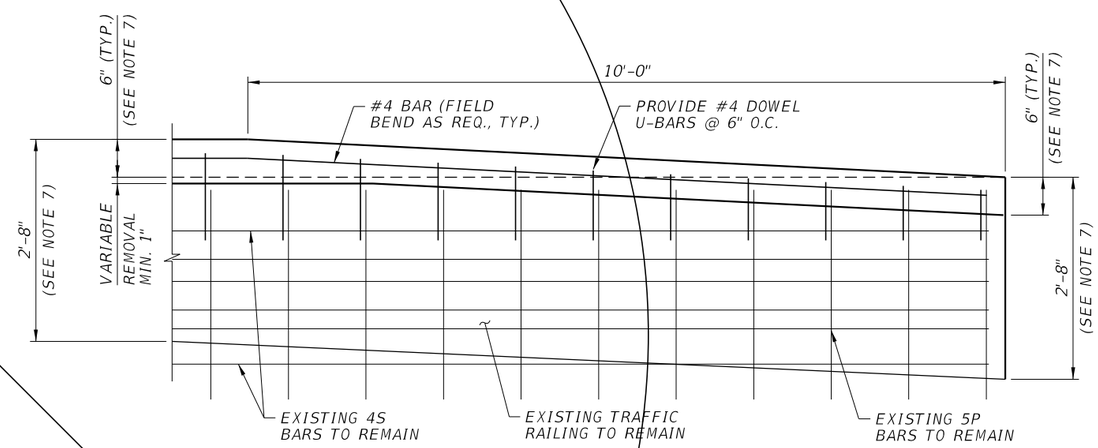

SHOULDER TRAFFIC RAILING EXTENSION

(END TRANSITION SHOWN, BEGIN TRANSITION MIRRORED)

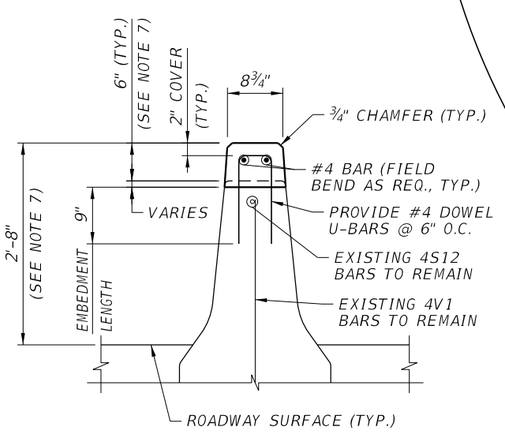

MEDIAN TRAFFIC RAILING EXTENSION

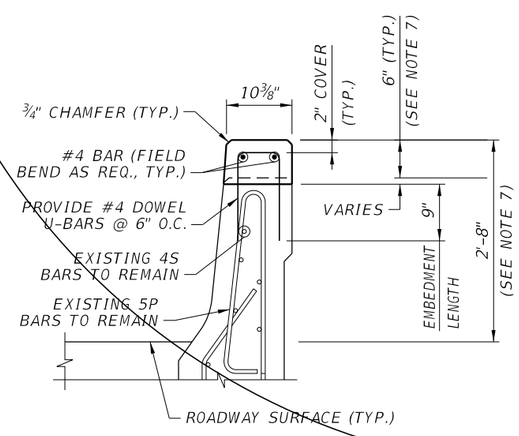

SHOULDER TRAFFIC RAILING EXTENSION

APPROACH SLAB RESURFACING NOTES:

1. REMOVE THE TOP 1" OF THE CONCRETE APPROACH SLAB AND RECAST WITH CONCRETE TYPE SPECIFIED IN THE GENERAL NOTES. ADJUST THE GRADES TO MATCH THE PROPOSED.
2. APPLY TYPE AB EPOXY BONDING AGENT WITH CORROSION INHIBITORS LISTED ON THE FDOT'S APL TO EXISTING CONCRETE FACES FOR BONDING TO FRESH CONCRETE. FOLLOW MANUFACTURER'S SPECIFICATIONS FOR SURFACE PREPARATION, USE, AND INSTALLATION.
3. FOR ALL SECTIONS OF THE APPROACH SLAB, INSERT METHACRYLATE MONOMER LISTED ON THE APL TO THE EXISTING CRACKS WITHIN THE CONCRETE FACE AFTER MILLING AND PRIOR TO ASPHALT OVERLAY. FOLLOW MANUFACTURER'S SPECIFICATIONS FOR SURFACE PREPARATION, USE, AND INSTALLATION.

TRAFFIC RAILING REPAIR NOTES:

1. REMOVE 1" BELOW THE TOP OF EACH TRAFFIC RAILING AND MEDIAN RAILING ALONG THE PROPOSED SECTIONS AND RECAST WITH CONCRETE TYPE SPECIFIED IN THE GENERAL NOTES. ADJUST THE GRADES TO MATCH THE PROPOSED.
2. LOCATE RAILING REBAR PRIOR TO CONCRETE REMOVAL USING NON-DESTRUCTIVE MEANS AND PRESERVE ALL EXISTING REBAR REINFORCEMENT IN PLACE. SUBMIT THE DEMOLITION PLAN WITH REBAR LOCATIONS TO THE ENGINEER FOR REVIEW AND APPROVAL.
3. ADHESIVE BONDING MATERIAL SYSTEM FOR DOWELS SHALL COMPLY WITH SPECIFICATION SECTION 937. USE A PRE-APPROVED TYPE HS ADHESIVE MATERIAL PER THE DEPARTMENT'S APPROVED PRODUCT LIST (APL) WITH A MINIMUM BOND STRENGTH OF 1.08 KSI. ADHESIVE BONDED DOWELS SHALL BE INSTALLED IN ACCORDANCE WITH MANUFACTURER'S RECOMMENDATIONS FOR HOLE DIAMETER AND HOLE CLEANING TECHNIQUE AND SHALL MEET REQUIREMENTS OF SPECIFICATIONS SECTION 416.
4. LOCATE RAILING REBAR PRIOR TO CONCRETE REMOVAL USING NON-DESTRUCTIVE MEANS AND PRESERVE ALL EXISTING REBAR REINFORCEMENT IN PLACE. SUBMIT THE DEMOLITION PLAN WITH REBAR LOCATIONS TO THE ENGINEER FOR REVIEW AND APPROVAL.
5. APPLY EPOXY BONDING AGENT TO EXISTING CONCRETE FACE WHERE RAILING EXTENSION WILL BE CAST. MECHANICALLY ROUGHEN FACE FOLLOWING EPOXY MANUFACTURER'S SPECIFICATIONS. USE A TYPE AB EPOXY BONDING AGENT WITH CORROSION INHIBITORS LISTED ON THE FDOT'S APL. FOLLOW ALL MANUFACTURER'S SPECIFICATIONS FOR SURFACE PREPARATION, USE, AND INSTALLATION.
6. FRESH CONCRETE AND CONCRETE DISTURBED BY CONSTRUCTION ACTIVITIES SHALL RECEIVE A CLASS 5 COATING IN ACCORDANCE WITH FDOT SPECIFICATIONS 400. COORDINATE WITH LCDOT FOR APPROVED COLOR.
7. PROVIDE A 2'-8" TRAFFIC RAILING HEIGHT MEASURED FROM THE RESURFACED ROADWAY ELEVATION ALONG THE FULL LENGTH OF MILLING AND RESURFACING. THE MINIMUM CAST HEIGHT OF THE TRAFFIC RAILING REPAIR IS 6". THE MINIMUM REMOVAL DEPTH FROM THE TOP OF EXISTING RAILING IS 1", HOWEVER, PROVIDE A VARIABLE REMOVAL DEPTH AS REQUIRED TO MEET THE MINIMUM CAST HEIGHT. 1

BRIDGE NO. 124096

REVISIONS

DATE	BY	DESCRIPTION	DATE	BY	DESCRIPTION
10-25-24	SDS	1 DELETED SHEETS (NIC)			

THOMAS M. WAITS, P.E.
P.E. LICENSE NUMBER 55460
HIGHSPANS ENGINEERING, INC.
2121 MCGREGOR BOULEVARD
SUITE 200
FORT MYERS, FL 33901

DRAWN BY: JAH 4/24
CHECKED BY: TMW 4/24
DESIGNED BY: JAH 4/24
CHECKED BY: TMW 4/24

LEE COUNTY DEPARTMENT OF TRANSPORTATION

ROAD NO.	COUNTY	COUNTY PROJECT NO.
	LEE	CN200224JJB

SHEET TITLE: REPAIR TYPE 3 DETAILS (3 OF 3)

PROJECT NAME: MIDPOINT BRIDGE REPAIRS

REF. DWG. NO.

SHEET NO. 12

THE OFFICIAL RECORD OF THIS SHEET IS THE ELECTRONIC FILE DIGITALLY SIGNED AND SEALED UNDER RULE 61G15-23.004, F.A.C.

2/12/2025 7:22:43 AM
H:_Project24\2404_MidpointBridge-MSEWallRepairs\Structures\RepairType3Details3.dgn

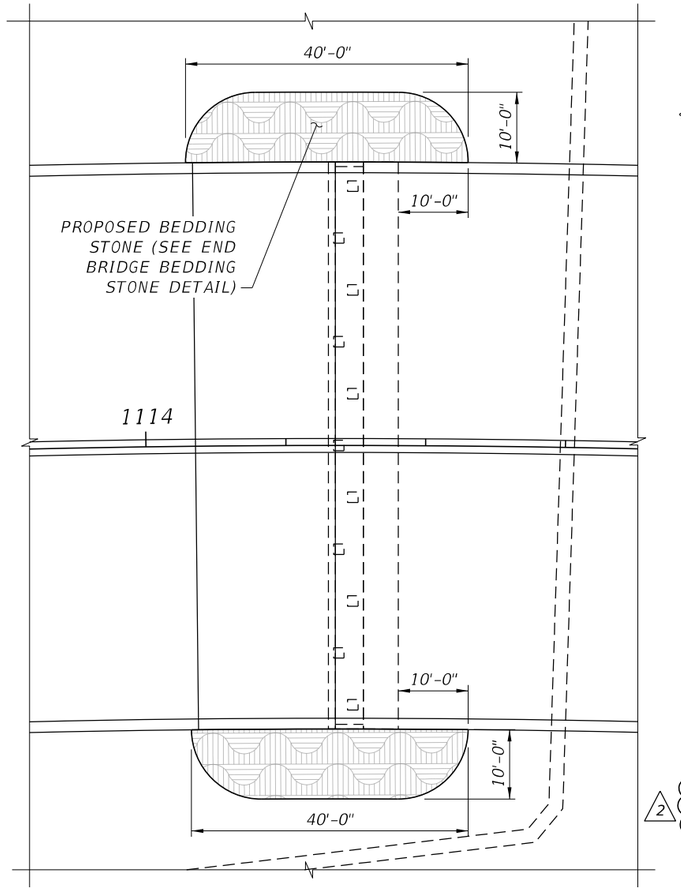

PLAN - BEGIN BRIDGE

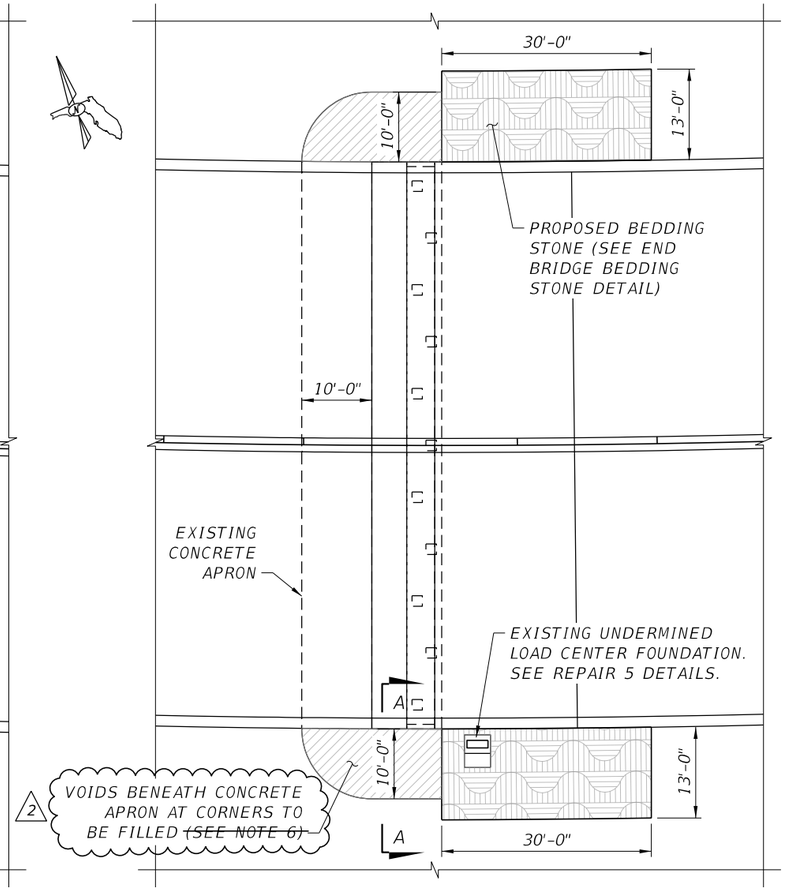

PLAN - END BRIDGE

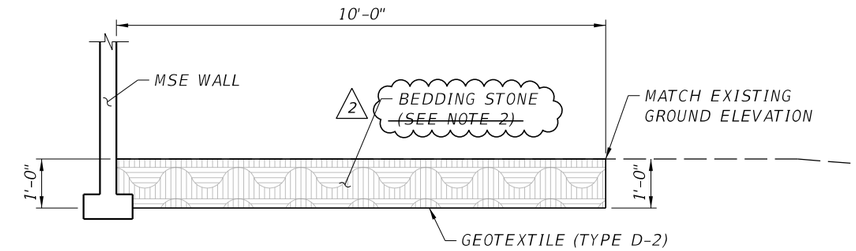

BEGIN BRIDGE BEDDING STONE DETAIL

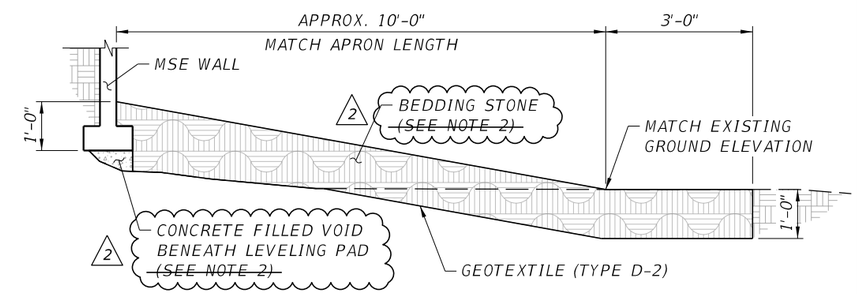

END BRIDGE BEDDING STONE DETAIL

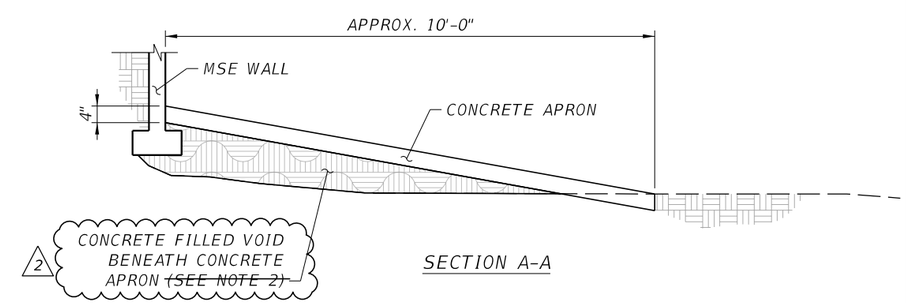

SECTION A-A

REPAIR TYPE 4 QUANTITIES END BRIDGE SCOUR PROTECTION		
REPAIR ITEM	UNIT	ESTIMATED QUANTITY
BEDDING STONE	TN	108
CONCRETE CLASS NS, VOID FILL	CF	131.5

BRIDGE NO. 124096

REVISIONS

DATE	BY	DESCRIPTION	DATE	BY	DESCRIPTION
2-7-25	SDS	2 REVISED NOTE			

THOMAS M. WAITS, P.E.
P.E. LICENSE NUMBER 55460
HIGHSPANS ENGINEERING, INC.
2121 MCGREGOR BOULEVARD
SUITE 200
FORT MYERS, FL 33901

DRAWN BY: JAH 4/24
CHECKED BY: TMW 4/24
DESIGNED BY: JAH 4/24
CHECKED BY: TMW 4/24

LEE COUNTY
DEPARTMENT OF TRANSPORTATION

ROAD NO.	COUNTY	COUNTY PROJECT NO.
	LEE	CN200224JJB

SHEET TITLE: REPAIR TYPE 4 DETAILS

PROJECT NAME: MIDPOINT BRIDGE REPAIRS

REF. DWG. NO.

SHEET NO. 13

THE OFFICIAL RECORD OF THIS SHEET IS THE ELECTRONIC FILE DIGITALLY SIGNED AND SEALED UNDER RULE 61G15-23.004, F.A.C.

2/12/2025 7:22:44 AM
H:_Project24\2404_MidpointBridge-MSEWallRepairs\Structures\RepairType4Details.dgn

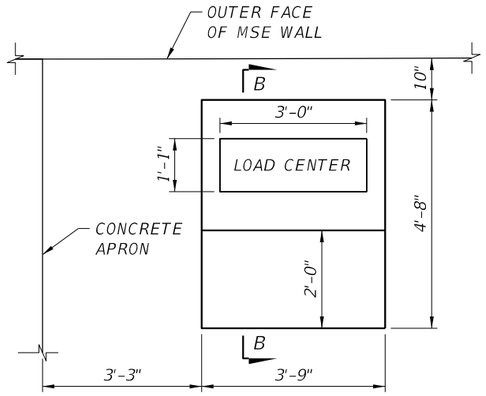

LOAD CENTER FOUNDATION DETAIL

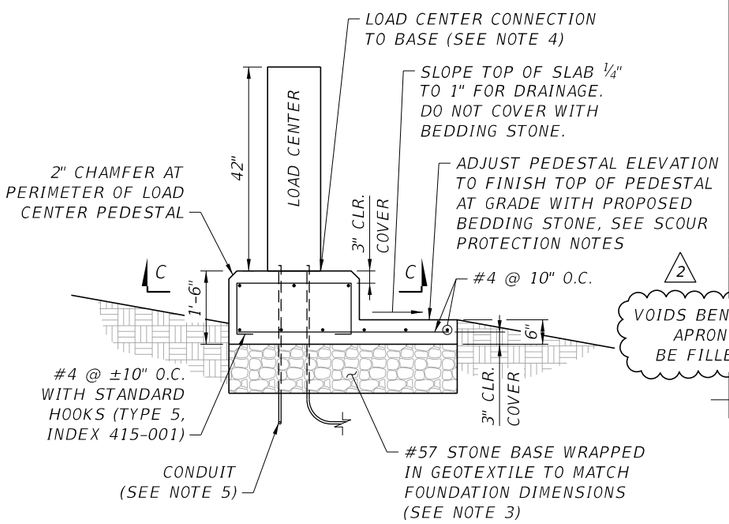

SECTION B-B

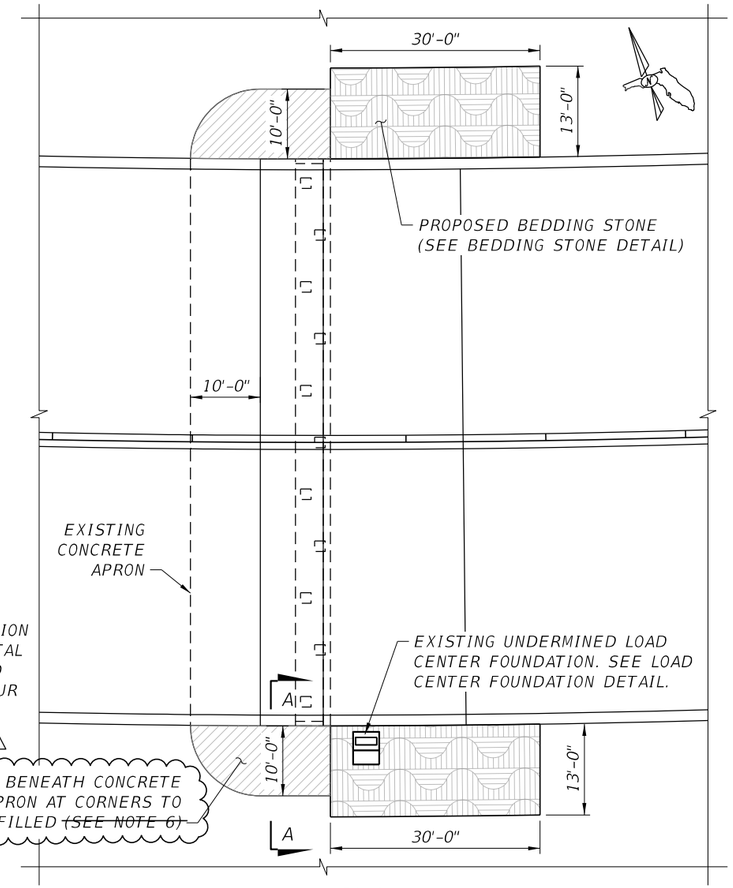

PLAN

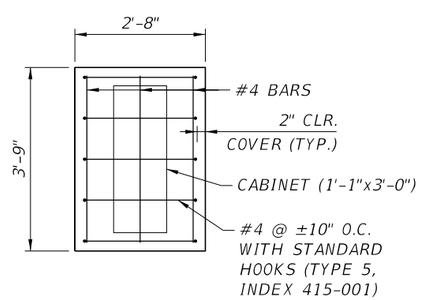

SECTION C-C

NOTES:

1. EXISTING LOAD CENTER FOUNDATION SHALL BE REMOVED, REPLACED, AND RESTORED TO SERVICE PRIOR TO PLACEMENT OF BEDDING STONE SLOPE PROTECTION.
2. THE EXISTING LOAD CENTER ELECTRICAL COMPONENTS SHALL BE DISCONNECTED BY A LICENSED ELECTRICIAN. PROTECT ALL EXISTING CONDUIT DURING REMOVAL OF LOAD CENTER FOUNDATION AND TEMPORARILY CAP ALL EXPOSED CONDUIT WITH A WEATHERPROOF FITTING. DOCUMENT QUANTITY AND SIZE OF EXISTING CONDUIT.
3. COMPACT THE SOIL BENEATH LOAD CENTER FOUNDATION EXCAVATION WITH SUITABLE EQUIPMENT TO A DENSITY NOT LESS THAN 95% OF THE MAXIMUM DENSITY AS DETERMINED BY FM 1-T180, FOR A MINIMUM DEPTH OF 1'-0" BELOW THE BOTTOM OF EXCAVATION BEFORE BACKFILLING BEGINS. PROVIDE CLEAN COMPACTED #57 CRUSHED LIMESTONE IN A 1'-0" LIFT WRAPPED IN A LAYER OF APPROVED TYPE D-2 GEOTEXTILE TO MATCH THE DIMENSIONS OF THE LOAD CENTER FOUNDATION.
4. INSTALL LOAD CENTER IN ACCORDANCE WITH FDOT SPECIFICATION 715. USE ANCHOR BOLTS TO FASTEN LOAD CENTER TO THE CONCRETE BASE TO MATCH EXISTING. SEAL THE JOINT BETWEEN THE BOTTOM OF THE LOAD CENTER AND THE CONCRETE BASE (INSIDE AND OUTSIDE OF CABINET) WITH A CLEAR SILICONE RUBBER SEALANT.
5. THE PROPOSED LOAD CENTER FOUNDATION SHALL HAVE THE SAME NUMBER AND SIZE CONDUIT INSTALLED AS WELL AS TWO ADDITIONAL 2" PVC CONDUIT PER FDOT INDEX 676-010. CONDUITS REQUIRED TO RESTORE SERVICE SHALL BE CONNECTED TO EXISTING LINES BY A LICENSED ELECTRICIAN AND SHALL BE A MINIMUM OF 1'-6" BENEATH EXISTING GROUND SURFACE. UNUSED CONDUITS SHALL BE CAPPED WITH A WEATHERPROOF FITTING. PROVIDE GROUNDING ROD AS REQUIRED.
6. THE CONTRACTOR MUST COORDINATE WITH THE LEE COUNTY TRAFFIC DIVISION BEFORE STARTING ANY WORK ON THE LOAD CENTER. (2)

REPAIR TYPE 5 QUANTITIES
LOAD CENTER FOUNDATION REPLACEMENT

LOCATION	UNIT	ESTIMATED QUANTITY
SELECT BEDDING MATERIAL	CF	18
CONCRETE CLASS II	CF	19
REINFORCING STEEL	LB	52

BRIDGE NO. 124096

REVISIONS

DATE	BY	DESCRIPTION	DATE	BY	DESCRIPTION
2-7-25	SDS	(2) REVISED NOTE			
2-12-25	SDS	(2) ADDED NOTE			

THOMAS M. WAITS, P.E.
P.E. LICENSE NUMBER 55460
HIGHSPANS ENGINEERING, INC.
2121 MCGREGOR BOULEVARD
SUITE 200
FORT MYERS, FL 33901

DRAWN BY: JAH 4/24
CHECKED BY: TMW 4/24
DESIGNED BY: JAH 4/24
CHECKED BY: TMW 4/24

LEE COUNTY
DEPARTMENT OF TRANSPORTATION

ROAD NO.	COUNTY	COUNTY PROJECT NO.
	LEE	CN200224JJB

SHEET TITLE: REPAIR TYPE 5 DETAILS

PROJECT NAME: MIDPOINT BRIDGE REPAIRS

REF. DWG. NO.

SHEET NO. 14

THE OFFICIAL RECORD OF THIS SHEET IS THE ELECTRONIC FILE DIGITALLY SIGNED AND SEALED UNDER RULE 61G15-23.004, F.A.C.

2/12/2025 7:22:44 AM
H:_Project24\2404_MidpointBridge-MSEWallRepairs\Structures\RepairTypeSDetails.dgn

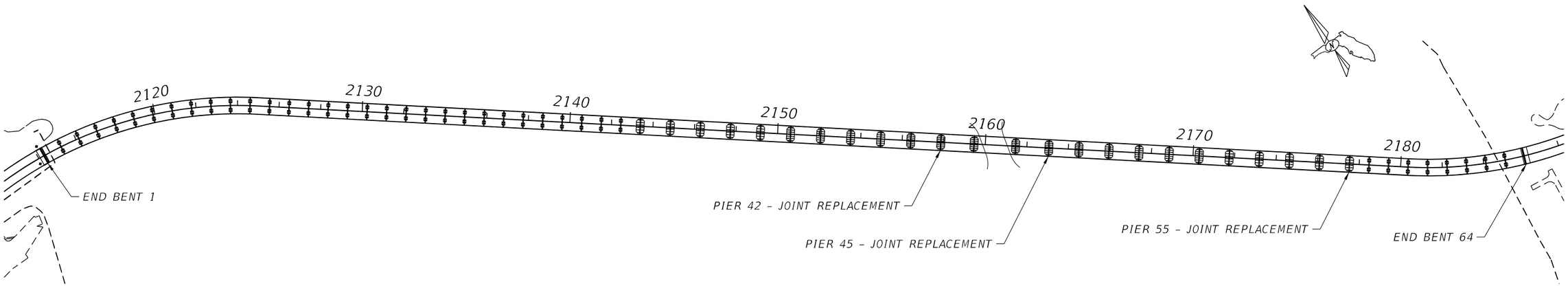

KEY PLAN

REPAIR TYPE 6 QUANTITIES EXPANSION JOINT REPAIRS			
LOCATION		UNIT	ESTIMATED QUANTITY
PIER 42	MODULAR JOINT NEOPRENE SEAL	LF	81
PIER 45	MODULAR JOINT NEOPRENE SEAL	LF	81
PIER 55	STRIP SEAL JOINT NEOPRENE SEAL	LF	81

NOTE:
1. REPLACEMENT OF BRIDGE EXPANSION JOINT NEOPRENE SEALS TO BE COMPLETED IN PHASES FOLLOWING THE TRAFFIC CONTROL PLAN.
2. PIER 55 EXPANSION JOINT STRIP SEAL FRAME RAILS ARE IDENTIFIED AS D.S. BROWN STEELFLEX SSCM2. PIERS 42 AND 45 EXPANSION JOINTS ARE IDENTIFIED AS D.S. BROWN MODULAR "D" SYSTEM. SEE EXISTING STRUCTURES PLANS SHEETS C-104A AND C-105A FOR ADDITIONAL EXPANSION JOINT INFORMATION AND DATA TABLES.
3. STRIP SEALS IDENTIFIED SHALL BE REPLACED IN KIND. EVALUATE THE EXISTING JOINTS TO VERIFY THE RAIL TYPE MATCHES THE PROPOSED PRODUCT. CONTRACTOR SHALL SUBMIT PROPOSED ELASTOMERIC STRIP SEAL PRODUCT, STRIP SEAL REMOVAL, AND INSTALLATION PROCEDURES TO ENGINEER FOR APPROVAL.
4. CONTRACTOR MUST COORDINATE WITH D.S. BROWN FOR STRIP SEAL REMOVAL AND INSTALLATION. FOLLOW ALL MANUFACTURER'S RECOMMENDATIONS AND PERFORM ALL WORK IN ACCORDANCE WITH FDOT STANDARD SPECIFICATIONS SECTION 458.
5. PORTIONS OF STRIP SEALS TO BE USED FOR PHASED CONSTRUCTION ARE TO BE TEMPORARILY COILED AND STORED NEAR THE EDGE OF PREVIOUS PHASE INSTALLATION. STRIP SEALS CANNOT BE CUT AT THE BOUNDARY BETWEEN CONSTRUCTION PHASES.

BRIDGE NO. 124096

THE OFFICIAL RECORD OF THIS SHEET IS THE ELECTRONIC FILE DIGITALLY SIGNED AND SEALED UNDER RULE 61G15-23.004, F.A.C.

2/12/2025 7:22:45 AM
H:_Project24\2404_MidpointBridge-MSEWallRepairs\Structures\RepairType6Details.dgn

REVISIONS					
DATE	BY	DESCRIPTION	DATE	BY	DESCRIPTION

THOMAS M. WAITS, P.E.
P.E. LICENSE NUMBER 55460
HIGHSPANS ENGINEERING, INC.
2121 MCGREGOR BOULEVARD
SUITE 200
FORT MYERS, FL 33901

DRAWN BY: JAH 4/24
CHECKED BY: TMW 4/24
DESIGNED BY: JAH 4/24
CHECKED BY: TMW 4/24

LEE COUNTY
DEPARTMENT OF TRANSPORTATION

ROAD NO.	COUNTY	COUNTY PROJECT NO.
	LEE	CN200224JJB

SHEET TITLE: REPAIR TYPE 6 DETAILS

PROJECT NAME: MIDPOINT BRIDGE REPAIRS

REF. DWG. NO.

SHEET NO. 15

W.P.I. NO. 7117045

A-1

BX1-1

PLAN OF PROPOSED

COUNTY ROAD NO. 884

LEE COUNTY CONTRACT NO. C861114

PROJECT NO. 5896

BID PACKAGE 2

MIDPOINT CORRIDOR PROJECT

MIDPOINT CORRIDOR OVER CALOOSAHATCHEE RIVER

THIS CONTRACT PLAN SET INCLUDES

STRUCTURE PLANS

SIGNING AND PAVEMENT MARKING PLANS

LIGHTING PLANS

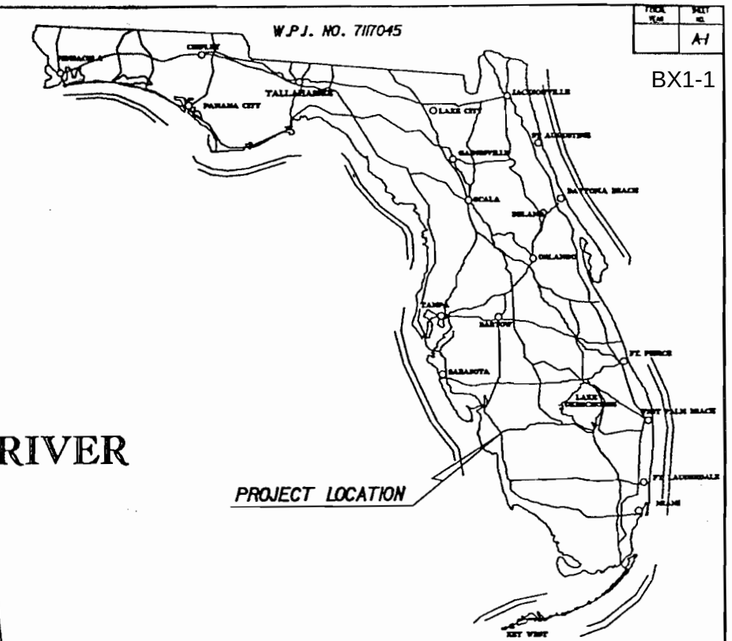

INDEX OF STRUCTURE PLANS

SHEET NO.	SHEET DESCRIPTION
A-1	COVER SHEET
A-2	INDEX OF DRAWINGS
A-3	12", 14", 18", 20", 24" AND 30" PRE-STRESSED CONCRETE PILES (INDEX NO. 600, SHEET 1 OF 2)
A-4	12", 14", 18", 20", 24" AND 30" PRE-STRESSED CONCRETE PILES (INDEX NO. 600, SHEET 2 OF 2)
A-5	TRAFFIC RAILING BARRIER (INDEX NO. 700)
A-6	STANDARD BAR BENDING DETAILS
C-1 THRU C-144	BRIDGE DRAWINGS

SEE SHEET A-2 FOR INDEX OF BRIDGE DRAWINGS.

BRIDGE PLANS

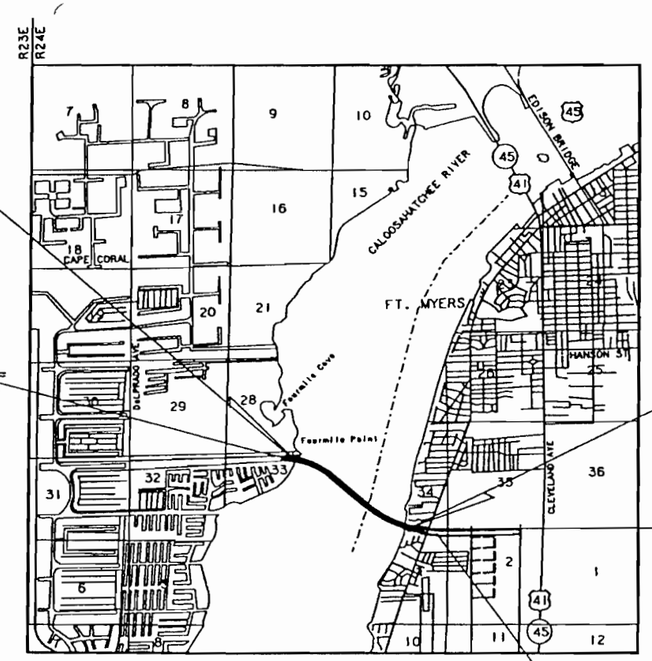

BEGIN BRIDGE
STA. 2114+27.08

STATION EQUATION
STA. 1114+27.08 BK=
STA. 2114+27.08 AH

END BRIDGE
STA. 2185+98.75

STATION EQUATION
STA. 2185+98.75 BK=
STA. 3186+28.17 AH

0 3000'

ENGINEER OF RECORD

Richard E. Jarrett

R E Jarrett 3/3/95

PLANS PREPARED BY

Greiner
GREINER, INC.

CONSULTING ENGINEERS TAMPA, FLORIDA
P.O. BOX 31646
TAMPA, FLORIDA 33631-3416

THIS SEAL APPLIES TO THESE PROJECT DRAWINGS AS THEY EXISTED ON _____ AND DOES NOT APPLY TO OR CERTIFY THE ACCURACY OF REVISIONS MADE BY OTHERS AFTER THAT DATE.

ATTENTION IS DIRECTED TO THE FACT THAT THESE PLANS MAY HAVE BEEN REDUCED IN SIZE BY REPRODUCTION. THIS MUST BE CONSIDERED WHEN OBTAINING SCALED DATA.

GOVERNING SPECIFICATIONS: STATE OF FLORIDA, DEPARTMENT OF TRANSPORTATION, STANDARD SPECIFICATIONS FOR ROAD AND BRIDGE CONSTRUCTION DATED 1991 AND SUPPLEMENTS THERETO IF NOTED IN THE SPECIAL PROVISIONS FOR THIS PROJECT.

124096

REVISIONS		
DATE	BY	DESCRIPTION

STRUCTURE PLANS APPROVED BY: _____

DATE: _____

P.E. NO.: _____

Conformed

124096

PLOTTED: 27JAN95-09.25.40

FKEYSKIT

W:\KOAN7\C25000.DJ00.FG\BKEY\WPOL.FGB

PROJECT NO	SHEET NO
5896	A-1

BX1-2

PLAN OF PROPOSED
COUNTY ROAD NO. 884

LEE COUNTY CONTRACT NO. C861114

PROJECT NO. 5896

BID PACKAGE 2

MIDPOINT CORRIDOR PROJECT

MIDPOINT CORRIDOR OVER CALOOSAHATCHEE RIVER

VECP BRIDGE PLANS

MODIFIED FROM GREINER'S PLANS (INCLUDED)

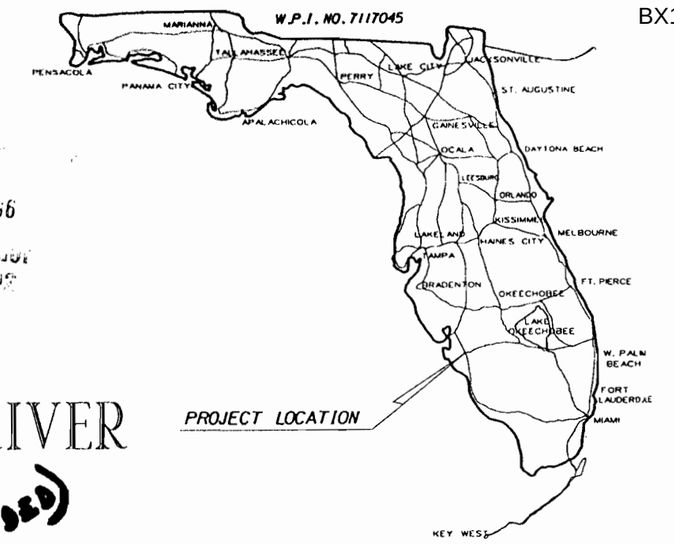

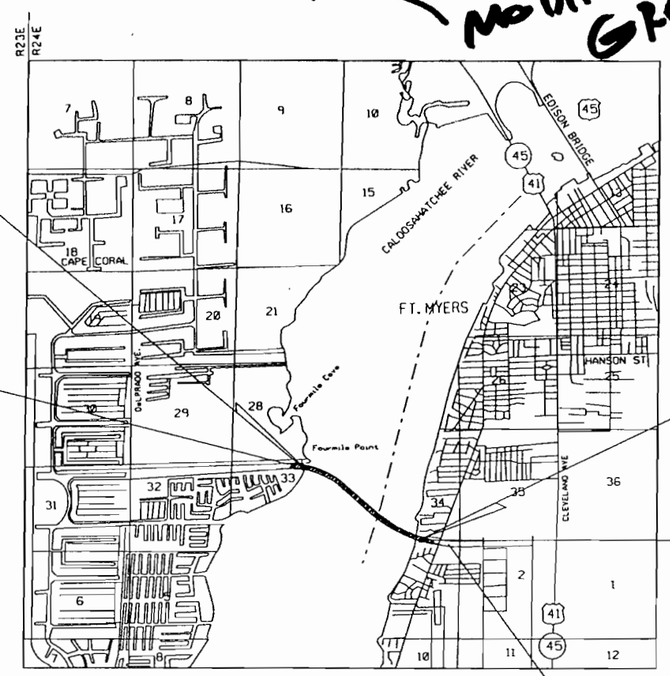

BEGIN BRIDGE
STA. 2114+27.08

STATION EQUATION
STA. 1114+27.08 BK=
STA. 2114+27.08 AH

END BRIDGE
STA. 2185+98.75

STATION EQUATION
STA. 2185+98.75 BK=
STA. 3186+28.17 AH

0 3000'

124096

FINLEY McNARY/JANSSEN SPAANS
a Joint Venture

Finley McNary Engineers, Inc
1391 Timberlane Road Suite 200
Tallahassee, Florida 32312-1721

Janssen & Spaans Engineers, Inc.
2825 East 56th Street
Indianapolis, Indiana 46220

REVISIONS											
DATE	BY	DESCRIPTION	DATE	BY	DESCRIPTION	DATE	BY	DESCRIPTION	DATE	BY	

	NAME	DATE
DR. BY	J.L.S.	5/96
CHK. BY	C.W.N.	5/96
SUPV.	H.D.R.	5/96

FINLEY McNARY/JANSSEN SPAANS

BOARD OF COUNTY COMMISSIONERS
LEE COUNTY, FLORIDA
DEPARTMENT OF TRANSPORTATION

MIDPOINT BRIDGE
COVER SHEET

124096

INDEX OF DRAWINGS

SHEET NO.	SHEET DESCRIPTION
A-1	COVER SHEET
A-2A	INDEX OF DRAWINGS
A-3	12", 14", 18", 20", 24", AND 30" PRE-STRESSED CONCRETE PILES (FDOT INDEX NO. 600, SHEET 1 OF 2)
A-4	12", 14", 18", 20", 24", AND 30" PRE-STRESSED CONCRETE PILES (FDOT INDEX NO. 600, SHEET 2 OF 2)
A-5	TRAFFIC RAILING BARRIER (FDOT INDEX NO. 700)
A-6	STANDARD BAR BENDING DETAILS
C-1A	GENERAL NOTES (1)
C-2A	GENERAL NOTES (2)
C-3A	GENERAL NOTES (3)
C-4A	SUMMARY OF ESTIMATED QUANTITIES
C-5A	PLAN & ELEVATION (1)
C-6	PLAN & ELEVATION (2)
C-7A	PLAN & ELEVATION (3)
C-8A	PLAN & ELEVATION (4)
C-9A	PLAN & ELEVATION (5)
C-10A	PLAN & ELEVATION (6)
C-11	PLAN & ELEVATION (7)
C-12	BRIDGE HYDRAULIC RECOMMENDATIONS
C-13	BORING LOCATION PLAN
C-14	REPORT OF CORE BORINGS (1)
C-15	REPORT OF CORE BORINGS (2)
C-16	REPORT OF CORE BORINGS (3)
C-17	REPORT OF CORE BORINGS (4)
C-18	REPORT OF CORE BORINGS (5)
C-19	REPORT OF CORE BORINGS (6)
C-20	REPORT OF CORE BORINGS (7)
C-21	FOUNDATION NOTES
C-22	FOUNDATION LAYOUT (1)
C-23	FOUNDATION LAYOUT (2)
C-24	FOUNDATION LAYOUT (3)
C-25	FOUNDATION LAYOUT (4)
C-26	FOUNDATION LAYOUT (5)
C-27	FOUNDATION LAYOUT (6)
C-28	FOUNDATION LAYOUT (7)
C-29	END BENT 1
C-30	END BENT 64
C-31	END BENT DETAILS
C-32	PIERS 2 THRU 16 AND 56 THRU 63
C-33	PIERS 17 THRU 31
C-34	PIER DETAILS - PIERS 2 THRU 31 AND 56 THRU 63
C-35A	PIERS 32 AND 55
C-36A	PIER DETAILS - PIERS 32 AND 55
C-37A	PIERS 33,34,36,37,39,40,41,46,47,48,50,51,53 AND 54
C-37A2	PIERS 35,38,49 AND 52
C-38A	PIER DETAILS - PIERS 33 THRU 41 AND 46 THRU 54
C-39A	PIERS 42 AND 45
C-40A	PIERS 43 AND 44
C-41A	PIER DETAILS - PIERS 42 THRU 45
C-42A	SHEAR KEY AND PEDESTAL DETAILS - PIERS 33 THRU 41 AND 46 THRU 54
C-42A2	SHEAR KEY AND PEDESTAL DETAILS - PIERS 42 THRU 45
C-43	PEDESTAL ELEVATIONS (1)
C-44A	PEDESTAL ELEVATIONS (2)
C-45A	PEDESTAL ELEVATIONS (3)
C-46A	PEDESTAL ELEVATIONS (4)
C-47	FOOTING DETAILS - PIERS 32 AND 55
C-48	FOOTING DETAILS - PIERS 33 THRU 36 AND 51 THRU 54
C-49	FOOTING DETAILS - PIERS 37 THRU 40 AND 47 THRU 50
C-50	FOOTING DETAILS - PIERS 41 THRU 46
C-51	FINISH GRADE ELEVATIONS (1)
C-52	FINISH GRADE ELEVATIONS (2)
C-53A	FINISH GRADE ELEVATIONS (3)
C-54A	FINISH GRADE ELEVATIONS (4)
C-55	FINISH GRADE ELEVATIONS (5)
C-56	FINISH GRADE ELEVATIONS (6)
C-57	FINISH GRADE ELEVATIONS (7)
C-58	FINISH GRADE ELEVATIONS (8)
C-59A	FINISH GRADE ELEVATIONS (9)
C-60A	FINISH GRADE ELEVATIONS (10)
C-61A	FINISH GRADE ELEVATIONS (11)
C-62A	FINISH GRADE ELEVATIONS (12)
C-63A	FINISH GRADE ELEVATIONS (13)
C-64	SUPERSTRUCTURE PLANS - SPANS 1 THRU 11
C-65	SUPERSTRUCTURE PLANS - SPAN 12 THRU 31
C-66A	SUPERSTRUCTURE PLANS - SPAN 32 THRU 41 AND 45 THRU 54
C-67A	SUPERSTRUCTURE PLANS - SPANS 42 THRU 44
C-68	SUPERSTRUCTURE PLANS - SPANS 55 THRU 63
C-69	SUPERSTRUCTURE SECTIONS - SPANS 1 THRU 31 AND 55 THRU 63
C-70	MISCELLANEOUS SUPERSTRUCTURE DETAILS -SPANS 1 THRU 31 AND 55 THRU 63
C-71A	SUPERSTRUCTURE SECTIONS - SPANS 32 THRU 41 AND 45 THRU 54
C-72A	SUPERSTRUCTURE SECTIONS - SPANS 42 THRU 44
C-73A	MISCELLANEOUS SUPERSTRUCTURE DETAILS (1) - SPANS 32 THRU 41 AND 45 THRU 54
C-73A2	MISCELLANEOUS SUPERSTRUCTURE DETAILS (2) - SPANS 42 THRU 44
C-74A	MISCELLANEOUS SUPERSTRUCTURE DETAILS (3) - SPANS 32 THRU 54
C-74A2	SUPERSTRUCTURE ESTIMATED QUANTITIES
C-75	FRAMING PLAN (1)
C-76	FRAMING PLAN (2)
C-77A	FRAMING PLAN (3)
C-78A	FRAMING PLAN (4)
C-79A	FRAMING PLAN (5)
C-80A	FRAMING PLAN (6)
C-81	FRAMING PLAN (7)
C-82	AASHTO TYPE IV BEAMS - TYPICAL BEAM & STRAND PATTERN
C-83	TYPICAL NOTES & DETAILS FOR AASHTO TYPE IV PRESTRESSED BEAMS
C-84	PRESTRESSED BEAMS AASHTO TYPE IV TABLE OF BEAM VARIABLES (1)
C-85	PRESTRESSED BEAMS AASHTO TYPE IV TABLE OF BEAM VARIABLES (2)
C-86	PRESTRESSED BEAMS AASHTO TYPE IV TABLE OF BEAM VARIABLES (3)
C-87	PRESTRESSED BEAMS AASHTO TYPE IV TABLE OF BEAM VARIABLES (4)
C-88A	HIGH LEVEL APPROACH UNIT 72" FBT - END SPAN
C-89A	HIGH LEVEL APPROACH UNIT 72" FBT - INTERIOR SPAN
C-90A	HIGH LEVEL APPROACH UNIT 72" FBT - BEAM DETAILS
C-91A	MAIN SPAN UNIT - END SEGMENT
C-92A	MAIN SPAN UNIT - HAUNCH SEGMENT
C-93A	MAIN SPAN UNIT - DROP-IN-SEGMENT
C-94A	MAIN SPAN UNIT - TENDON LAYOUT
C-95A	MAIN SPAN UNIT BEAM DETAILS (1)
C-98A	MAIN SPAN UNIT ERECTION SEQUENCE
C-99A	HIGH LEVEL APPROACH UNIT CAMBER DIAGRAMS
C-100A	MAIN SPAN UNIT CAMBER DIAGRAM
C-101A	BEARING DETAILS (1)
C-102A	BEARING DETAILS (2)
C-103A	BEARING DETAILS (3)
C-104A	EXPANSION JOINT DETAILS (1)
C-105A	EXPANSION JOINT DETAILS (2)
C-106	LIGHT POLE MOUNTING DETAILS
C-107A	DECK DRAIN DETAILS (1)
C-108A	DECK DRAIN DETAILS (2)
C-109A	ACCESS LADDER DETAILS
C-110	ACCESS LADDER PLATFORM DETAILS
C-111	FENDER SYSTEM
C-112	FENDER SYSTEM DETAILS (1)
C-113	FENDER SYSTEM DETAILS (2)
C-114	NAVIGATION LIGHT SYSTEM DETAILS (FDOT INDEX NO. 510-DRWG 1)
C-115	NAVIGATION LIGHT SYSTEM DETAILS
C-116	REINFORCING BAR LIST (1)
C-117	REINFORCING BAR LIST (2)
C-118	REINFORCING BAR LIST (3)
C-119	REINFORCING BAR LIST (4)
C-120A	REINFORCING BAR LIST (5)
C-121A	REINFORCING BAR LIST (6)
C-122A	REINFORCING BAR LIST (7)
C-123A	REINFORCING BAR LIST (8)
C-124A	REINFORCING BAR LIST (9)
C-125A	REINFORCING BAR LIST (10)
C-126A	REINFORCING BAR LIST (11)
C-127A	REINFORCING BAR LIST (12)
C-128A	REINFORCING BAR LIST (13)
C-129A	REINFORCING BAR LIST (14)
C-130A	REINFORCING BAR LIST (15)
C-131A	REINFORCING BAR LIST (16)
C-132A	REINFORCING BAR LIST (17)
C-133A	REINFORCING BAR LIST (18)
C-134A	REINFORCING BAR LIST (19)
C-135A	REINFORCING BAR LIST (20)
C-136A	REINFORCING BAR LIST (21)
C-137A	REINFORCING BAR LIST (22)
C-138A	REINFORCING BAR LIST (23)
C-139A	REINFORCING BAR LIST (24)
C-140A	REINFORCING BAR LIST (25)
C-141A	REINFORCING BAR LIST (26)
C-142	REINFORCING BAR LIST (27)
C-143A	REINFORCING BAR LIST (28)
C-144A	REINFORCING BAR LIST (29)

6 MAY 96

FINLEY McNARY/JANSSEN SPAANS
a Joint Venture

Finley McNary Engineers, Inc
1391 Timberlane Road Suite 200
Tallahassee, Florida 32312-1721

Janssen & Spaans Engineers, Inc.
2825 East 56th Street
Indianapolis, Indiana 46220

REVISIONS

DATE	BY	DESCRIPTION	DATE	BY	DESCRIPTION	DATE	BY	DESCRIPTION	DATE	BY

	NAME	DATE
DR. BY	J.L.S.	5/96
CHK. BY	C.W.N.	5/96
SUPV.	H.D.R.	5/96

FINLEY McNARY/JANSSEN SPAANS

BOARD OF COUNTY COMMISSIONERS
LEE, COUNTY, FLORIDA
DEPARTMENT OF TRANSPORTATION

MIDPOINT BRIDGE
INDEX OF DRAWINGS

FED. ROAD DIV. NO.	STATE	PROJECT NO.	FISCAL YEAR	SHEET NO.
3	FLA.	5896		A-3

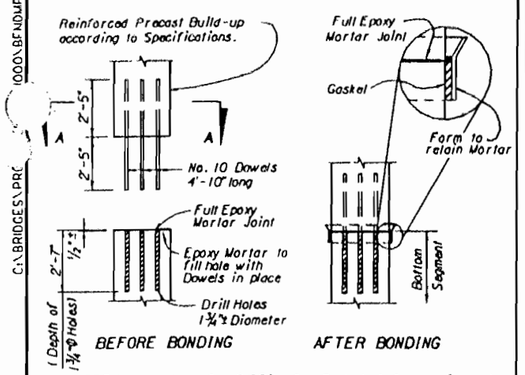

NOTE: Dowels shown for 24" Pile. See Sect. A-A for spacing and number of Dowels for each Pile.

REINFORCED PRECAST SPLICES
(Extensions 2' Min. but less than 5') (Not Drivable)

TABLE OF BONDED SPLICE DATA		
Drivable Splice	Min. Splice Length	No. 10 Dowel Length
YES	10'-0"	7'-5"
NO *	5'-0"	4'-10"

* For Splices less than 5'-0" (not Drivable), use the Reinforced Precast Splice.

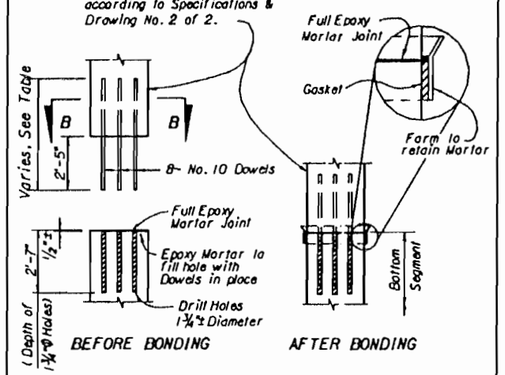

NOTE: Dowels shown for 24" Pile. See SECTION B-B for spacing & Number of Dowels for each Pile.

PRESTRESSED PRECAST SPLICES
(Extensions 5' or longer)

* For actual prestressing strand pattern, see Drawing 2 of 2.

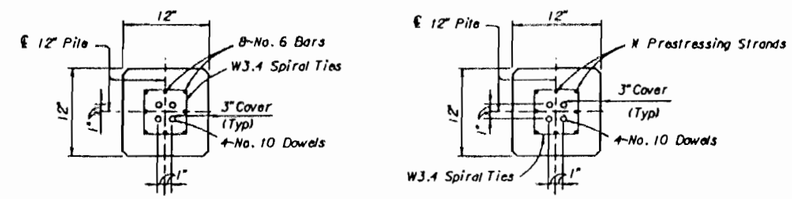

SECTION A-A
(See Reinf. Precast Splice Detail)

SECTION B-B
(See Prstr. Precast Splice Detail)

12" PILE

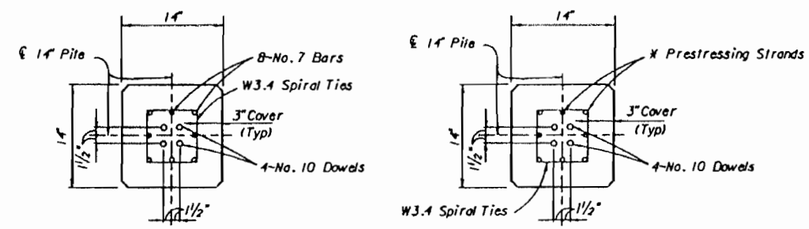

SECTION A-A
(See Reinf. Precast Splice Detail)

SECTION B-B
(See Prstr. Precast Splice Detail)

14" PILE

PILE NOTES

BX1-4

SPIRAL TIES: Each wrap of spirals shall be tied to at least two corner strands or bars. One turn required for spiral splices. Spirals shall be manufactured from cold-drawn steel wire meeting the requirements of ASTM A 82.

PILE CUT OFF: Piles required to be cut off shall be sawcut at the pile cut off elevation shown on the plans with an abrasive saw. Unless otherwise noted on the plans, the cut shall be made to the depth into the pile necessary to cleanly cut through the prestressing strands.

CONCRETE CLASS: Concrete for all piles shall be Class V (Special). Class V (Special) Concrete shall conform to all requirements for Class V Concrete except for the 28-day strength as noted below.

CONCRETE STRENGTH: The cylinder strength shall be 6,000 p.s.i. minimum at 28 days and 4,000 p.s.i. minimum at transfer of the Prestressing Force.

SPLICED PILES: Piles may be spliced in accordance with Section 455-5.12 of the standard specifications. Precast buildups shall be prestressed or reinforced according to pile details for the "head" section of the pile shown on this Standard. Drivable spliced piles may be driven after splice is two days old.

PICK-UP POINTS: Piles shall be marked at the pick-up points to indicate proper points for attaching handling lines.

STORAGE AND TRANSPORTATION: Piles shall be supported on adequate dunnage both in the precasting yard and at the jobsite and shall be supported and tied down during transit in accordance with the following schedule:

Type Pickup Required by Pile Length	Type Storage and Transportation Support Detail
Single or Double	2, 3 or 4 Point Support
Triple	3 or 4 Point Support

REINFORCING STEEL: All Reinforcing Steel except spiral ties shall be Grade 60.

STRAND NOMENCLATURE:
S.R. = Stress Relieved Strand
L.R.S. = Low-Relaxation Strand

DETAILS FOR REINFORCED PRECAST & PRESTRESSED PRECAST PILE SPLICES

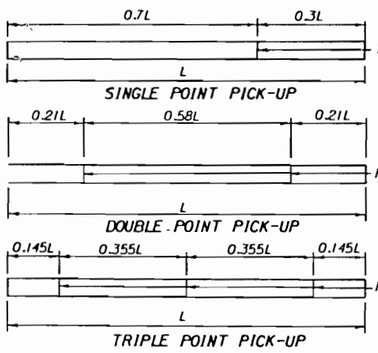

PILE PICK-UP DETAILS

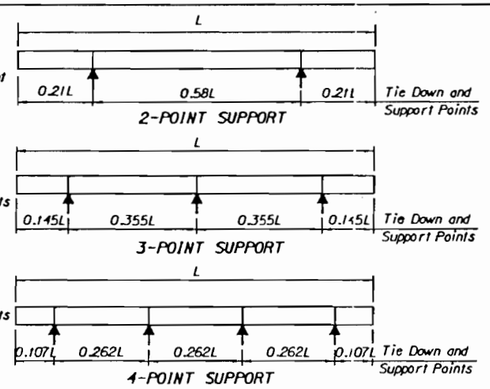

STORAGE AND TRANSPORTATION SUPPORT DETAILS

PILE SIZE	MAX. LENGTH "L" FOR PICK-UP		
	SINGLE POINT	DOUBLE POINT	TRIPLE POINT
12"	50'	70'	L > 70'
14"	55'	75'	L > 75'
18"	60'	90'	L > 90'
20"	65'	95'	L > 95'
24"	70'	100'	L > 100'
30"	90'	125'	L > 125'

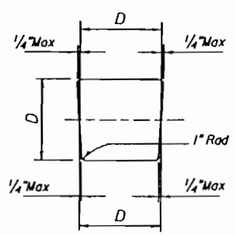

TYPICAL PILE SHAPE FOR MOLD FORMS

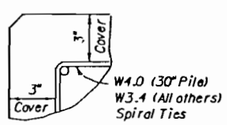

TYPICAL DETAIL SHOWING COVER DIMENSION

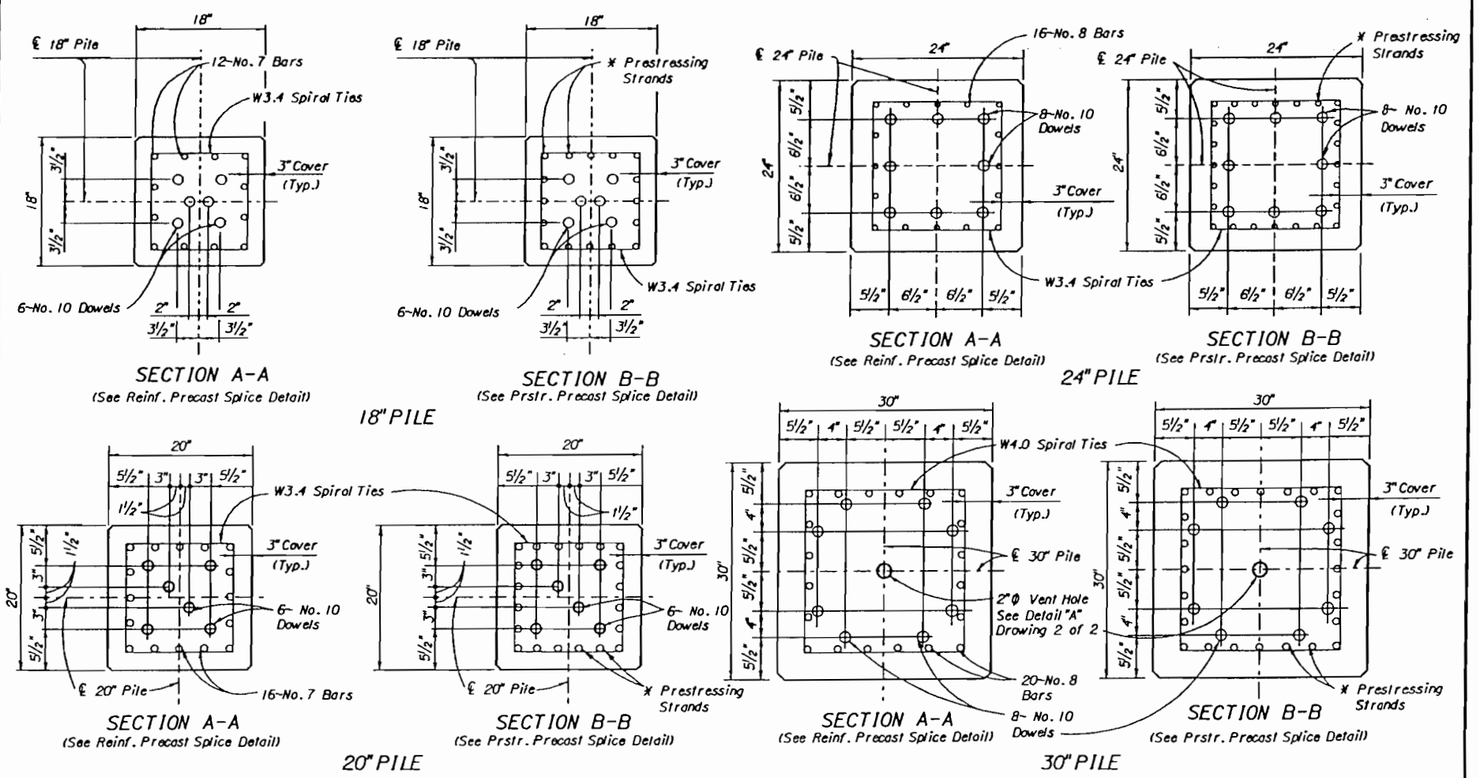

REVISIONS					
Date	By	Description	Date	By	Description
			92R		

	Names	Dates
Drawn by	TGA	1-91
Checked by	AJG	5-91
Designed by		
Checked by		
Approved by	NICHOLS/AJG	

ENGINEER OF RECORD:
STRUCTURES DESIGN OFFICE
CENTRAL OFFICE
605 Suwannee Street, MS 33
Tallahassee, Florida 32399-0450

LOGO:

SEAL:

FLORIDA DEPARTMENT OF TRANSPORTATION
STRUCTURES DESIGN OFFICE

ROAD NO.	COUNTY	PROJECT NO.
884	LEE	5896

SHEET TITLE: 12", 14", 18", 20", 24", AND 30" PRESTRESSED CONCRETE PILES

PROJECT NAME: MIDPOINT BRIDGE

Drawing No. 1 of 2

Index No. 600

C:\BRIDGES\PRC\000\BFNDMPOLDGN

FED. ROAD DIV. NO.	STATE	PROJECT NO.	FINCH YEAR	SHEET NO.
3	FLA.	5896		A-4

BX1-5

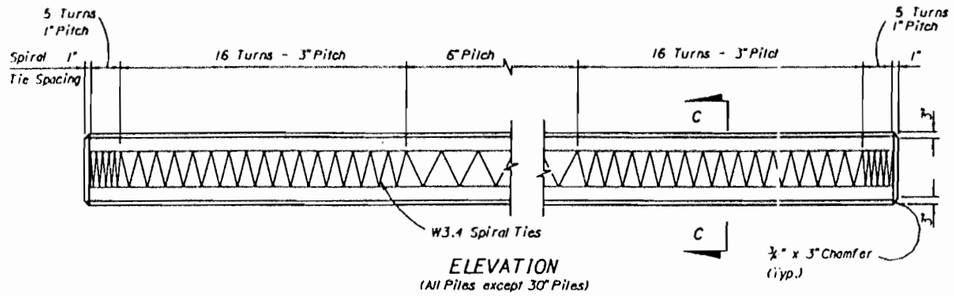

ELEVATION
(All Piles except 30" Piles)

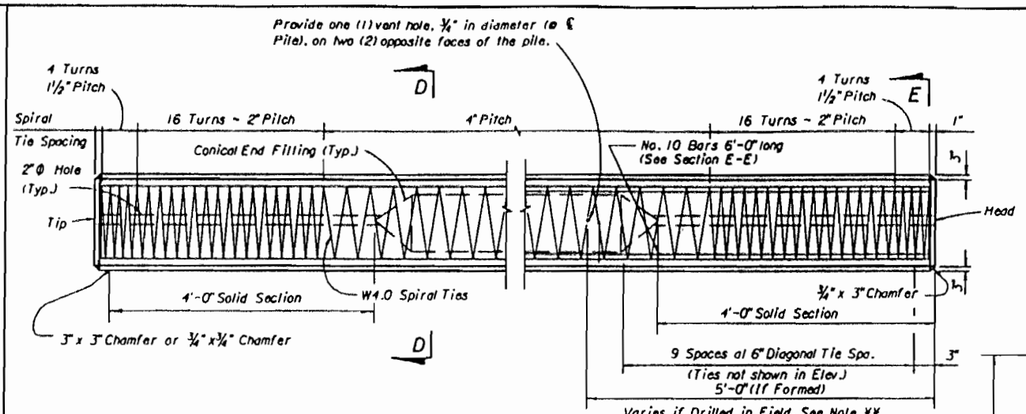

ELEVATION
(30" Piles)

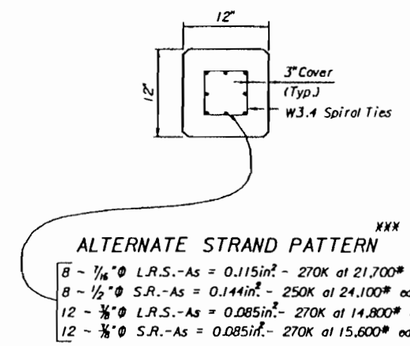

ALTERNATE STRAND PATTERN ***

8 ~ 7/16"Φ L.R.S.-As = 0.115in.² - 270K at 21,700# ea.
8 ~ 1/2"Φ S.R.-As = 0.144in.² - 250K at 24,100# ea.
12 ~ 3/8"Φ L.R.S.-As = 0.085in.² - 270K at 14,800# ea.
12 ~ 3/8"Φ S.R.-As = 0.085in.² - 270K at 15,600# ea.

SECTION C-C
12" PILE

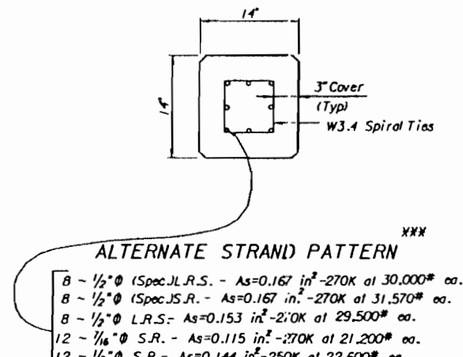

ALTERNATE STRAND PATTERN ***

8 ~ 1/2"Φ (Spec.)L.R.S. - As=0.167 in.² -270K at 30,000# ea.
8 ~ 1/2"Φ (Spec.)S.R. - As=0.167 in.² -270K at 31,570# ea.
8 ~ 1/2"Φ L.R.S.- As=0.153 in.² -270K at 29,500# ea.
12 ~ 7/16"Φ S.R. - As=0.115 in.² -270K at 21,200# ea.
12 ~ 1/2"Φ S.R.- As=0.144 in.² -250K at 22,600# ea.
16 ~ 3/8"Φ S.R. - As=0.085 in.² -270K at 16,070# ea.

SECTION C-C
14" PILE

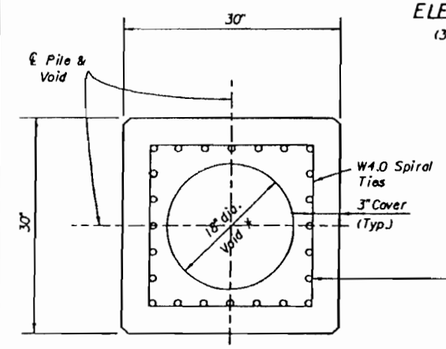

ALTERNATE STRAND PATTERN ***

20 ~ 9/16"Φ (Spec.)L.R.S. -As = 0.196 in.² - 270K at 38,600# ea.
20 ~ 9/16"Φ L.R.S. -As = 0.192 in.² - 270K at 38,880# ea.
24 ~ 1/2"Φ (Spec.)L.R.S. -As = 0.167 in.² - 270K at 32,300# ea.
24 ~ 9/16"Φ S.R. -As = 0.192 in.² - 270K at 35,000# ea.
24 ~ 9/16"Φ (Spec.)S.R. -As = 0.196 in.² - 270K at 35,200# ea.
28 ~ 1/2"Φ L.R.S. -As = 0.153 in.² - 270K at 28,100# ea.
28 ~ 1/2"Φ (Spec.)S.R. -As = 0.167 in.² - 270K at 30,200# ea.

* Omit Void at Ends, see Elevation View

SECTION D-D
30" PILE

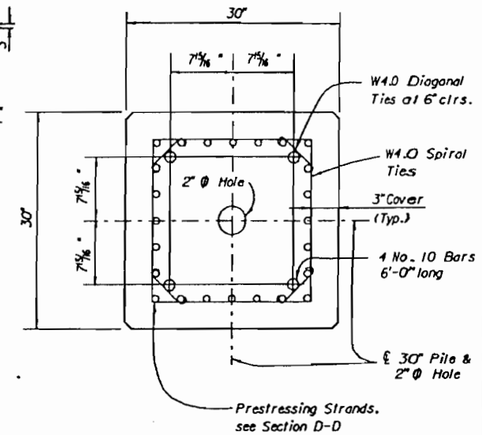

SECTION E-E
30" PILE

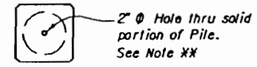

DETAIL "A"

** NOTE:
The 18" Φ Void in the pile shall be positively vented to water or air after the final pile installation. If the 3/4" Φ vents are included in the pile cut-off section, two (2) new holes, 3/4" in diameter, shall be drilled on two (2) opposite faces of the pile below the bottom of substructure elevation. If the pile void can not be vented directly to water or air, then venting shall be provided by the use of a 1" Φ P.V.C. conduit through the 2" Φ hole(s) or the the 18" Φ void to the outside. This might involve venting through a substructure cap or column. Voids between segments of spliced piles shall be connected by 2" Φ hole(s). See Detail "A".

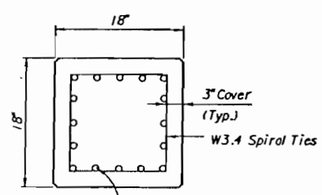

ALTERNATE STRAND PATTERN ***

12 ~ 1/2"Φ (Spec.)L.R.S. -As = 0.167 in.² - 270K at 32,400# ea.
12 ~ 9/16"Φ S.R. -As = 0.192 in.² -270K at 35,100# ea.
16 ~ 1/2"Φ S.R. -As = 0.153 in.² -270K at 26,800# ea.
20 ~ 7/16"Φ L.R.S.-As = 0.115 in.² -270K at 20,000# ea.
20 ~ 7/16"Φ S.R.-As = 0.115 in.² -270K at 21,100# ea.
24 ~ 3/8"Φ L.R.S.-As = 0.085 in.² -270K at 16,300# ea.

SECTION C-C
18" PILE

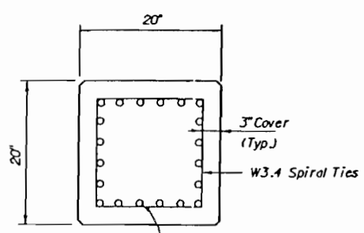

ALTERNATE STRAND PATTERN ***

16 ~ 1/2"Φ L.R.S. -As = 0.153 in.² -270K at 30,000# ea.
16 ~ 1/2"Φ (Spec.)S.R. -As = 0.157 in.² -270K at 31,570# ea.
20 ~ 1/2"Φ S.R. -As = 0.153 in.² -270K at 26,500# ea.
24 ~ 7/16"Φ L.R.S.-As = 0.115 in.² -270K at 20,500# ea.
24 ~ 7/16"Φ S.R.-As = 0.115 in.² -270K at 21,740# ea.

SECTION C-C
20" PILE

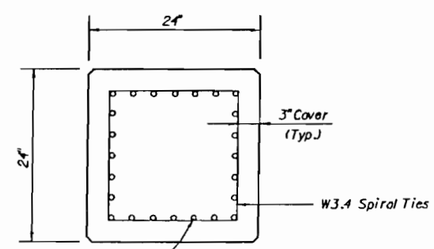

ALTERNATE STRAND PATTERN ***

20 ~ 1/2"Φ (Spec.)L.R.S. -As = 0.167 in.² - 270K at 33,820# ea.
20 ~ 9/16"Φ S.R. -As = 0.192 in.² - 270K at 36,290# ea.
20 ~ 9/16"Φ (Spec.)S.R. -As = 0.196 in.² - 270K at 37,050# ea.
24 ~ 1/2"Φ L.R.S. -As = 0.153 in.² - 270K at 29,000# ea.
24 ~ 1/2"Φ (Spec.)S.R. -As = 0.167 in.² - 270K at 31,570# ea.

SECTION C-C
24" PILE

*** NOTE:
Any of the given Alternate Strand Patterns may be utilized. The strands shall be located as follows: place one strand at each corner and place the remaining strands equally spaced between the corner strands.
The Total strand pattern shall be concentric with the nominal concrete section of the pile.

REVISIONS					
Date	By	Description	Date	By	Description
			92R		

	Names	Dates
Drawn by	TGA	1-91
Checked by	AJG	5-91
Designed by		
Checked by		
Approved by	NICHOLS/AJG	

ENGINEER OF RECORD:
STRUCTURES DESIGN OFFICE
CENTRAL OFFICE
605 Suwannee Street, MS 33
Tallahassee, Florida 32399-0450

LOGO:

SEAL:

FLORIDA DEPARTMENT OF TRANSPORTATION
STRUCTURES DESIGN OFFICE

ROAD NO.	COUNTY	PROJECT NO.
884	LEE	5896

SHEET TITLE: 12", 14", 18", 20", 24", AND 30" PRESTRESSED CONCRETE PILES

PROJECT NAME: MIDPOINT BRIDGE

Drawing No. 2 of 2

Index No. 600

PROJECT NO.	SHEET NO.
5896	A-5

BX1-6

(※) NOTE: See Superstructure Drawings for actual dimensions and joint orientation.

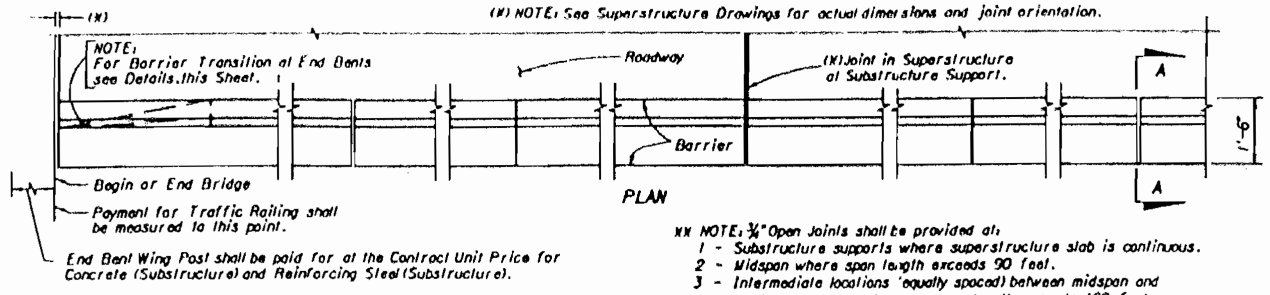

PLAN

※※ NOTE: ¾" Open Joints shall be provided at:
1 - Substructure supports where superstructure slab is continuous.
2 - Midspan where span length exceeds 90 feet.
3 - Intermediate locations 'equally spaced' between midspan and substructure support where span length exceeds 180 feet.

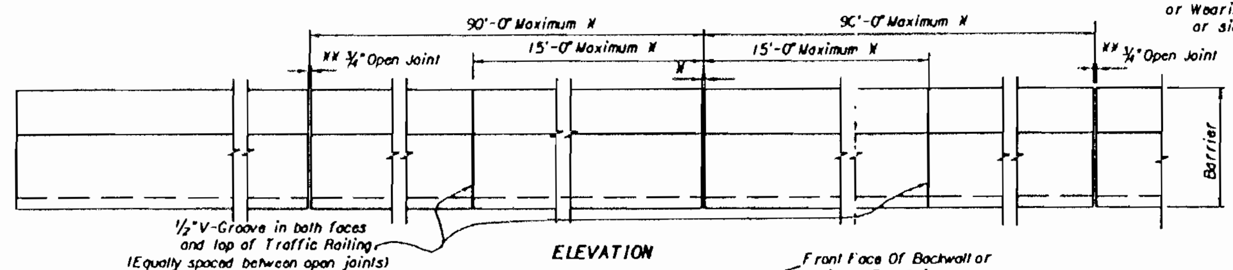

ELEVATION

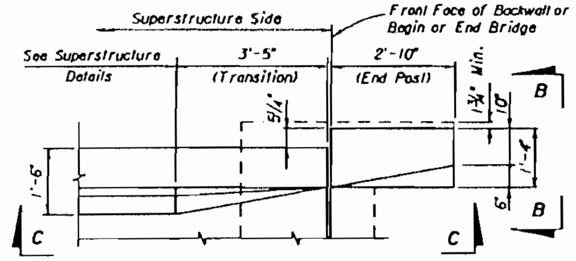

PLAN
(See Note 'A')

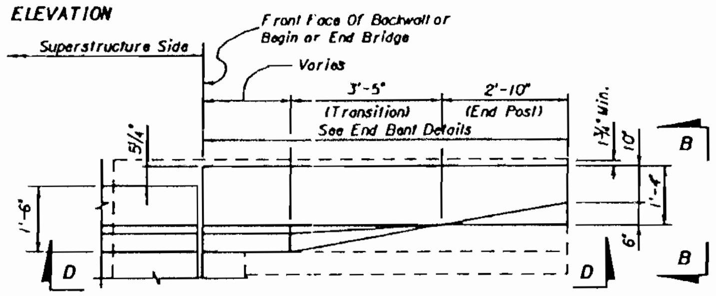

PLAN
(See Note 'B')

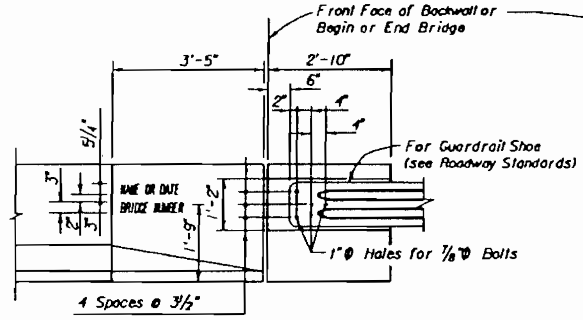

VIEW C-C

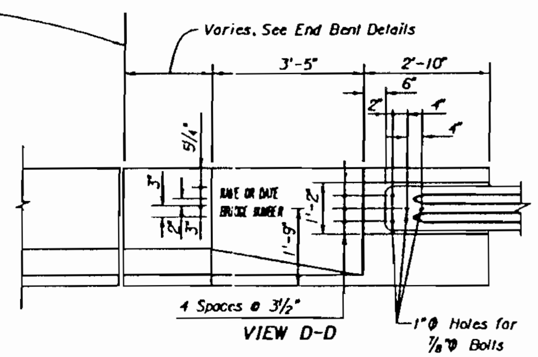

VIEW D-D

NOTE 'A':
If Barrier Transition is required and the Superstructure Depth (thickness) is 25 inches or less, the Transition shall be provided on the Superstructure side. To accommodate the Transition on the Superstructure the Reinforcement (Bars 5V, 5P & 4S) will need adjusting. The 1'-2" portion of Bars 5V shall be bent to fit and the horizontal 10" portion along the bottom shall be cut at the center.

NOTE 'B':
If Barrier Transition is required and the Superstructure Depth (thickness) exceeds 25 inches, the Barrier Transition shall be provided on the End Bent side.

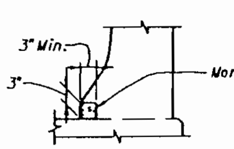

SECTION A-A

NOTE: When open joint in Barrier is not coincident with joint in the superstructure, the lower 3" portion of the open joint shall be plugged by filling with mortar in accordance with Article 400-15.1.

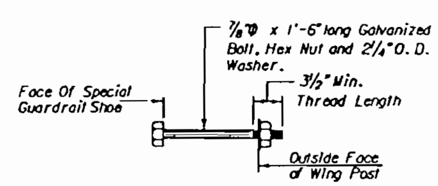

BOLT DETAIL
NOTE: The Cost of Bolts is to be included in the Contract Unit Price for Guardrail

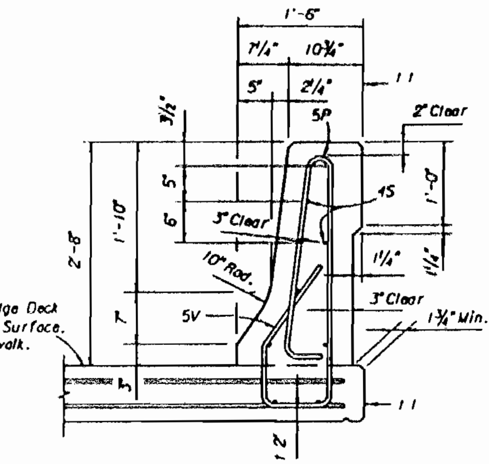

TYPICAL SECTION THRU TRAFFIC RAILING

† For Slabs 8" thick or less. If Slab is thicker than 8" or Barrier is located on a Retaining Wall, embed Bar 5V 6".

† † Where Barriers of adjacent bridges are to be built back to back, the outside vertical plane of the Barrier and Slab may coincide if so shown on the Superstructure Plans.

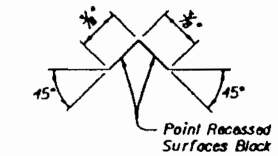

SECTION THRU RECESSED 'V' GROOVE TO FORM INSCRIBED LETTERS AND FIGURES

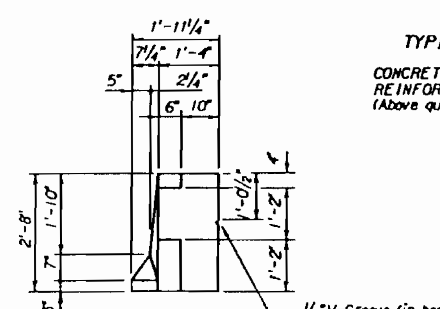

VIEW B-B

ROADWAY CROSS-SLOPE	LOW GUTTER ϕ1	LOW GUTTER ϕ2	HIGH GUTTER ϕ1	HIGH GUTTER ϕ2
0.00 to 0.02	90°	90°	90°	90°
0.02+ to 0.06	93°	87°	87°	93°
0.06+ to 0.10	96°	84°	84°	96°

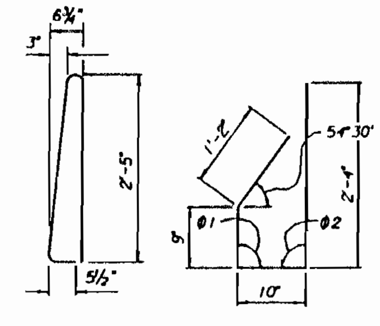

BAR 5P BAR 5V

BENDING DIAGRAMS

BAR BENDING NOTES

1. All bar dimensions in the bending diagrams are out to out.
2. Bars 5P and 5V shall be bent around a pin diameter = 2½".
3. The 9" and the 2'-4" vertical dimensions shown for bar 5V are based on a bridge slab 8" thick or greater and without raised sidewalk or wearing surface. If the slab thickness is less than 8" decrease these dimensions by an amount equal to the difference in the thicknesses; and if a wearing surface or a raised sidewalk is to be provided, increase the dimensions by an amount equal to the wearing surface thickness or sidewalk thickness.
4. Reinforcement for Barrier on Retaining Wall shall be the same as detailed above for an 8" slab with ϕ1 = ϕ2 = 90°.

TYPICAL TRAFFIC RAILING QUANTITIES

CONCRETE: 0.1030 C.Y. per linear foot.
REINFORCING STEEL: 20.49 lbs. per linear foot.
(Above quantities are based on 8" slab and 0.02 '/' cross-slope)

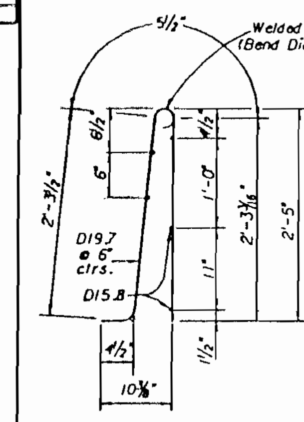

WELDED WIRE FABRIC

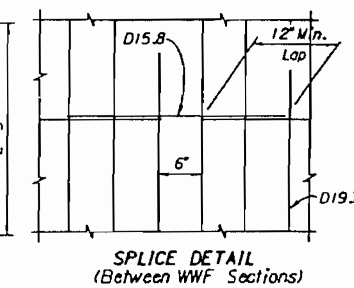

SPLICE DETAIL
(Between WWF Sections)

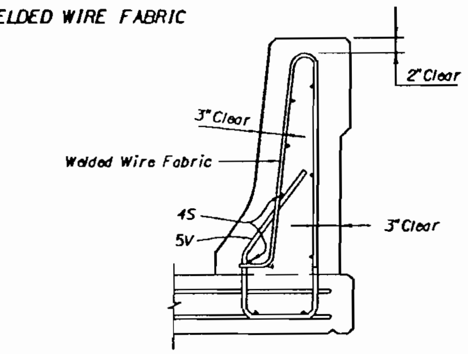

ALTERNATE REINFORCING DETAILS

The Contractor may utilize Welded Wire Fabric in lieu of all Bars 5P and Four (4) of the Bars 4S. Welded Wire Fabric shall conform to ASTM A497.

REINFORCING STEEL NOTES

Place longitudinal steel in bottom of slab as shown above to facilitate tying bars 5V. Do not add reinforcing steel for tie purposes.

All vertical reinforcing steel in Traffic Railing shall be No. 5 Bars spaced at 8" c.c. and all longitudinal reinforcing steel shall be No. 4 Bars. At all open joints all reinforcing shall have 2" minimum cover. At all construction joints Bars 4S may be continuous or spliced. All splices in Bars 4S shall be 1'-4" minimum.

TRAFFIC RAILING NOTES

CONCRETE AND REINFORCING STEEL: See General Notes.
PAYMENT: Traffic Railing on Bridges shall be paid for per linear foot (Item No. 400-148-1), which shall include all Concrete and Reinforcing Steel. Traffic Railing shall be measured along the centerline of the top surface of the concrete barrier.
MARKERS: Markers recording the elevation shall be placed on top of the Traffic Railing at End Bents. On bridges longer than 100 ft., one marker shall be placed at each end of the bridge. On bridges 100 ft. or less, one marker shall be placed at one end of the bridge only. Markers are to be furnished by the Florida Department of Transportation and installed by the Contractor. The cost of installing the markers shall be included in the Contract Unit Price for Traffic Railing (Barrier).
TRAFFIC RAIL CONSTRUCTION: The contractor may construct the railing by the use of stationary removable forms or by the use of slip forms without altering the rail dimensions shown above.
SUPERELEVATED BRIDGES: At the option of the Contractor, Traffic Railing and End Bent Wing Posts on superelevated bridges, may be constructed perpendicular to the roadway surface. The cost of modifications shall be at the Contractor's expense.
BOLTS: Bolts, Nuts, and Washers shall be hot dip galvanized in accordance with A.S.T.M. A-153.
RETAINING WALL: If the Barrier is to be provided on a retaining wall, the Barrier Section shall be as shown above. Other details such as transition for guardrail attachment, maximum spacing of ¾" open joint and ½" V-Groove shall also apply. See Wall Plans for Payment.
NAME AND BRIDGE NUMBER: The Name and Bridge Number to be placed on the Traffic Railing shall be seen on the driver's right when approaching bridge. The date is to be placed on the driver's left when approaching the bridge. The date shall be the year the bridge is constructed. Block plastic letters and figures 3" in height, as approved by the Engineer, may be used in lieu of letters and figures formed by ⅜" V-Grooves. V-Grooves shall be formed by preformed letters and figures.

R. Jarrett 3/3/95

REVISIONS											
DATE	BY	DESCRIPTION	DATE	BY	DESCRIPTION	DATE	BY	DESCRIPTION	DATE	BY	DESCRIPTION

	NAME	DATE
DR.BY	JLS	5-94
CHK.BY	WSO	5-94
SUPV.	REJ	5-94

Greiner
Greiner, Inc.
Engineers, Architects and Planners

BOARD OF COUNTY COMMISSIONERS
LEE COUNTY, FLORIDA
DEPARTMENT OF TRANSPORTATION

MIDPOINT BRIDGE
TRAFFIC RAILING BARRIER

C:\BRIDGES\PROJECTS\C26000\BDECWP03.DGN
FRLEECTY

PROJECT NO.	SHEET NO.
5896	A-6

BX1-7

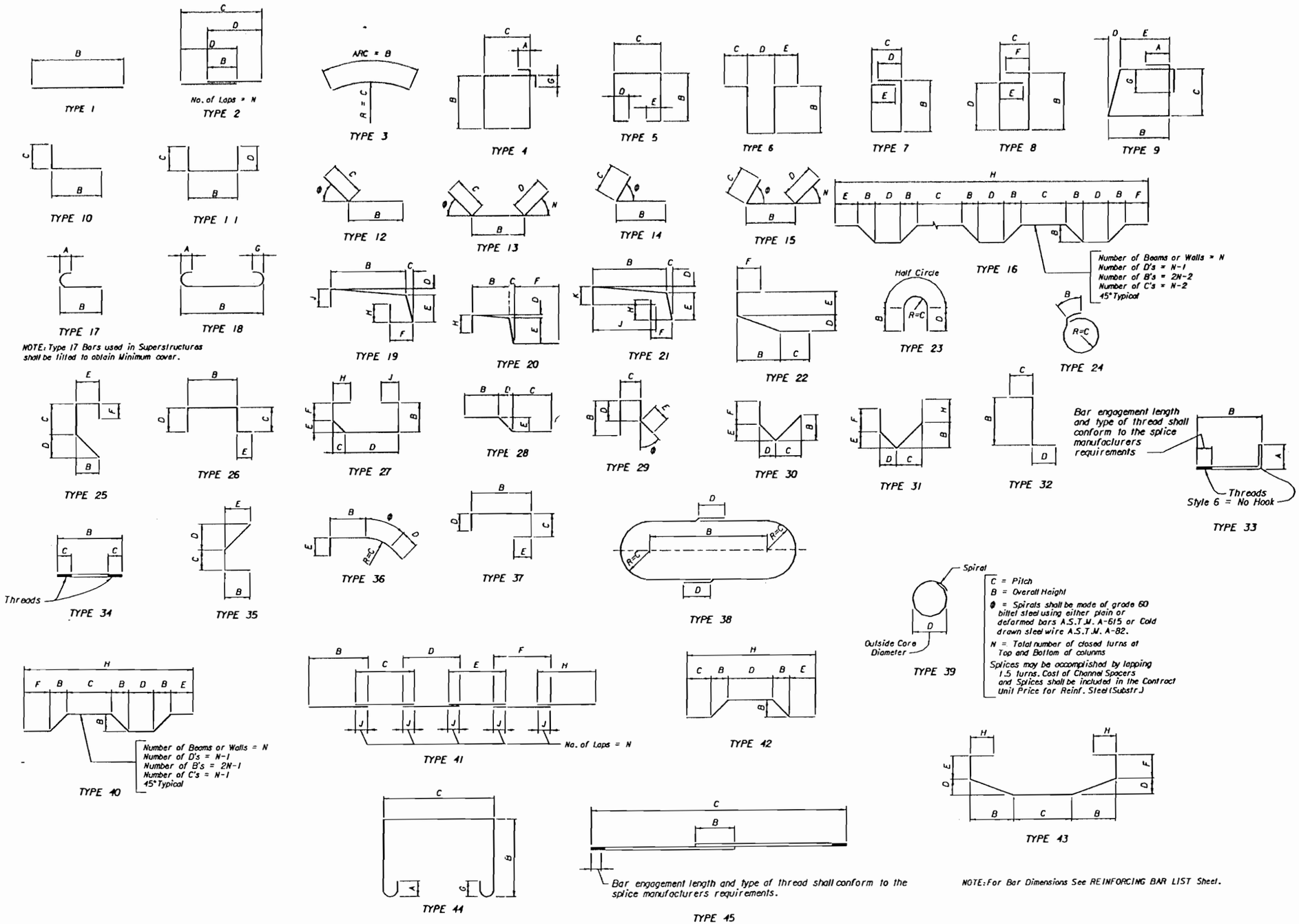

NOTE: For Bar Dimensions See REINFORCING BAR LIST Sheet.

HOOK DETAILS

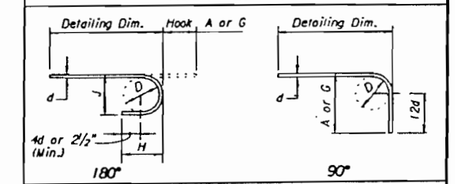

RECOMMENDED END HOOKS
ALL GRADES
D = 6d for #3 thru #8
D = 8d for #9, #10 and #11
D = 10d for #14 and #18

BAR SIZE	180° HOOKS		90° HOOKS
	A OR G	J	A OR G
#3	5"	3"	6"
#4	6"	4"	8"
#5	7"	5"	10"
#6	8"	6"	1'-0"
#7	10"	7"	1'-2"
#8	1'-1"	8"	1'-4"
#9	1'-3"	1'-1¾"	1'-7"
#10	1'-5"	1'-1¼"	1'-10"
#11	1'-7"	1'-2¾"	2'-0"
#14	2'-3"	1'-9¾"	2'-7"
#18	3'-0"	2'-4½"	3'-5"
STYLE	1		3

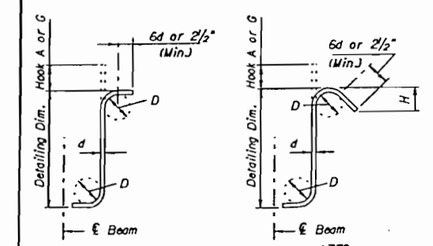

STIRRUPS
(TIES SIMILAR)

RECOMMENDED STIRRUP & TIE HOOK DIMENSIONS

BAR SIZE	D (IN.)	90° HOOKS	135° HOOKS	
		HOOK A or G	HOOK A or G	APPROX. H
#3	1½"	4"	4"	2½"
#4	2"	4½"	4½"	3"
#5	2½"	6"	5½"	3¾"
#6	4½"	1'-0"	7¾"	4½"
#7	5½"	1'-2"	9"	5¼"
#8	6"	1'-4"	10¼"	6"
STYLE		4	5	

STYLE 6 = NO HOOK

Hook Styles Detailed on this sheet are for Illustration Only.
Actual Hook Style for any particular bar will be shown under A or G Heading on REINFORCING BAR LIST sheet.
All Dimensions are out to out.

R. J. Jones 3/3/95

REVISIONS											
DATE	BY	DESCRIPTION	DATE	BY	DESCRIPTION	DATE	BY	DESCRIPTION	DATE	BY	DESCRIPTION

	NAME	DATE
DR.BY	KAC	3/94
CHK.BY	REJ	3/94
SUPV.	REJ	3/94

Greiner
Greiner, Inc.
Tampa, Florida
Engineers, Architects and Planners

BOARD OF COUNTY COMMISSIONERS
LEE COUNTY, FLORIDA
DEPARTMENT OF TRANSPORTATION

MIDPOINT BRIDGE
STANDARD BAR BENDING DETAILS

C:\BRIDGES\PROJECTS\C260000\BBARWPO.DGN

FRLEECTY

****CONSTRUCTION SPECIFICATIONS :**

1. FLORIDA DEPARTMENT OF TRANSPORTATION STANDARD SPECIFICATIONS FOR ROAD AND BRIDGE CONSTRUCTION, DATED 1991, INCLUDING THE PROJECT'S SUPPLEMENTAL SPECIFICATIONS AND SPECIAL PROVISIONS.
2. BOAT TRAFFIC SHALL BE MAINTAINED AT ALL TIMES DURING CONSTRUCTION.

****DESIGN SPECIFICATIONS :**

1. DESIGNED IN ACCORDANCE WITH THE 1992 EDITION OF THE AASHTO STANDARD SPECIFICATIONS FOR HIGHWAY BRIDGES.
2. DESIGN IS ALSO IN ACCORDANCE WITH THE FDOT "STRUCTURES DESIGN GUIDELINES" THROUGH REVISION "H", AND DETAILED IN ACCORDANCE WITH FDOT "STRUCTURES DETAILING MANUAL", DATED NOV. 2, 1992.
3. DESIGNED IN ACCORDANCE WITH THE 1991 AASHTO GUIDE SPECIFICATION AND COMMENTARY FOR VESSEL COLLISION DESIGN OF HIGHWAY BRIDGES.
4. SHRINKAGE COEFFICIENT AND CREEP FACTORS ARE IN ACCORDANCE WITH THE CEB/FIP 1978 GUIDELINES.

** EXCEPT AS DIRECTED OTHERWISE BY LEE CO.

DESIGN METHOD :

1. ALL MAJOR COMPONENTS ARE DESIGNED FOR LOAD FACTOR DESIGN, EXCEPT FOR PRESTRESSED BEAMS, BEARINGS AND PILES, WHICH ARE DESIGNED BY SERVICE LOAD DESIGN. PRESTRESSED BEAMS ARE ALSO CHECKED FOR ULTIMATE CAPACITY.

LOADINGS :

1. HS20-44 (MODIFIED FOR MILITARY LOADING AS REQUIRED) AND FLORIDA LEGAL LOADS SU2, SU3, SU4, C3, C4, AND C5.
2. PRESTRESSED BEAMS DESIGNED FOR AN ADDITIONAL 5% LIVE LOAD.
3. DESIGN TEMPERATURES FOR THERMAL LOADS:

	MEAN	RISE FROM MEAN	FALL FROM MEAN	RANGE	COEFFICENT OF THERMAL EXPANSION
FOR STRUCTURAL DESIGN	70° F	30° F	40° F	70° F	5.0×10^{-6} /F°
FOR BEARINGS & D.J.S.	70° F	25° F	25° F	50° F	5.0×10^{-6} /F°

4. DISTRIBUTION VALUES:

	TYPE IV BEAMS		72" FBT	
	BEAMS 1 & 9	BEAMS 2 THRU 8	BEAMS 1 & 9	BEAMS 2 THRU 8
LIVE LOADS (LANE/BEAM)	.84	.84	.84	.84
TRAFFIC RAILING BARRIER (PLF)	209	60	93	93
MEDIAN BARRIER (PLF)	54	54	54	54

S - BEAM SPACING
N - NUMBER OF BEAMS

5. LIVE LOAD IMPACT FACTORS:
   MAIN SPAN UNIT:
   SIDE SPAN (POSITIVE MOMENT) I - 18%
   CENTER SPAN (POSITIVE MOMENT) I - 15%
   CENTER SPAN (NEGATIVE MOMENT) I - 16%
   APPROACH SPAN UNITS:
   POSITIVE MOMENT I - 19% (SPAN: 144'-9") AND I - 23% (SPAN: 93'-11")
6. CONSTRUCTION LIVE LOAD OF 10 PSF FOR ALL STAGES DURING ERECTION AND CONSTRUCTION. PROPOSED CONSTRUCTION LOADS, IF GREATER, SHALL BE SUBMITTED TO THE ENGINEER FOR APPROVAL AND NO BEAMS SHALL BE MANUFACTURED UNTIL SUCH PROPOSED CONSTRUCTION LOADS HAVE BEEN APPROVED.
7. LONGITUDINAL FORCES DUE TO TRAFFIC EQUAL 5 PERCENT OF THE LIVE LOAD IN 3 LANES CARRYING TRAFFIC HEADED IN THE SAME DIRECTION.
8. CENTRIFUGAL FORCE FOR 50 M.P.H. IN 6 TRAFFIC LANES.
9. EARTHQUAKE - SEISMIC PERFORMANCE CATEGORY A.
10. WIND LOADS ARE COMPUTED IN ACCORDANCE WITH AASHTO ARTICLE 3.15 FOR A 100 MPH WIND. WIND PRESSURES ARE MODIFIED AS PER SECTION 4.3 OF THE FDOT "STRUCTURES DESIGN GUIDELINES".

SHIP IMPACT CRITERIA :

1. PIERS 43 AND 44 IN THE WATERWAY ARE DESIGNED FOR THE MOST CRITICAL LOADING (A OR B):
   A. AN EQUIVALENT STATIC 2734 KIP LOAD APPLIED PARALLEL TO THE CENTERLINE OF THE PIER.
   B. AN EQUIVALENT STATIC 1367 KIP LOAD APPLIED PERPENDICULAR TO THE CENTERLINE OF THE PIER.
   THE EQUIVALENT STATIC LOADS ARE APPLIED AT ELEVATION -1.3 AT THE FOOTING CENTER. THE MOST CRITICAL LOADING IS COMBINED WITH DEAD LOAD, BUOYANCY, AND STREAM FLOW EVALUATED AT FULL ULTIMATE CAPACITY WITH A LOAD FACTOR EQUAL TO ONE (Y=1.0).
2. REMAINING PIERS ARE DESIGNED FOR AN EQUIVALENT STATIC LOAD APPLIED IN THE SAME MANNER AS ABOVE WITH MAGNITUDES CALCULATED BASED ON THE DISTANCE FROM THE SHIP CHANNEL AND GROUPED AS FOLLOWS:

PIER	LOAD PARALLEL TO ℄ PIER	LOAD PERPENDICULAR TO ℄ PIER
32 THRU 36 & 51 THRU 55	2000 KIPS	1000 KIPS
37 THRU 40 & 47 THRU 50	2300 KIPS	1150 KIPS
41, 42, 45 & 46	2600 KIPS	1300 KIPS

ENVIRONMENT :

1. SUPERSTRUCTURE: (SLIGHTLY AGGRESSIVE)
2. SUBSTRUCTURE: (EXTREMELY AGGRESSIVE)
3. LOCATION: COASTAL

FUTURE WEARING SURFACE :

1. DESIGNED FOR 15 POUNDS PER SQUARE FOOT FUTURE WEARING SURFACE.

STAY - IN - PLACE - FORMS :

1. STEEL STAY-IN-PLACE FORMS WILL NOT BE PERMITTED ON THIS BRIDGE.

CONCRETE :

1. CONCRETE:

CLASS OF CONCRETE	MAX. ALLOWABLE SERVICE COMPRESSIVE STRESS (PSI)	MINIMUM 28 DAY COMPRESSIVE STRENGTH (PSI)	DESIGN UNIT WEIGHT INCL. REINFORCING (PCF)	DESIGN MODULUS OF ELASTICITY (KSI)	LOCATION OF CONCRETE
III	1200	3000	150	2800	SEAL
IV	1360	5500 *	150	3000	C.I.P. SUBSTRUCTURE
II	1360	4500 *	150	2825	BRIDGE DECK
II	1360	3400	150	2825	TRAFFIC RAILING BARRIER
V (SPECIAL)	2400	6000	150	4000	PRESTRESSED PILES
IV	2200	5500	150	3900	SIMPLE SPAN - PRESTRESSED BEAMS
V (SPECIAL)	2400	6000	150	4000	SIMPLE SPAN - PRESTRESSED BEAMS
V	2600	6500	150	4200	POST-TENSIONED - PRESTRESSED BEAMS, CLOSURE POURS AND INTERMEDIATE DIAPHRAGMS

* DESIGN IS BASED ON f'c = 3400 PSI.
CLASS V (SPECIAL) CONCRETE SHALL CONFORM TO ALL REQUIREMENTS OF CLASS V CONCRETE EXCEPT FOR THE MINIMUM 28-DAY COMPRESSIVE STRENGTH.

2. CONCRETE SHALL CONFORM TO SECTION 346 OF THE SUPPLEMENTAL SPECIFICATIONS.
3. THE GRADE OF COARSE AGGREGATE FOR ALL BEAMS SHALL BE GRADE NO. 67. FOR THE MAIN SPAN UNIT BEAMS, 100 PERCENT OF THF GRADE NO. 67 COARSE AGGREGATE SHALL PASS THE ¾" SIEVE.
4. PROVIDE ¾" CHAMFERS ON ALL EXPOSED EDGES, UNLESS NOTED OTHERWISE.
5. CONSTRUCTION JOINTS WILL BE PERMITTED ONLY AT LOCATIONS INDICATED ON PLANS. ADDITIONAL CONSTRUCTION JOINTS OR ALTERATIONS TO THOSE SHOWN SHALL REQUIRE WRITTEN APPROVAL OF THE ENGINEER.
6. SUBSTRUCTURE CORROSION INHIBITING (CI) CONCRETE SHALL BE CLASS IV WITH ADDITIVES AS DESCRIBED IN THE SPECIAL PROVISIONS AND AS SHOWN HEREIN. LEE CO. MAY DIRECT ADDITIONAL CI CONCRETE BE PLACED OR DIRECT THAT ANY OR ALL SPECIFIED CI CONCRETE NOT BE USED.

REINFORCING STEEL :

1. REINFORCING STEEL SHALL BE ASTM A615, GRADE 60. ALLOWABLE TENSILE STRESS FOR GRADE 60 - FS = 24,000 P.S.I.
2. ALL DIMENSIONS PERTAINING TO LOCATION OF REINFORCING STEEL ARE TO CENTERLINE OF BARS EXCEPT WHERE CLEAR DIMENSION IS NOTED TO FACE OF CONCRETE.
3. REINFORCING STEEL DETAIL DIMENSIONS ARE OUT-TO-OUT OF BARS.
4. COVER ON REINFORCING STEEL AS FOLLOWS, UNLESS NOTED OTHERWISE:
   PRESTRESS GIRDERS 1¼" EXCEPT TOP SURFACE OF TOP FLANGE
   PRESTRESS GIRDERS ¾" TOP OF TOP FLANGE
   SUPERSTRUCTURE C.I.P. 2"
   SUBSTRUCTURE C.I.P. 3" EXTERNAL SURFACES FORMED
   SUBSTRUCTURE C.I.P. 4" EXTERNAL SURFACES CAST AGAINST EARTH AND IN WATER
   CONCRETE COVERS DO NOT INCLUDE PLACEMENT AND FABRICATION TOLERANCES UNLESS SHOWN AS "MINIMUM COVER".

SUPERSTRUCTURES :

1. PLACE ALL INTERMEDIATE DIAPHRAGMS AT LEAST 48 HOURS BEFORE PLACING SLABS (UNO).
2. SLABS WILL BE SCREEDED LONGITUDINALLY BETWEEN BULKHEADS, UNLESS OTHERWISE DIRECTED IN WRITING BY THE ENGINEER.
3. BRIDGE FLOOR GROOVING SHALL BE IN ACCORDANCE WITH SECTION 400.15.2 OF THE CONSTRUCTION SPECIFICATIONS.

SUBSTRUCTURES :

1. DO NOT PLACE THE BACKFILL ABOVE THE END BENT CAP BEHIND THE END BENT BACKWALL UNTIL THE BEAMS HAVE BEEN SET IN PLACE.
2. SEAL CONCRETE SHALL BE INSTALLED AT THE PIERS AND IN ACCORDANCE TO STANDARD SPECIFICATION 400-8 AND SUPPLEMENTAL SPECIFICATION SECTION 455-3.2.4. THE COST FOR USE OF COFFERDAMS OR FOUNDATION ENCLOSURES, AND DEWATERING FOR THE PIERS SHALL BE INCLUDED IN THE CONTRACTORS BID PRICE FOR SEAL CONCRETE. PAYMENT WILL BE FOR THE ACTUAL AMOUNT OF SEAL CONCRETE USED.

SPECIAL CONSTRUCTION NOTES

1. SHALLOW WATER EXISTS NEAR THE SHORELINE OF THE RIVER, AND DREDGING, USE OF BARGES, OR USE OF A TEMPORARY TRESTLE MAY BE REQUIRED FOR BRIDGE CONSTRUCTION. OBTAINING ANY REQUIRED PERMITS IS THE RESPONSIBILITY OF THE CONTRACTOR AS ARE ANY CONDITIONS OF THE PERMITS, INCLUDING MITIGATION. THE COST OF PERMITTING, USE OF BARGES, OR USE OF TEMPORARY TRESTLE AND ASSOCIATED COST SHALL BE INCLUDED IN THE CONTRACTOR'S BID FOR CONSTRUCTION, AND NO ADDITIONAL COMPENSATION WILL BE ALLOW FOR ANY ITEMS HEREIN MENTIONED.
2. THE CONTRACTOR SHALL COORDINATE WITH THE CONTRACTOR CONSTRUCTING BID PACKAGE NO. 1 SO AS NOT TO DELAY HIM FROM CONSTRUCTING THOSE ITEMS SHOWN OF THE MITIGATION PLANS IN BID PACKAGE NO. 1.
3. THE CONTRACTOR FOR BID PACKAGE 2 IS TO WORK DILIGENTLY WITH THE CONTRACTOR FOR BID PACKAGE 1 IN SCHEDULING HIS ACTIVITIES WITH THE END BENT AND SPAN ONE WHEREIN THE EMBANKMENT FOR THE END BENT, SEAWALL AND MITIGATION IS TO BE COMPLETED PRIOR TO THE INSTALLATION OF THE SLOPE PAVEMENT AND SETTING OF THE BEAMS. THE CONTRACTOR IS TO ATTEND WEEKLY MEETINGS, OR AS DESIGNATED, TO CORRELATE THESE EVENTS.
4. THE CONTRACTOR FOR BID PACKAGE 2 IS TO WORK DILIGENTLY WITH THE CONTRACTOR FOR BID PACKAGE 3 IN SCHEDULING HIS ACTIVITIES WITH THE END BENT AND SPANS 62 AND 63 WHEREIN THE EMBANKMENT FOR END BENT, SEAWALL AND CLEARING AND GRUBBING IS TO BE COMPLETED PRIOR TO THE INSTALLATION OF THE SLOPE PAVEMENT AND SETTING OF THE BEAMS. THE CONTRACTOR IS TO ATTEND WEEKLY MEETINGS, OR AS DESIGNATED, TO CORRELATE THESE EVENTS.
5. THE CONTRACTOR IS TO COOPERATE WITH THE CONTRACTORS FOR PACKAGE 1 AND 3 TO MAINTAIN THE STAGING SITE AND ACCESS.
6. NO JETTING WILL BE ALLOWED FOR THE TEST PILE OR PERMANENT PILE INSTALLATION DUE TO ENVIRONMENTAL CONCERNS.
7. THE CONTRACTOR WILL BE PROVIDED ACCESS TO END BENT #1 TO DRIVE ONTO THE BRIDGE DECK VIA THE MSE WALL FILL AREA WITHIN 180 DAYS OF THE OFFICIAL NOTICE TO PROCEED.

BEARINGS :

1. FOR NOTES ON BEARING REPLACEMENT, SEE SHEET C-73.

DESIGN LOAD FOR PILES :

1. 24" SQUARE PRESTRESSED CONCRETE PILES SHALL BE USED FOR PIERS AND 18" PRESTRESSED CONCRETE PILES FOR END BENTS.
2. FOR NOTES REGARDING INSTALLATION AND DESIGN LOADS FOR PILES, SEE INDIVIDUAL FOUNDATION LAYOUT DRAWINGS OF EACH STRUCTURE.

BID ITEM NOTES :

1. FOR "SUMMARY OF BRIDGE PAY ITEMS" SEE SHEET C-4.
2. PAYMENT FOR INCIDENTAL ITEMS NOT SPECIFICALLY COVERED IN THE INDIVIDUAL BID ITEMS SHALL BE INCLUDED IN THE CONTRACT UNIT PRICE FOR THE BID ITEMS.
3. ALL BEARINGS SHALL BE FURNISHED BY THE CONTRACTOR. BID ITEM NO. 400-147 INCLUDES QUANTITIES FOR STANDARD (AND NON-STANDARD) PADS.
4. BID ITEM NO. 400-7 INCLUDES APPROACH SLAB GROOVING.
5. DETAILS OF APPROACH SLABS AND THEIR PAYMENT ARE INCLUDED UNDER THE ROADWAY PLANS.

ALTERNATE DESIGN USING PRECAST PIERS:

CONTRACTOR DESIRING TO SUBMIT AN ALTERNATE DESIGN USING PRECAST CONCRETE PIERS SHALL PAY FOR ALL COSTS ASSOCIATED WITH THE REDESIGN INCLUDING REVIEW BY THE OWNERS ENGINEER. ALL DOCUMENTS SHALL BE SIGNED AND SEALED BY A FLORIDA PROFESSIONAL ENGINEER.

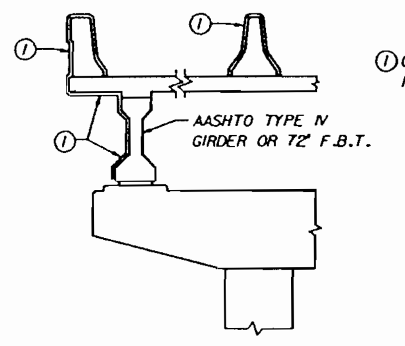

(1) CLASS 5 APPLIED FINISH COATING

PIER

SURFACE FINISH:

1. FINISH IN ACCORDANCE WITH ARTICLE 400-15.2 OF THE CONSTRUCTION SPECIFICATIONS UNLESS NOTED OTHERWISE.
2. IN ADDITION TO SUPERSTRUCTURE SURFACES SHOWN IN DETAIL, EXPOSED VERTICAL SURFACES OF END BENT CHEEKWALL AND CAP SHALL RECEIVE A "CLASS 5 APPLIED FINISH COATING."

TYPICAL SURFACE FINISH DETAILS

[signature] 5-11-95

REVISIONS

DATE	BY	DESCRIPTION	DATE	BY	DESCRIPTION	DATE	BY	DESCRIPTION	DATE	BY	DESCRIPTION

	NAME	DATE
DR. BY	MDD	7/93
CHK. BY	REJ	7/93
SUPV.	REJ	7/93

Greiner
Greiner, Inc.
Tampa, Florida
Engineers, Architects and Planners

BOARD OF COUNTY COMMISSIONERS
LEE COUNTY, FLORIDA
DEPARTMENT OF TRANSPORTATION

MIDPOINT BRIDGE
GENERAL NOTES (1)

PLOTTED: 08MAY95-10.19.50

SUPPLEMENTAL SPECIFICATIONS AND SPECIAL PROVISIONS.

2. BOAT TRAFFIC SHALL BE MAINTAINED AT ALL TIMES DURING CONSTRUCTION.

XXDESIGN SPECIFICATIONS :

1. DESIGNED IN ACCORDANCE WITH THE 1992 EDITION OF THE AASHTO STANDARD SPECIFICATIONS FOR HIGHWAY BRIDGES.
2. DESIGN IS ALSO IN ACCORDANCE WITH THE FDOT "STRUCTURES DESIGN GUIDELINES" THROUGH REVISION "H", AND DETAILED IN ACCORDANCE WITH FDOT "STRUCTURES DETAILING MANUAL", DATED NOV. 2, 1992.
3. DESIGNED IN ACCORDANCE WITH THE 1991 AASHTO GUIDE SPECIFICATION AND COMMENTARY FOR VESSEL COLLISION DESIGN OF HIGHWAY BRIDGES.
4. SHRINKAGE COEFFICIENT AND CREEP FACTORS ARE IN ACCORDANCE WITH THE CEB/FIP 1978 GUIDELINES.

XX EXCEPT AS DIRECTED OTHERWISE BY LEE CO.

DESIGN METHOD :

1. ALL MAJOR COMPONENTS ARE DESIGNED FOR LOAD FACTOR DESIGN, EXCEPT FOR PRESTRESSED BEAMS, BEARINGS AND PILES, WHICH ARE DESIGNED BY SERVICE LOAD DESIGN. PRESTRESSED BEAMS ARE ALSO CHECKED FOR ULTIMATE CAPACITY.

LOADINGS :

1. HS20-44 (MODIFIED FOR MILITARY LOADING AS REQUIRED) AND FLORIDA LEGAL LOADS SU2, SU3, SU4, C3, C4, AND C5.
2. PRESTRESSED BEAMS DESIGNED FOR AN ADDITIONAL 5% LIVE LOAD.
3. DESIGN TEMPERATURES FOR THERMAL LOADS:

	MEAN	RISE FROM MEAN	FALL FROM MEAN	RANGE	COEFFICIENT OF THERMAL EXPANSION
FOR STRUCTURAL DESIGN	70°F	30°F	40°F	70°F	$5.0 \times 10^{-6}/1°$
FOR BEARINGS & D.J.S.	70°F	25°F	25°F	50°F	$5.0 \times 10^{-6}/1°$

4. DISTRIBUTION VALUES:

	TYPE IV BEAMS		MODIFIED TYPE VI BEAMS	
	BEAMS 1 & 9	BEAMS 2 THRU 8	BEAMS 1 & 8	BEAMS 2 THRU 7
LIVE LOADS (LANE/BEAM)	.84	.84	.92	.92
TRAFFIC RAILING BARRIER (PLF)	209	60	104.5	104.5
MEDIAN BARRIER (PLF)	54	54	60.4	60.4

5. LIVE LOAD IMPACT FACTORS:
   MAIN SPAN UNITS:
   SIDE SPAN (POSITIVE MOMENT) I = 18%
   CENTER SPAN (POSITIVE MOMENT) I = 15%
   CENTER SPAN (NEGATIVE MOMENT) I = 16%
   APPROACH SPAN UNITS:
   POSITIVE MOMENT I = 19% (SPAN: 144'-97) AND I = 23% (SPAN: 93'-11')
6. CONSTRUCTION LIVE LOAD OF 10 PSF FOR ALL STAGES DURING ERECTION AND CONSTRUCTION. PROPOSED CONSTRUCTION LOADS, IF GREATER, SHALL BE SUBMITTED TO THE ENGINEER FOR APPROVAL AND NO BEAMS SHALL BE MANUFACTURED UNTIL SUCH PROPOSED CONSTRUCTION LOADS HAVE BEEN APPROVED.
7. LONGITUDINAL FORCES DUE TO TRAFFIC EQUAL 5 PERCENT OF THE LIVE LOAD IN 3 LANES CARRYING TRAFFIC HEADED IN THE SAME DIRECTION.
8. CENTRIFUGAL FORCE FOR 50 M.P.H. IN 6 TRAFFIC LANES.
9. EARTHQUAKE - SEISMIC PERFORMANCE CATEGORY A. DESIGN IN ACCORDANCE WITH SEISMIC CATEGORY B PROCEDURES.
10. WIND LOADS ARE COMPUTED IN ACCORDANCE WITH AASHTO ARTICLE 3.15 FOR A 100 MPH WIND. WIND PRESSURES ARE MODIFIED AS PER SECTION 4.3 OF THE FDOT "STRUCTURES DESIGN GUIDELINES"

SHIP IMPACT CRITERIA :

1. PIERS 43 AND 44 IN THE WATERWAY ARE DESIGNED FOR THE MOST CRITICAL LOADING (A OR B):
   A. AN EQUIVALENT STATIC 2734 KIP LOAD APPLIED PARALLEL TO THE CENTERLINE OF THE PIER.
   B. AN EQUIVALENT STATIC 1367 KIP LOAD APPLIED PERPENDICULAR TO THE CENTERLINE OF THE PIER.

   THE EQUIVALENT STATIC LOADS ARE APPLIED AT ELEVATION +1.1 AT THE FOOTING CENTER. THE MOST CRITICAL LOADING IS COMBINED WITH DEAD LOAD, BUOYANCY, AND STREAM FLOW EVALUATED AT FULL ULTIMATE CAPACITY WITH A LOAD FACTOR EQUAL TO ONE (γ=1.0).
2. REMAINING PIERS ARE DESIGNED FOR AN EQUIVALENT STATIC LOAD APPLIED IN THE SAME MANNER AS ABOVE WITH MAGNITUDES CALCULATED BASED ON THE DISTANCE FROM THE SHIP CHANNEL AND GROUPED AS FOLLOWS:

PIER	LOAD PARALLEL TO ℄ PIER	LOAD PERPENDICULAR TO ℄ PIER
32 THRU 36 & 51 THRU 55	2000 KIPS	1000 KIPS
37 THRU 40 & 47 THRU 50	2300 KIPS	1150 KIPS
41, 42, 45 & 46	2600 KIPS	1300 KIPS

ENVIRONMENT :

1. SUPERSTRUCTURE: (SLIGHTLY AGGRESSIVE)
2. SUBSTRUCTURE: (EXTREMELY AGGRESSIVE)
3. LOCATION: COASTAL

[illegible] 15 POUNDS PER SQUARE FOOT FUTURE WEARING SURFACE.

STAY - IN - PLACE - FORMS :

1. STEEL STAY IN PLACE FORMS WILL NOT BE PERMITTED ON THIS BRIDGE.

CONCRETE :

1. CONCRETE:

CLASS OF CONCRETE	MAX. ALLOWABLE SERVICE COMPRESSIVE STRESS (PSI)	MINIMUM 28 DAY COMPRESSIVE STRENGTH (PSI)	DESIGN UNIT WEIGHT INCL. REINFORCING (PCF)	DESIGN MODULUS OF ELASTICITY (KSI)	LOCATION OF CONCRETE
III	1200	3000	150	2800	SEAL
IV	1360	5000 #	150	3000	C.I.P. SUBSTRUCTURE
II	1360	4500	150	3500	BRIDGE DECK
II	1360	3400	150	2825	TRAFFIC RAILING BARRIER
V (SPECIAL)	2400	6000	150	4000	PRESTRESSED PILES
IV	2250	5500	150	3900	SIMPLE SPAN - PRESTRESSED BEAMS (AASHTO TYPE IV)
V (SPECIAL)	2400	6000	150	4000	SIMPLE SPAN - PRESTRESSED BEAMS (AASHTO TYPE IV)
V	2400	6500	150	4200	SIMPLE SPAN - PRESTRESSED BEAMS (MODIFIED TYPE VI)
					POST-TENSIONED - PRESTRESSED BEAMS, CLOSURE POURS AND INTERMEDIATE DIAPHRAGMS

   # DESIGN IS BASED ON f'c = 3400 PSI.
   CLASS V (SPECIAL) CONCRETE SHALL CONFORM TO ALL REQUIREMENTS OF CLASS V CONCRETE EXCEPT FOR THE MINIMUM 28-DAY COMPRESSIVE STRENGTH.
2. CONCRETE SHALL CONFORM TO SECTION 346 OF THE SUPPLEMENTAL SPECIFICATIONS.
3. THE GRADE OF COARSE AGGREGATE FOR ALL BEAMS SHALL BE GRADE NO. 67. FOR THE MAIN SPAN UNIT BEAMS, 100 PERCENT OF THE GRADE NO. 67 COARSE AGGREGATE SHALL PASS THE ¾" SIEVE.
4. PROVIDE ¾" CHAMFERS ON ALL EXPOSED EDGES, UNLESS NOTED OTHERWISE.
5. CONSTRUCTION JOINTS WILL BE PERMITTED ONLY AT LOCATIONS INDICATED ON PLANS. ADDITIONAL CONSTRUCTION JOINTS OR ALTERATIONS TO THOSE SHOWN SHALL REQUIRE WRITTEN APPROVAL OF THE ENGINEER.
6. SUBSTRUCTURE CORROSION INHIBITING (CI) CONCRETE SHALL BE CLASS IV WITH ADDITIVES AS DESCRIBED IN THE SPECIAL PROVISIONS AND AS SHOWN HEREIN. LEE CO. MAY DIRECT ADDITIONAL CI CONCRETE BE PLACED OR DIRECT THAT ANY OR ALL SPECIFIED CI CONCRETE NOT BE USED.

REINFORCING STEEL :

1. REINFORCING STEEL SHALL BE ASTM A615, GRADE 60.
2. ALL DIMENSIONS PERTAINING TO LOCATION OF REINFORCING STEEL ARE TO CENTERLINE OF BARS EXCEPT WHERE CLEAR DIMENSION IS NOTED TO FACE OF CONCRETE.
3. REINFORCING STEEL DETAIL DIMENSIONS ARE OUT-TO-OUT OF BARS.
4. COVER ON REINFORCING STEEL AS FOLLOWS, UNLESS NOTED OTHERWISE:
   PRESTRESS GIRDERS 1½" EXCEPT TOP SURFACE OF TOP FLANGE
   PRESTRESS GIRDERS ¾" TOP OF TOP FLANGE
   SUPERSTRUCTURE C.I.P. 2"
   SUBSTRUCTURE C.I.P. 3" EXTERNAL SURFACES FORMED
   SUBSTRUCTURE C.I.P. 4" EXTERNAL SURFACES CAST AGAINST EARTH AND IN WATER
   CONCRETE COVERS DO NOT INCLUDE PLACEMENT AND FABRICATION TOLERANCES UNLESS SHOWN AS "MINIMUM COVER".

SUPERSTRUCTURES :

1. PLACE ALL INTERMEDIATE DIAPHRAGMS AT LEAST 48 HOURS BEFORE PLACING SLABS (UNO).
2. SLABS WILL BE SCREEDED LONGITUDINALLY BETWEEN BULKHEADS, UNLESS OTHERWISE DIRECTED IN WRITING BY THE ENGINEER.
3. BRIDGE FLOOR GROOVING SHALL BE IN ACCORDANCE WITH SECTION 400.15.2 OF THE CONSTRUCTION SPECIFICATIONS.

SUBSTRUCTURES :

1. DO NOT PLACE THE BACKFILL ABOVE THE END BENT CAP BEHIND THE END BENT BACKWALL UNTIL THE BEAMS HAVE BEEN SET IN PLACE.
2. SEAL CONCRETE SHALL BE INSTALLED AT THE PIERS AND IN ACCORDANCE TO STANDARD SPECIFICATION 400-8 AND SUPPLEMENTAL SPECIFICATION SECTION 455-3.2.4. THE COST FOR USE OF COFFERDAMS OR FOUNDATION ENCLOSURES, AND DEWATERING FOR THE PIERS SHALL BE INCLUDED IN THE CONTRACTORS BID PRICE FOR SEAL CONCRETE. PAYMENT WILL BE FOR THE ACTUAL AMOUNT OF SEAL CONCRETE USED.

SPECIAL CONSTRUCTION NOTES

1. SHALLOW WATER EXISTS NEAR THE SHORELINE OF THE RIVER, AND DREDGING, USE OF BARGES, OR USE OF A TEMPORARY TRESTLE MAY BE REQUIRED FOR BRIDGE CONSTRUCTION. OBTAINING ANY REQUIRED PERMITS IS THE RESPONSIBILITY OF THE CONTRACTOR AS ARE ANY CONDITIONS OF THE PERMITS, INCLUDING MITIGATION. THE COST OF PERMITTING, USE OF BARGES, OR USE OF TEMPORARY TRESTLE AND ASSOCIATED COST SHALL BE INCLUDED IN THE CONTRACTOR'S BID FOR CONSTRUCTION, AND NO ADDITIONAL COMPENSATION WILL BE ALLOW FOR ANY ITEMS HEREIN MENTIONED.
2. THE CONTRACTOR SHALL COORDINATE WITH THE CONTRACTOR CONSTRUCTING BID PACKAGE NO. 1 SO AS NOT TO DELAY HIM FROM CONSTRUCTING THOSE ITEMS SHOWN OF THE MITIGATION PLANS IN BID PACKAGE NO. 1.
3. THE CONTRACTOR FOR BID PACKAGE 2 IS TO WORK DILIGENTLY WITH THE CONTRACTOR FOR BID PACKAGE 1 IN SCHEDULING HIS ACTIVITIES WITH THE END BENT AND SPAN ONE WHERE THE EMBANKMENT FOR THE END BENT, SEAWALL AND MITIGATION IS TO BE COMPLETED PRIOR TO THE INSTALLATION OF THE SLOPE PAVEMENT AND SETTING OF THE BEAMS. THE CONTRACTOR IS TO ATTEND WEEKLY MEETINGS, OR AS DESIGNATED, TO CORRELATE THESE EVENTS.
4. THE CONTRACTOR FOR BID PACKAGE 2 IS TO WORK DILIGENTLY WITH THE CONTRACTOR FOR BID PACKAGE 3 IN SCHEDULING HIS ACTIVITIES WITH THE END BENT AND SPANS 62 AND 63 WHEREIN THE EMBANKMENT FOR END BENT, SEAWALL AND CLEARING AND GRUBBING IS TO BE COMPLETED PRIOR TO THE INSTALLATION OF THE SLOPE PAVEMENT AND SETTING OF THE BEAM THE CONTRACTOR IS TO ATTEND WEEKLY MEETINGS, OR AS DESIGNATED, TO CORRELATE THESE EVENTS.
5. THE CONTRACTOR IS TO COOPERATE WITH THE CONTRACTORS FOR PACKAGE 1 AND 3 TO MAINTAIN THE STAGING SITE AND ACCESS.
6. NO JETTING WILL BE ALLOWED FOR THE TEST PILE OR PERMANENT PILE INSTALLATION DUE TO ENVIRONMENTAL CONCERNS.
7. THE CONTRACTOR WILL BE PROVIDED ACCESS TO END BENT #1 TO DRIVE ONTO THE BRIDGE VIA THE WSE WALL FILL AREA WITHIN 180 DAYS OF THE OFFICIAL NOTICE TO PROCEED.

BEARINGS :

1. FOR NOTES ON BEARING REPLACEMENT, SEE SHEET C-73A & C-73A2.

DESIGN LOAD FOR PILES :

1. 24" SQUARE PRESTRESSED CONCRETE PILES SHALL BE USED FOR PIERS AND 18" PRESTRESSED CONCRETE PILES FOR END BENTS.
2. FOR NOTES REGARDING INSTALLATION AND DESIGN LOADS FOR PILES, SEE INDIVIDUAL FOUNDATION LAYOUT DRAWINGS OF EACH STRUCTURE.

BID ITEM NOTES :

1. FOR "SUMMARY OF BRIDGE PAY ITEMS" SEE SHEET C-4A.
2. PAYMENT FOR INCIDENTAL ITEMS NOT SPECIFICALLY COVERED IN THE INDIVIDUAL BID ITEMS SHALL BE INCLUDED IN THE CONTRACT UNIT PRICE FOR THE BID ITEMS.
3. ALL BEARINGS SHALL BE FURNISHED BY THE CONTRACTOR.
   BID ITEM NO. 400-147 INCLUDES QUANTITIES FOR STANDARD (AND NON-STANDARD) PADS.
4. BID ITEM NO. 400-7 INCLUDES APPROACH SLAB GROOVING.
5. DETAILS OF APPROACH SLABS AND THEIR PAYMENT ARE INCLUDED UNDER THE ROADWAY PLANS.

ALTERNATE DESIGN USING PRECAST PIERS:

CONTRACTOR DESIRING TO SUBMIT AN ALTERNATE DESIGN USING PRECAST CONCRETE PIERS SHALL PAY FOR ALL COSTS ASSOCIATED WITH THE REDESIGN INCLUDING REVIEW BY THE OWNERS ENGINEER. ALL DOCUMENTS SHALL BE SIGNED AND SEALED BY A FLORIDA PROFESSIONAL ENGINEER.

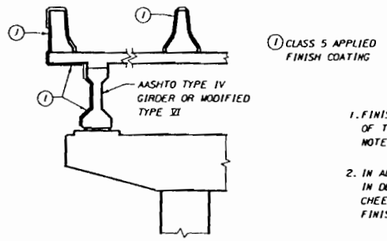

PIER

SURFACE FINISH:

1. FINISH IN ACCORDANCE WITH ARTICLE 400-15.2 OF THE CONSTRUCTION SPECIFICATIONS UNLESS NOTED OTHERWISE.
2. IN ADDITION TO SUPERSTRUCTURE SURFACES SHOWN IN DETAIL, EXPOSED VERTICAL SURFACES OF END BENT CHEEKWALL AND CAP SHALL RECEIVE A "CLASS 5 APPLIED FINISH COATING."

TYPICAL SURFACE FINISH DETAILS

6 MAY 96

FINLEY McNARY/JANSSEN SPAANS
a Joint Venture

Finley McNary Engineers, Inc.
1391 Timberlane Road Suite 200
Tallahassee, Florida 32312-1721

Janssen & Spaans Engineers, Inc.
2825 East 56th Street
Indianapolis, Indiana 46220

REVISIONS

DATE	BY	DESCRIPTION	DATE	BY	DESCRIPTION	DATE	BY	DESCRIPTION	DATE	BY	

	NAME	DATE
DR. BY	J.L.S.	1/96
CHK. BY	C.W.N.	1/96
SUPV.	H.D.R.	1/96

FINLEY McNARY/JANSSEN SPAANS

BOARD OF COUNTY COMMISSIONERS
LEE COUNTY, FLORIDA
DEPARTMENT OF TRANSPORTATION

MIDPOINT BRIDGE
GENERAL NOTES (1)

GENERAL :

1. TYPE IV GIRDERS CONFORM TO AASHTO STANDARD GIRDERS OF SIMILAR DESIGNATION. EXAMPLE: TYPE IV (30-0) DENOTES GIRDER WITH 30 STRAIGHT LOW-RELAXATION STRANDS AND 0 DEPRESSED LOW-RELAXATION STRANDS. SEE SHEETS C-82 THRU C 87 FOR DETAILS.

PRESTRESSED CONCRETE ALLOWABLE STRESSES:

TEMPORARY STRESSES BEFORE LOSSES DUE TO CREEP AND SHRINKAGE AT THE TIME OF PRESTRESS TRANSFER:

COMPRESSION	0.60 f'ci
TENSION	$12\sqrt{f'ci}$ - TOP OF BEAM (OUTER 15% OF DESIGN SPAN OF STRAIGHT STRAND GIRDERS)
TENSION	$6\sqrt{f'ci}$ - ALL OTHER LOCATIONS

STRESSES AFTER LOSSES HAVE OCCURRED:

COMPRESSION	0.40 f'c
COMPRESSION (AT END OF GIRDERS)	# 0.60 f'c
TENSION	$6\sqrt{f'c}$

FOR CONTINUOUS GIRDERS OVER PIERS

PRESTRESSING STEEL:

LOW RELEXACTION STRANDS-ASTM A416	= ½"(PRETENSIONING - AASHTO TYPE IV)
	= 0.60"(PRETENSIONING - MODIFIED TYPE VI)
	= 0.60"(POST-TENSIONING)
ULTIMATE STRENGTH	= 270 KSI
MAXIMUM STRESS @ JACKING	0.80 f's = 216 KSI (POST-TENSIONING)
	0.75 f's = 203 KSI (PRETENSIONING)
AFTER ANCHORING	0.70 f's = 189 KSI (ANCHORAGE)
	0.74 f's = 200 KSI (ALONG TENDON)
DESIGN MODULUS OF ELASTICITY	28,000 KSI - PRESTRESSING
	26,500 KSI - POST-TENSIONING
MAXIMUM ANCHOR SET	0.375 INCH
FRICTION COEFFICIENT	0.25
WOBBLE COEFFICIENT	0.0015

MORTAR LEAKAGE :

ANY MORTAR LEAKAGE THAT OCCURS AND STAINS RESULTING FROM LEAKAGE SHALL BE REMOVED SO THAT BEAMS HAVE A UNIFORM APPEARANCE.

STRANDS :

AT THE OPTION OF THE CONTRACTOR, OTHER TYPES, SIZES AND/OR CONFIGURATIONS OF STRANDS MAY BE USED IN LIEU OF THE STRANDING SHOWN IN THESE PLANS. CHECKED CALCULATIONS SHALL BE SUBMITTED SHOWING THE SUBSTITUTION MEETS THE FOLLOWING REQUIREMENTS:

1. THE STRANDS MEET ALL THE REQUIREMENTS OF ASTM-A416 FOR THE GRADE OF STRANDS PROPOSED.
2. THE NET COMPRESSIVE STRESS IN THE CONCRETE DUE TO PRESTRESSING ACTING ALONE, AFTER ALL LOSSES, IS AT LEAST AS LARGE AS THAT PROVIDED BY THE STRANDING SHOWN ON THESE SHEETS.
3. THE ULTIMATE STRENGTH OF THE SUPERSTRUCTURE WITH THE PROPOSED STRANDING IS AT LEAST EQUAL TO THE ULTIMATE STRENGTH OF THE ORIGINAL DESIGN.
4. THE PROPOSED STRANDING COMPLIES IN ALL RESPECTS WITH THE FDOT "STRUCTURES DESIGN GUIDELINES".

FINISH :

1. THE TOP SURFACE OF THE BEAM SHALL BE CLEAN, ROUGH FLOATED, AND THEN SCRUBBED TRANSVERSELY WITH A COARSE WIRE BRUSH TO REMOVE ALL LAITANCE AND TO PRODUCE A ROUGHENED SURFACE TO A FULL AMPLITUDE OF APPROXIMATELY ¼" FOR BONDING.
2. THE SIDES AND BOTTOM SURFACE OF ALL BEAMS (EXCEPT THE EXTERIOR SIDE OF THE BEAMS WHERE A CLASS 5 FINISH WILL BE APPLIED) SHALL RECEIVE A CLASS 3 SURFACE FINISH.

SUBMITTALS :

1. THE SPECIFICATIONS STIPULATE THE CONDITIONS FOR WHICH ONLY A CONSTRUCTION SUBMITTAL IS REQUIRED. IF EACH AND EVERY CONDITION CAN NOT BE MET, THEN A FORMAL SHOP DRAWING SUBMITTAL IS REQUIRED.

STRAND DETENSIONING :

STRAND DETENSIONING SHALL BE BASED UPON THE FOLLOWING PRIORITY, FROM FIRST TO LAST:

1. TOP DORMANT STRANDS (BARS N)
2. FULLY BONDED STRANDS
3. PARTIALLY DEBONDED STRANDS

FORMS AND PALLETS :

ALL BEAMS SHALL BE CAST ON CONCRETE BASED PALLETS AND IN METAL FORMS. THE SIDES AND BOTTOM OF THE BOTTOM FLANGE OF THE HAUNCH SEGMENT OF THE MAIN SPAN UNIT MAY BE FORMED WITH WOOD FORMS WITH A HIGH DENSITY FORM LINER.

HANDLING :

ALL BEAMS SHALL BE MAINTAINED IN AN UPRIGHT POSITION AT ALL TIMES. ALL BEAMS SHALL BE PICKED UP FROM POINTS LOCATED A MAXIMUM DISTANCE OF 3 FT. FROM THE ENDS OF THE BEAMS, EXCEPT FOR THE OF THE MAIN SPAN UNIT, WHOSE PICKUP POINTS ARE SHOWN ON SHEET NO. C-95A.

STORAGE AND TRANSPORTATION :

ALL BEAMS SHALL BE STORED ON ADEQUATE DUNNAGE AND SUPPORTED DURING TRANSIT WITHIN 18" FROM ENDS OF BEAMS, EXCEPT FOR THE MAIN SPAN UNIT, WHICH SHALL BE STORED AND TRANSPORTED AS SHOWN ON SHEET NO. C-95A.

ERECTION:

1. ALL BEAMS SHALL HE A MINIMUM OF 28 DAYS STRENGTH AT TIME OF ERECTION.
2. THE CONTRACTOR SHALL SATISFACTORILY SECURE, ON PLACE ALL BEAMS PRIOR TO THE PLACEMENT OF THE DECK AND/OR DIAPHRAGMS.

STRAND EXTENSION :

ALL STRANDS SHALL EXTEND 2½" BEYOND ENDS OF BEAMS.

CONCRETE :

REFER TO TABLE OF BEAM VARIABLES ON SHEETS C-84 THRU C-87 FOR THE CLASS OF CONCRETE, 28-DAY STRENGTH (f'c) AND CYLINDER STRENGTH AT TRANSFER OF THE TENSIONING LOAD (f'ci) FOR THE BEAMS IN SPANS 1 THRU 31 AND SPANS 55 THRU 63.

FOR THE MAIN SPAN UNIT AND HIGH LEVEL APPROACH UNIT BEAMS THE CONCRETE IS AS FOLLOWS

CLASS V

28-DAY STRENGTH (f'c) = 6,500 PSI

RELEASE STRENGTH (f'ci) = 5,000 PSI

CURING :

IN ADDITION TO THE CURING DESCRIBED IN STANDARD SPECIFICATION 450-8.6.3, THE TOPS OF THE BEAMS SHALL BE COVERED WITH CURING TARPS FOR 10 DAYS, AS SPECIFIED IN SPECIAL PROVISIONS SECTION 450A MEMBRANE CURING COMPOUND WILL NOT BE PERMITTED.

REINFORCING STEEL :

ALL REINFORCING STEEL SHALL BE A.S.T.M. A-615 GRADE 60.

PAYMENT :

THE COST OF ALL CONCRETE, REINFORCING STEEL, SPLICER INSERTS, PRE-TENSIONED STRANDS POST-TENSIONING MATERIALS EMBEDDED IN THE BEAM CONCRETE, BEARING PLATE ASSEMBLIES AND INCIDENTAL ITEMS SHALL BE INCLUDED IN THE CONTRACT UNIT PRICE AS FOLLOWS:

LOW LEVEL APPROACHES - PRESTRESSED BEAMS (TYPE IV)(BID ITEM NO. 450-1-3)
HIGH LEVEL APPROACHES - PRESTRESSED BEAMS (SPECIAL)(BID ITEM NO. 450-1-7)
MAIN SPAN UNIT - PRESTRESSED BEAMS (SPECIAL - SEGMENTAL)(BID ITEM NO. 450-1-11)

THE COST OF THE TEMPORARY SUPPORTS, STRONG BACKS AND TEMPORARY BRACING NEEDED FOR CONSTRUCTION OF THE MAIN SPAN UNIT SHALL BE INCLUDED IN THE CONTRACT UNIT PRICE FOR PRESTRESSED BEAMS (SPECIAL-SEGMENTAL)(BID ITEM NO. 450-1-11).

DECK FORMS:

THE CONTRACTOR WILL BE PERMITTED TO SUSPEND DECK FORMS FROM BOLTS THROUGH HOLES IN THE TOP FLANGE OF THE BEAMS. THESE HOLES SHALL BE LOCATED AT LEAST ONE FOOT FROM THE EDGE OF THE FLANGE. THE CONTRACTOR SHALL BE RESPONSIBLE FOR SPACING BOLTS SUCH THAT THERE WILL BE NO STRUCTURAL DAMAGE TO THE BEAMS. THE BOLT HOLES SHALL BE SHOWN ON THE GIRDER SHOP DRAWINGS.

LIST OF FREQUENTLY USED ABBREVIATIONS

ADT	-	AVERAGE DAILY TRAFFIC
ASD	-	ALLOWABLE STRESS DESIGN
B	-	BOTTOM
℄	-	BASELINE
BRG	-	BEARING
CIP	-	CAST-IN-PLACE
CLR	-	CLEAR
CJ	-	CONSTRUCTION JOINT
DJS	-	DECK JOINT SEAL
EB	-	END BENT
EF	-	EACH FACE
EOP	-	EDGE OF PAVEMENT
ES	-	EACH SIDE
EW	-	EACH WAY
FB	-	FIELD BEND
FF	-	FAR FACE
FFAS	-	FRONT FACE OF APPROACH SLAB
FFBW	-	FRONT FACE OF BACKWALL
FFRW	-	FRONT FACE OF RETAINING WALL
FS	-	FACTOR OF SAFETY
GDR	-	GIRDER
IF	-	INSIDE FACE
LME	-	LOW MEMBER ELEVATION
LVC	-	LENGTH OF VERTICAL CURVE
MHC	-	MINIMUM HORIZONTAL CLEARANCE
MVC	-	MINIMUM VERTICAL CLEARANCE
NF	-	NEAR FACE
NIC	-	NOT IN CONTRACT
OF	-	OUTSIDE FACE
OFM	-	OWNER FURNISHED MATERIAL
PG	-	PROFILE GRADE
PGL	-	PROFILE GRADE LINE
PMVC	-	POINT OF ACTUAL MINIMUM VERTICAL CLEARANCE
RDWY	-	ROADWAY
SBL	-	SLOPE BREAK LINE
SHLD	-	SHOULDER
SIP	-	STAY-IN-PLACE
SLO	-	SHORT LEG OUT
T	-	TOP
TC	-	TANGENT TO CURVE AT INTERSECTION POINT
TS	-	TANGENT TO SPIRAL AT INTERSECTION POINT
TYP	-	TYPICAL
UNO	-	UNLESS NOTED OTHERWISE
WL	-	WORK LINE
WP	-	WORK POINT
BK	-	BACK (REFERENCED TO DIRECTION OF STATIONING)
AH	-	AHEAD (REFERENCED TO DIRECTION OF STATIONING)
LT	-	LEFT (REFERENCED TO DIRECTION OF STATIONING)
RT	-	RIGHT (REFERENCED TO DIRECTION OF STATIONING)
CI	-	CORROSION INHIBITING

6 MAY 96

FINLEY McNARY/JANSSEN SPAANS
a Joint Venture

Finley McNary Engineers, Inc
1391 Timberlane Road Suite 200
Tallahassee, Florida 32312-1721

Janssen & Spaans Engineers, Inc.
2825 East 56th Street
Indianapolis, Indiana 46220

REVISIONS

DATE	BY	DESCRIPTION	DATE	BY	DESCRIPTION	DATE	BY	DESCRIPTION	DATE	BY

	NAME	DATE
DR. BY	J.L.S.	1/96
CHK. BY	C.W.N.	1/96
SUPV.	H.D.R.	1/96

FINLEY McNARY/JANSSEN SPAANS

BOARD OF COUNTY COMMISSIONERS
LEE, COUNTY, FLORIDA
DEPARTMENT OF TRANSPORTATION

MIDPOINT BRIDGE
GENERAL NOTES (2)

PROJECT NO	SHEET NO
5896	C-3A

BX1-11

POST TENSIONING NOTES

DUCTS :

POST-TENSIONING DUCTS SHALL BE GALVANIZED METAL CORRUGATED SEMI-RIGED CONDUIT WITH 24 GAGE WALL THICKNESS AND MEET THE FOLLOWING REQUIREMENTS:

1. THE DUCTS SHALL BE TIED TO BARS AT A MAXIMUM INTERVAL OF 2 FEET TO PREVENT DISPLACEMENT OF THE DUCTS DURING CONCRETE CASTING.
2. DUCTS SHALL HAVE GROUTING VENTS AT EACH INTERIOR SUPPORT.
3. AFTER INSTALLATION, THE ENDS OF THE DUCTS SHALL BE SEALED AT ALL TIMES TO PREVENT ENTRY OF WATER AND DEBRIS.
4. THE DUCT PLACEMENT TOLERANCE SHALL BE ± 1/4 "IN THE HORIZONTAL DIRECTION AND ± 1/4 "IN THE VERTICAL DIRECTION.
5. A 3 FOOT LONG ± TRANSITION PIECE FABRICATED FROM SHEET METAL OR OTHER APPROVED MATERIAL SHALL CONNECT EACH POST-TENSIONING ANCHORAGE TO THE ADJACENT DUCT. THE CONTRACTOR SHALL SUBMIT SHOP DRAWINGS SHOWING COMPLETE DETAILS OF THESE TRANSITIONS TO THE ENGINEER FOR APPROVAL.
6. THE CONTRACTOR SHALL NOT SET THE BEAM SIDE FORMS IN PLACE UNTIL THE ENGINEER HAS VISUALLY INSPECTED AND APPROVED THE DUCT PROFILE AND REINFORCING CAGE.
7. BEFORE THE BEAMS ARE TRANSPORTED TO THE JOB SITE, THE CONTRACTOR SHALL DEMONSTRATE THAT THE DUCTS ARE NOT BLOCKED BY PASSING THROUGH THEM A TORPEDO AS SPECIFIED IN B460-8.2. THE POST-TENSIONING ANCHORAGE TRUMPET SHALL BE OF SUFFICIENT SIZE TO ALLOW PASSAGE OF THIS TORPEDO.
8. THE DUCT SPLICE SHALL BE DESIGNED TO FIT BETWEEN THE BEAM STIRRUPS AT A 6"SPACING AND SHALL NOT INFRINGE ON THE 1 3/4 "COVER. STIRRUP SPACING MAY BE ADJUSTED UP TO 4". PROVIDED THE TOTAL NUMBER OF STIRRUPS WITHIN 3 FEET ON EITHER SIDE OF THE SPLICE IS THE SAME AS REQUIRED BY THE PLANS.
9. THE CONTRACTOR SHALL BE RESPONSIBLE FOR THE DETAILED DESIGN OF THE DUCT. A SUGGESTED CONCEPTUAL DESIGN OF THE DUCT SPLICE IS GIVEN ON SHEET C-95A. BUT THE CONTRACTOR SHALL ALSO BE RESPONSIBLE FOR THE DETAILED DESIGN OF THE DUCT SPLICE. THE DUCT AND DUCT SPLICE SHALL BE DESIGNED TO MEET THE REQUIREMENTS OF THE SPECIAL PROVISIONS B460 AND THE DUCT CRUSHING TEST AND THE DUCT SPLICE TEST DESCRIBED BELOW:

DUCT CRUSHING TEST :

CAST THE 6' x 1' x 1' CONCRETE SPECIMEN WITH A SECTION OF DUCT AS SHOWN AT RIGHT. USE CONCRETE COMPARABLE TO THAT TO BE USED IN THE BEAM (STRENGTH AND SLUMP) AND VIBRATE INTERNALLY. AFTER THE CONCRETE HAS SET UP, MEASURE THE INSIDE OF THE DUCT WITH CALIPERS AND CALCULATE THE INSIDE AREA OF THE DUCT EXCLUDING ANY CORRUGATIONS. AFTER CASTING THE CONCRETE, THE INSIDE OF THE DUCT SHALL NOT BE CONCAVE, AND THE INSIDE AREA SHALL BE AT LEAST 6.25 SQUARE INCHES.

DUCT SPLICE TEST :

CAST A SPECIMEN SIMILAR TO THAT REQUIRED FOR THE DUCT CRUSHING TEST, EXCEPT SPLICE THE DUCT WITHIN THE SPECIMEN, AS SHOWN AT RIGHT. AFTER CASTING THE CONCRETE, THE INSIDE AREA OF THE DUCT SHALL BE AT LEAST 6.25 SQUARE INCHES AND ABSOLUTELY NO CONCRETE MORTAR MAY LEAK THROUGH THE SPLICE.

UPON COMPLETION OF THE DUCT CRUSHING AND DUCT SPLICE TESTS, THE CONTRACTOR SHALL SUBMIT SHOP DRAWINGS OF THE DUCT AND DUCT SPLICE TO THE ENGINEER FOR APPROVAL. THESE SHOP DRAWINGS SHALL SHOW COMPLETE DIMENSIONS OF THE DUCT AND DUCT SPLICES. A THOROUGH SEQUENCE OF INSTALLATION OF THE DUCT SPLICE, COMPLETE TEST RESULTS AND A 6' LONG SAMPLE OF THE DUCT WITH A SPLICE IN THE MIDDLE. THE DUCT SHALL NOT BE SHIPPED TO THE PRECASTER UNTIL THIS SUBMITTAL IS APPROVED BY THE ENGINEER.

POST-TENSIONING PERSONNEL :

THE PERSON IN FULL-TIME RESPONSIBLE CHARGE OF THE POST-TENSIONING OPERATION SHALL HAVE A MINIMUM OF THREE YEARS OF FULL-TIME EXPERIENCE IN POST-TENSIONING. DOCUMENTATION OF THIS EXPERIENCE SHALL BE SUBMITTED TO THE ENGINEER FOR APPROVA CL

SHOP DRAWINGS :

THE CONTRACTOR SHALL SUBMIT SHOP DRAWINGS SHOWING COMPLETE DETAILS OF THE POST-TENSIONING SYSTEM TO THE ENGINEER FOR APPROVAL. THE CONTRACTOR SHALL SUBMIT TENDON STRESSING DETAILS FOR APPROVAL BY THE ENGINEER. THESE DETAILS SHALL INDICATE JACKING FORCES, THE SEQUENCE OF STRESSING, CALCULATED EXTENSIONS AT EACH JACK, FRICTION COEFFICIENT AND ANCHOR SET LOSS.

JACKING FORCE :

ALL TENDONS SHALL BE STRESSED FROM BOTH ENDS.
THE JACKING FORCE REQUIRED AT BOTH ENDS OF EACH TENDON BEFORE ANCHOR SET IS 46.9 KIPS PER STRAND.

PROCEDURES TO AVOID BLOCKED DUCTS :

THE CONTRACTOR SHALL PERFORM THE FOLLOWING PROCEDURES TO AVOID BLOCKED POST-TENSIONING DUCTS:

1. BEFORE TRANSPORTING BEAM TO JOB SITE: SEE DUCT NOTE NO.7.
2. AFTER CLOSURE POURS: DURING OR IMMEDIATELY AFTER EVERY CLOSURE POUR IS CAST, THE CONTRACTOR SHALL DEMONSTRATE TO THE SATISFACTION OF THE ENGINEER THAT THE DUCTS ARE NOT BLOCKED BY PASSING THROUGH EACH DUCT AN OVAL TORPEDO AS DESCRIBED IN DUCT NOTE NO.7. THE CONTRACTOR SHALL COMPLETE THIS DEMONSTRATION BEFORE THE CLOSURE POUR CONCRETE HAS TAKEN ITS INITIAL SET. THE CONTRACTOR MAY PROPOSE AN ALTERNATE METHOD FOR APPROVAL BY THE ENGINEER.
3. AFTER GROUTING TENDONS: DURING OR IMMEDIATELY AFTER GROUTING THE TENDONS FOR THE FIRST STAGE POST-TENSIONING, THE CONTRACTOR SHALL FLUSH THE REMAINING DUCTS WITH POTABLE WATER TO REMOVE ANY GROUT THAT MAY HAVE LEAKED INTO THE EMPTY DUCTS. DURING OR IMMEDIATELY AFTER THIS FLUSHING OPERATION, THE CONTRACTOR SHALL DEMONSTRATE TO THE SATISFACTION OF THE ENGINEER THAT THE EMPTY DUCTS ARE NOT BLOCKED BY PASSING THROUGH THEM AN OVAL TORPEDO AS DESCRIBED IN DUCT NOTE NO.7. THE CONTRACTOR SHALL COMPLETE THE FLUSHING OPERATION AND THE DEMONSTRATION BEFORE THE GROUT HAS TAKEN ITS INITIAL SET.

PAYMENT :

BASIS OF PAYMENT FOR POST-TENSIONING TENDONS SHALL BE AS DEFINED IN SPECIAL PROVISIONS B460-14.1. THE COST OF THE DUCT CRUSHING TEST AND DUCT SPLICE TEST SHALL ALSO BE INCLUDED IN THE CONTRACT UNIT PRICE FOR POST-TENSIONING TENDONS.

ALTERNATE DESIGN :

ALTERNATE PRESTRESSING AND POST-TENSIONING CONFIGURATIONS ARE ALLOWED BUT WILL BE CONSIDERED A REDESIGN. SIGNED AND SEALED CALCULATIONS SHALL BE SUBMITTED BY THE SPECIALTY ENGINEER FOR APPROVAL. ALL REVIEW COST OF REDESIGN BY THE ENGINEER OF RECORD SHALL BE THE RESPONSIBILITY OF THE CONTRACTOR.

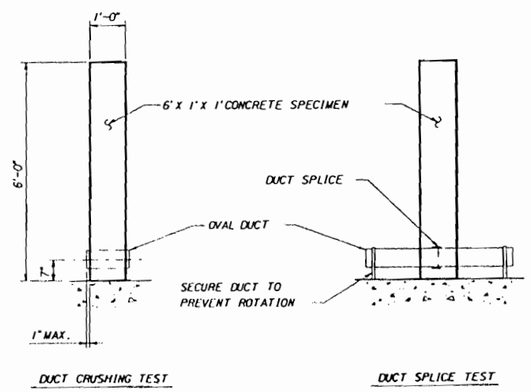

DETAILS OF DUCT TESTS

6 MAY 96

FINLEY McNARY/JANSSEN SPAANS
a Joint Venture

Finley McNary Engineers, Inc.
1391 Timberlane Road Suite 200
Tallahassee, Florida 32312-1721

Janssen & Spaans Engineers, Inc
2825 East 56th Street
Indianapolis, Indiana 46220

REVISIONS

DATE	BY	DESCRIPTION	DATE	BY	DESCRIPTION	DATE	BY	DESCRIPTION	DATE	BY

	NAME	DATE
DR. BY	J.L.S.	5/96
CHK. BY	C.W.H.	5/96
SUPV.	H.D.H.	5/96

FINLEY McNARY/JANSSEN SPAANS

BOARD OF COUNTY COMMISSIONERS
LEE, COUNTY, FLORIDA
DEPARTMENT OF TRANSPORTATION

MIDPOINT BRIDGE
GENERAL NOTES (3)

PROJECT NO.	SHEET NO.
5896	C-4A

BX1-12

ITEM NO.	DESCRIPTION	UNIT	QUANTITY
400-2-4	CONCRETE CLASS II (SUPERSTRUCTURE)	CY	16626.40
400-3-20	CONCRETE CLASS III (SEAL)	CY	3887.14
400-4-5	CONCRETE CLASS IV (SUBSTRUCTURE)	CY	6864.10
400-4-25	CONCRETE CLASS IV (MASS)(SUBSTRUCTURE)	CY	17760.64
400-7-0	BRIDGE FLOOR GROOVING	SY	** 60899 #
400-8-4	CONCRETE CLASS V (SUPERSTRUCTURE)(CLOSURE POURS/DIAPHRAGMS)	CY	101.20
400-147-0	COMPOSITE NEOPRENE PADS	CF	369.30
400-148-1	TRAFFIC RAILING (F&I)(BARRIER)	LF	14343.3 #
415-1-4	REINFORCING STEEL (SUPERSTRUCTURE)	LB	3390601
415-1-5	REINFORCING STEEL (SUBSTRUCTURE)	LB	4020189
450-1-3	PRESTRESSED BEAMS (TYPE IV)	LF	33525.03 #
450-1-7	PRESTRESS BEAMS (SPECIAL)	LF	23072.83 #
450-1-11	PRESTRESS BEAMS (SPECIAL-SEGMENTAL)	LF	4121.58 #
455-3-1	PILING FURNISHED (PRESTRESSED CONCRETE)(14" SQ.)	LF	12960
455-3-2	PILING FURNISHED (PRESTRESS CONCRETE) (18" SQ#)	LF	1935
455-3-4	PILING FURNISHED (PRESTRESS CONCRETE) (24" SQ#)	LF	105330
455-4-1	PILING DRIVEN (PRESTRESSED CONCRETE)(14" SQ.)	LF	12960
455-4-2	PILING DRIVEN (PRESTRESSED CONCRETE)(18" SQ.)	LF	1935
455-4-4	PILING DRIVEN (PRESTRESS CONCRETE) (24" SQ)	LF	105330
455-17-2	PILE SPLICES (18")	EA	2
455-17-4	PILE SPLICES (24") #	EA	115
455-137-0	TEST LOAD (DYNAMIC)	EA	45
455-140-12	TEST PILES FURNISHED (18" SQ#)	LF	210
455-140-14	TEST PILES FURNISHED (24" SQ#)	LF	4300
455-141-12	TEST PILES DRIVEN (18" SQ)	LF	210
455-141-14	TEST PILES DRIVEN (24" SQ)	LF	4300
459-71	POLYETHYLENE SHEETING	SY	3388
460-7-4	EXPANSION JOINT SEAL (STRIP ELAST) #	LF	1326.0 #
460-7-5	EXPANSION JOINT SEAL (MODULAR) #	LF	156.0 #
460-111-1	POST TENSIONING TENDONS (LONG SUPERSTRUCTURE STRAND) #	LB	92017
470-1-0	TREATED TIMBER STRUCTURAL	MB	20.481
506-1	BRIDGE DRAINAGE SYSTEM	LS	1
510-1-A	NAVIGATION LIGHTS #	LS	1
521-72-1	CONCRETE BARRIER WALL (MEDIAN)	LF	7171.7 #
--	ACCESS LADDER AND PLATFORMS (STEEL) #	LB	10892

NOTE: # IDENTIFIES ITEMS NORMALLY REQUIRING SHOP DRAWINGS - CONTRACTOR SHALL DETERMINE OTHER ITEMS REQUIRING SHOP DRAWING.
** INCLUDES 33728 SY OF APPROACH SLABS.

IF THE OWNER ELECTS TO USE THIS ALTERNATE, THE SUBSTRUCTURE CONCRETE QUANTITIES IDE/AS=0

ITEM NO.	DESCRIPTION	UNIT	QUANTITY
400-4-5	CONCRETE CLASS IV (SUBSTRUCTURE)	CY	2458.34
400-4-5A	CONCRETE CLASS IV CORROSION INHIBITING (SUBSTRUCTURE)	CY	4405.76

ADRO 6 MAY 96

FINLEY McNARY/JANSSEN SPAANS
a Joint Venture

Finley McNary Engineers, Inc
1391 Timberlane Road Suite 200
Tallahassee, Florida 32312-1721

Janssen & Spaans Engineers, Inc.
2825 East 56th Street
Indianapolis, Indiana 46220

REVISIONS

DATE	BY	DESCRIPTION	DATE	BY	DESCRIPTION	DATE	BY	DESCRIPTION	DATE	BY

	NAME	DATE
DR. BY	J.L.S.	5/96
CHK. BY	C.W.H.	5/96
SUPV.	N.D.R.	5/96

FINLEY McNARY/JANSSEN SPAANS

BOARD OF COUNTY COMMISSIONERS
LEE COUNTY, FLORIDA
DEPARTMENT OF TRANSPORTATION

MIDPOINT BRIDGE
SUMMARY OF ESTIMATED QUANTITIES

DISK#DRAW: C251000.CADD.FG | BGPEWP08.FGM

PROJECT NO.	SHEET NO.
5896	C-5

BX1-13

TRAFFIC DATA				
ROADWAY	ADT YEAR 1995	ADT YEAR 2015	DESIGN SPEED	% TRUCKS
MIDPOINT CORRIDOR	27,000	47,300	50 MPH	3.0

DENOTES LOCATION OF SOILS BORING. FOR DETAILS, SEE "REPORT OF CORE BORINGS FOR STRUCTURE," SHEETS C-14 THRU C-20.

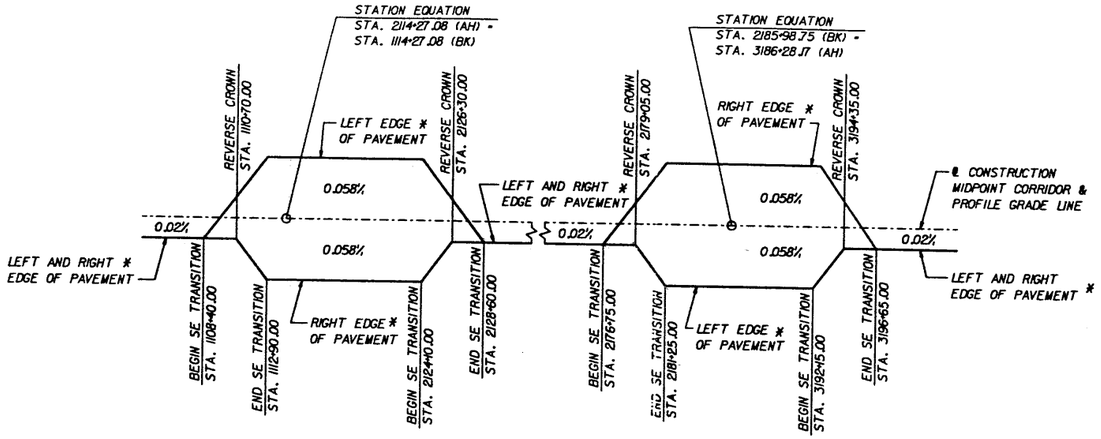

SUPERELEVATION TRANSITION DIAGRAM

* PAVEMENT ON THE BRIDGE REFERS TO THE DECK FASCIA ON THE BRIDGE.

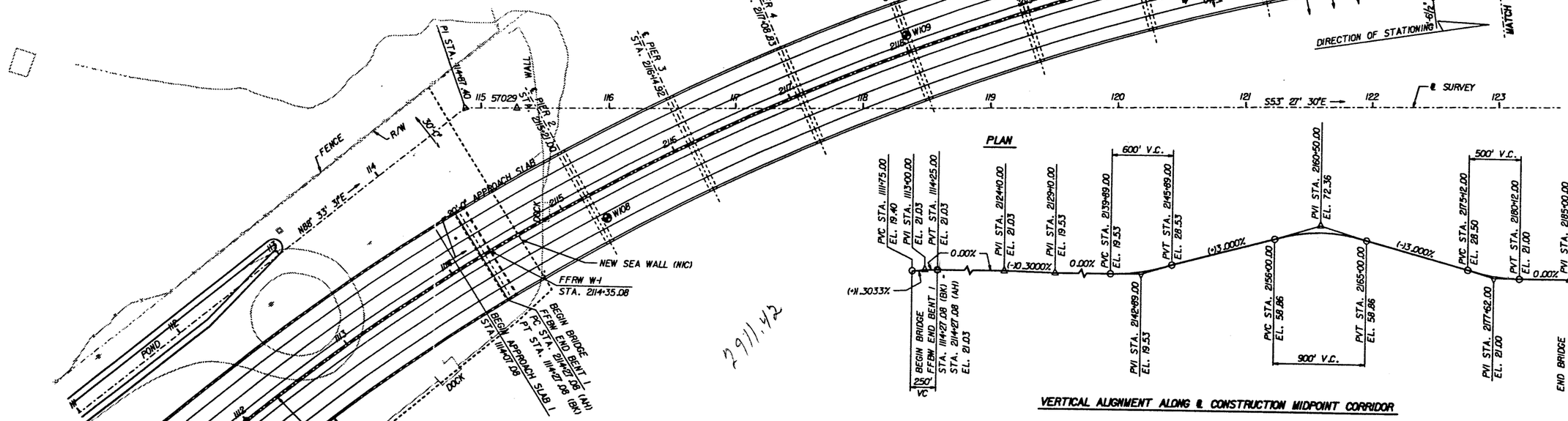

PLAN

VERTICAL ALIGNMENT ALONG ℄ CONSTRUCTION MIDPOINT CORRIDOR

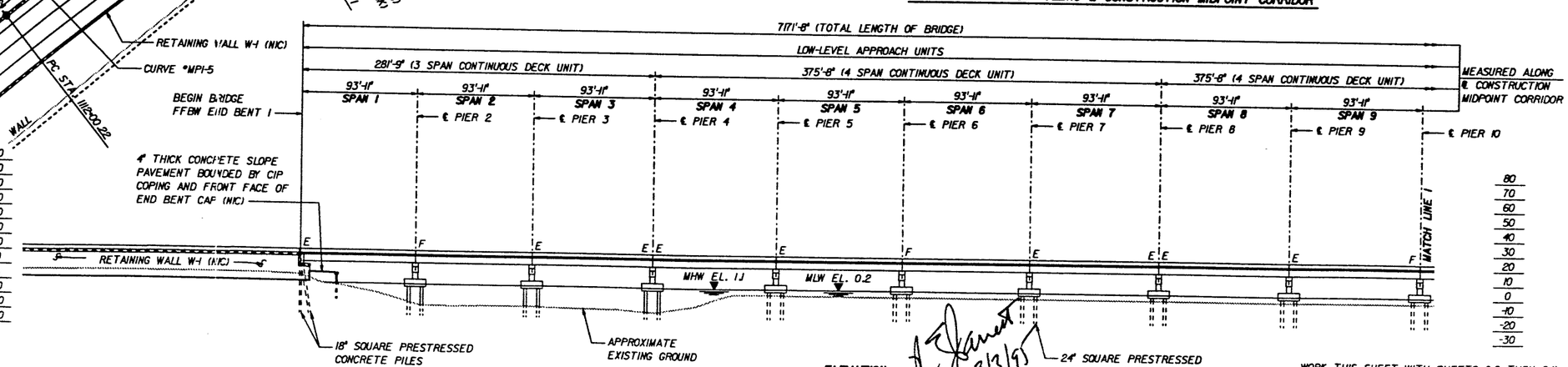

ELEVATION

CURVE #MP1-5
P.I. STA. 1113+13.78
Δ = 6° 48' 21"
Dc = 3° 00' 00"
R = 1909.86'
L = 226.86'
T = 113.57'
e = 0.058
P.C. STA. 1112+00.22
P.T. STA. 1114+27.08

CURVE #MP2-1
P.I. STA. 2119+78.23
Δ = 32° 11' 39"
Dc = 3° 00' 00.0"
R = 1909.86'
L = 1073.14'
T = 551.15'
e = 0.058
P.C. STA. 2114+27.08
P.T. STA. 2125+00.22

HORIZONTAL ALIGNMENT ALONG ℄ CONSTRUCTION MIDPOINT CORRIDOR

WORK THIS SHEET WITH SHEETS C-6 THRU C-11.

REVISIONS											
DATE	BY	DESCRIPTION	DATE	BY	DESCRIPTION	DATE	BY	DESCRIPTION	DATE	BY	DESCRIPTION

	NAME	DATE
DR. BY	JLS	4/93
CHK. BY	REJ	2/94
SUPV.	REJ	7/93

Greiner, Inc. Tampa, Florida — Engineers, Architects and Planners

BOARD OF COUNTY COMMISSIONERS
LEE COUNTY, FLORIDA
DEPARTMENT OF TRANSPORTATION

MIDPOINT BRIDGE
PLAN AND ELEVATION (1)

FALECCTY

PLOTTED: 27JAN95-10:25:50

DISK#DRAW: C26/000.CADD.FG BG:PEWP09.FGBJ

PROJECT NO.	SHEET NO
5896	C-6

BX1-14

DENOTES LOCATION OF SOILS BORING. FOR DETAILS, SEE 'REPORT OF CORE BORINGS FOR STRUCTURE.' SHEETS C-14 THRU C-20.

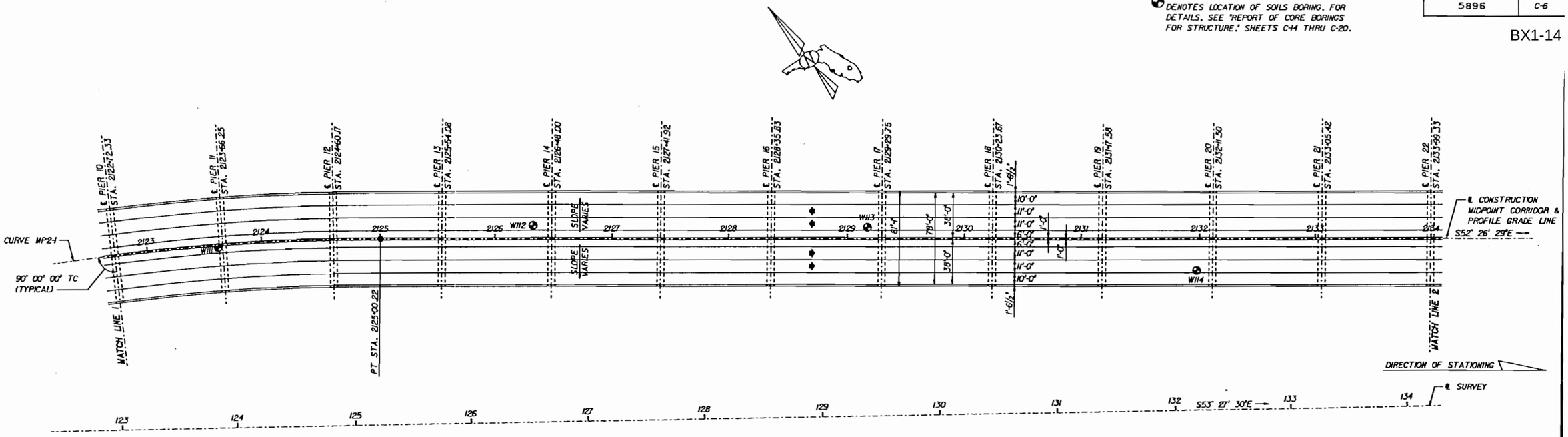

PLAN

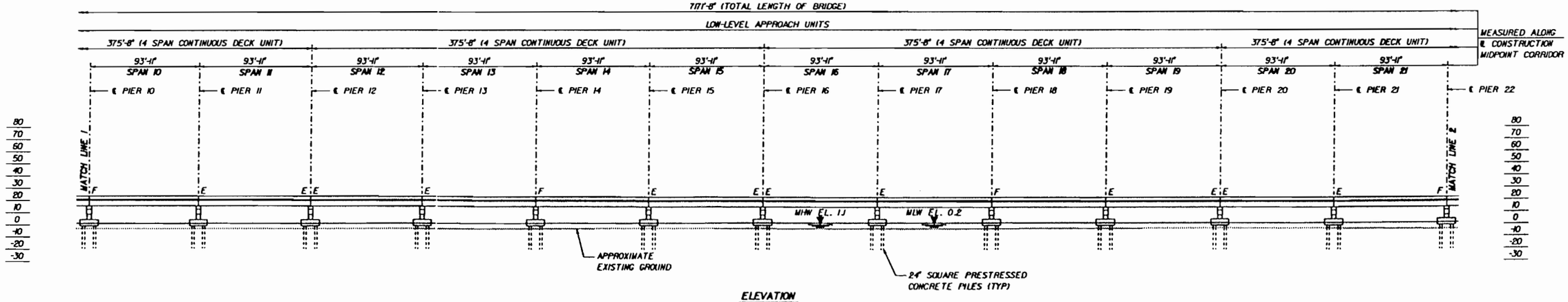

ELEVATION

3/3/95

WORK THIS SHEET WITH SHEETS C-5 & C-7 THRU C-11.

REVISIONS											
DATE	BY	DESCRIPTION	DATE	BY	DESCRIPTION	DATE	BY	DESCRIPTION	DATE	BY	DESCRIPTION

	NAME	DATE
DR. BY	JLS	4/93
CHK. BY	REJ	7/94
SUPV.	REJ	7/94

Greiner Engineering Sciences, Inc. Tampa, Florida

Engineers, Architects and Planners

BOARD OF COUNTY COMMISSIONERS
LEE COUNTY, FLORIDA
DEPARTMENT OF TRANSPORTATION

MIDPOINT BRIDGE
PLAN AND ELEVATION (2)

FILECCTY

PLOTTED: 22-JAN-95 09:00

PROJECT NO	SHEET NO
5896	C-7A

BX1-15

DENOTES LOCATION OF SOILS BORING. FOR DETAILS. SEE "REPORT OF CORE BORINGS FOR STRUCTURE," SHEETS C-14 THRU C-20.

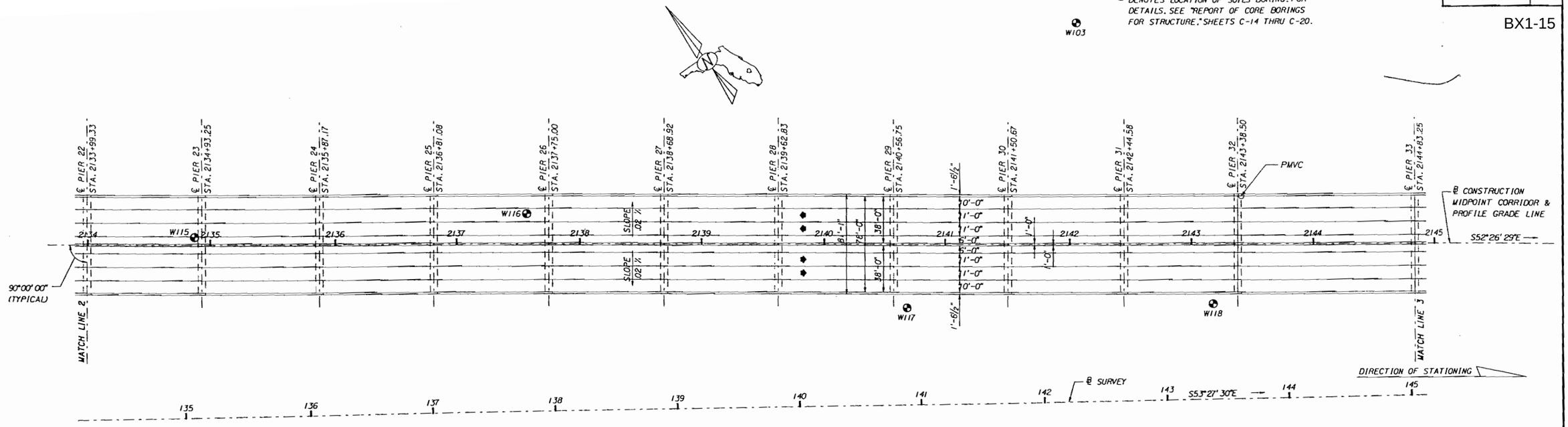

WORK THIS SHEET WITH SHEETS C-5A, C-6 & C-8A - C-10A & C-11.

6 MAY 96

FINLEY McNARY/JANSSEN SPAANS
a Joint Venture

Finley McNary Engineers, Inc
1391 Timberlane Road Suite 200
Tallahassee, Florida 32312-1721

Janssen & Spaans Engineers, Inc.
2825 East 56th Street
Indianapolis, Indiana 46220

REVISIONS

DATE	BY	DESCRIPTION	DATE	BY	DESCRIPTION	DATE	BY	DESCRIPTION	DATE	BY

	NAME	DATE
DR. BY	J.L.S.	1/96
CHK. BY	C.W.K.	1/96
SUPV.	H.D.R.	1/96

FINLEY McNARY/JANSSEN SPAANS

BOARD OF COUNTY COMMISSIONERS
LEE COUNTY, FLORIDA
DEPARTMENT OF TRANSPORTATION

MIDPOINT BRIDGE
PLAN AND ELEVATION (3)

DISK#DRAW\ C25K000.CADD.FG\ BCPEMPII.FG6J

PROJECT NO.	SHEET NO.
5896	C-8

BX1-16

DENOTES LOCATION OF SOILS BORING. FOR DETAILS, SEE "REPORT OF CORE BORINGS FOR STRUCTURE." SHEETS C-14 THRU C-20.

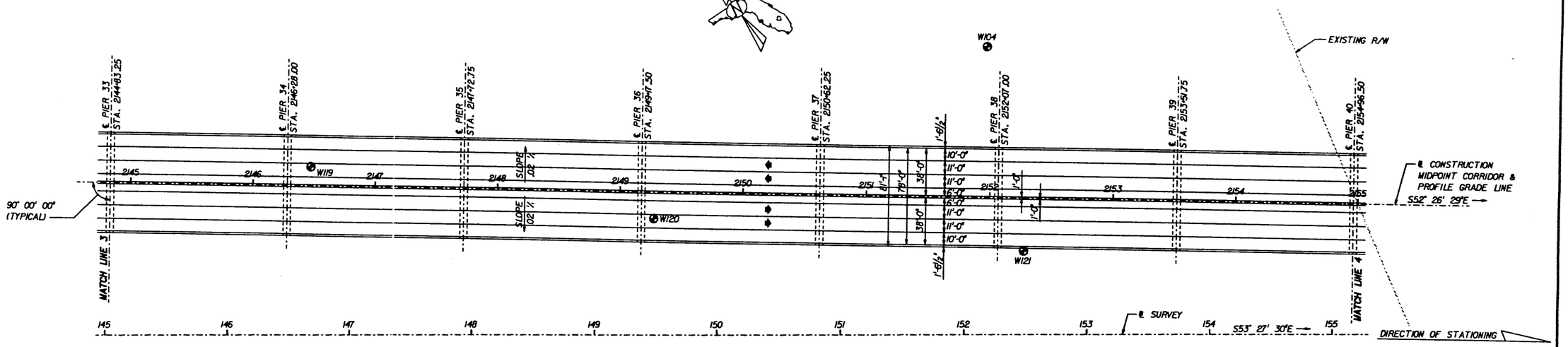

PLAN

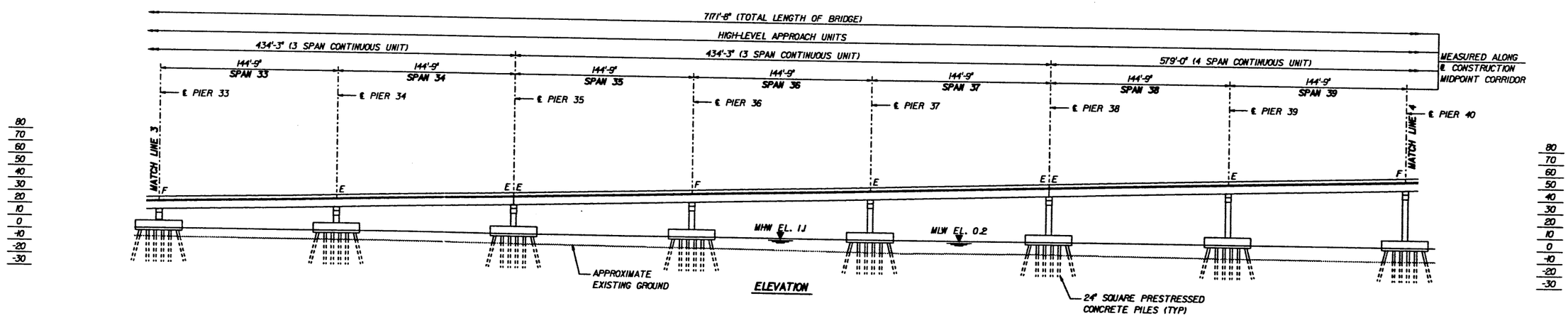

ELEVATION

3/3/95

WORK THIS SHEET WITH SHEETS C-5,C-6,C-7,C-9,C-10 & C-11.

FRLECCTY

REVISIONS

DATE	BY	DESCRIPTION	DATE	BY	DESCRIPTION	DATE	BY	DESCRIPTION	DATE	BY	DESCRIPTION

PLOTTED: 27JAN95-10:31:20

	NAME	DATE
DR.BY	JLS	4/93
CHK.BY	REJ	7/94
SUPV.	REJ	7/94

Greiner
Greiner, Inc.
Tampa, Florida

Engineers, Architects and Planners

BOARD OF COUNTY COMMISSIONERS
LEE COUNTY, FLORIDA
DEPARTMENT OF TRANSPORTATION

MIDPOINT BRIDGE
PLAN AND ELEVATION (4)

PROJECT NO.	SHEET NO.
5896	C-9

BX1-17

DENOTES LOCATION OF SOILS BORING. FOR DETAILS, SEE "REPORT OF CORE BORINGS FOR STRUCTURE," SHEETS C-14 THRU C-20.

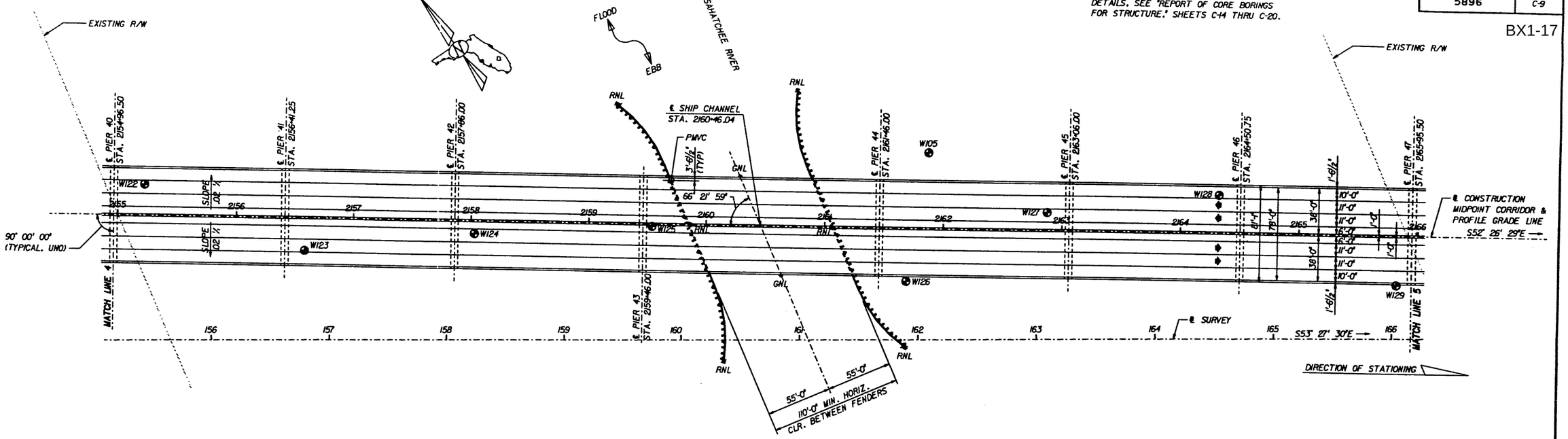

PLAN

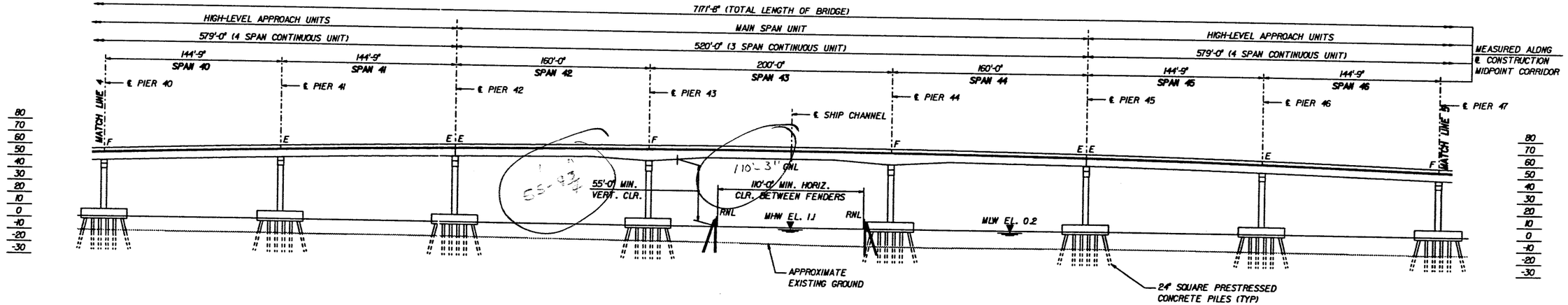

ELEVATION

3/3/91

WORK THIS SHEET WITH SHEETS C-5 THRU C-8, C-10 & C-11.

REVISIONS											
DATE	BY	DESCRIPTION	DATE	BY	DESCRIPTION	DATE	BY	DESCRIPTION	DATE	BY	DESCRIPTION

	NAME	DATE
DR. BY	JLS	4/93
CHK. BY	REJ	7/94
SUPV.	REJ	7/94

Greiner Greiner, Inc. Tampa, Florida

Engineers, Architects and Planners

BOARD OF COUNTY COMMISSIONERS
LEE COUNTY, FLORIDA
DEPARTMENT OF TRANSPORTATION

MIDPOINT BRIDGE
PLAN AND ELEVATION (5)

DISK#DRAW: C:251000.CADD.FG | BGPEMP12.FGBJ

FRLEECTY

PLOTTED: 27JAN95-10:32:20

PROJECT NO	SHEET NO
5896	C-10A

BX1-18

DENOTES LOCATION OF SOILS BORING. FOR DETAILS, SEE "REPORT OF CORE BORINGS FOR STRUCTURE," SHEETS C-14 THRU C-20.

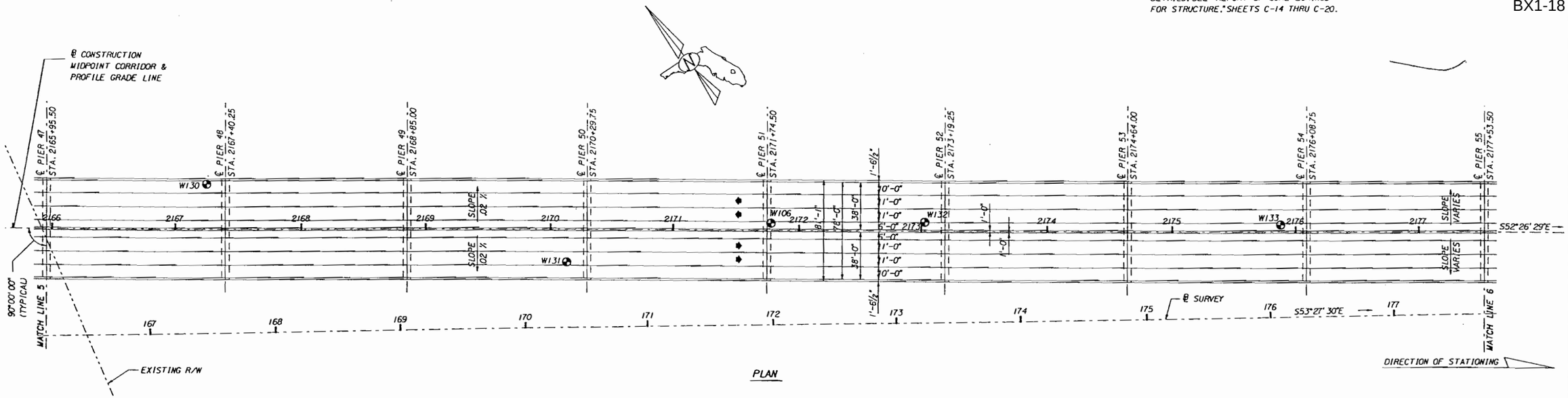

PLAN

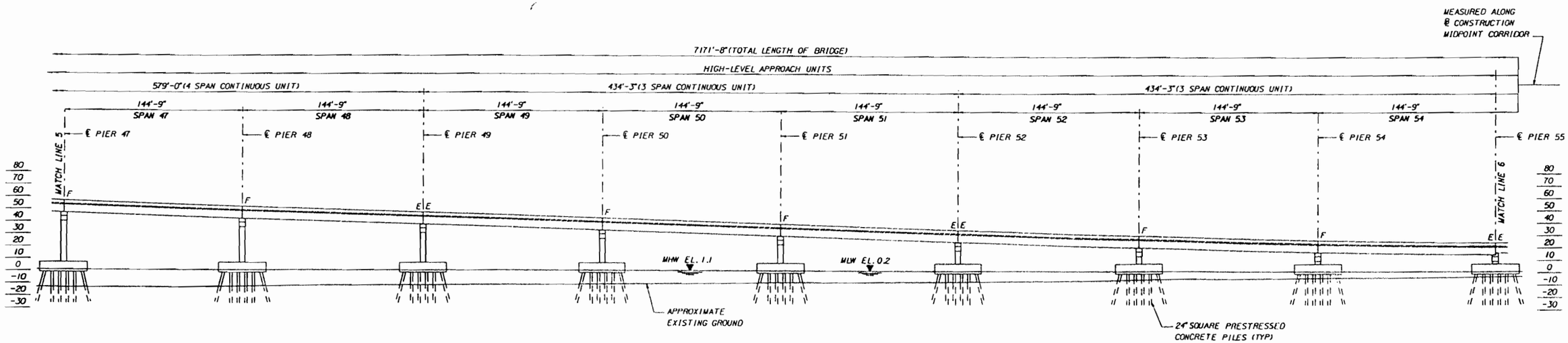

ELEVATION

WORK THIS SHEET WITH SHEETS C-5A, C-6, C-7A-C-9A & C-11.

6 MAY 96

FINLEY McNARY/JANSSEN SPAANS
a Joint Venture

Finley McNary Engineers, Inc
1391 Timberlane Road Suite 200
Tallahassee, Florida 32312-1721

Janssen & Spaans Engineers, Inc
2825 East 56th Street
Indianapolis, Indiana 46220

REVISIONS

DATE	BY	DESCRIPTION	DATE	BY	DESCRIPTION	DATE	BY	DESCRIPTION	DATE	BY	

	NAME	DATE
DR. BY	J.L.S.	5/96
CHK. BY	C.W.K.	5/96
SUPV.	H.D.R.	5/96

FINLEY McNARY/JANSSEN SPAANS

BOARD OF COUNTY COMMISSIONERS
LEE COUNTY, FLORIDA
DEPARTMENT OF TRANSPORTATION

MIDPOINT BRIDGE
PLAN AND ELEVATION (6)

PROJECT NO.	SHEET NO.
5896	C-11

BX1-19

DISK@DRAW: C25/000.CADD.FG BGPEWP14.FGBJ

DENOTES LOCATION OF SOILS BORING. FOR DETAILS. SEE "REPORT OF CORE BORINGS FOR STRUCTURE," SHEETS C-14 THRU C-20.

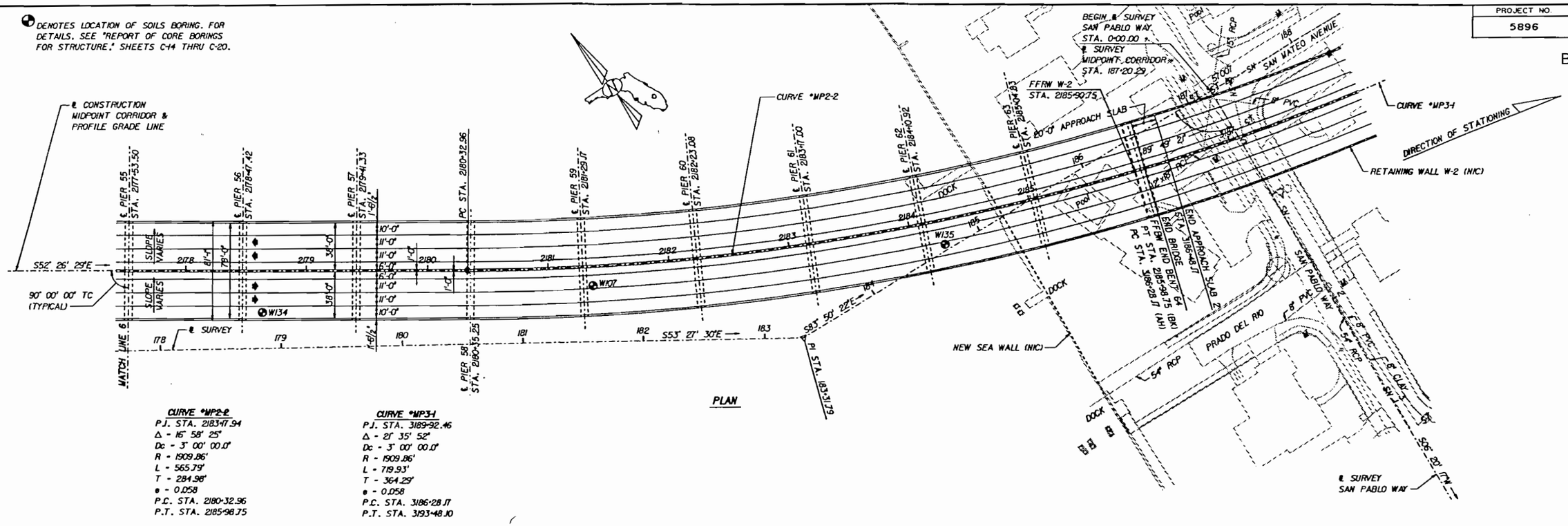

PLAN

CURVE #WP2-2
P.J. STA. 2183+17.94
Δ = 16° 58' 25"
Dc = 3° 00' 00.0"
R = 1909.86'
L = 565.79'
T = 284.98'
e = 0.058
P.C. STA. 2180+32.96
P.T. STA. 2185+98.75

CURVE #WP3-1
P.J. STA. 3189+92.46
Δ = 21° 35' 52"
Dc = 3° 00' 00.0"
R = 1909.86'
L = 719.93'
T = 364.29'
e = 0.058
P.C. STA. 3186+28.17
P.T. STA. 3193+48.10

HORIZONTAL ALIGNMENT ALONG ℄ CONSTRUCTION MIDPOINT CORRIDOR

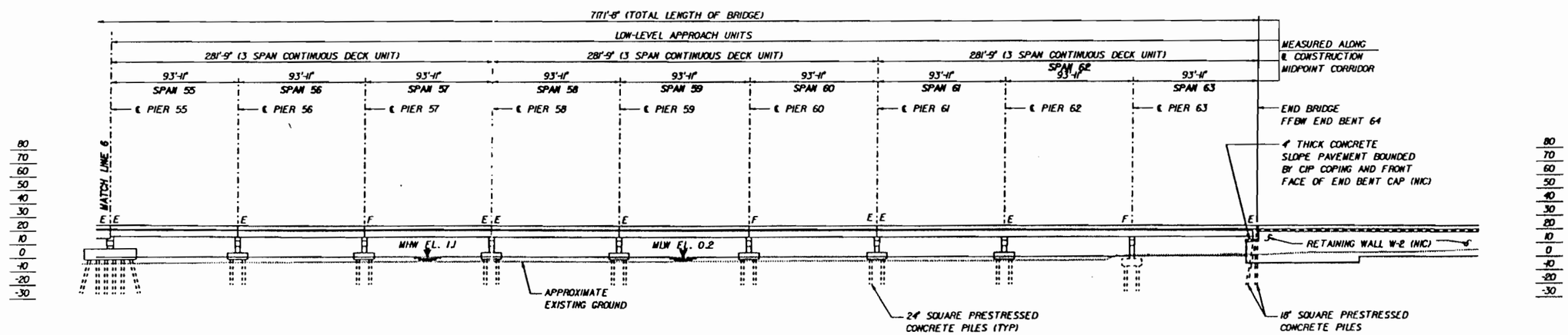

ELEVATION

3/3/95

WORK THIS SHEET WITH SHEETS C-5 THRU C-10.

REVISIONS											
DATE	BY	DESCRIPTION	DATE	BY	DESCRIPTION	DATE	BY	DESCRIPTION	DATE	BY	DESCRIPTION

	NAME	DATE
DR. BY	JLS	4/93
CHK. BY	REJ	2/94
SUPV.	REJ	7/93

Greiner Engineers, Inc. Tampa, Florida

Engineers, Architects and Planners

BOARD OF COUNTY COMMISSIONERS
LEE COUNTY, FLORIDA
DEPARTMENT OF TRANSPORTATION

MIDPOINT BRIDGE
PLAN AND ELEVATION (7)

FRLEECTY

PLOTTED: 27JAN95-10:35:10

COUNTY PROJ. NO.	SHEET NO.
5896	C-12
BRIDGE NO.	0000000

BX1-20

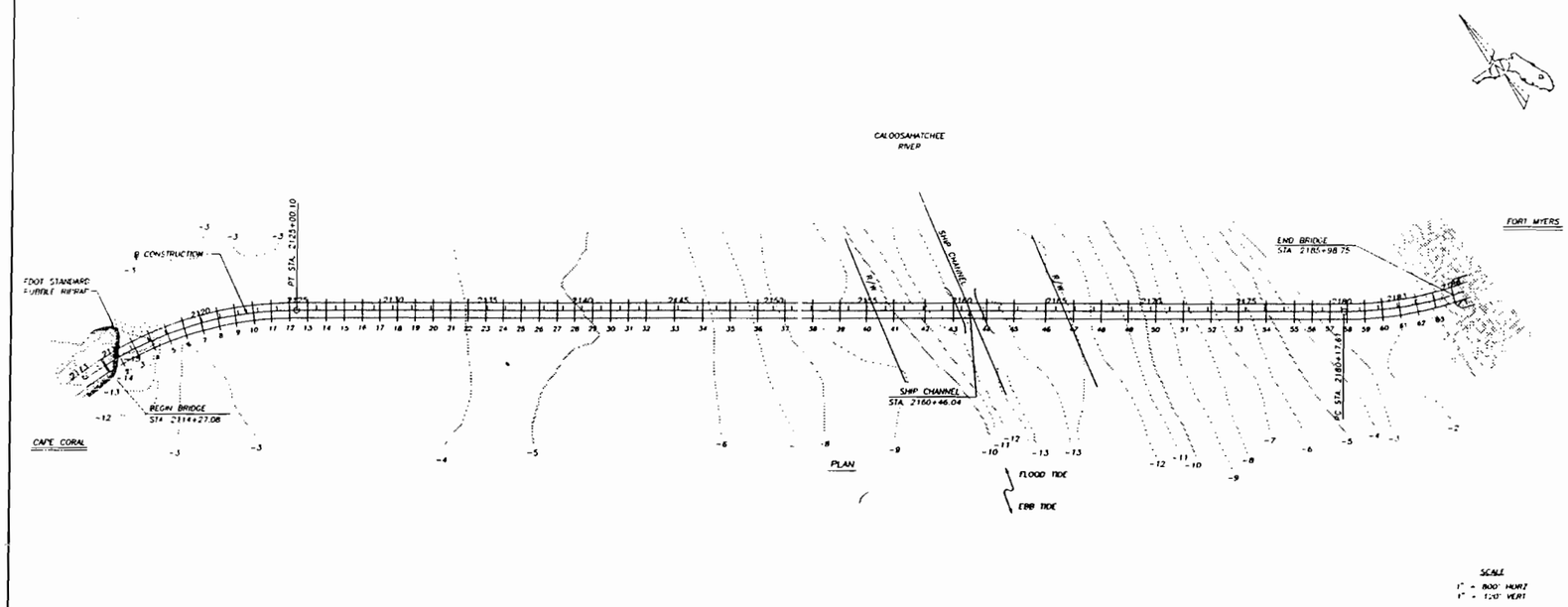

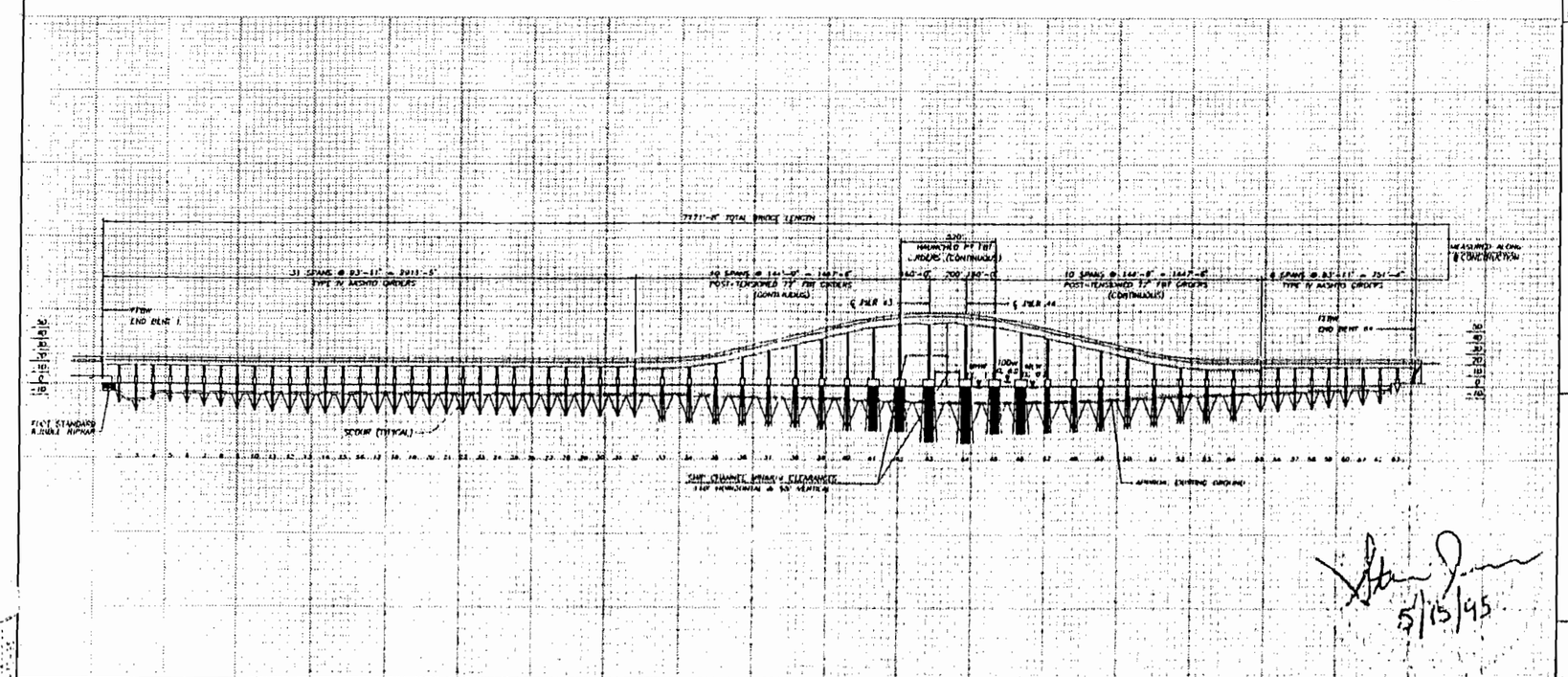

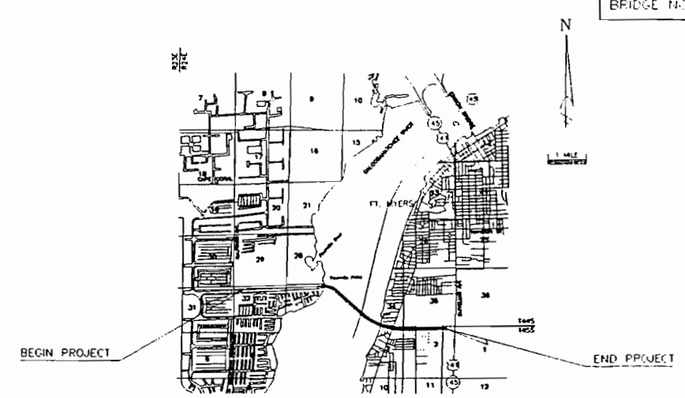

NOTE: BASIN BOUNDARY NOT APPLICABLE SINCE, THE SCOUR POTENTIAL IS A RESULT OF STORM SURGE

BASIN MAP
MIDPOINT BRIDGE

(REFERENCE)	EDISON BRIDGE (1)	EXISTING STRUCTURES (2)	(3)	ASSUMED CONFIGURATION
FOUNDATION	CONC. PILES	CONC. PILES		CONCRETE PIERS
OVERALL LENGTH	4,475'	4,597'		7,171' - 8"
SPAN LENGTH	145 @ 30', 1 @ 111'	143'		SEE PROFILE
TYPE CONSTRUCTION	C. D. & G. W/ST. DR. SP.	PRECAST CONCRETE		SEE PROFILE
AREA OF OPENING @ H.W.	N/A	69,500 SF		82,214 SF
ROADWAY WIDTH	22'	56'		80'
ELEV. LOW MEMBER	N/A	13.3'		13.1'

HYDRAULIC DESIGN DATA

NOTE

The hydraulic data is shown for informational purposes only to indicate the flood discharge and water surface elevations which may be anticipated in any given year. This data was generated using highly variable factors determined by a study of the watershed. Many judgements and assumptions are required to establish these factors. The resultant hydraulic data is sensitive to changes, particularly antecedent conditions, urbanization, channelization and land use. Users of this data are cautioned against the assumption of precision which cannot be attained.

DEFINITIONS:

Design Flood: The flood utilized to assure a desired level of hydraulic performance.

Base Flood: The flood having a 1% chance of being exceeded in any year (100 year Frequency)

Overtopping Flood: The flood which causes flow over the highway, over a watershed divide or thru emergency relief structures.

Greatest Flood: The most severe flood which can be predicted where overtopping is not practicable.

WATER SURFACE ELEVATIONS. N.H.W. (NON-TIDAL) M.H.W. 1.1' NGVD M.L.W. 0.2' NGVD ☐ OVERTOPPING FLOOD ☐ GREATEST FLOOD

FLOOD DATA:	MAX EVENT OF RECORD	DESIGN FLOOD	BASE FLOOD	GREATEST FLOOD
STAGE ELEV NGVD (FT)	10 (1926)	7.0 (FEMA)	8.2 (FEMA)	10.4
DISCHARGE (CFS)	N/A	N/A	N/A	285,000
AVERAGE VELOCITY (FPS)	N/A	N/A	2.2	3.0
EXCEEDANCE PROB (%)	N/A	2.0%	1.0%	0.20%
FREQUENCY (YR)	N/A	50 YR	100 YR	500 YR

HYDRAULIC RECOMMENDATIONS

1. BEGIN BRIDGE STATION 2114+27.08 END BRIDGE STATION 2185+98.75 SKEW ANGLE 23.63°
2. CHANNEL SECTION ℄ STATION 2160+46.04 BOTTOM WIDTH 55' ELEV. -14 (NGVD) SIDE SLOPE 100:1
3. LIMITS OF CHANNEL EXCAVATION N/A RT. NONE LT. NONE
4. CLEARANCE NAVAGATION HORIZ. 110' VERT. 55' ABOVE EL. 1.1 DRIFT: HORIZ. 55' VERT. 5.0' ABOVE EL. 8.2 100 YR
5. SCOUR PREDICTION Max Abutment Scour = 23.0 feet; Max Scour = 32.2 feet; Max Contraction Scour = 10.8 feet. Max Total Scour = 43.0 feet
6. SLOPE PROTECTION Project EB1 with FDOT standard Rubble Riprap
7. DECK DRAINAGE: Scuppers
8. OTHER

REMARKS: Hydraulic analysis of the river indicated that peak flows did not occur at the peak tide. Peak flows and their associated stages were used in the scour analysis. The flooding result from coastal storm surge

5/15/95

REVISIONS																							
DATE	BY	DESCRIPTION	DATE	BY	DESCRIPTION	DATE	BY	DESCRIPTION	DESIGNED BY	NAME E.S.	DATE 9-31-95	DRAWN BY	NAME F.C./R.H.	DATE 8-30-95	CHECKED BY	NAME E.S.	DATE 9-31-95	FLORIDA DEPARTMENT OF TRANSPORTATION APPROVED BY	Greiner	BRIDGE HYDRAULIC RECOMMENDATIONS

PROJECT NO.	SHEET NO.
5896	C-13

BX1-21

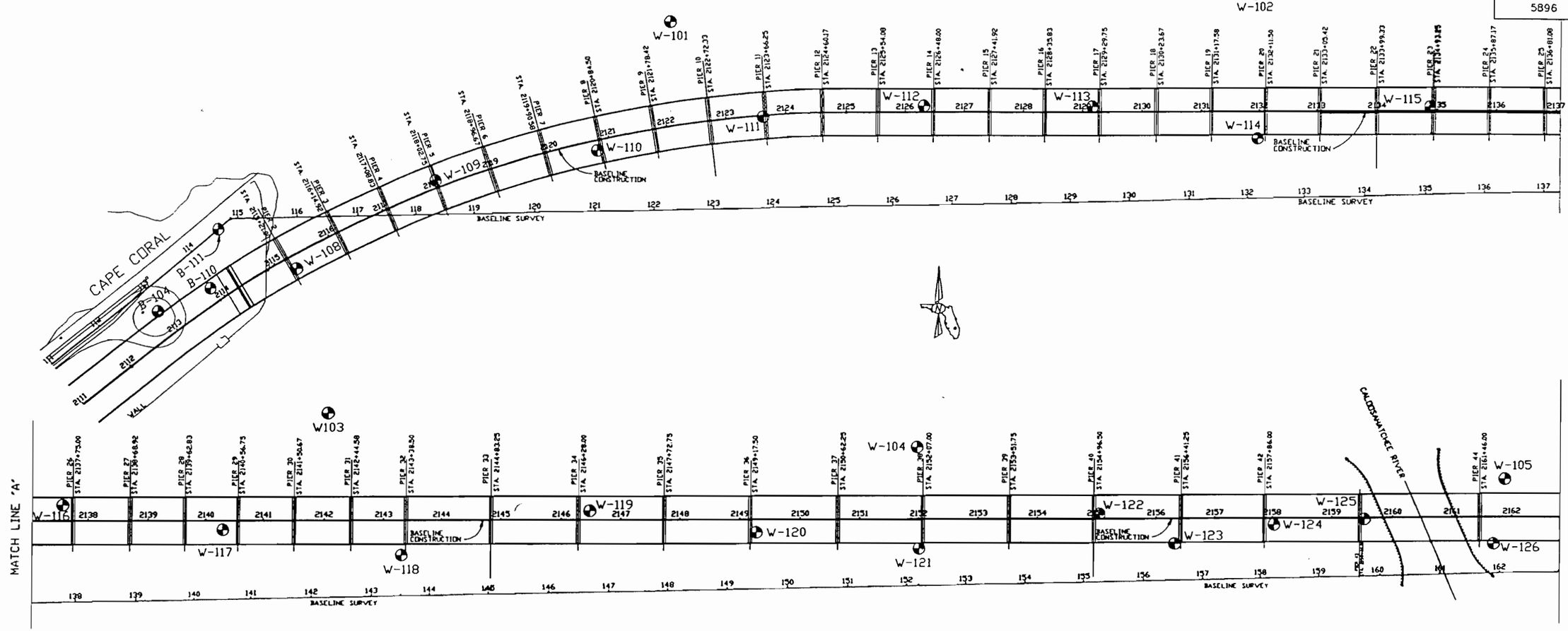

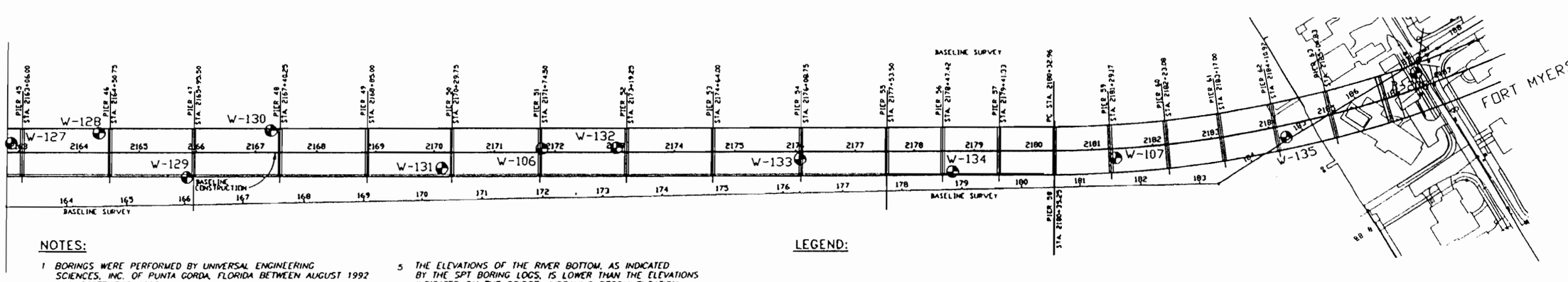

NOTES:

1. BORINGS WERE PERFORMED BY UNIVERSAL ENGINEERING SCIENCES, INC. OF PUNTA GORDA, FLORIDA BETWEEN AUGUST 1992 AND SEPTEMBER 1993.
2. BORINGS WERE STANDARD PENETRATION TEST (S.P.T.) BORINGS IN GENERAL ACCORDANCE WITH A.S.T.M. D-1586.

   SPOON SAMPLER: 1 3/8" INSIDE DIAMETER, 2" OUTSIDE DIAMETER
   WEIGHT OF HAMMER: 140 POUNDS
   AVERAGE HAMMER DROP: 30 INCHES

3. ▼ INDICATES GROUNDWATER TABLE OBSERVED 24 HOURS AFTER DRILLING COMPLETION.
4. NUMBERS ON LEFT SIDE OF BORING LOGS INDICATE S.P.T. BLOW COUNT FOR 12 INCHES OF PENETRATION.
5. THE ELEVATIONS OF THE RIVER BOTTOM, AS INDICATED BY THE SPT BORING LOGS, IS LOWER THAN THE ELEVATIONS INDICATED ON THE BRIDGE HYDRAULIC RECOMMENDATION DRAWING, SHEET C-12. THE ELEVATIONS GIVEN ON SHEET C-12 INDICATE THE ACTUAL RIVER BOTTOM, TOP OF MUD LINE. THE DIFFERENCE ARISES FROM THE NON-CONTRIBUTING RESISTANCE CAPACITY OF THE SOFT RIVER BOTTOM WHEN THE SPT PROBE IS LOWERED FROM THE DRILLING PLATFORM.

LEGEND:

- SHELBY TUBE
- WATER
- ASPHALT OR ASPHALT AND LIMEROCK BASE
- ⊕ TEST PILE LOCATION
- BORING LOCATION
- CLAY
- SAND
- LIMESTONE (LIMEROCK)

Chuck Green 5/11/95

GRAPHIC SCALE
100' 0 100'

REVISIONS											
DATE	BY	DESCRIPTION	DATE	BY	DESCRIPTION	DATE	BY	DESCRIPTION	DATE	BY	DESCRIPTION

	NAME	DATE
DR. BY	D.B.B.	2-94
CHK. BY	K.O.G.	2-94
SUPV	C.H.E.	2-94

Greiner, Inc. Tampa, Florida

Engineers, Architects and Planners

BOARD OF COUNTY COMMISSIONERS
LEE COUNTY, FLORIDA
DEPARTMENT OF TRANSPORTATION

MIDPOINT BRIDGE
BORING LOCATION PLAN

LAN.DWG

PROJECT NO.	SHEET NO.
5896	C-14

BX1-22

FOR NOTES, LEGEND AND LOCATION, SEE BORING LOCATION PLAN.

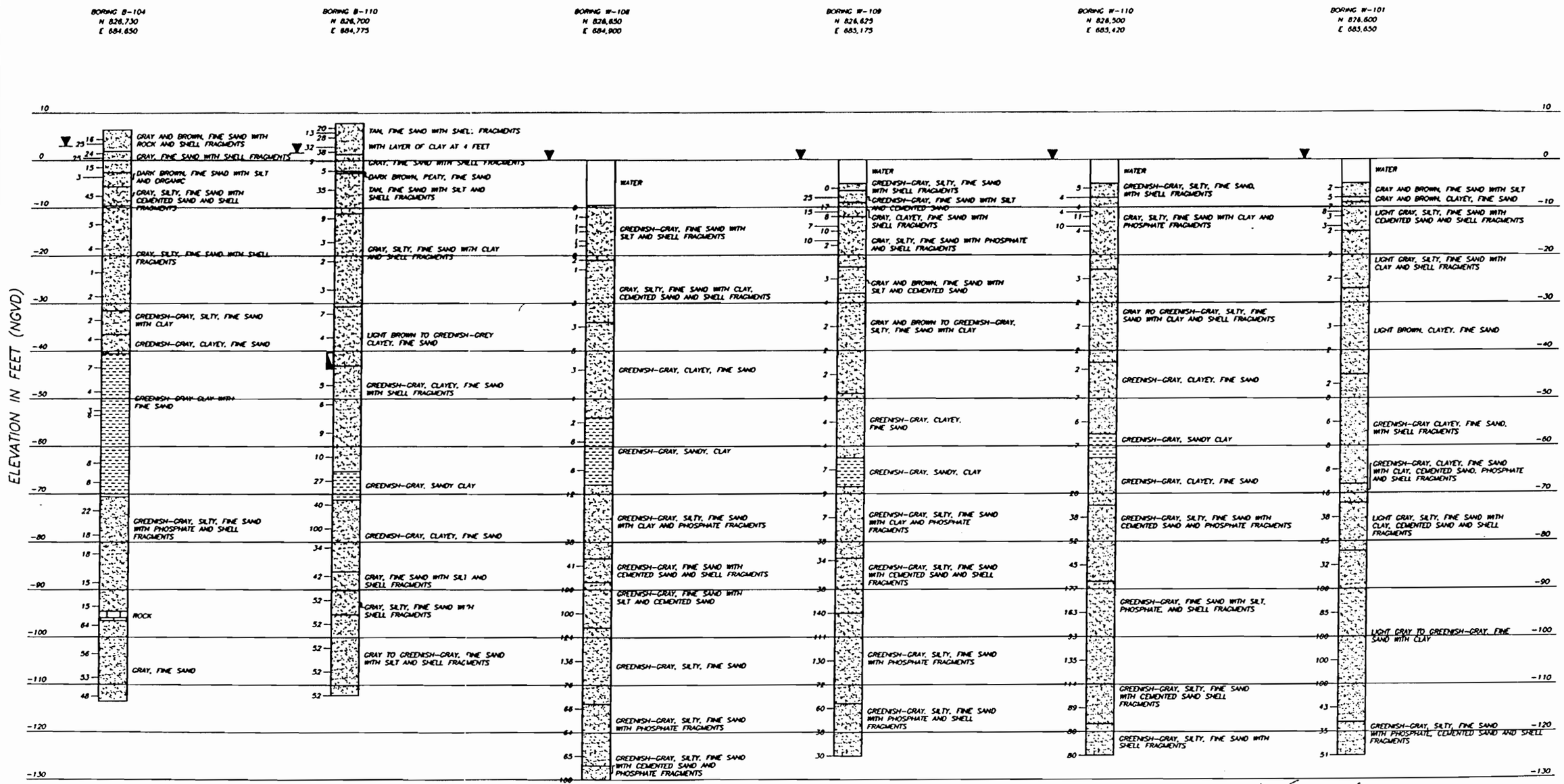

Chuck Greiner 5/11/95

GRAPHIC SCALE

10' 0 10'

REVISIONS																		
BY	DESCRIPTION	DATE	BY	DESCRIPTION	DATE	BY	DESCRIPTION	DATE	BY	DESCRIPTION		NAME	DATE
											DR.BY	I.Z.	2-94
											CHK.BY	K.O.G.	2-94
											SUPV.	C.H.E	2-94

Greiner Greiner, Inc. Tampa, Florida

Engineers, Architects and Planners

BOARD OF COUNTY COMMISSIONERS
LEE COUNTY, FLORIDA
DEPARTMENT OF TRANSPORTATION

MIDPOINT BRIDGE
REPORT OF CORE BORINGS (1)

LOG-3A.DWG

PROJECT NO.	SHEET NO.
5896	C-15

BX1-23

FOR NOTES, LEGEND AND LOCATION, SEE BORING LOCATION PLAN.

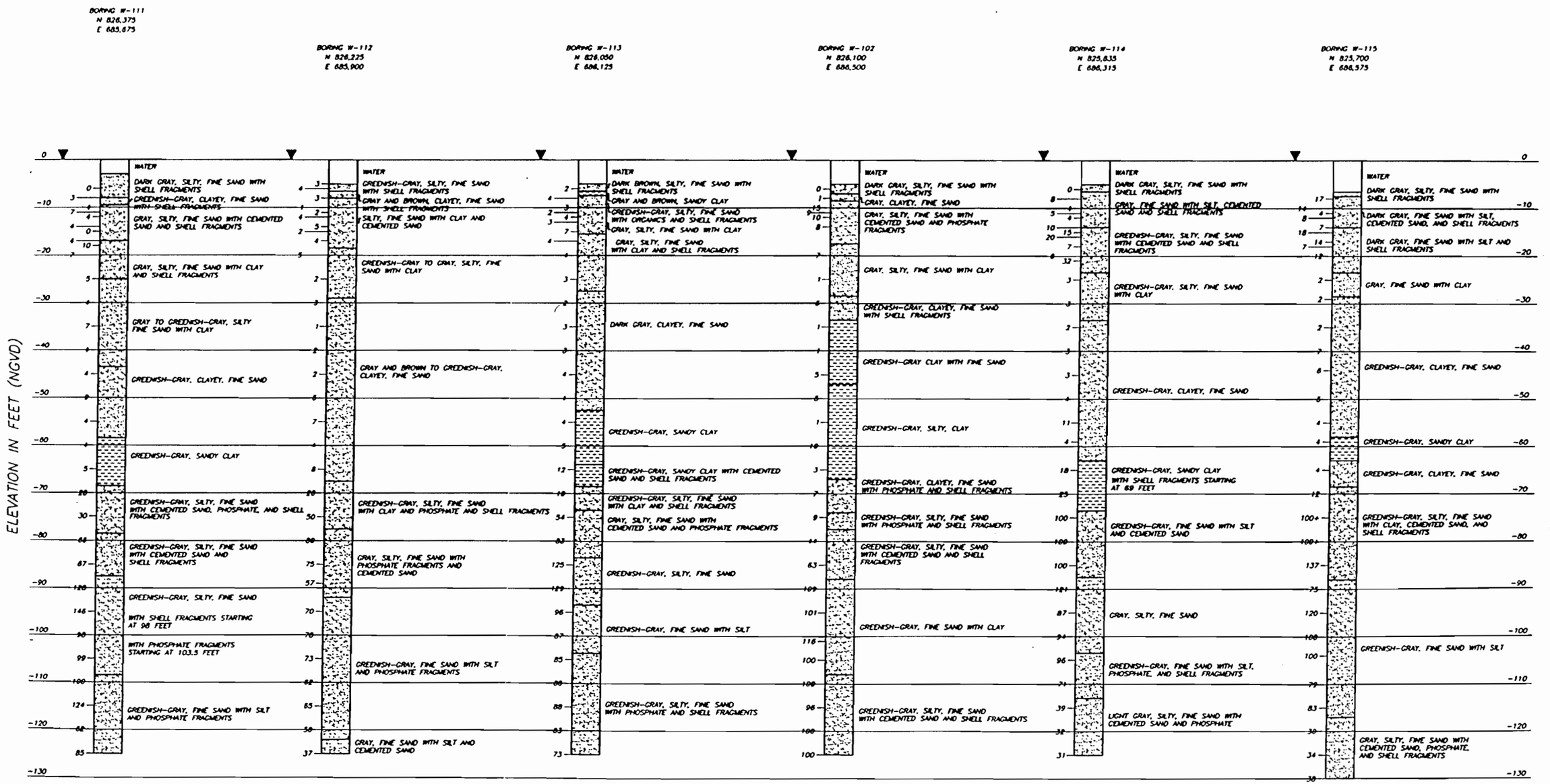

Chuck Greiner
5/11/95

GRAPHIC SCALE

10' 0 10'

REVISIONS																	
BY	DESCRIPTION	DATE	BY	DESCRIPTION	DATE	BY	DESCRIPTION	DATE	BY	DESCRIPTION		NAME	DATE	Greiner Greiner, Inc. Tampa, Florida	Engineers, Architects and Planners	BOARD OF COUNTY COMMISSIONERS LEE COUNTY, FLORIDA DEPARTMENT OF TRANSPORTATION	MIDPOINT BRIDGE REPORT OF CORE BORINGS (2)
											DR.BY	I.Z.	2-94				
											CHK.BY	K.O.G.	2-94				
											SUPV.	C.H.E	2-94				

LOG-3B.DWG

PROJECT NO.	SHEET NO
5896	C-16

BX1-24

FOR NOTES, LEGEND AND LOCATION, SEE BORING LOCATION PLAN.

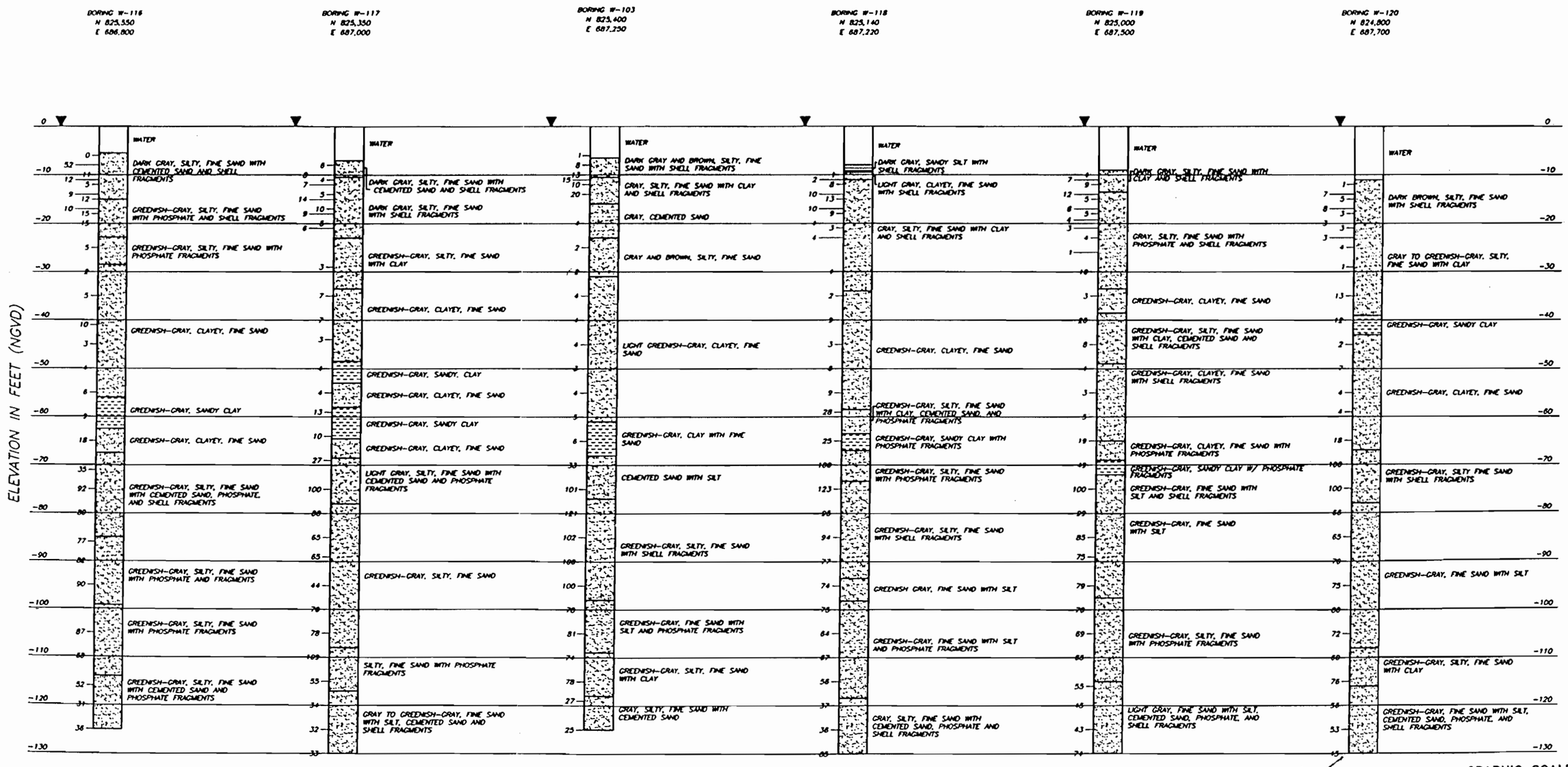

Chuck Greiner 5/11/95

GRAPHIC SCALE

10' 0 10'

REVISIONS											
DATE	BY	DESCRIPTION	DATE	BY	DESCRIPTION	DATE	BY	DESCRIPTION	DATE	BY	DESCRIPTION

	NAME	DATE
DR.BY	I.Z.	2-94
CHK.BY	K.O.G.	2-94
SUPV	C.H.E.	2-94

Greiner Greiner, Inc. Tampa, Florida

Engineers, Architects and Planners

BOARD OF COUNTY COMMISSIONERS
LEE COUNTY, FLORIDA
DEPARTMENT OF TRANSPORTATION

MIDPOINT BRIDGE
REPORT OF CORE BORINGS (3)

LOG-3C.DWG

PROJECT NO.	SHEET NO.
5896	C-17

BX1-25

FOR NOTES, LEGEND AND LOCATION, SEE BORING LOCATION PLAN.

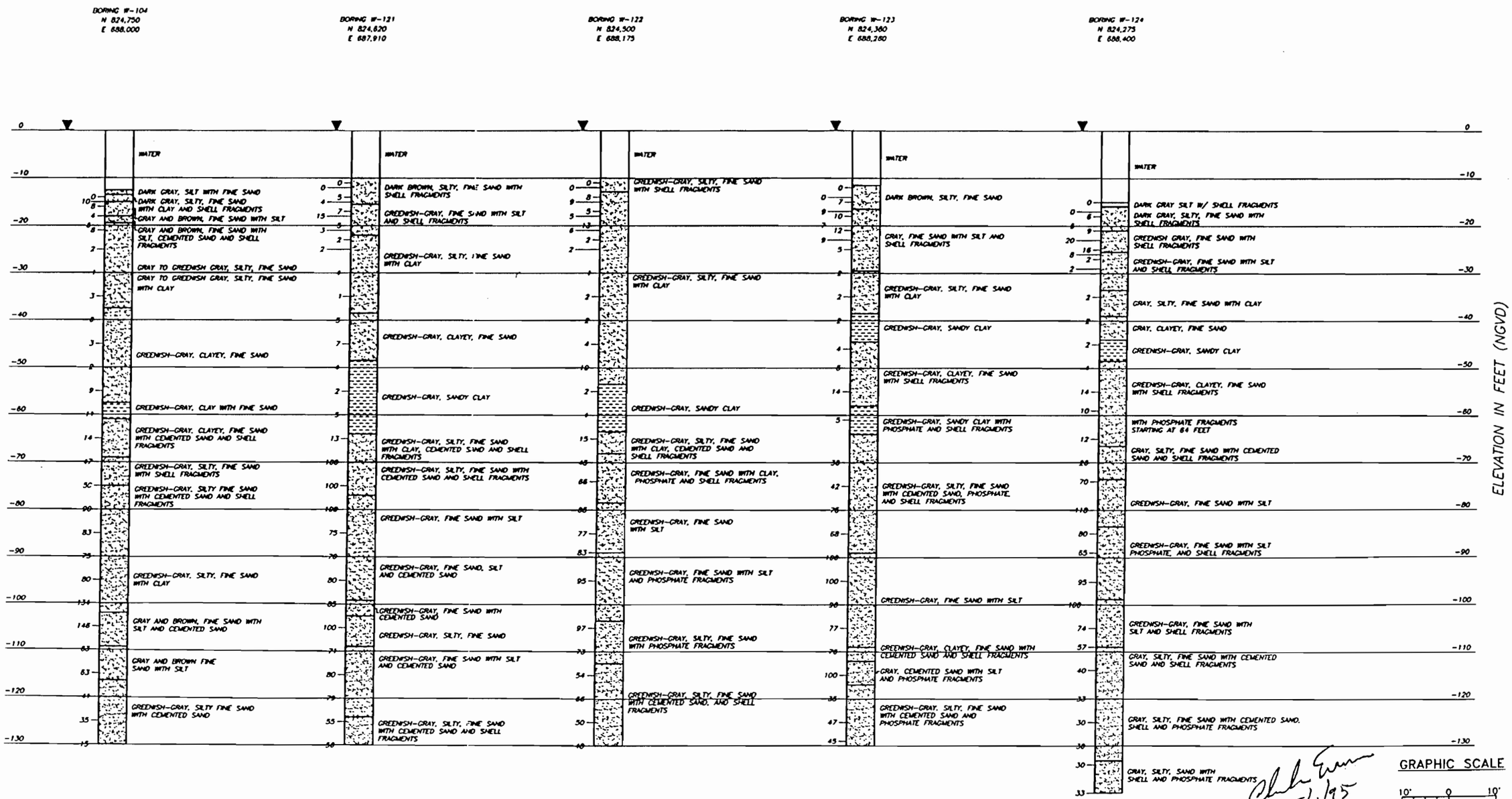

REVISIONS																	
DATE	BY	DESCRIPTION	DATE	BY	DESCRIPTION	DATE	BY	DESCRIPTION	DATE	BY	DESCRIPTION		NAME	DATE
												DR.BY	I.Z.	2-94
												CHK.BY	K.O.G.	2-94
												SUPV.	C.H.F.	2-94

Greiner Greiner, Inc. Tampa, Florida

Engineers, Architects and Planners

BOARD OF COUNTY COMMISSIONERS
LEE COUNTY, FLORIDA
DEPARTMENT OF TRANSPORTATION

MIDPOINT BRIDGE
REPORT OF CORE BORINGS (4)

LOG-3D.DWG

PROJECT NO.	SHEET NO.
5896	C-18

BX1-26

FOR NOTES, LEGEND AND LOCATION, SEE BORING LOCATION PLAN.

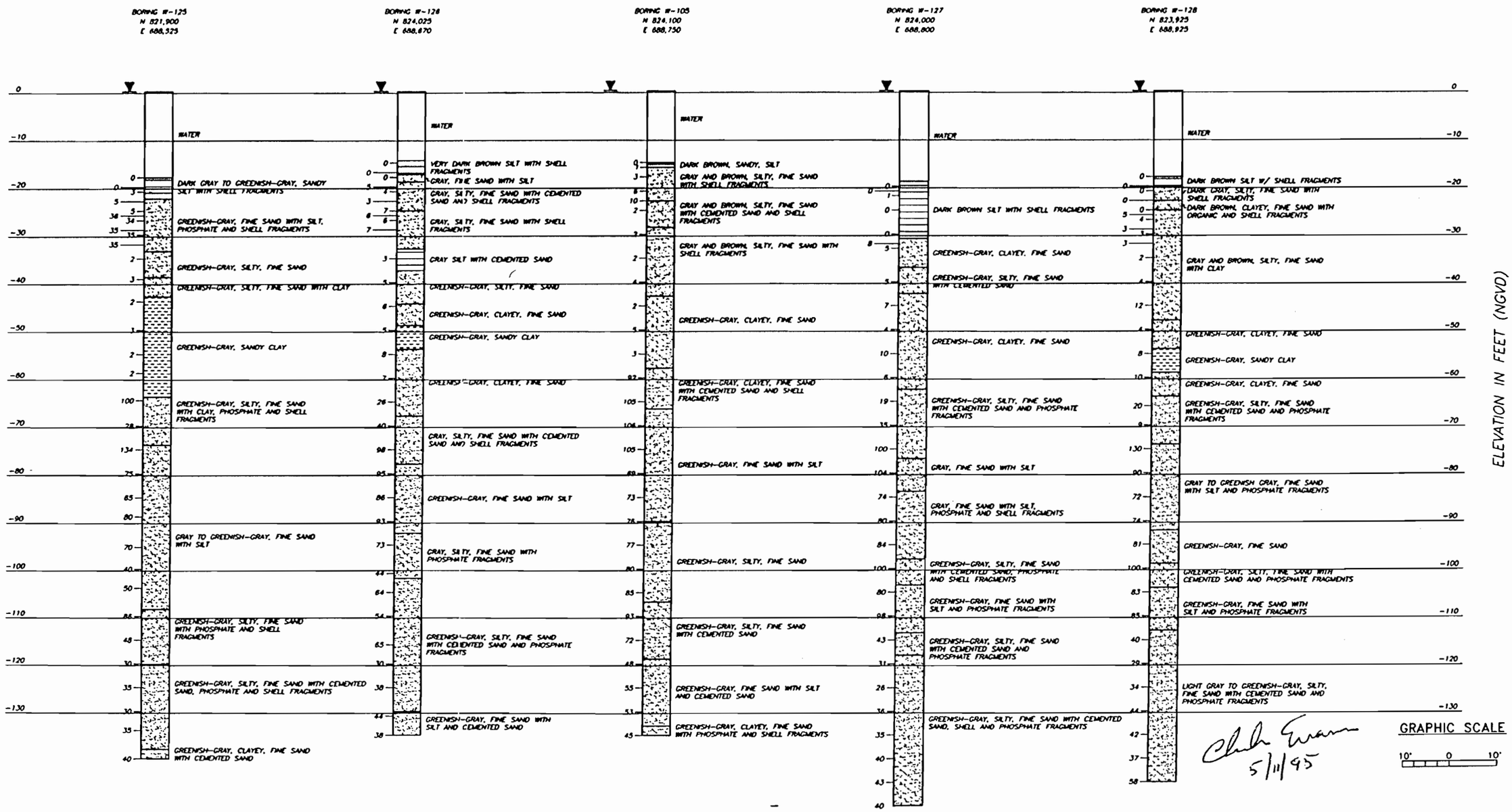

Chuck Evans
5/11/95

REVISIONS																	
DATE	BY	DESCRIPTION	DATE	BY	DESCRIPTION	DATE	BY	DESCRIPTION	DATE	BY	DESCRIPTION		NAME	DATE
												DR.BY	I.Z.	2-94
												CHK.BY	K.O.G.	2-94
												SUPV	C.H.E	2-94

Greiner Greiner, Inc. Tampa, Florida

Engineers, Architects and Planners

BOARD OF COUNTY COMMISSIONERS
LEE COUNTY, FLORIDA
DEPARTMENT OF TRANSPORTATION

MIDPOINT BRIDGE
REPORT OF CORE BORINGS (5)

LOG-3E.DWG

PROJECT NO.	SHEET NO
5896	C-19

BX1-27

FOR NOTES, LEGEND AND LOCATION, SEE BORING LOCATION PLAN.

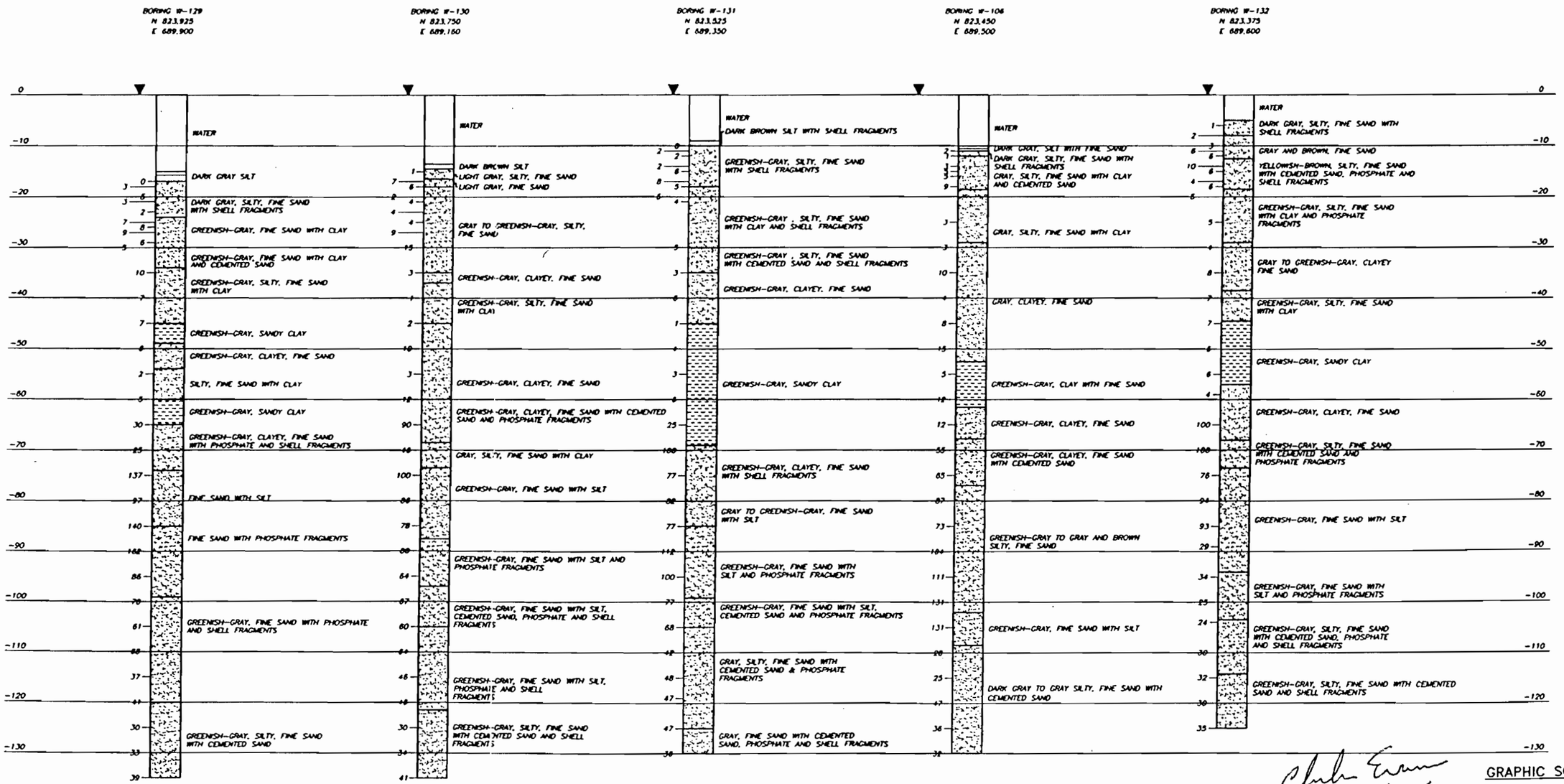

Chuck Evans
5/11/95

GRAPHIC SCALE

10' 0 10'

REVISIONS											
DATE	BY	DESCRIPTION	DATE	BY	DESCRIPTION	DATE	BY	DESCRIPTION	DATE	BY	DESCRIPTION

	NAME	DATE
DR.BY	I.Z.	2-94
CHK.BY	K.O.G.	2-94
SUPV.	C.H.E	2-94

Greiner Greiner, Inc. Tampa, Florida

Engineers, Architects and Planners

BOARD OF COUNTY COMMISSIONERS
LEE COUNTY, FLORIDA
DEPARTMENT OF TRANSPORTATION

MIDPOINT BRIDGE
REPORT OF CORE BORINGS (6)

LOG-3F.DWG

PROJECT NO.	SHEET NO.
5896	C-20

BX1-28

FOR NOTES, LEGEND AND LOCATION, SEE BORING LOCATION PLAN.

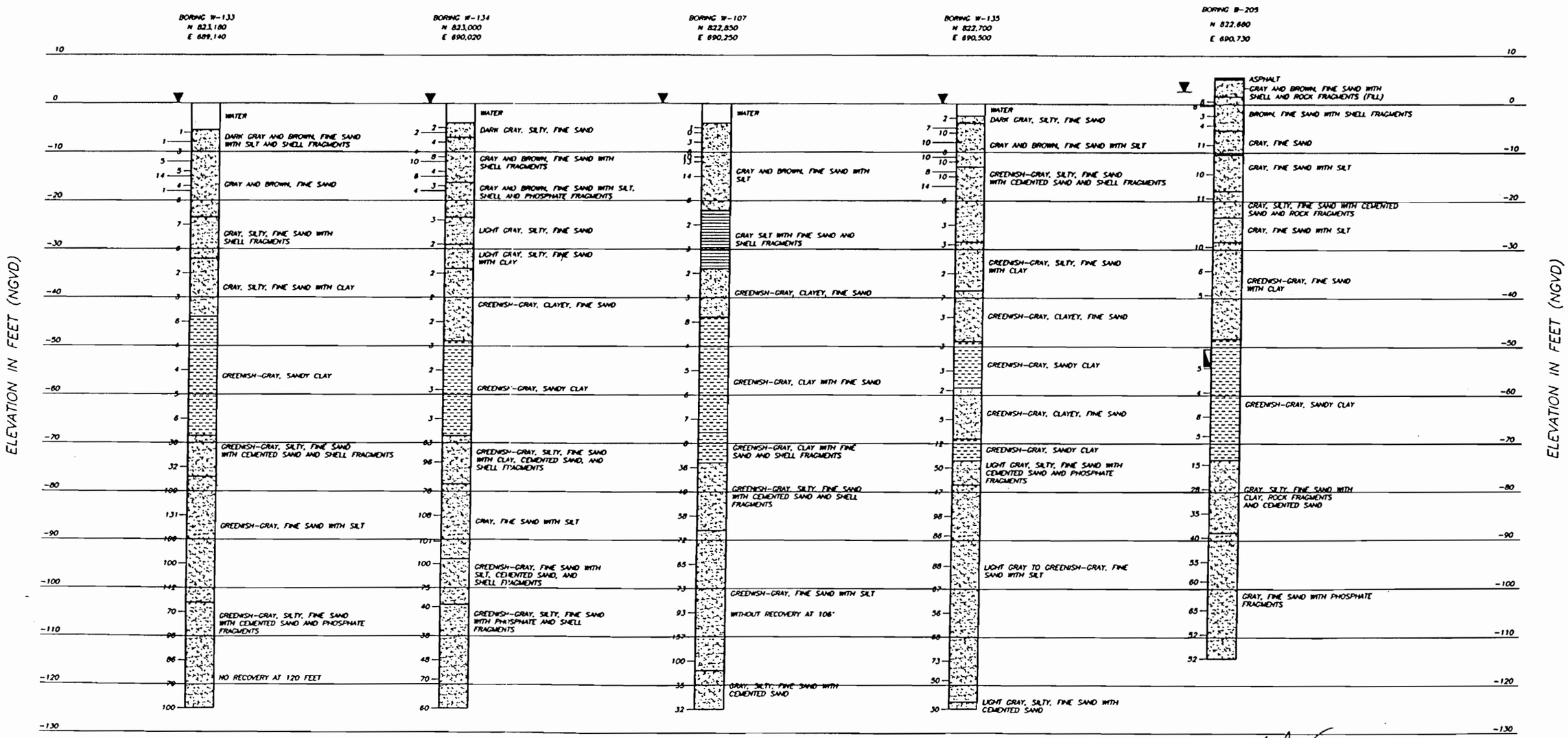

5/11/95

GRAPHIC SCALE

10' 0 10'

REVISIONS											
DATE	BY	DESCRIPTION	DATE	BY	DESCRIPTION	DATE	BY	DESCRIPTION	DATE	BY	DESCRIPTION

	NAME	DATE
DR.BY	I.Z.	2-94
CHK.BY	K.O.G.	2-94
SUPV.	C.H.E	2-94

Greiner Greiner, Inc. Tampa, Florida

Engineers, Architects and Planners

BOARD OF COUNTY COMMISSIONERS
LEE COUNTY, FLORIDA
DEPARTMENT OF TRANSPORTATION

MIDPOINT BRIDGE
REPORT OF CORE BORINGS (7)

LOG-3G.DWG

NOTES

1. ALL PILES TO BE PRESTRESSED CONCRETE 18" SQUARE AT ENDBENTS AND 24" SQUARE AT PIERS. SEE SHEETS A-3 AND A-4. FOR PILE DETAILS.

2. PILES SHALL BE INSTALLED IN ACCORDANCE WITH SECTION 455 OF THE PROJECT'S SUPPLEMENTAL SPECIFICATIONS.

3. LEGEND:
   - □ DENOTES PLUMB PILE
   - ◄□ DENOTES BATTERED PILE IN DIRECTION SHOWN.
     BATTER FOR PROPOSED PILES:
     END BENTS- 2" PER FOOT
     PIER - 3" PER FOOT

4. PILE SPACINGS SHOWN ARE ALONG FFBW AT BOTTOM OF END BENT CAP AND ALONG ℄ OF PIER AT BOTTOM OF FOOTING CAP.

5. FOR BORING LOCATIONS AND REPORT OF CORE BORINGS. SEE SHEETS C-13 THRU C-20.

6. A DYNAMIC LOAD TEST SHALL BE PERFORMED ON ALL TEST PILES AS PER SECTION 455-3.14 OF SUPPLEMENTAL SPECIFICATION 455. DYNAMIC LOAD TEST SHALL BE INCLUDED IN THE CONTRACT UNIT PRICE FOR BID ITEM 455-137 (DYNAMIC TEST LOAD).

7. THE DRIVING CRITERIA FOR PRODUCTION PILES SHALL BE DETERMINED BY WAVE EQUATION ANALYSIS USING THE RESULTS OF THE DYNAMIC LOAD TESTS (PDA). THE REQUIRED DRIVING RESISTANCE (RDR) SHALL BE COMPUTED AS FOLLOWS:

   PIERS (RDR) - (DESIGN LOAD) X F.S. + TOTAL SCOUR RESISTANCE
   ENDBENTS (RDR) - (DESIGN LOAD) X F.S. + DOWN DRAG

   WHERE F.S. IS THE FACTOR OF SAFETY DEFINED IN SPECIFICATION 455-3.12.2

8. PRODUCTION PILES SHALL BE DRIVEN TO THE MINIMUM TIP ELEVATIONS AND BEYOND UNTIL THE DRIVING CRITERIA FOR THE DESIGN LOAD HAS BEEN MET.

9. FOR LOADING CASE WITH SHIP IMPACT (1.0 WSI + 1.0 DL), PIERS 32 THRU 56 WERE CHECKED FOR ULTIMATE STRENGTH BASED ON THE FOLLOWING ULTIMATE CAPACITIES UNDER 50% OF 100 YR EVENT SCOUR CONDITIONS:

   COMPRESSION : 331 TONS
   UPLIFT : 125 TONS (INCLUDES WEIGHT OF PILE)

10. FOR PILE CUT-OFF ELEVATIONS. SEE INDIVIDUAL END BENT & FOOTING SHEETS.

11. FOR FENDER SYSTEM PILE REQUIREMENTS. SEE SHEETS C111 & C112.

12. FOR CURVE DATA. SEE SHEET C-5.

13. THE PORTION OF THE PILES EXPOSED ABOVE EXISTING GROUND FOR THE END BENTS SHALL BE WRAPPED WITH TWO SHEETS OF POLYETHYLENE PLASTIC FILM IN ACCORDANCE WITH SECTION 459 OF THE SPECIAL PROVISIONS.

14. NO JETTING WILL BE ALLOWED FOR THE TEST PILE OR PERMANENT PILE INSTALLATION DUE TO ENVIRONMENTAL CONCERNS.

15. PILING DRIVING WORK AT END BENT 1 AND 64 SHALL BE COORDINATED WITH THE PROPRIETARY RETAINING WALL CONSTRUCTION OF BID PACKAGES 1 AND 3. THE TEMPORARY PROPRIETARY RETAINING WALL SHALL BE IN PLACE FOR THE REQUIRED PRE-LOADING PERIOD (AS DIRECTED BY THE ENGINEER).

PILE INSTALLATION TABLE

LOCATION	PILES NOS.	PILE SIZE	DESIGN LOAD (TONS)	SCOUR ELEVATION (100 YR)	TOTAL SCOUR (100 YR) RESISTANCE (TONS)	DOWNDRAG (TONS)	MIN. TIP ELEVATION	TEST PILE NO.	TEST PILE LENGTH (FT)
ENDBENT 1	1 - 11	18"	100	- 26.0	NA	50	- 80.0	4	105
PIER 2	1 - 8	24"	200	- 26.0	4.0	NA	- 85.0	7	100
PIER 3				- 32.0				-	
PIER 4				- 28.0				2	
PIER 5				- 21.0				-	
PIER 6				- 23.0				7	
PIER 7				- 24.0				-	
PIER 8				- 25.0				2	
PIER 9				- 26.0				-	
PIER 10				- 27.0				7	
PIER 11				- 28.0				-	
PIER 12				- 29.0				2	
PIER 13				- 30.0	6.0			-	
PIER 14								7	
PIER 15								-	
PIER 16								2	
PIER 17								-	
PIER 18								7	
PIER 19								-	
PIER 20								2	
PIER 21								-	
PIER 22				- 31.0				7	
PIER 23				- 32.0				-	
PIER 24				- 32.0				2	
PIER 25				- 33.0				-	
PIER 26								7	
PIER 27								-	
PIER 28								2	
PIER 29								-	
PIER 30								7	
PIER 31								-	
PIER 32	1 - 32		165					22	
PIER 33									
PIER 34									
PIER 35				- 40.0	8.0				
PIER 36				- 41.0					
PIER 37	1 - 38			- 43.0				26	
PIER 38				- 43.0					
PIER 39				- 45.0					
PIER 40									
PIER 41	1 - 44							30	
PIER 42				- 46.0					
PIER 43				- 55.0	10.0				
PIER 44				- 56.0					
PIER 45				- 49.0	8.0				
PIER 46									
PIER 47	1 - 38							26	
PIER 48				- 48.0					
PIER 49				- 46.0					
PIER 50				- 45.0					
PIER 51	1 - 32			- 43.0				22	
PIER 52				- 40.0					
PIER 53				- 40.0					
PIER 54				- 38.0	6.0				
PIER 55				- 32.0					
PIER 56	1 - 8		200	- 30.0				-	
PIER 57				- 29.0	4.0			2	
PIER 58				- 28.0				-	
PIER 59				- 27.0				7	
PIER 60				- 25.0				-	
PIER 61				- 25.0				2	
PIER 62				- 23.0				-	
PIER 63				- 20.0				7	
ENDBENT 64	1 - 11	18"	100	-	NA	50	- 80.0	4	105

N. Jarrett 5-11-95

PROJECT NO	SHEET NO
5896	C-22

BX1-30

DISK&DRAW: C26000.CADD.FG | BF NOW/P03.FG3

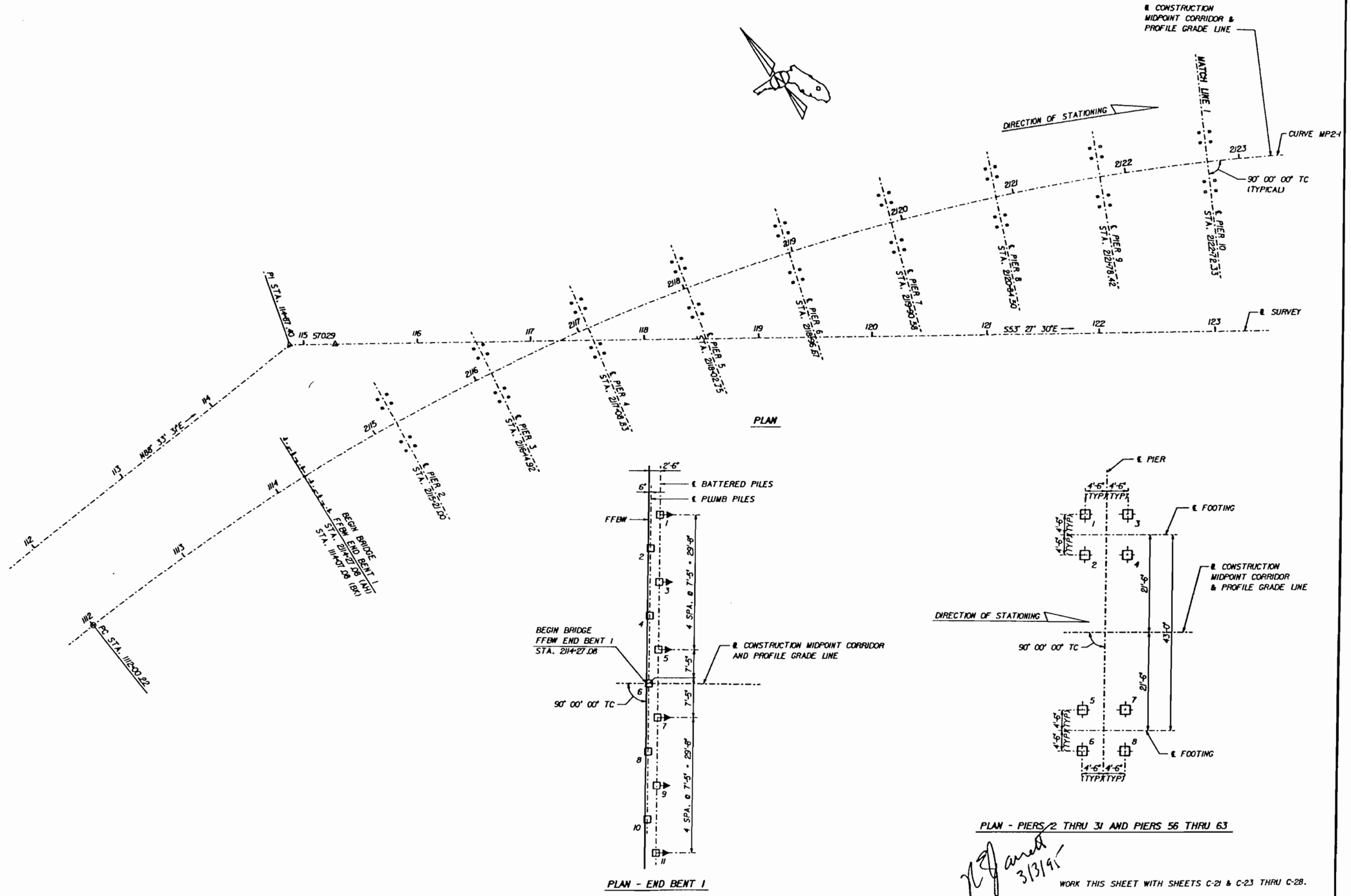

3/13/95

WORK THIS SHEET WITH SHEETS C-21 & C-23 THRU C-28.

REVISIONS											
DATE	BY	DESCRIPTION	DATE	BY	DESCRIPTION	DATE	BY	DESCRIPTION	DATE	BY	DESCRIPTION

	NAME	DATE
DR. BY	BDW	6/93
CHK. BY	REJ	1/94
SUPV.	REJ	1/94

Greiner Greiner, Inc. Tampa, Florida

Engineers, Architects and Planners

BOARD OF COUNTY COMMISSIONERS
LEE COUNTY, FLORIDA
DEPARTMENT OF TRANSPORTATION

MIDPOINT BRIDGE
FOUNDATION LAYOUT (1)

FILECCTY

PLOTTED: 27JAN95-08:18:10

PROJECT NO.	SHEET NO.
5896	C-23

BX1-31

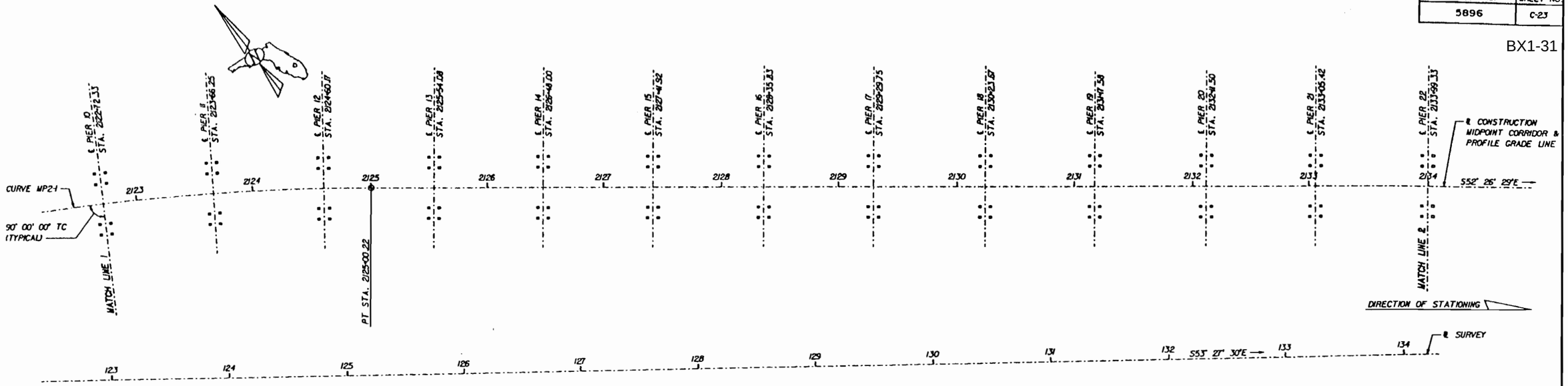

PLAN

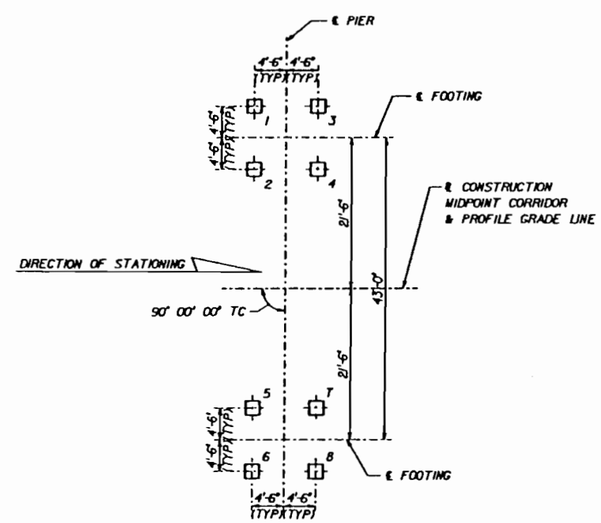

PLAN - PIERS 2 THRU 31 AND PIERS 56 THRU 63

3/3/95

WORK THIS SHEET WITH SHEETS C-21,C-22 & C-24 THRU C-28.

REVISIONS											
DATE	BY	DESCRIPTION	DATE	BY	DESCRIPTION	DATE	BY	DESCRIPTION	DATE	BY	DESCRIPTION

	NAME	DATE
DR. BY	BDW	6/93
CHK. BY	REJ	1/94
SUPV.	REJ	1/94

Greiner Greiner, Inc. Tampa, Florida

Engineers, Architects and Planners

BOARD OF COUNTY COMMISSIONERS
LEE COUNTY, FLORIDA
DEPARTMENT OF TRANSPORTATION

MIDPOINT BRIDGE
FOUNDATION LAYOUT (2)

DISK#DRAW: C:\5000\CADD\FG1 | BF NOMPO4.FG1

FRLEECTY

PLOTTED: 27JAN95-08:19:00

PROJECT NO	SHEET NO
5896	C-24

BX1-32

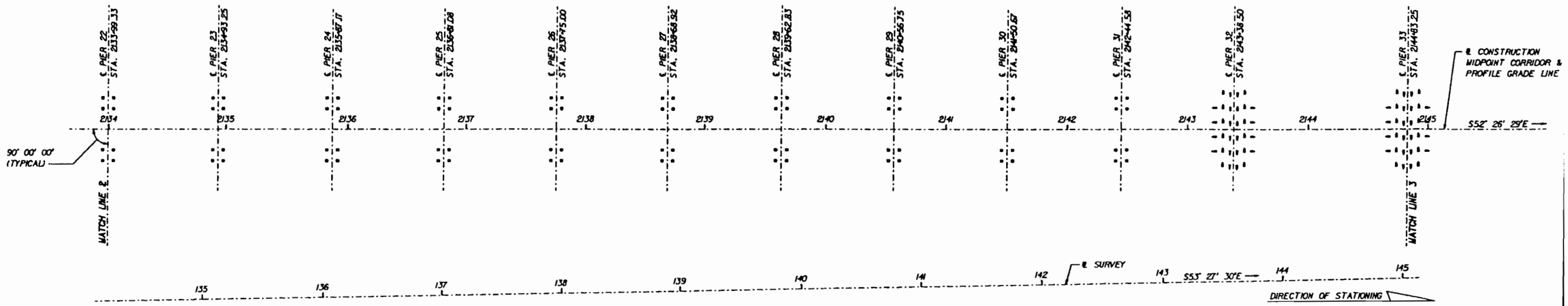

PLAN

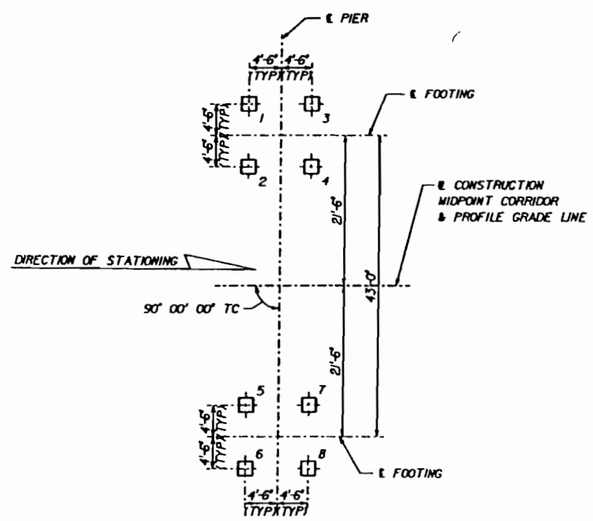

PLAN - PIERS 2 THRU 31 AND PIERS 56 THRU 63

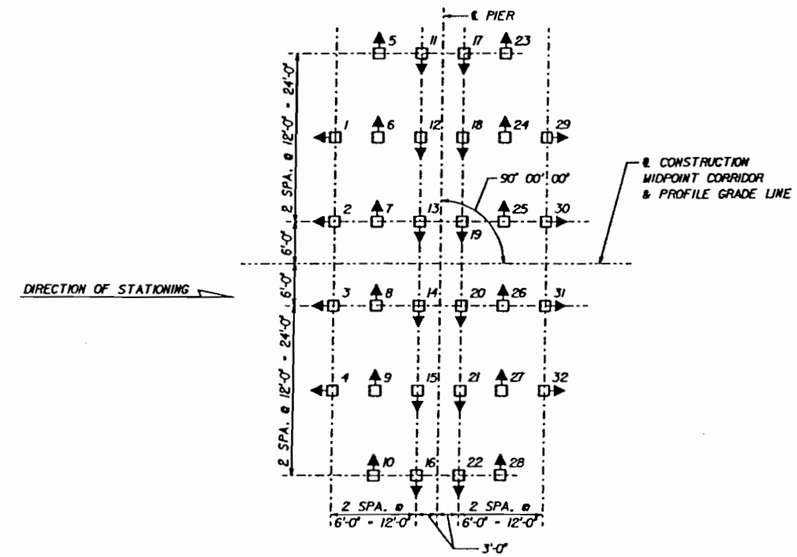

PLAN - PIERS 32 THRU 36 & 51 THRU 55

3/3/95

WORK THIS SHEET WITH SHEETS C-21,C-22,C-23 & C-25 THRU C-28.

REVISIONS											
DATE	BY	DESCRIPTION	DATE	BY	DESCRIPTION	DATE	BY	DESCRIPTION	DATE	BY	DESCRIPTION

	NAME	DATE
DR.BY	BDW	6/93
CHK.BY	REJ	1/94
SUPV.	REJ	1/94

Greiner Greiner, Inc. Tampa, Florida

Engineers, Architects and Planners

BOARD OF COUNTY COMMISSIONERS
LEE COUNTY, FLORIDA
DEPARTMENT OF TRANSPORTATION

MIDPOINT BRIDGE
FOUNDATION LAYOUT (3)

DISK4:DRAW1 C:\5896\CADD.FE1 BFNDUPOS.FGBJ

FRLEECTY

PLOTTED: 27JAN95-08:19:40

PROJECT NO.	SHEET NO
5896	C-25

BX1-33

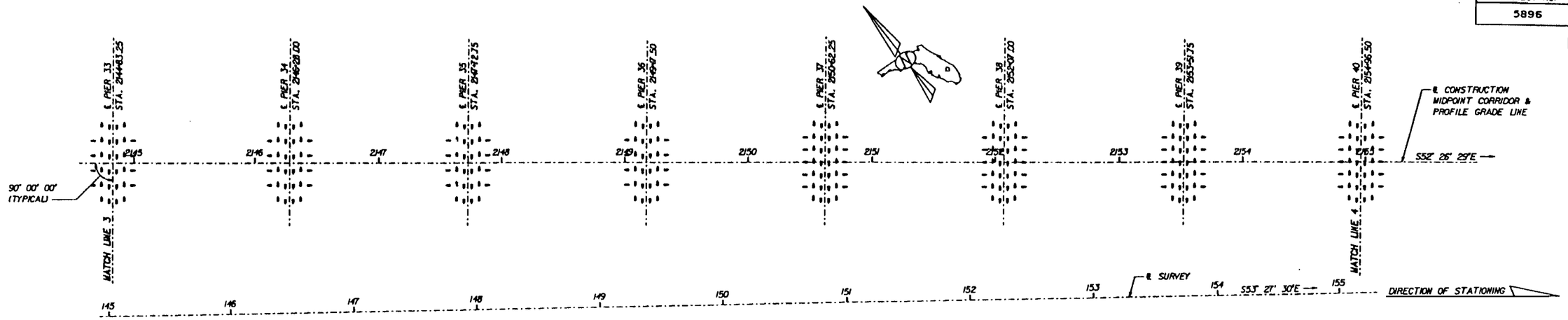

PLAN

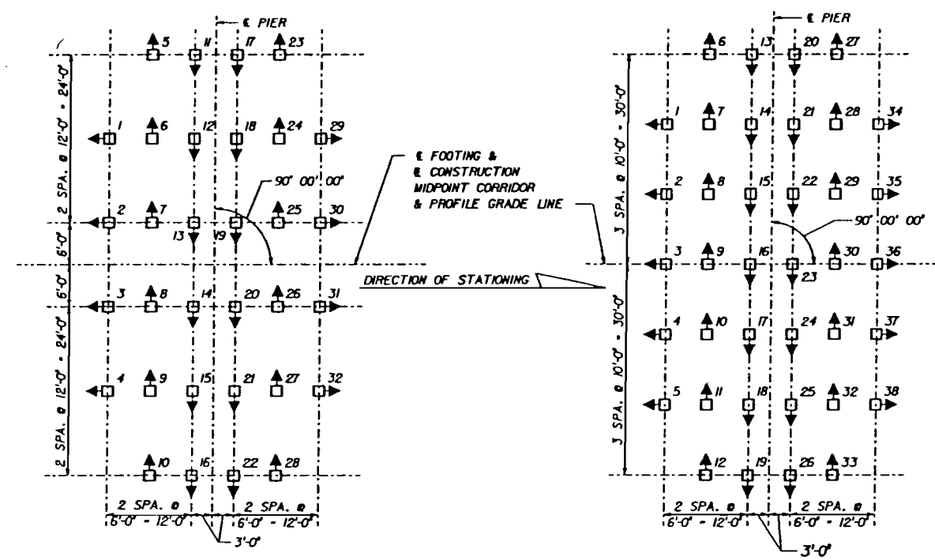

PLAN - PIERS 32 THRU 36 & 51 THRU 55

PLAN - PIERS 37 THRU 40 & 47 THRU 50

3/3/95

WORK THIS SHEET WITH SHEETS C-21 THRU C-24 & C-26 THRU C-28.

REVISIONS											
DATE	BY	DESCRIPTION	DATE	BY	DESCRIPTION	DATE	BY	DESCRIPTION	DATE	BY	DESCRIPTION

	NAME	DATE
DR. BY	BDW	6/93
CHK. BY	REJ	1/94
SUPV.	REJ	1/94

Greiner Greiner, Inc. Tampa, Florida

Engineers, Architects and Planners

BOARD OF COUNTY COMMISSIONERS
LEE COUNTY, FLORIDA
DEPARTMENT OF TRANSPORTATION

MIDPOINT BRIDGE
FOUNDATION LAYOUT (4)

DISK#DRWG: C25000.CADD.FG | BF NOMPOS.FGBJ

FILEECTY

PLOTTED: 27JAN95-08:20:40

PROJECT NO.	SHEET NO
5896	C-26

BX1-34

DISK#DRAW: C25000.DADD.FG | SF:NOMPOT.FGBJ

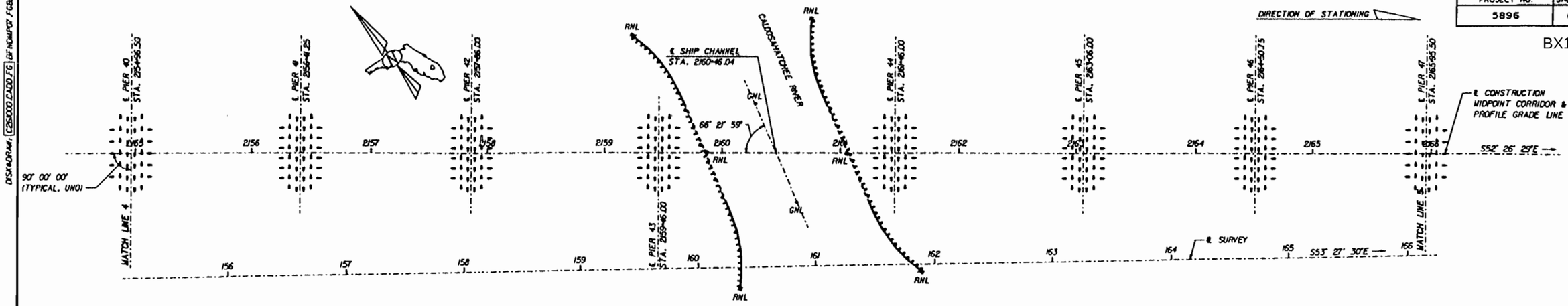

PLAN

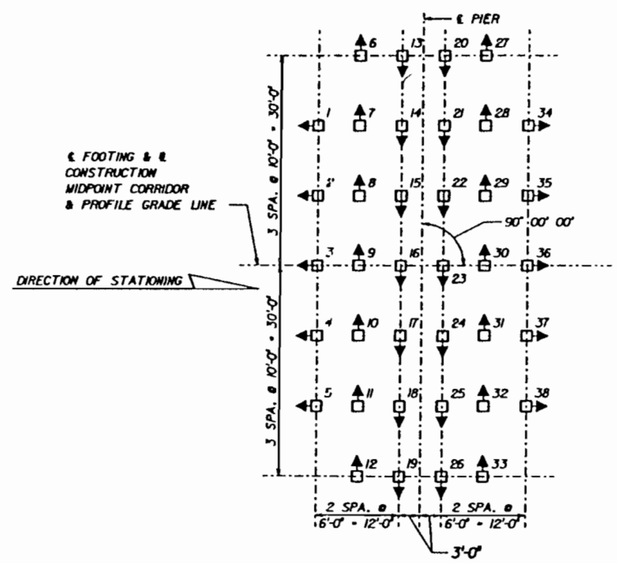

PLAN - PIERS 37 THRU 40 & 47 THRU 50

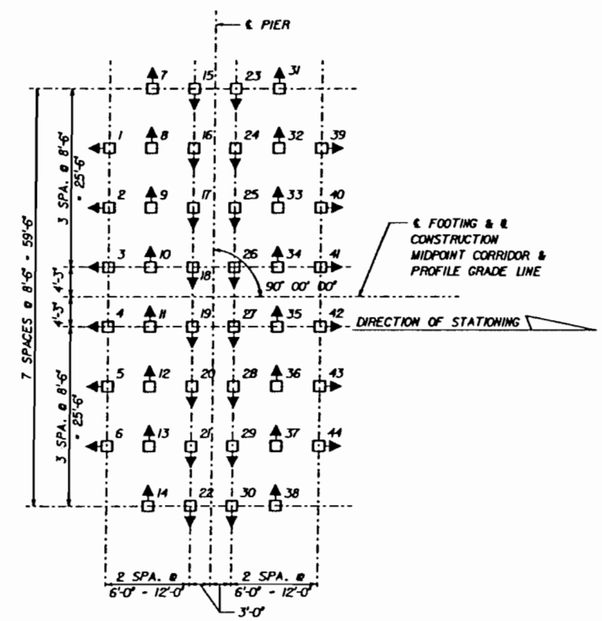

PLAN - PIERS 41 - 46

3/3/95

WORK THIS SHEET WITH SHEETS C-21 THRU C-25, C-27 & C-28.

REVISIONS											
DATE	BY	DESCRIPTION	DATE	BY	DESCRIPTION	DATE	BY	DESCRIPTION	DATE	BY	DESCRIPTION

	NAME	DATE
DR. BY	BDW	6/93
CHK. BY	REJ	1/94
SUPV.	REJ	1/94

Greiner Greiner, Inc. Tampa, Florida

Engineers, Architects and Planners

BOARD OF COUNTY COMMISSIONERS
LEE COUNTY, FLORIDA
DEPARTMENT OF TRANSPORTATION

MIDPOINT BRIDGE
FOUNDATION LAYOUT (5)

FRLEECTY

PLOTTED: 27JAN95-08.22.30

PROJECT NO.	SHEET NO.
5896	C-27

BX1-35

DISK#DRAW: C:\5600D\DJ0D.FG | GF#DJ0D.FG3J

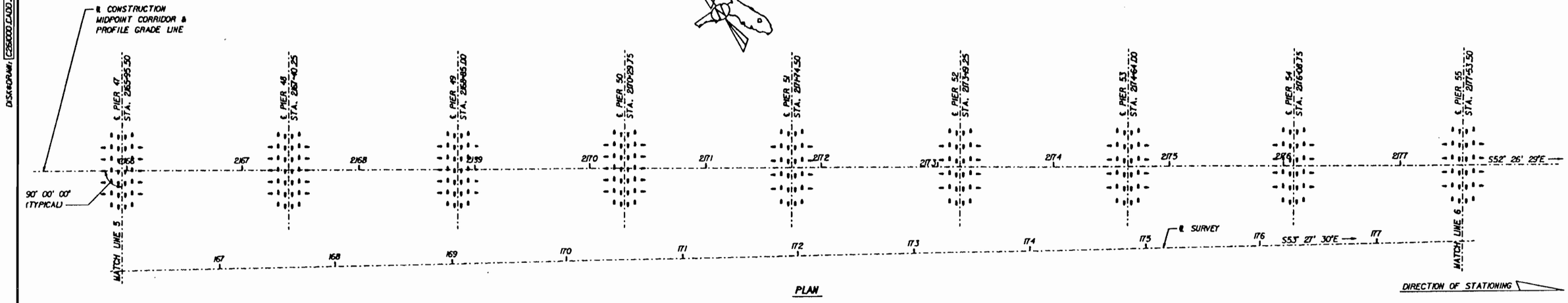

PLAN

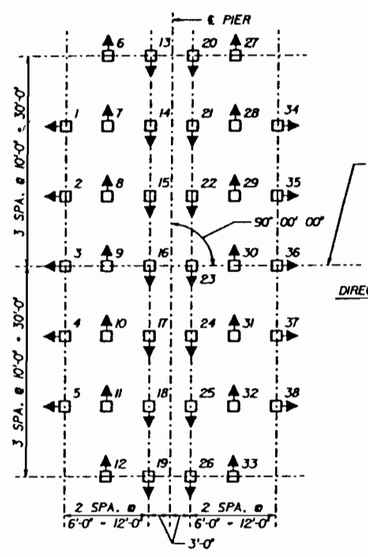

PLAN - PIERS 37 THRU 40 & 47 THRU 50

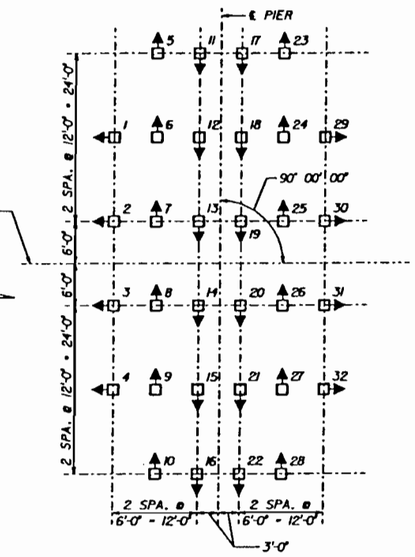

PLAN - PIERS 32 THRU 36 & 51 THRU 55

3/3/95

WORK THIS SHEET WITH SHEETS C-21 THRU C-26 & C-28.

REVISIONS											
DATE	BY	DESCRIPTION	DATE	BY	DESCRIPTION	DATE	BY	DESCRIPTION	DATE	BY	DESCRIPTION

	NAME	DATE
DR. BY	BDW	6/93
CHK. BY	REJ	1/94
SUPV.	REJ	1/94

Greiner Engineering, Inc. Tampa, Florida

Engineers, Architects and Planners

BOARD OF COUNTY COMMISSIONERS
LEE COUNTY, FLORIDA
DEPARTMENT OF TRANSPORTATION

MIDPOINT BRIDGE
FOUNDATION LAYOUT (6)

FRLEECTY

PLOTTED: 27JAN95-08:26:00

PROJECT NO.	SHEET NO.
5896	C-28

BX1-36

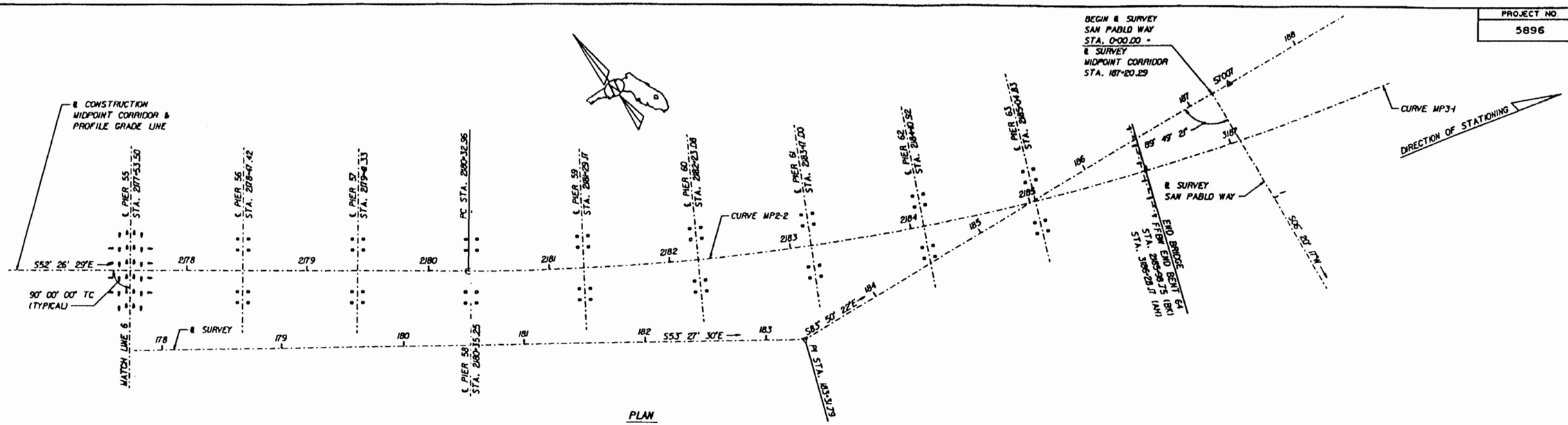

PLAN

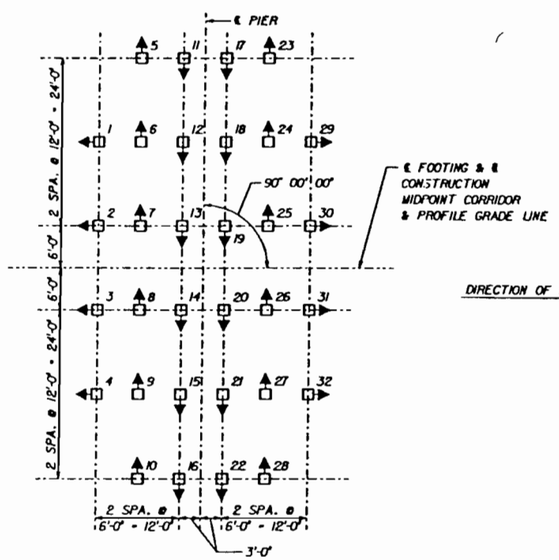

PLAN - PIERS 32 THRU 36 & 51 THRU 55

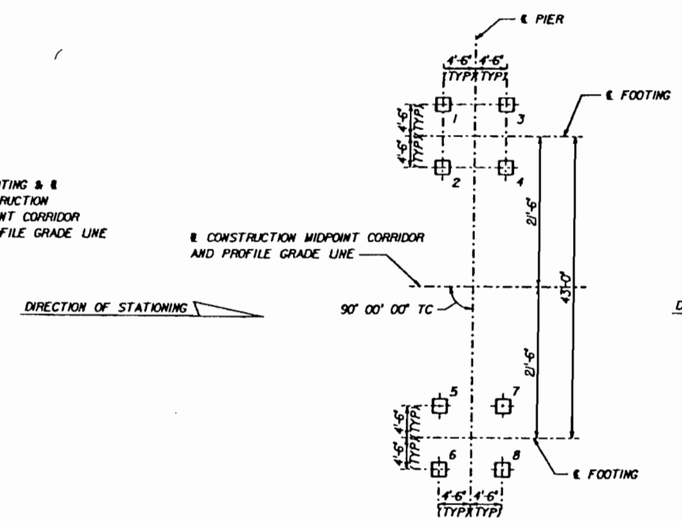

PLAN - PIERS 2 THRU 31 AND PIERS 56 THRU 63

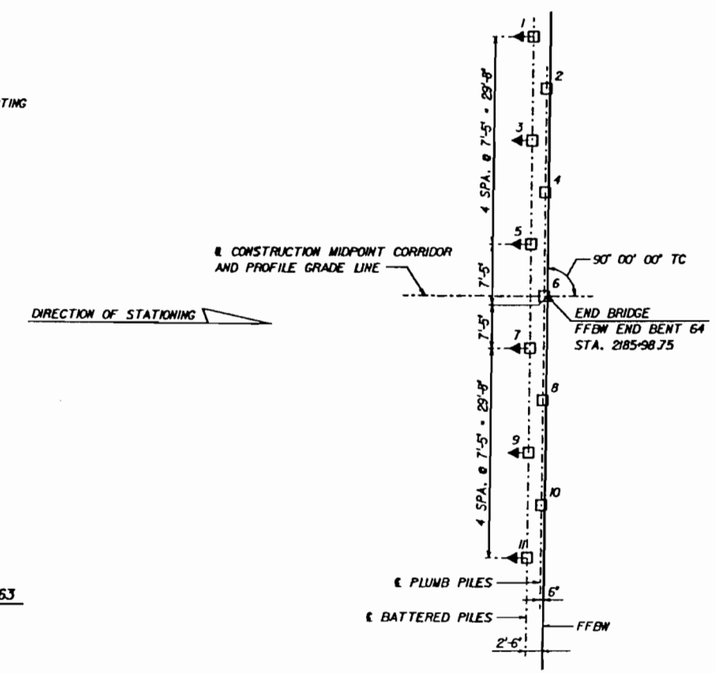

PLAN - END BENT 64

3/3/95

WORK THIS SHEET WITH SHEETS C-21 THRU C-27.

REVISIONS											
DATE	BY	DESCRIPTION	DATE	BY	DESCRIPTION	DATE	BY	DESCRIPTION	DATE	BY	DESCRIPTION

	NAME	DATE
DR. BY	BDW	6/93
CHK. BY	REJ	1/94
SUPV.	REJ	1/94

Greiner Greiner, Inc. Tampa, Florida

Engineers, Architects and Planners

BOARD OF COUNTY COMMISSIONERS
LEE COUNTY, FLORIDA
DEPARTMENT OF TRANSPORTATION

MIDPOINT BRIDGE
FOUNDATION LAYOUT (7)

DISK#DRAW: C:\5600\CADD\FG\ BF NOW/POD FGBJ

FILECITY

PLOTTED: 27 JANDE 08:28:30

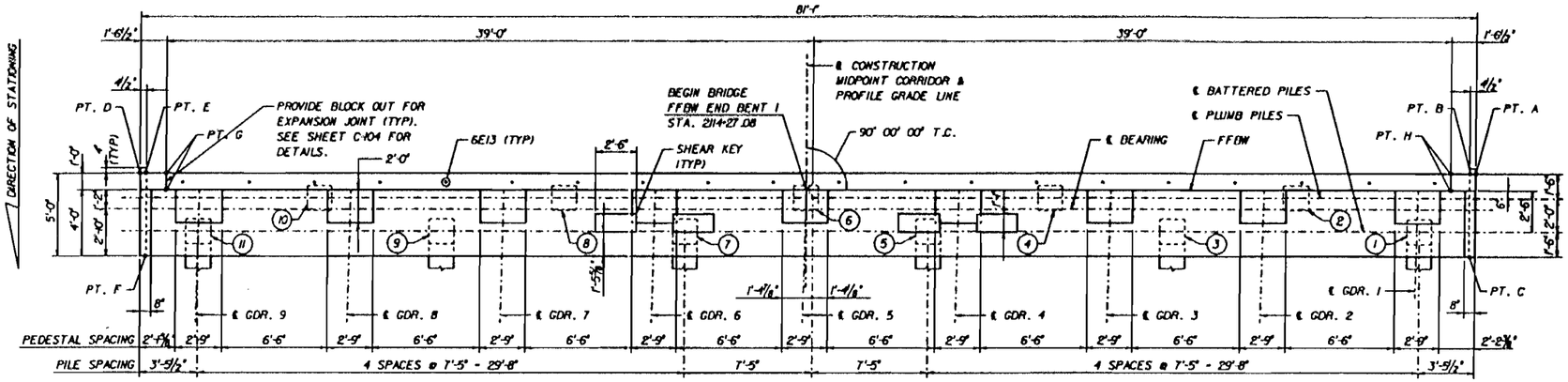

PLAN

BEARING PEDESTAL POINT ELEVATIONS

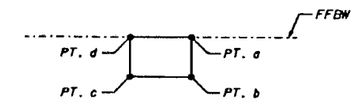

SPAN	GIRDER	ELEVATION POINTS			
		PT. a	PT. b	PT. c	PT. d
END BENT 1	1	17.482	17.482	17.482	17.482
	2	16.951	16.951	16.951	16.951
	3	16.407	16.407	16.407	16.407
	4	15.869	15.869	15.869	15.869
	5	15.322	15.322	15.322	15.322
	6	14.807	14.807	14.807	14.807
	7	14.270	14.270	14.270	14.270
	8	13.733	13.733	13.733	13.733
	9	13.246	13.246	13.246	13.246

ESTIMATED QUANTITIES

ITEM		UNIT	QUANTITY END BENT 1
CLASS IV CONCRETE (SUBSTRUCTURE)	PEDESTALS	CU. YD.	0.82
	SHEAR KEYS		1.39
	CAP		44.21
	WALLS		16.06
	TOTAL		62.48
REINFORCING STEEL (SUBSTRUCTURE)		LBS.	8992
PRESTRESSED CONCRETE PILES (18" SQUARE)*		LIN. FT.	968

* DOES NOT INCLUDE TEST PILE QUANTITIES.

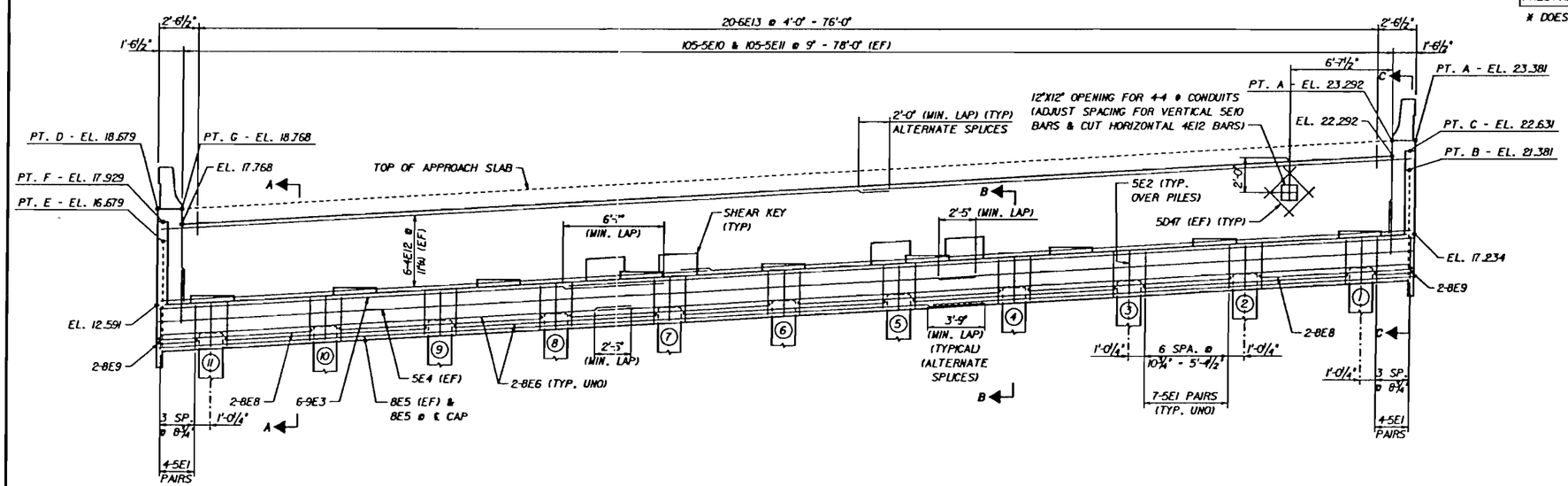

ELEVATION

NOTES

1. FOR GENERAL NOTES, SEE SHEETS C-1 & C-2.
2. ALL REINFORCING STEEL SHALL HAVE 3" CLEAR COVER, UNLESS NOTED OTHERWISE.

WORK THIS SHEET WITH SHEET C-31.

PILE CUTOFF ELEVATIONS

PILE NO.	1	2	3	4	5	6	7	8	9	10	11
ELEVATION	15.1	14.6	14.2	13.8	13.3	12.9	12.5	12.0	11.6	11.2	10.8

3/3/95

REVISIONS

DATE	BY	DESCRIPTION	DATE	BY	DESCRIPTION	DATE	BY	DESCRIPTION	DATE	BY	DESCRIPTION

	NAME	DATE
DR. BY	KAC	5/93
CHK. BY	GCG	7/94
SUPV.	REJ	7/94

Greiner Engineers, Inc. Tampa, Florida — Engineers, Architects and Planners

BOARD OF COUNTY COMMISSIONERS
LEE COUNTY, FLORIDA
DEPARTMENT OF TRANSPORTATION

MIDPOINT BRIDGE
END BENT 1

DISK:DRAW: C:\BC000\CADD\FG BA8TMPO.FG5A
FRLEECTY

PROJECT NO	SHEET NO.
5896	C-30

BX1-38

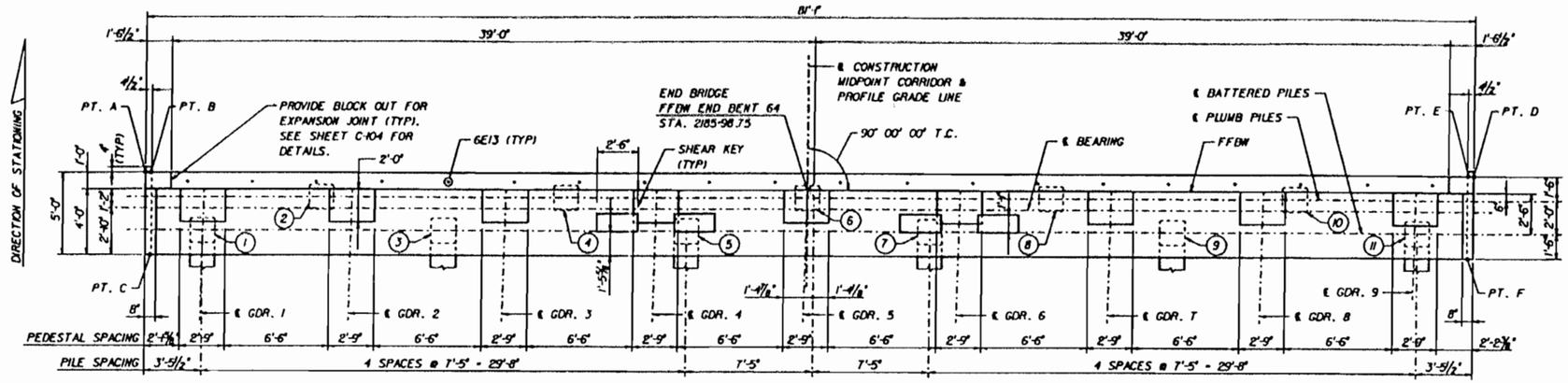

BEARING PEDESTAL POINT ELEVATIONS

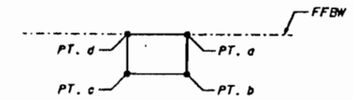

SPAN	GIRDER	ELEVATION POINTS			
		PT. a	PT. b	PT. c	PT. d
END BENT 64	1	12.919	12.926	12.926	12.920
	2	13.406	13.412	13.413	13.407
	3	13.944	13.950	13.950	13.944
	4	14.481	14.487	14.487	14.481
	5	14.996	15.002	15.002	14.996
	6	15.543	15.549	15.549	15.543
	7	16.080	16.086	16.086	16.080
	8	16.625	16.631	16.631	16.625
	9	17.156	17.162	17.162	17.156

ESTIMATED QUANTITIES

ITEM		UNIT	QUANTITY END BENT 64
CLASS IV CONCRETE (SUBSTRUCTURE)	PEDESTALS	CU. YD.	0.82
	SHEAR KEYS		1.39
	CAP		44.21
	WALLS		16.06
	TOTAL		62.48
REINFORCING STEEL (SUBSTRUCTURE)		LBS.	8992
PRESTRESSED CONCRETE PILES (18" SQUARE)*		LIN. FT.	967

* DOES NOT INCLUDE TEST PILE QUANTITIES.

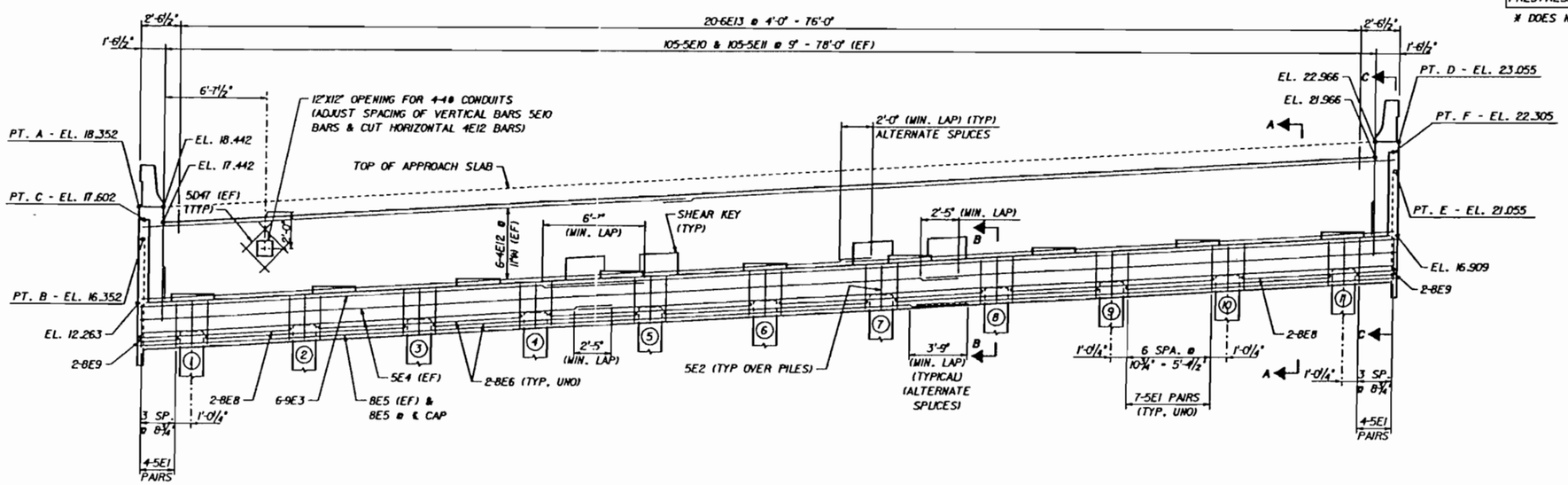

NOTES

1. FOR GENERAL NOTES, SEE SHEETS C-1 & C-2.
2. ALL REINFORCING STEEL SHALL HAVE 3" CLEAR COVER, UNLESS NOTED OTHERWISE.

WORK THIS SHEET WITH SHEET C-31.

PILE CUTOFF ELEVATIONS

PILE NO.	1	2	3	4	5	6	7	8	9	10	11
ELEVATION	10.4	10.9	11.3	11.7	12.2	12.6	13.0	13.5	13.9	14.3	14.7

REVISIONS											
DATE	BY	DESCRIPTION	DATE	BY	DESCRIPTION	DATE	BY	DESCRIPTION	DATE	BY	DESCRIPTION

	NAME	DATE
DR. BY	KAC	5/93
CHK. BY	GCG	7/94
SUPV.	REJ	7/94

Greiner Engineers, Inc. Tampa, Florida

Engineers, Architects and Planners

BOARD OF COUNTY COMMISSIONERS
LEE COUNTY, FLORIDA
DEPARTMENT OF TRANSPORTATION

MIDPOINT BRIDGE
END BENT 64

DISK#DRAWL C:\5600\CADD\FG BABTWP02.FCBW

FRLECCTY

PROJECT NO	SHEET NO
5896	C-31

BX1-39

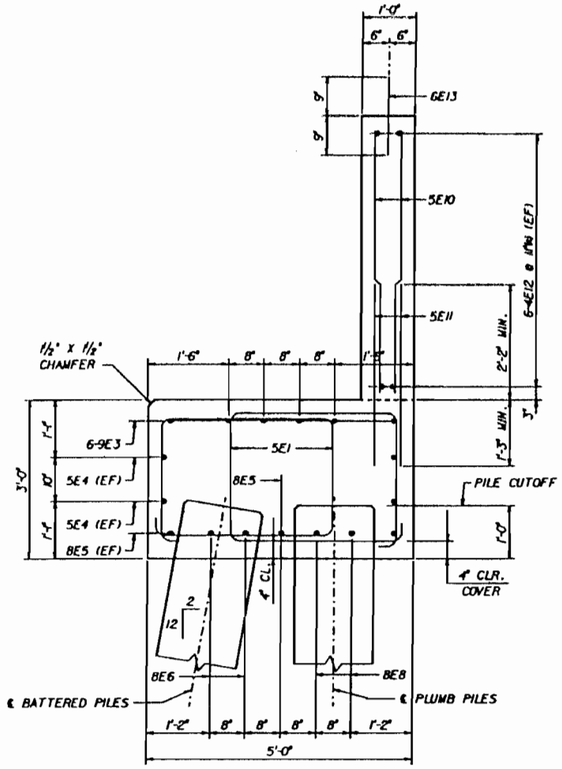

SECTION A-A

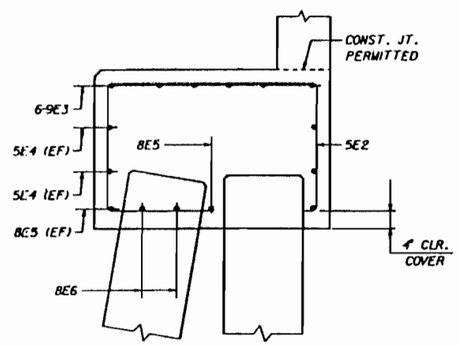

SECTION B-B

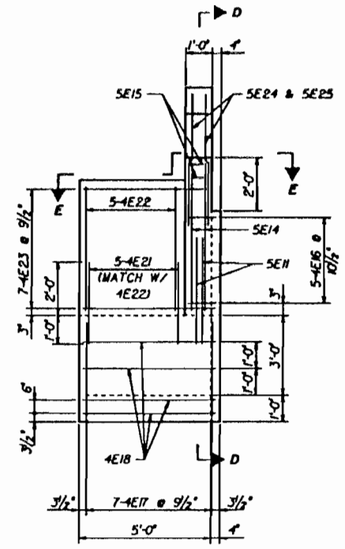

SECTION C-C

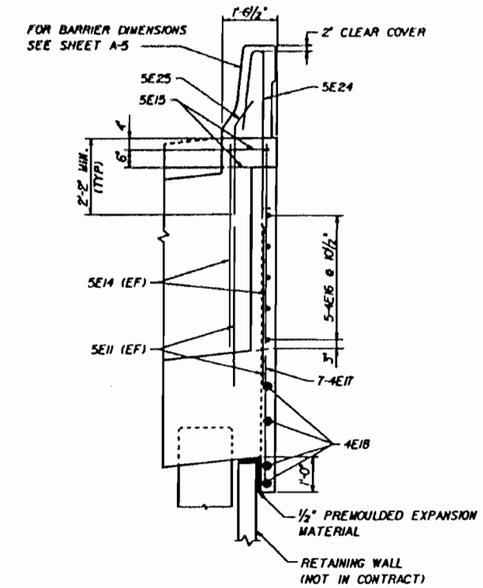

SECTION D-D

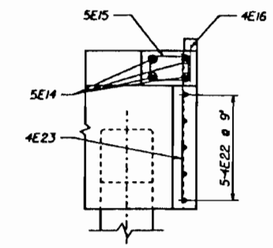

SECTION E-E

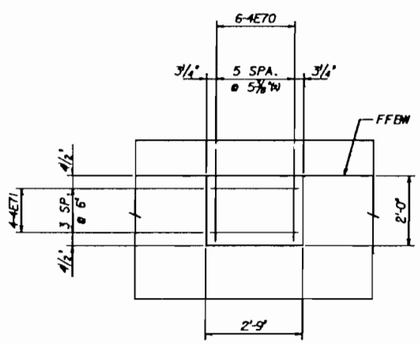

PLAN - PEDESTAL REINFORCING

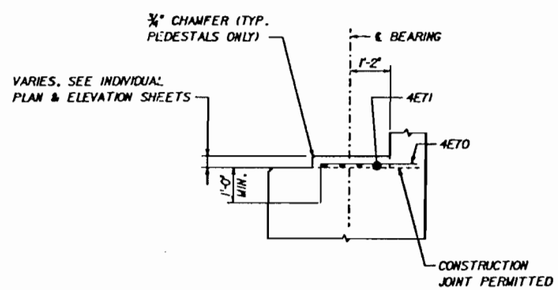

TYPICAL SECTION THRU PEDESTAL

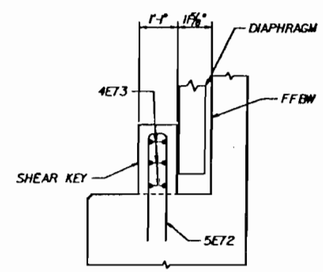

SECTION F-F

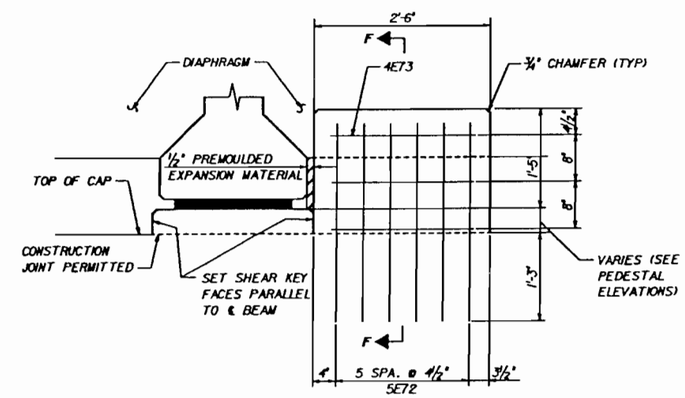

SHEAR KEY DETAILS

NOTES

1. FOR GENERAL NOTES, SEE SHEETS C-1 & C-2.
2. ALL REINFORCING STEEL SHALL HAVE 3" CLEAR COVER, UNLESS NOTED OTHERWISE.

WORK THIS SHEET WITH SHEETS C-29 & C-30.

7/3/93

REVISIONS											
DATE	BY	DESCRIPTION	DATE	BY	DESCRIPTION	DATE	BY	DESCRIPTION	DATE	BY	DESCRIPTION

	NAME	DATE
DR. BY	KAC	6/93
CHK. BY	GCG	6/93
SUPV.	REJ	6/93

Greiner Greiner, Inc. Tampa, Florida — Engineers, Architects and Planners

BOARD OF COUNTY COMMISSIONERS
LEE COUNTY, FLORIDA
DEPARTMENT OF TRANSPORTATION

MIDPOINT BRIDGE
END BENT DETAILS

DSK#&DRAW: 256000 CADD FG | BABT WP03 FGBJ

FRLECCTY

PROJECT NO	SHEET NO
5896	C-32

BX1-40

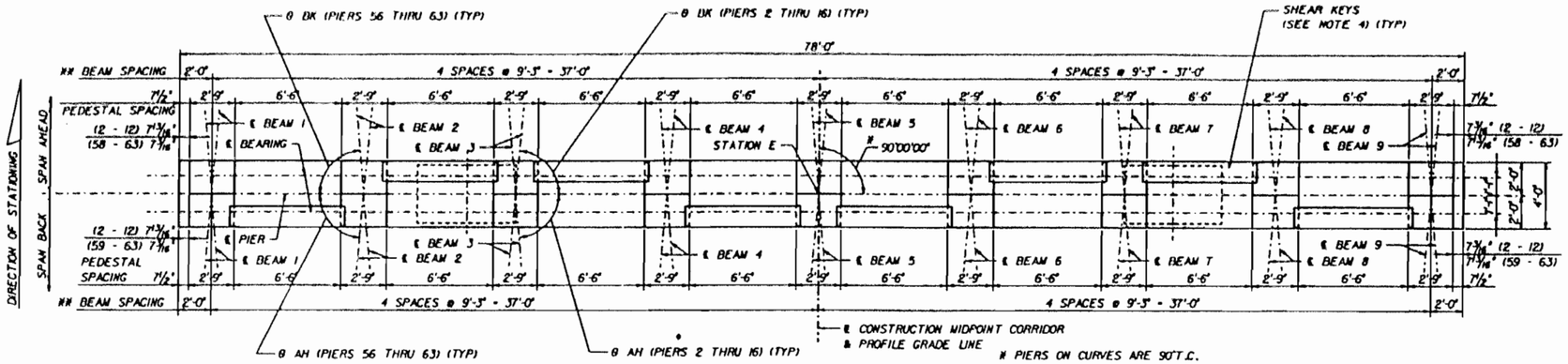

PLAN

FIXED PIERS 2,6,10,14,57,60 & 63
EXPANSION PIERS 3,4,5,7,8,9,11,12,13,15,16,56,58,59,61,62
PIERS 13 - 16 & 56 - 58 AS SHOWN (OTHERS AS NOTED)

PIER	ELEVATION A	ELEVATION B	DIMENSION C	DIMENSION D	STATION E	STIRRUPS F	STIRRUPS G
2 - 10	17.144	12.678	5'-5 1/4"	2'-11 3/4"	SEE TABLE BELOW	12	6
11	17.168	12.627	5'-5 7/8"	2'-11 7/8"	2123+66.25	12	6
12	16.720	12.827	5'-1 3/4"	3'-0"	2124+60.17	11	6
13	15.846	13.268	4'-6 3/4"	3'-1 3/4"	2125+54.08	10	6
14	14.968	13.534	3'-11 7/8"	3'-2 7/8"	2126+48.00	8	6
15	14.090	13.279	3'-2 1/2"	2'-9 1/8"	2127+41.92	6	5
16	13.089	13.005	2'-4 1/2"	2'-3 7/8"	2128+35.83	4	4
56	16.153	14.988	5'-2 1/4"	4'-6 3/8"	2178+47.42	11	10
57	16.092	14.041	4'-11 1/8"	3'-9 5/8"	2179+41.33	11	8
58	16.540	13.238	5'-1 1/4"	3'-3 3/8"	2180+35.25	11	6
59	17.110	12.642	5'-4 7/8"	2'-11 3/8"	2181+29.17	12	6
60 - 62	17.114	12.648	5'-5"	2'-11 3/8"	SEE TABLE BELOW	12	6
63	17.093	12.628	7'-4 3/4"	4'-11 1/8"	2185+04.83	17	11

PIER	STATION E	PIER	STATION E
2	2115+21.00	8	2120+84.50
3	2116+14.92	9	2121+78.42
4	2117+08.83	10	2122+72.33
5	2118+02.75	60	2182+23.08
6	2118+96.67	61	2183+17.00
7	2119+90.58	62	2184+10.92

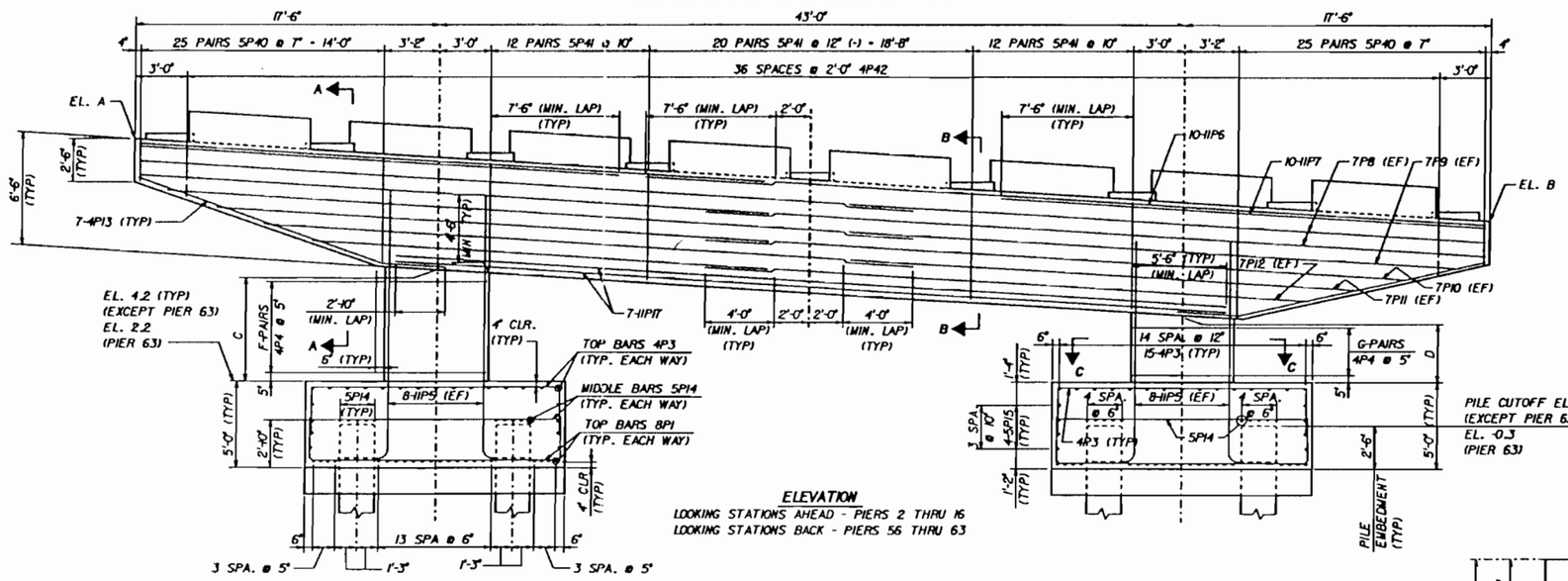

ELEVATION

LOOKING STATIONS AHEAD - PIERS 2 THRU 16
LOOKING STATIONS BACK - PIERS 56 THRU 63

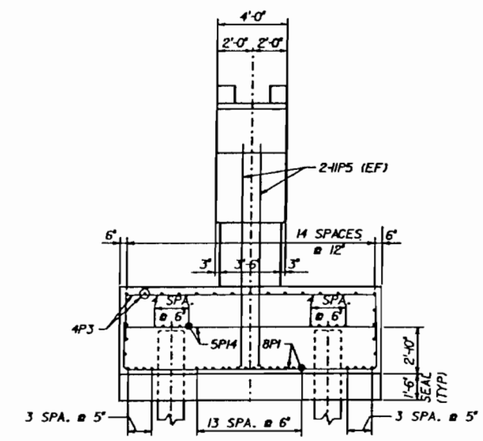

END ELEVATION

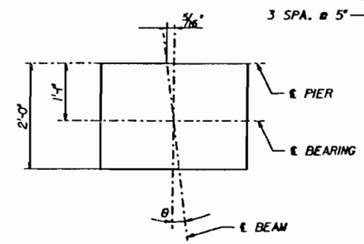

PEDESTAL PLAN

(TYPICAL)

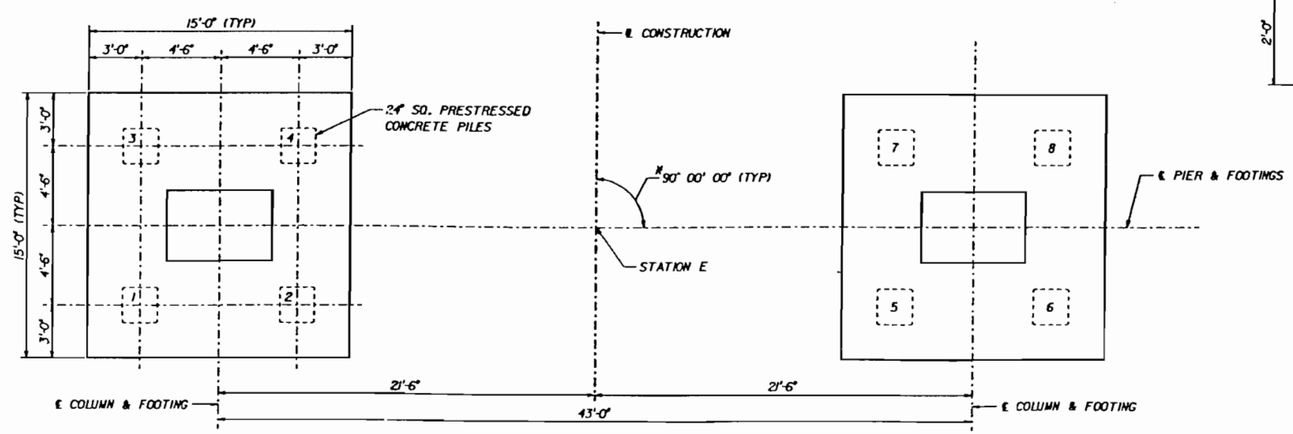

PLAN OF FOOTINGS

NOTES

1. FOR GENERAL NOTES, SEE SHEETS C-1, C-2 & C-3.
2. ALL REINFORCING STEEL SHALL HAVE 3" CLEAR COVER, UNLESS NOTED OTHERWISE.
3. FOR BEARING PEDESTAL POINT ELEVATIONS, SEE SHEETS C-43 & C-46
4. SHEAR KEYS TO BE LOCATED AS SHOWN IN ALL BAYS OF THE FIXED PIERS AND ONLY IN BAYS 1,2,7 & 8 OF THE EXPANSION PIERS.
5. LAP SPLICES FOR BARS 11P6 AND 7P8 THRU 7P12 SHALL ALTERNATE ABOUT THE ℄ CONSTRUCTION.
6. SEAL IS NOT REQUIRED FOR PIER 63.

WORK THIS SHEET WITH SHEET C-34.

3/3/95

REVISIONS

DATE	BY	DESCRIPTION	DATE	BY	DESCRIPTION	DATE	BY	DESCRIPTION	DATE	BY	DESCRIPTION

	NAME	DATE
DR. BY	SG	4/94
CHK. BY	MH	7/94
SUPV.	REJ	4/94

Greiner Greiner, Inc. Tampa, Florida

Engineers, Architects and Planners

BOARD OF COUNTY COMMISSIONERS
LEE COUNTY, FLORIDA
DEPARTMENT OF TRANSPORTATION

MIDPOINT BRIDGE
PIERS 2 THRU 16 & 56 THRU 63

PLOTTED: 27JAN95-08:50:40

PROJECT NO.	SHEET NO
5896	C-33

BX1-41

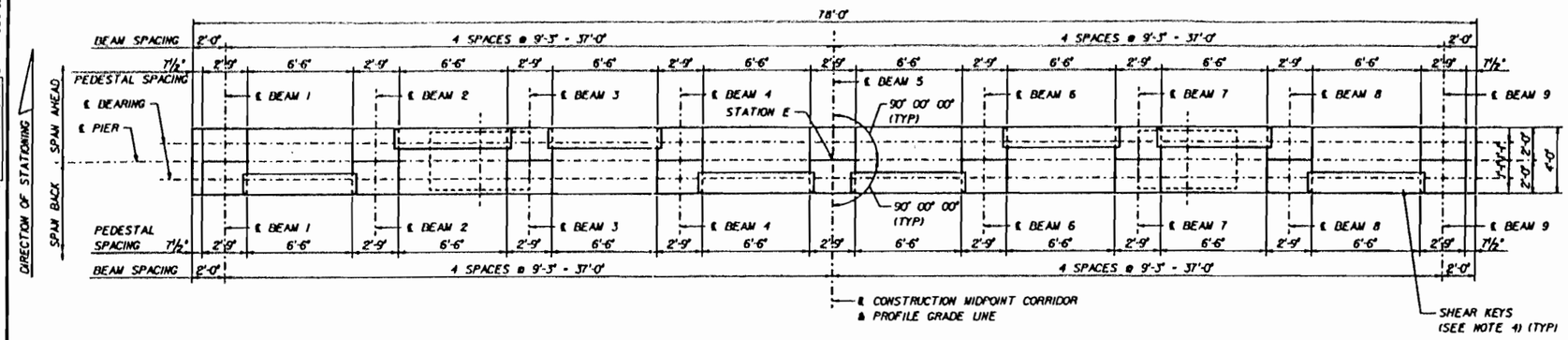

PLAN

FIXED PIERS 18,22,26 & 30
EXPANSION PIERS 17,19,20,21,23,24, 25,27,28,29, & 31

	ELEVATION		DIMENSION		STATION	STIRRUPS
PIER	A	B	C	D	E	F
17	12.712	12.792	2'-0 3/8"	2'-0 7/8"	2129+29.75	4
18 - 27	12.822	12.822	2'-1 1/2"	2'-1 1/2"	SEE TABLE BELOW	4
28	12.776	12.776	2'-0 7/8"	2'-0 7/8"	2139+62.83	4
29	12.882	12.882	2'-2 1/4"	2'-2 1/4"	2140+56.75	5
30	13.409	13.409	2'-8 1/2"	2'-8 1/2"	2141+50.67	6
31	14.379	14.379	3'-8 1/8"	3'-8 1/8"	2142+44.58	8

PIER	STATION E	PIER	STATION E
18	2130+23.67	23	2134+93.25
19	2131+17.58	24	2135+87.17
20	2132+11.50	25	2136+81.08
21	2133+05.42	26	2137+75.00
22	2133+99.33	27	2138+68.92

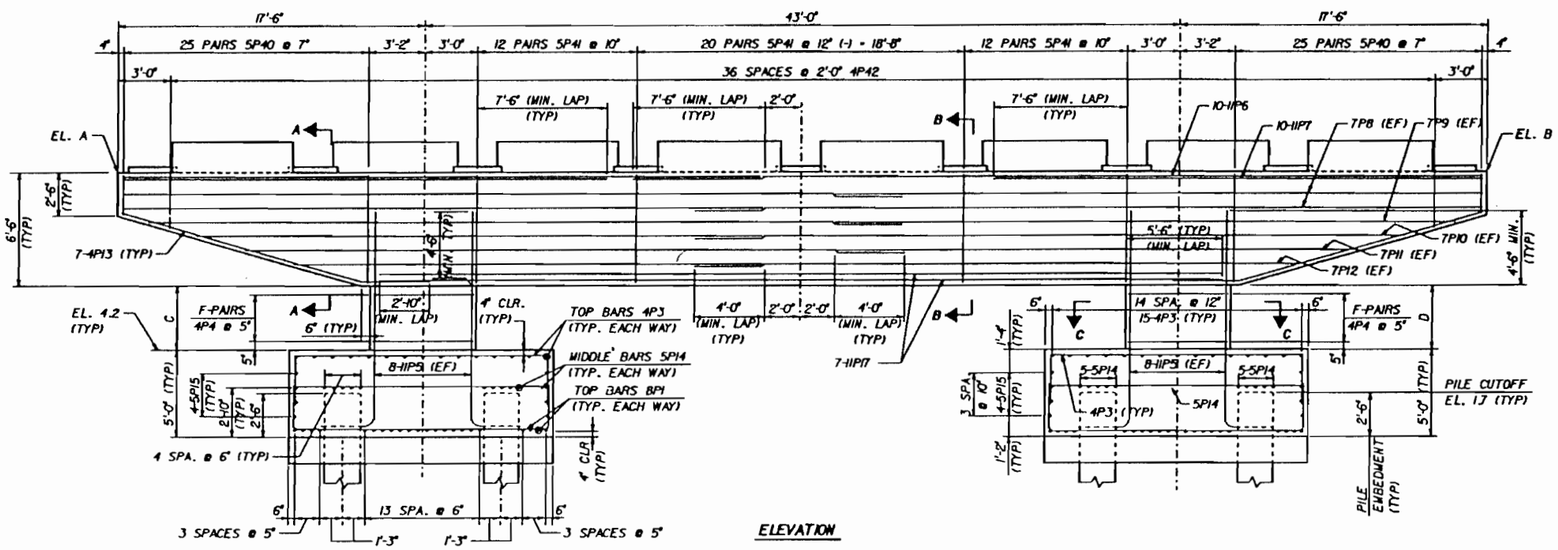

ELEVATION

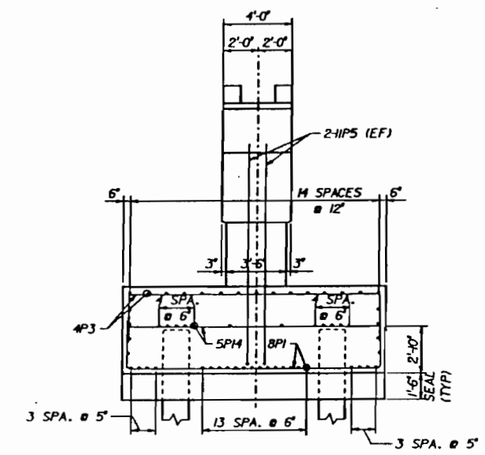

END ELEVATION

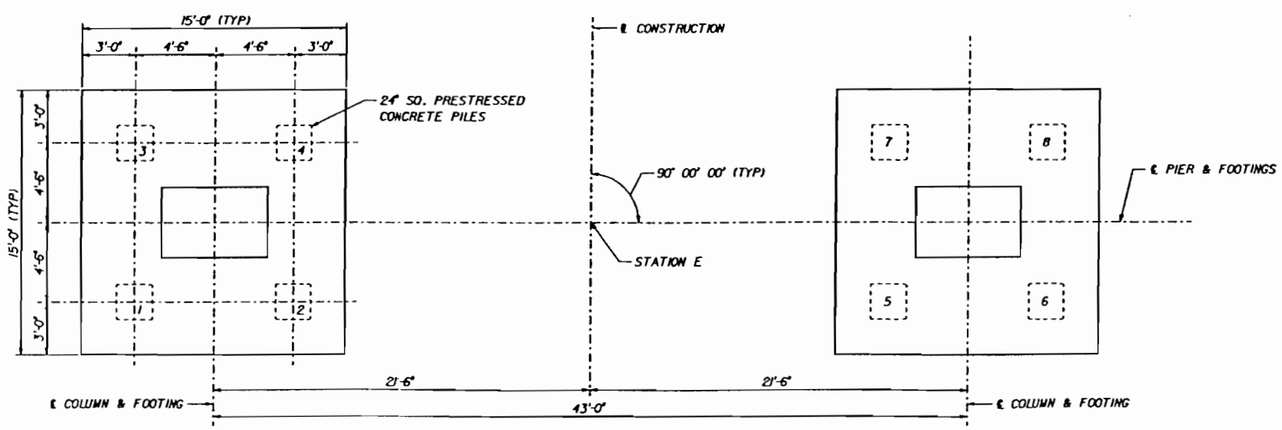

PLAN OF FOOTINGS

NOTES

1. FOR GENERAL NOTES, SEE SHEETS C-1, C-2 & C-3.
2. ALL REINFORCING STEEL SHALL HAVE 3" CLEAR COVER, UNLESS NOTED OTHERWISE.
3. FOR BEARING PEDESTAL POINT ELEVATIONS, SEE SHEETS C-43 & C-44.
4. SHEAR KEYS TO BE LOCATED AS SHOWN IN ALL BAYS OF THE FIXED PIERS AND ONLY IN BAYS 1,2,7 & 8 OF THE EXPANSION PIERS.
5. LAP SPLICES FOR BARS 11P6 AND 7P8 THRU 7P12 SHALL ALTERNATE ABOUT THE ℄ CONSTRUCTION.

3/3/94 WORK THIS SHEET WITH SHEET C-34

REVISIONS

DATE	BY	DESCRIPTION	DATE	BY	DESCRIPTION	DATE	BY	DESCRIPTION	DATE	BY	DESCRIPTION

	NAME	DATE
DR. BY	BDW	3/94
CHK. BY	MH	7/94
SUPV.	REJ	3/94

Greiner Greiner, Inc. Tampa, Florida

Engineers, Architects and Planners

BOARD OF COUNTY COMMISSIONERS
LEE COUNTY, FLORIDA
DEPARTMENT OF TRANSPORTATION

MIDPOINT BRIDGE
PIERS 17 THRU 31

FRLEECTY

PLOTTED: 27JAN95-08:24:20

PROJECT NO	SHEET NO
5896	C-34

BX1-42

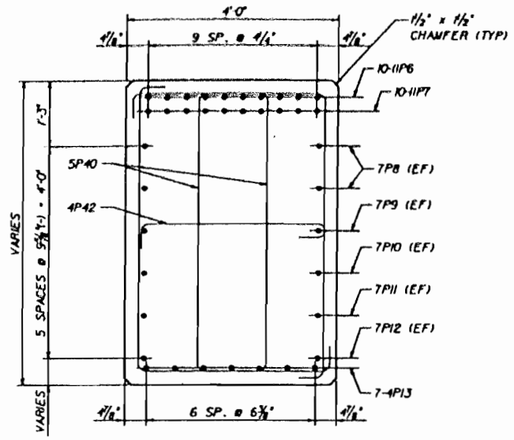

SECTION A-A
(CONCRETE PEDESTAL NOT SHOWN)

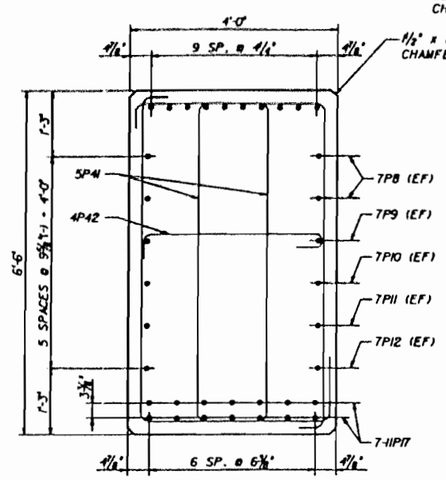

SECTION B-B
(CONCRETE PEDESTAL NOT SHOWN)

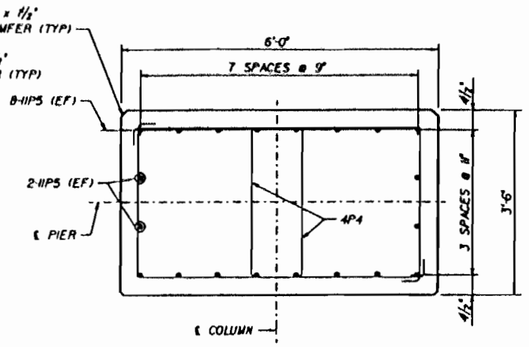

SECTION C-C

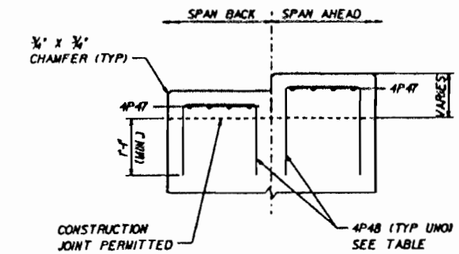

ELEVATION - PEDESTAL REINFORCING
NOTE: TOP OF PEDESTAL IS LEVEL FOR PIERS 2-10, 15, 18-27, 30, 31, 60 AND 61.

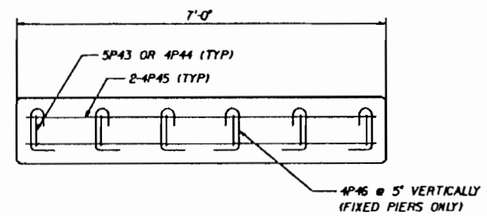

PLAN - SHEAR KEYS

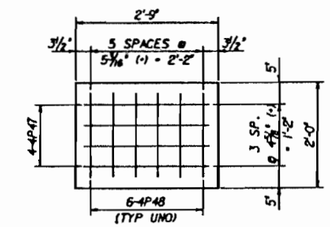

PLAN - PEDESTAL REINFORCING

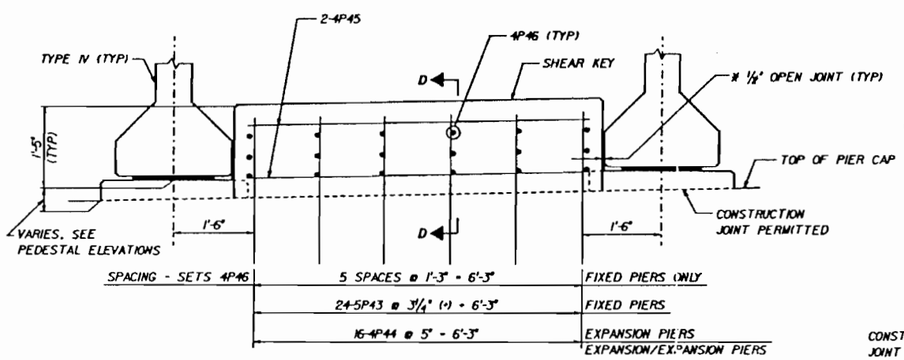

* NOTE: FOR BEAMS NOT 90° TO ℄ OF PIER (SEE FRAMING PLANS), SET SHEAR KEY ENDS PARALLEL TO ℄ BEAMS.

ELEVATION

SHEAR KEY DETAILS

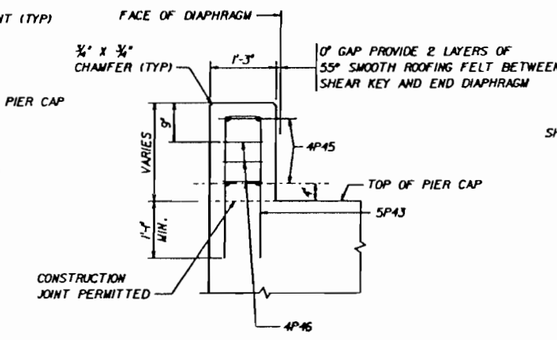

SECTION D-D
(FIXED PIERS)

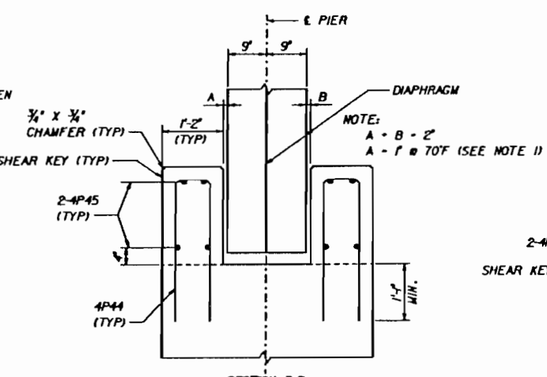

SECTION D-D
(EXPANSION PIERS)

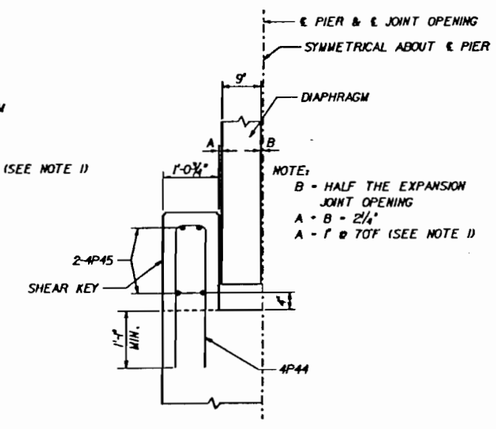

SECTION D-D
(EXPANSION/EXPANSION PIERS)

ESTIMATED QUANTITIES

ITEM		UNIT	QUANTITY																			
			PIER 2	PIER 3	PIER 4	PIER 5	PIER 6	PIER 7	PIER 8	PIER 9	PIER 10	PIER 11	PIER 12	PIER 13	PIER 14	PIER 15	PIER 16	PIER 17	PIER 18	PIER 19	PIER 20
CLASS IV CONCRETE (SUBSTRUCTURE)	CAP *	CU. YD.	73.12	70.61	70.42	70.61	73.12	70.61	70.42	70.61	73.12	70.84	70.60	70.50	73.03	71.01	71.49	71.81	74.67	71.59	71.38
	COLUMNS		6.55	6.55	6.55	6.55	6.55	6.55	6.55	6.55	6.55	6.53	6.34	6.0	5.53	4.64	3.65	3.19	3.31	3.31	3.31
	TOTAL		79.67	77.16	76.97	77.16	79.67	77.16	76.97	77.16	79.67	76.87	76.94	76.50	78.56	75.65	75.14	75.00	77.98	74.90	74.69
CLASS IV CONCR. (SUBSTRUCTURE-MASS)	FOOTINGS		80.37	80.37	80.37	80.37	80.37	80.37	80.37	80.37	80.37	80.37	80.37	80.37	80.37	80.37	80.37	80.37	80.37	80.37	80.37
CLASS III CONCRETE	SEAL		23.22	23.22	23.22	23.22	23.22	23.22	23.22	23.22	23.22	23.22	23.22	23.22	23.22	23.22	23.22	23.22	23.22	23.22	23.22
REINFORCING STEEL (SUBSTRUCTURE)		LBS.	28501	27259	27259	27259	28501	27259	27259	27259	28501	27259	27206	27144	28288	26900	26807	26747	28216	26765	26765
PRESTRESSED CONCRETE PILES (24" SQUARE)**		LIN. FT.	670	766	670	766	670	766	670	766	670	766	670	766	670	766	670	726	635	726	635
ITEM		UNIT	PIER 21	PIER 22	PIER 23	PIER 24	PIER 25	PIER 26	PIER 27	PIER 28	PIER 29	PIER 30	PIER 31	PIER 56	PIER 57	PIER 58	PIER 59	PIER 60	PIER 61	PIER 62	PIER 63
CLASS IV CONCRETE (SUBSTRUCTURE)	CAP *	CU. YD.	71.59	74.67	71.59	71.38	71.59	74.67	71.59	71.50	71.62	74.77	71.71	70.75	72.99	70.38	70.65	73.12	70.42	70.63	73.17
	COLUMNS		3.31	3.31	3.31	3.31	3.31	3.31	3.31	3.23	3.40	4.21	5.72	7.58	6.79	6.45	6.50	6.51	6.51	6.51	9.58
	TOTAL		74.90	77.98	74.90	74.69	74.90	77.98	74.90	74.73	75.02	78.98	77.43	78.33	79.78	76.83	77.15	79.63	76.93	77.14	82.75
CLASS IV CONCR. (SUBSTRUCTURE-MASS)	FOOTINGS		80.37	80.37	80.37	80.37	80.37	80.37	80.37	80.37	80.37	80.37	80.37	80.37	80.37	80.37	80.37	80.37	80.37	80.37	80.37
CLASS III CONCRETE	SEAL		23.22	23.22	23.22	23.22	23.22	23.22	23.22	23.22	23.22	23.22	23.22	23.22	23.22	23.22	23.22	23.22	23.22	23.22	—
REINFORCING STEEL (SUBSTRUCTURE)		LBS.	26765	28216	26765	26765	26765	28216	26765	26747	26818	28411	27243	27518	28599	27252	27259	28501	27259	27259	29103
PRESTRESSED CONCRETE PILES (24" SQUARE) **		LIN. FT.	726	691	790	691	790	691	790	607	694	607	694	694	607	694	607	694	607	694	607

* PEDESTAL AND SHEAR KEYS QUANTITIES ARE INCLUDED IN CAP QUANTITIES
** DOES NOT INCLUDE TEST PILE QUANTITIES.

SHEAR KEY CLEARANCE

NOTE: 1. TEMPERATURE ADJUSTMENT PER 10°F = 0.23"

CORROSION INHIBITING CONCRETE ALTERNATE

IF THE OWNER ELECTS TO USE THIS ALTERNATE, ALL CAP AND COLUMN CONCRETE QUANTITIES SHOWN ON THIS SHEET SHALL RECEIVE CORROSION INHIBITING ADDITIVES.

3/3/95

WORK THIS SHEET WITH SHEETS C-32 & C-33

REVISIONS

DATE	BY	DESCRIPTION	DATE	BY	DESCRIPTION	DATE	BY	DESCRIPTION	DATE	BY	DESCRIPTION

	NAME	DATE
DR. BY	BDW	3/94
CHK. BY	WSO	7/94
SUPV.	BRH	3/94

Greiner
Greiner, Inc.
Tampa, Florida

Engineers, Architects and Planners

BOARD OF COUNTY COMMISSIONERS
LEE COUNTY, FLORIDA
DEPARTMENT OF TRANSPORTATION

MIDPOINT BRIDGE
PIER DETAILS
PIERS 2 THRU 31 & 56 THRU 63

FRLEECTY

PLOTTED: 27-JAN-95 08:27:40

PROJECT NO	SHEET NO
5896	C-35A

BX1-43

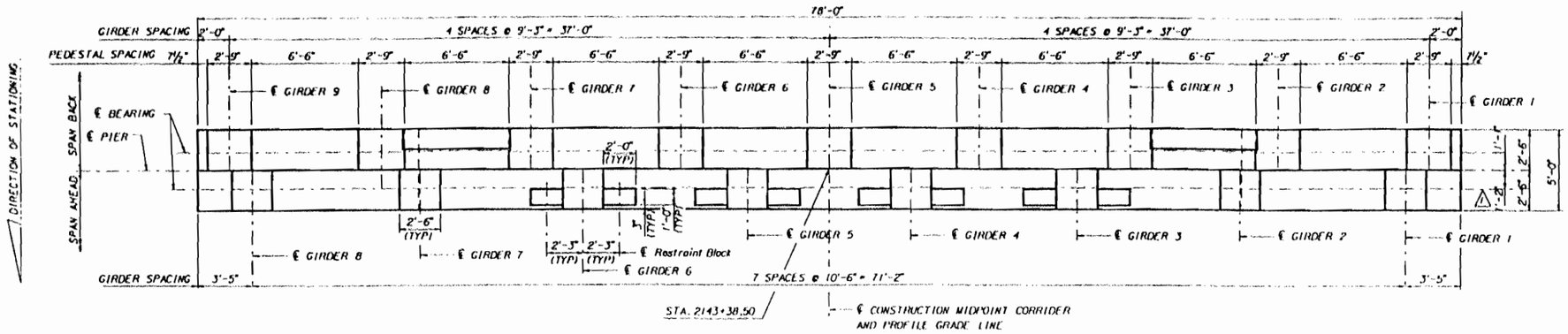

PLAN PIER 32

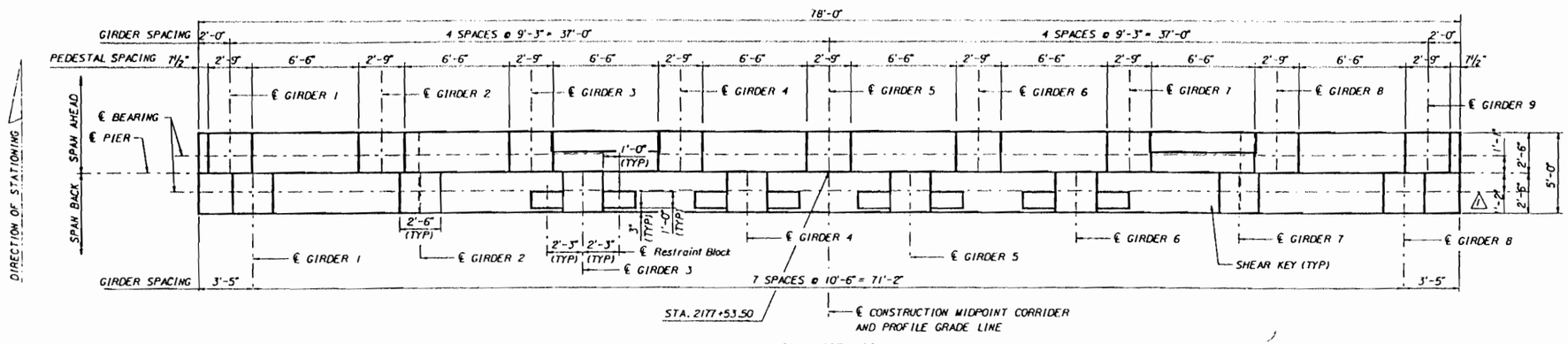

PLAN PIER 55

PIER	ELEVATION			
	A	B	C	D
32	15.834	15.834	13.867	13.867
55	16.208	16.770	14.244	14.541

NOTES

1. FOR GENERAL NOTES, SEE SHEET C-1A, C-2A & C-3A.
2. ALL REINFORCING STEEL SHALL HAVE 3" CLEAR COVER, UNLESS NOTED OTHERWISE.

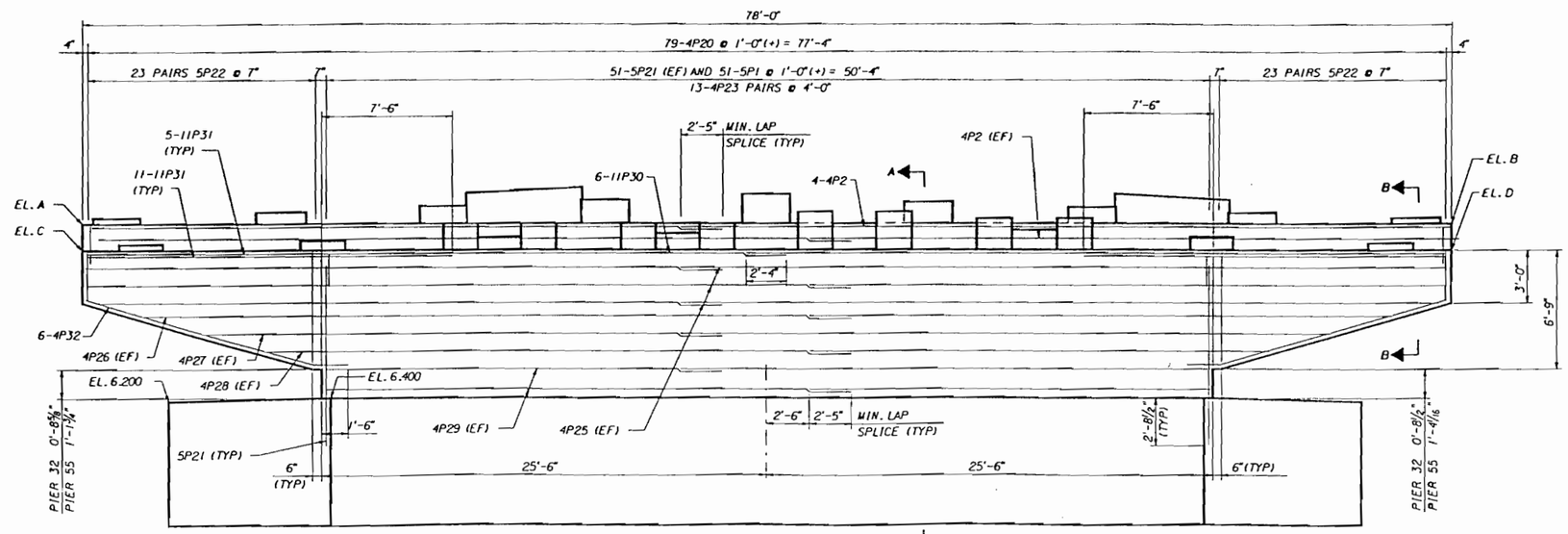

ELEVATION

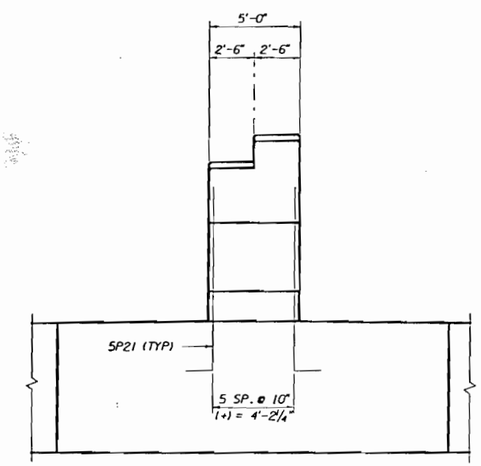

END ELEVATION

NOTE: SHEAR KEY DETAILS FOR 32 AHD & 55 BK ON SHEET C-42A.
SHEAR KEY DETAILS FOR 32 BK & 55 AHD ON SHEET C-34.

WORK THIS SHEET WITH SHEETS C-36A & C-47.

REVISIONS

DATE	BY	DESCRIPTION	DATE	BY	DESCRIPTION	DATE	BY	DESCRIPTION	DATE	BY
5/96	HDR	REVISED PEDESTAL ELEVATIONS AND LOCATIONS								

	NAME	DATE
DR. BY	HNG	3/94
CHK. BY	GCG	7/94
SUPV.	REJ	3/95

Greiner
Greiner, Inc.
Engineers, Architects and Planners

BOARD OF COUNTY COMMISSIONERS
LEE, COUNTY, FLORIDA

MIDPOINT BRIDGE

PROJECT NO	SHEET NO
5896	C-36A

BX1-44

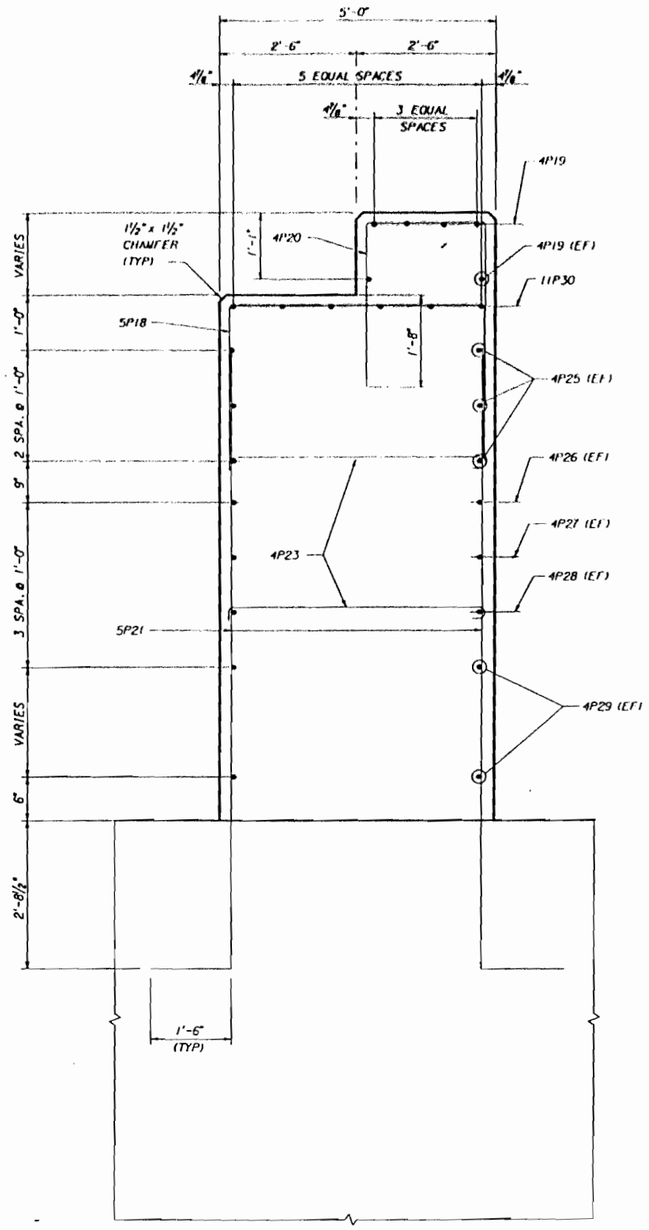

SECTION A-A
(CONCRETE PEDESTAL NOT SHOWN)

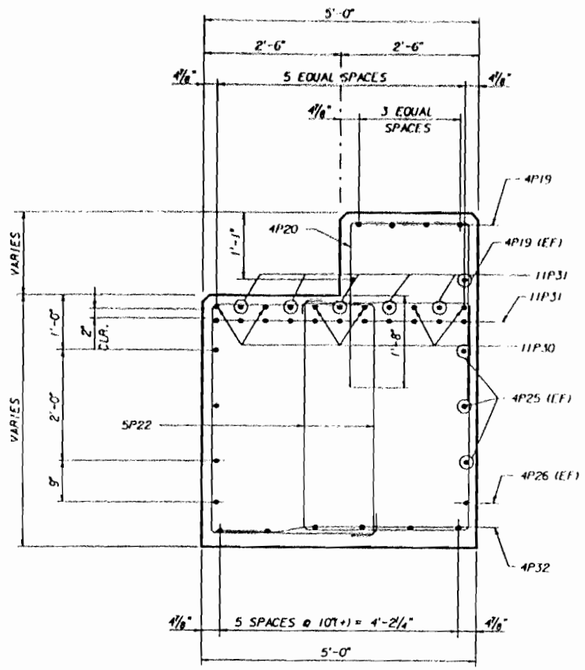

SECTION B-B
(CONCRETE PEDESTAL NOT SHOWN)

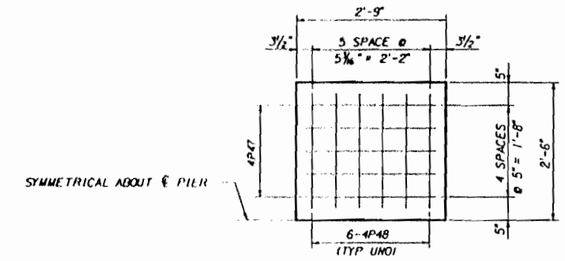

PLAN - PEDESTAL REINFORCING
(PIER 32 BK AND PIER 55 AHD)

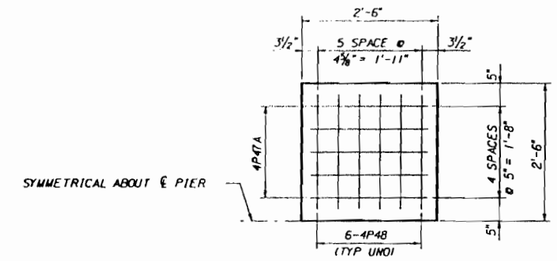

PLAN - PEDESTAL REINFORCING
(PIER 32 AHD AND PIER 55 BK)

ESTIMATED QUANTITIES				
ITEM		UNIT	QUANTITY	
			PIER 32	PIER 55
CLASS IV CONCRETE (SUBSTRUCTURE)	COLUMN	CU. YD.	6.70	11.70
	CAP *		107.23	108.18
	TOTAL		113.93	119.88
CLASS IV CONCR. (SUBSTRUCTURE-MASS)	FOOTING		615.83	615.83
CLASS III CONCRETE	SEAL		127.28	127.28
REINFORCING STEEL (SUBSTRUCTURE)		LBS	77736	77849
PRESTRESSED CONCRETE PILES (24" SQUARE) **		LIN. FT.	2818	2850

* PEDESTALS AND SHEAR KEYS QUANTITIES ARE INCLUDED IN CAP QUANTITIES.
** DOES NOT INCLUDE TESTPILE QUANTITIES.

CORROSION INHIBITING CONCRETE ALTERNATE
IF THE OWNER ELECTS TO USE THIS ALTERNATE, ALL COLUMN AND CAP CONCRETE QUANTITIES SHOWN ABOVE SHALL RECEIVE CORROSION INHIBITING ADDITIVES.

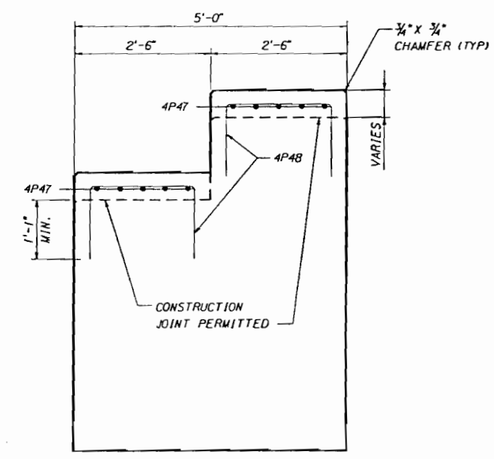

ELEVATON - PEDESTAL REINFORCING

NOTES

1. FOR GENERAL NOTES, SEE SHEET C-1A, C-2A & C-3A.

2. ALL REINFORCING STEEL SHALL HAVE 3" CLEAR COVER, UNLESS NOTED OTHERWISE.

WORK THIS SHEET WITH SHEETS C-35A, C-42A & C-47.

REVISIONS

DATE	BY	DESCRIPTION	DATE	BY	DESCRIPTION	DATE	BY	DESCRIPTION	DATE	BY	
	HDR	REVISED PEDESTAL ELEVATIONS AND LOCATIONS									

	NAME	DATE
DR. BY	HMG	7/94
CHK. BY	GCG	7/94
SUPV.	REJ	7/94

Greiner
Greiner, Inc.
Tampa, Florida

Engineers, Architects and Planners

BOARD OF COUNTY COMMISSIONERS
LEE COUNTY, FLORIDA
DEPARTMENT OF TRANSPORTATION

MIDPOINT BRIDGE

PROJECT NO.	SHEET NO.
5896	C-37A

BX1-45

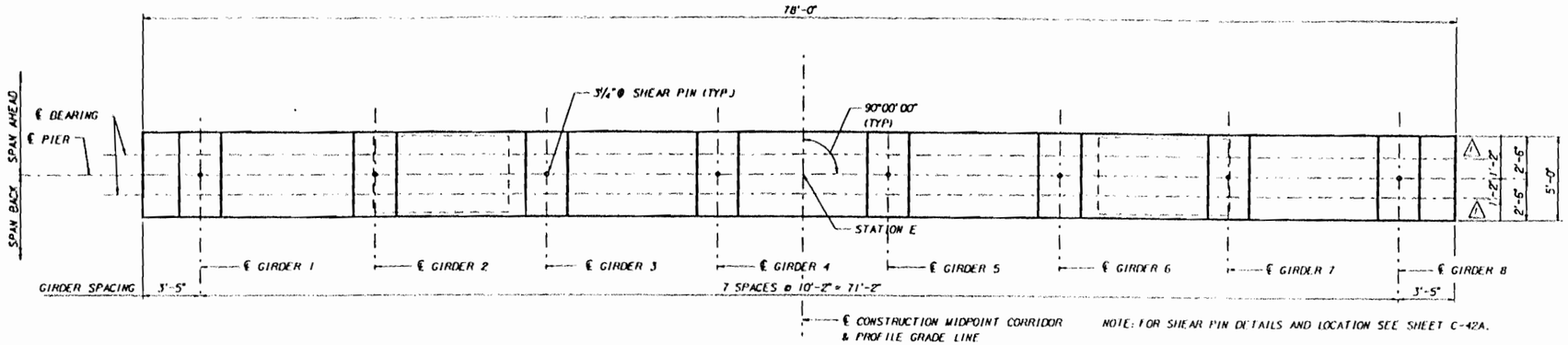

NOTE: FOR SHEAR PIN DETAILS AND LOCATION SEE SHEET C-42A.

PIER	ELEVATION		DIMENSION		STATION E	STIRRUPS
	A	B	C	D		F
33	16.958	16.958	3'-9⅝"	3'-9⅝"	2144+83.25	4
34	21.105	21.105	7'-11½"	7'-11½"	2146+28.00	8
36	30.045	30.045	16'-10¾"	16'-10¾"	2149+17.50	17
37	34.459	34.459	21'-3¾"	21'-3¾"	2150+62.25	21
39	43.289	43.289	30'-1⅝"	30'-1⅝"	2153+51.75	30
40	47.704	47.704	34'-6⅞"	34'-6⅞"	2154+96.50	34
41	52.092	52.092	38'-11⅜"	38'-11⅜"	2156+41.25	39
46	52.316	52.316	39'-2"	39'-2"	2164+50.75	39
47	47.940	47.940	34'-9⅜"	34'-9⅜"	2165+95.50	35
48	43.523	43.523	30'-4½"	30'-4½"	2167+40.25	30
50	34.689	34.689	21'-6½"	21'-6½"	2170+29.75	22
51	30.273	30.273	17'-1½"	17'-1½"	2171+74.50	17
53	21.318	21.318	8'-2"	8'-2"	2174+64.00	8
54	16.941	16.941	3'-9"	3'-9"	2176+08.75	4

PLAN

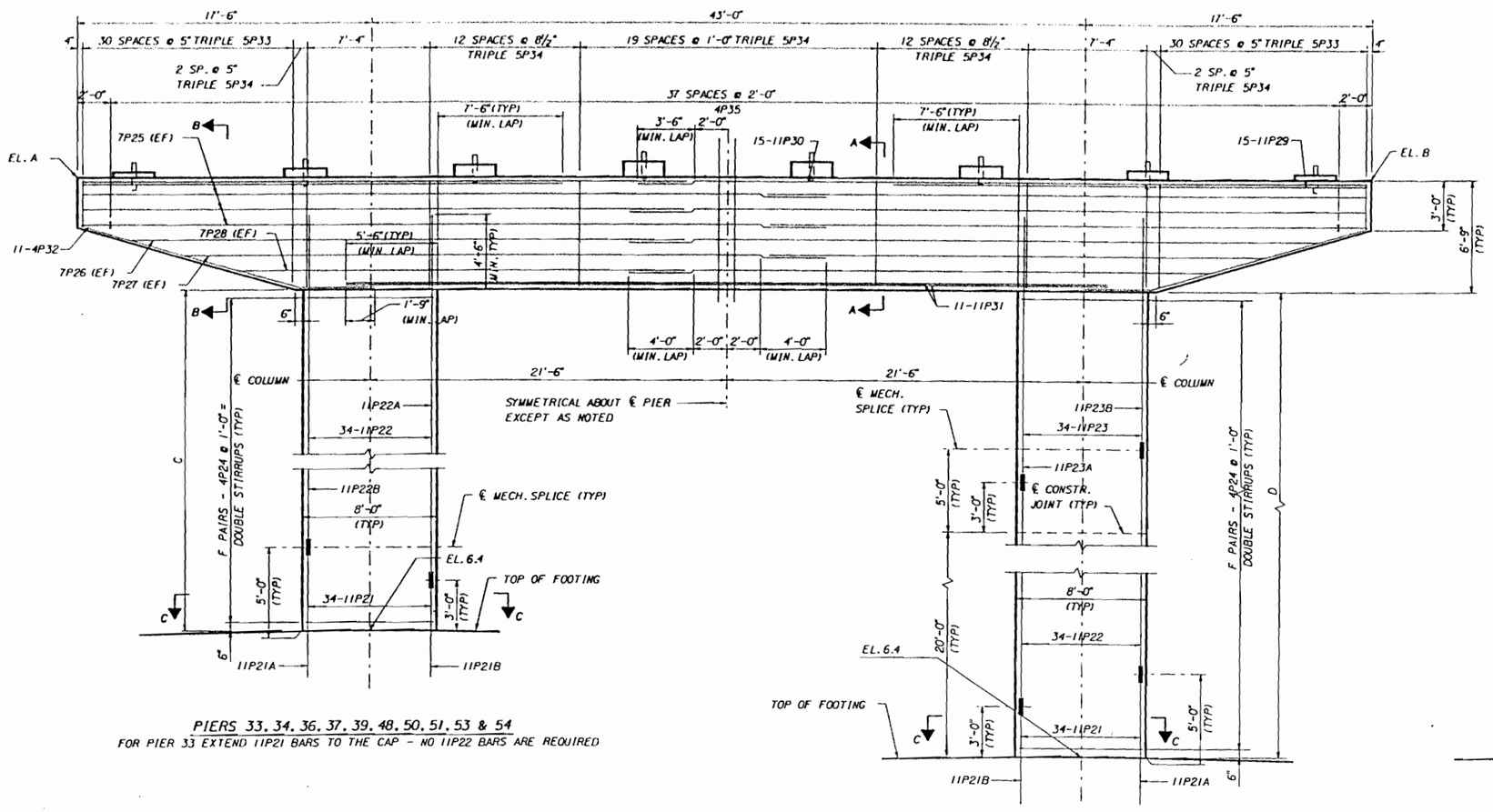

PIERS 33, 34, 36, 37, 39, 48, 50, 51, 53 & 54
FOR PIER 33 EXTEND 11P21 BARS TO THE CAP - NO 11P22 BARS ARE REQUIRED

ELEVATION

PIERS 40 & 41 AND 46 & 47

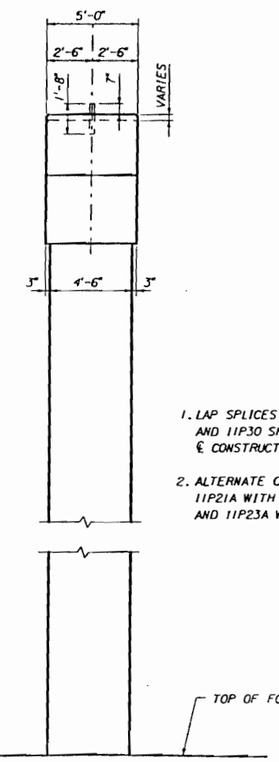

END ELEVATION

NOTES

1. LAP SPLICES FOR BARS 7P25, 7P26, 7P27, 7P28 AND 11P30 SHALL ALTERNATE ABOUT ℄ CONSTRUCTION.
2. ALTERNATE COLUMN REINFORCEMENT 11P21A WITH 11P21B, 11P22A WITH 11P22B AND 11P23A WITH 11P23B.

WORK THIS SHEET WITH SHEETS C-38A, C-42A, C-48 & C-49.

REVISIONS

DATE	BY	DESCRIPTION	DATE	BY	DESCRIPTION	DATE	BY	DESCRIPTION	DATE	BY
5/96	HDR	REVISED PEDESTAL ELEVATIONS AND LOCATIONS								

	NAME	DATE
DR. BY	HNG	3/94
CHK. BY	MH	7/94
SUPV.	REJ	3/94

Greiner
Greiner, Inc.
Tampa, Florida

Engineers, Architects and Planners

BOARD OF COUNTY COMMISSIONERS
LEE, COUNTY, FLORIDA
DEPARTMENT OF TRANSPORTATION

△ MIDPOINT BRIDGE
PIERS 33, 34, 36, 37, 39, 48

PROJECT NO	SHEET NO
5896	C-37A2

BX1-46

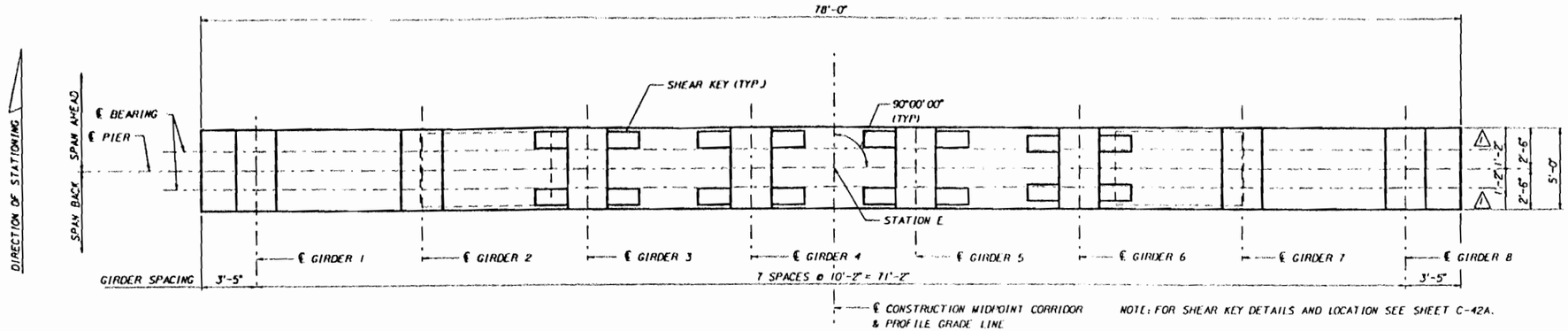

NOTE: FOR SHEAR KEY DETAILS AND LOCATION SEE SHEET C-42A.

PLAN

PIER	ELEVATION		DIMENSION		STATION E	STIRRUPS
	A	B	C	D		F
35	25.583	25.583	12'-5¼"	12'-5¼"	2147+72.75	12
38	38.827	38.827	25'-8"	25'-8"	2152+07.00	25
49	39.059	39.059	25'-10⅞"	25'-10⅞"	2168+85.00	26
52	25.809	25.809	12'-7⅞"	12'-7⅞"	2173+19.25	13

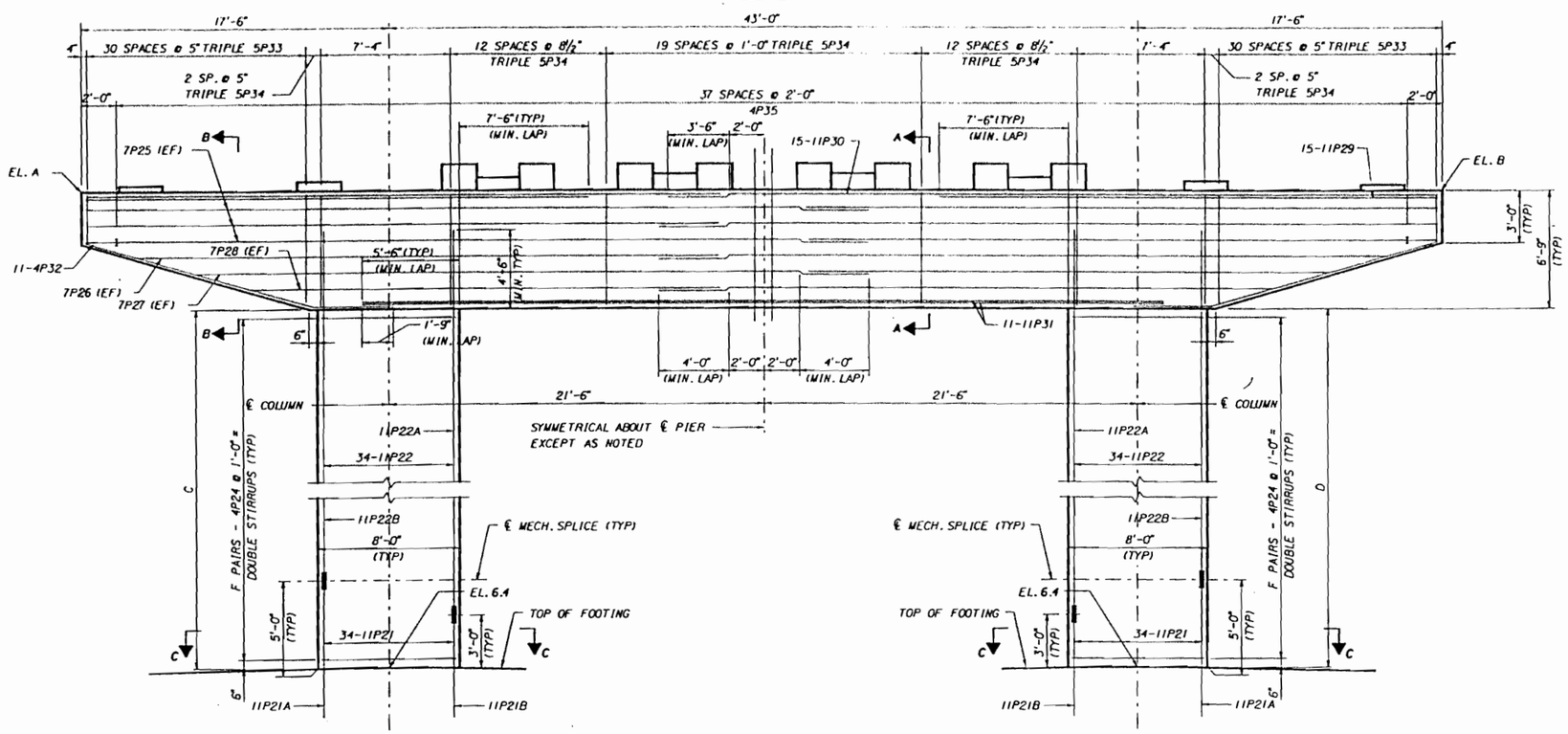

ELEVATION
PIERS 35, 38, 49 & 52

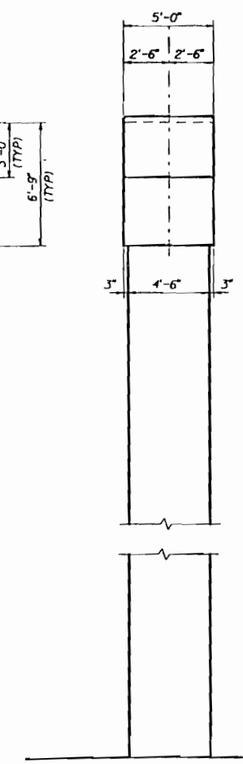

END ELEVATION

NOTES

1. LAP SPLICES FOR BARS 7P25, 7P26, 7P27, 7P28 AND 11P30 SHALL ALTERNATE ABOUT ℄ CONSTRUCTION.
2. ALTERNATE COLUMN REINFORCEMENT 11P21A WITH 11P21B, 11P22A WITH 11P22B AND 11P23A WITH 11P23B.

WORK THIS SHEET WITH SHEETS C-38A, C-42A, C-48 & C-49.

REVISIONS

DATE	BY	DESCRIPTION	DATE	BY	DESCRIPTION	DATE	BY	DESCRIPTION	DATE	BY
5/96	HDR	REVISED PEDESTAL ELEVATIONS AND LOCATIONS								

	NAME	DATE
DR. BY	HMG	3/94
CHK. BY	MH	7/94
SUPV.	REJ	3/94

Greiner
Greiner, Inc.
Tampa, Florida

Engineers, Architects and Planners

BOARD OF COUNTY COMMISSIONERS
LEE, COUNTY, FLORIDA
DEPARTMENT OF TRANSPORTATION

MIDPOINT BRIDGE
PIERS 35, 38, 49 & 52

PROJECT NO	SHEET NO
5896	C-38A

BX1-47

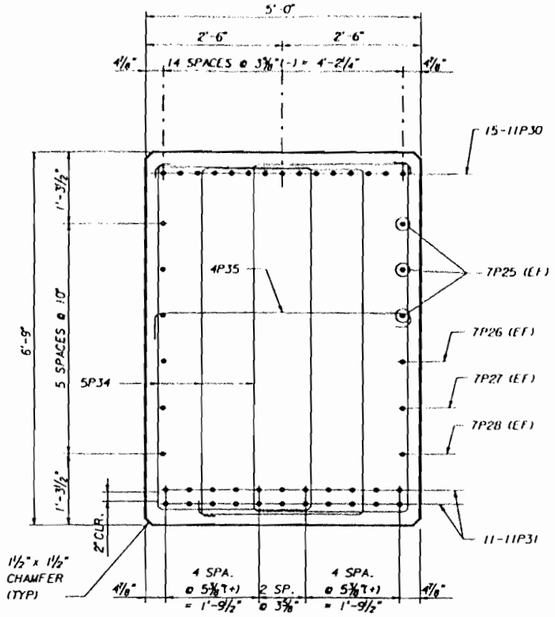

SECTION A-A
(CONCRETE PEDESTAL NOT SHOWN)

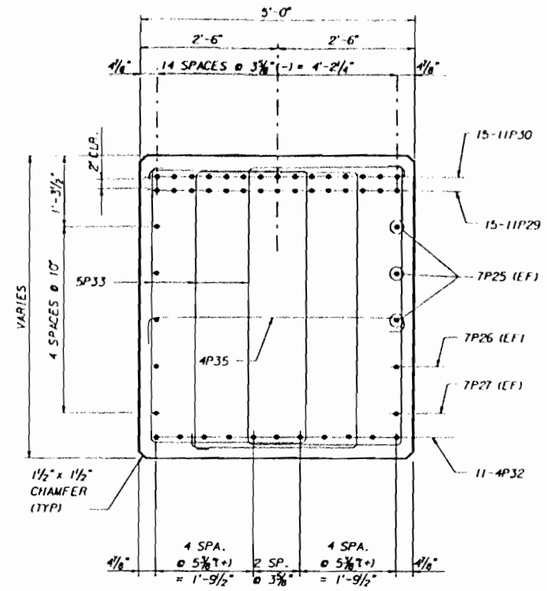

SECTION B-B

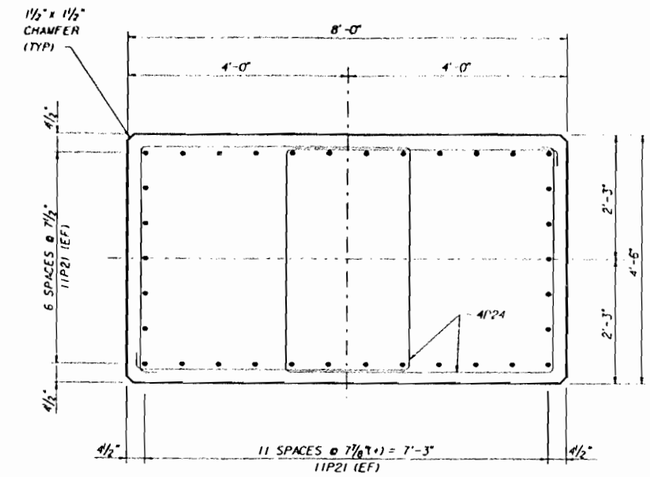

SECTION C-C

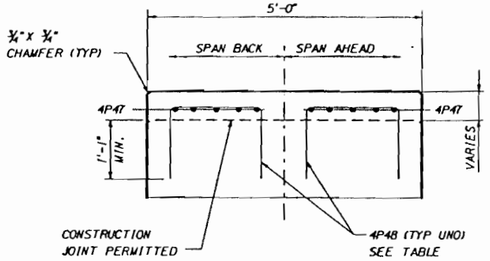

ELEVATION - PEDESTAL REINFORCING

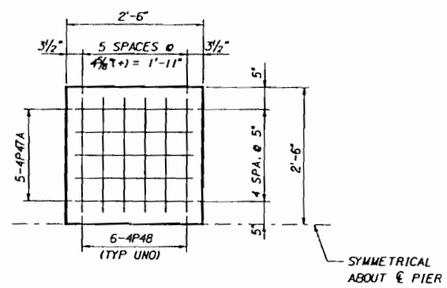

PLAN - PEDESTAL REINFORCING

NOTES

1. FOR GENERAL NOTES, SEE SHEET C-1A THRU C-3A.
2. ALL REINFORCING STEEL SHALL HAVE 3" CLEAR COVER, UNLESS NOTED OTHERWISE.
3. BEARING PEDESTAL POINT ELEVATIONS HAVE BEEN ADJUSTED TO PROVIDE A BEARING SURFACE PARALLEL TO THE BOTTOM OF THE BEAM AFTER SLAB PLACEMENT. THE ADJUSTMENTS IN ELEVATION HAVE BEEN BASED ON THE VALUES SHOWN IN THE "BUILDUP AND DEFLECTION DATA" TABLE ON SHEETS C-44A & C-45A.
4. MECHANICAL COUPLERS SHALL BE CAPABLE OF DEVELOPING 125% Fy OF BARS.
5. COST OF ALL LABOR AND MATERIALS REQUIRED TO FURNISH AND INSTALL MECHANICAL COUPLERS SHALL BE INCLUDED IN THE CONTRACT UNIT PRICE FOR REINFORCING STEEL (SUBSTRUCTURE), ITEM NO. 415-1-5.
6. LAP SPLICES MAY BE USED IN LIEU OF MECHANICAL COUPLERS. SHOP DRAWINGS SHALL BE SUBMITTED SHOWING CLASS "C" SPLICES FOR #11 COLUMN BARS.
7. IF THE OWNER ELECTS TO USE THE CORROSION INHIBITING CONCRETE ALTERNATE, CAP AND COLUMN CONCRETE QUANTITIES SHALL BE ADJUSTED AS SHOWN IN THE TABLE. COLUMN CORROSION INHIBITING CONCRETE IS TO BE PLACED FROM THE FOOTING TO THE FIRST CONSTRUCTION JOINT.

ESTIMATED QUANTITIES
(SEE NOTE 7)

ITEM		UNIT	QUANTITY																	
			PIER 33	PIER 34	PIER 35	PIER 36	PIER 37	PIER 38	PIER 39	PIER 40	PIER 41	PIER 46	PIER 47	PIER 48	PIER 49	PIER 50	PIER 51	PIER 52	PIER 53	PIER 54
CLASS IV CONCRETE (SUBSTRUCTURE)	CAP *	CU. YD.	91.00	91.19	92.76	90.99	90.99	92.76	90.99	91.04	91.20	91.17	91.06	90.99	92.76	90.99	90.99	92.76	91.21	91.71
	COLUMNS		10.15	21.21	33.15	45.05	56.82	68.47	80.37	92.14	103.85	104.44	92.77	80.99	69.09	57.44	45.66	33.76	21.78	10.11
	TOTAL		101.16	112.40	125.92	136.04	147.81	161.24	171.36	183.18	195.04	195.62	183.83	171.98	161.85	148.42	136.65	126.52	112.99	101.82
CLASS IV CONC. (SUBSTRUCTURE-MASS)	FOOTINGS		615.83	615.83	615.83	615.83	612.16	612.16	612.16	612.16	608.50	608.50	612.16	612.16	612.16	612.16	615.83	615.83	615.83	615.83
CLASS III CONCRETE	SEAL		127.28	127.28	127.28	127.28	125.94	125.94	125.94	125.94	124.61	124.61	125.94	125.94	125.94	125.94	127.28	127.28	127.28	127.28
REINFORCING STEEL (SUBSTRUCTURE)		LBS.	97857	98788	101290	102948	111126	113557	114974	116977	153496	155586	117147	115322	113911	111530	102783	101430	98937	97433
PRESTRESSED CONCRETE PILES (24" SQUARE) **		LIN. FT.	2818	2818	2818	2818	3364	3364	3364	3364	3954	3909	3364	3364	3364	3364	2818	2914	2914	2914

* PEDESTALS AND SHEAR KEYS QUANTITIES ARE INCLUDED IN CAP QUANTITIES.
** DOES NOT INCLUDE TEST PILE QUANTITIES.

ESTIMATED CORROSION INHIBITING CONCRETE ALTERNATE QUANTITIES
(SEE NOTE 7)(DEDUCT QUANTITIES FROM THE ABOVE)

ITEM		UNIT	QUANTITY																	
			PIER 33	PIER 34	PIER 35	PIER 36	PIER 37	PIER 38	PIER 39	PIER 40	PIER 41	PIER 46	PIER 47	PIER 48	PIER 49	PIER 50	PIER 51	PIER 52	PIER 53	PIER 54
CLASS IV CONCRETE WITH CORROSION INHIBITING ADDITIVES (SUBSTRUCTURE)	CAP	CU. YD.	91.00	---	---	---	---	---	---	---	---	---	---	---	---	---	---	---	---	91.71
	COLUMNS		10.15	21.21	33.15	45.05	56.82	68.47	80.37	53.34	53.34	53.34	53.34	80.99	69.09	57.44	45.66	33.76	21.78	10.11

WORK THIS SHEET WITH SHEET C-37A, C-37A2 & C-42A.

REVISIONS

DATE	BY	DESCRIPTION	DATE	BY	DESCRIPTION	DATE	BY	DESCRIPTION	DATE	BY	
5/96	HDR	REVISED PEDESTAL ELEVATIONS AND LOCATIONS									

	NAME	DATE
DR. BY	HNG	3/94
CHK. BY	WH	7/94
SUPV.	REJ	3/94

Greiner
Greiner, Inc.
Tampa, Florida

Engineers, Architects and Planners

BOARD OF COUNTY COMMISSIONERS
LEE COUNTY, FLORIDA
DEPARTMENT OF TRANSPORTATION

MIDPOINT BRIDGE
PIER DETAILS

PROJECT NO.	SHEET NO
5896	C-39A

BX1-48

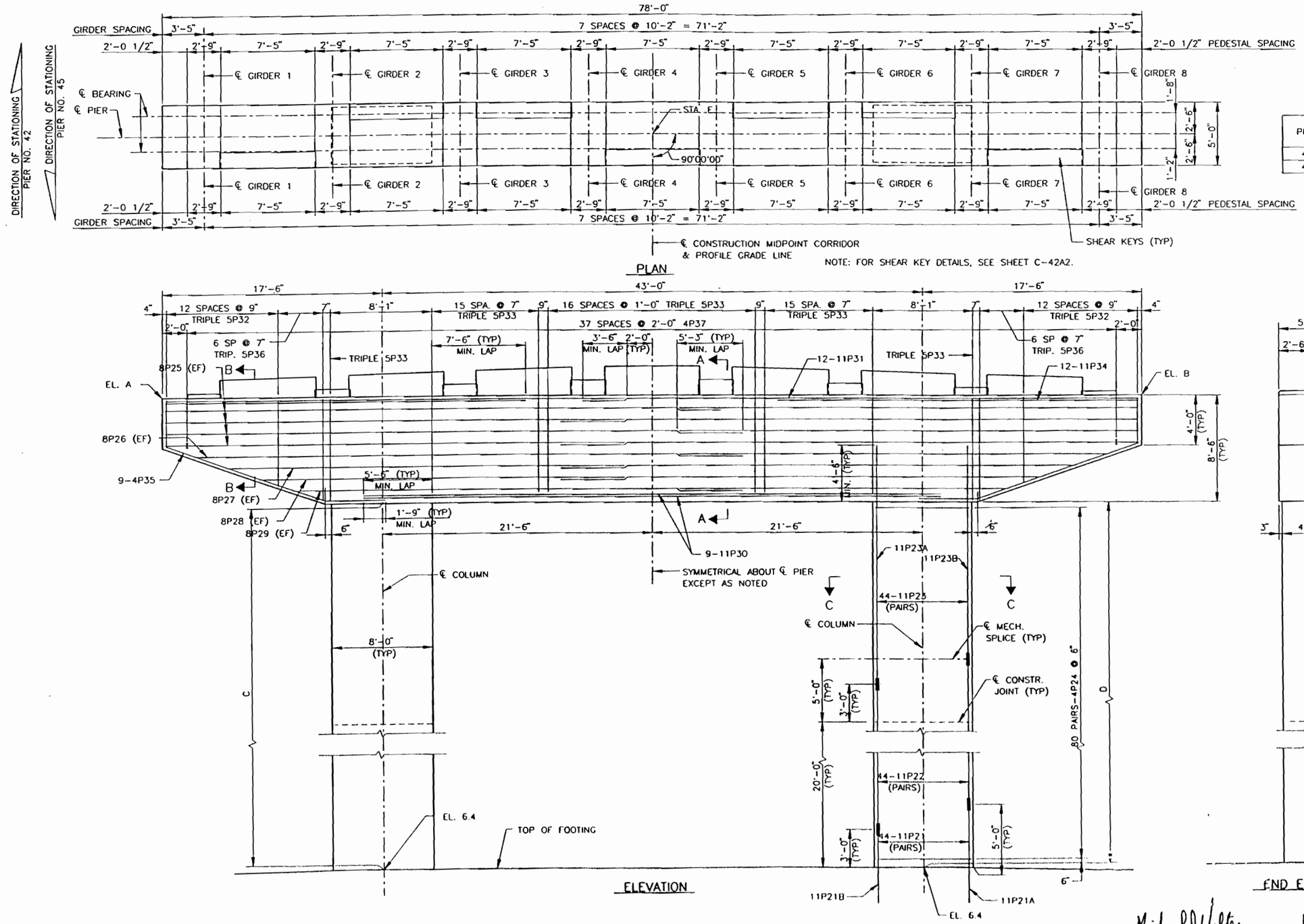

PIER	ELEVATION	DIMENSION	STATION
	A & B	C & D	E
42	55.397	40'-6"	2157+86.00
45	55.535	40'-7 5/8"	2163+06.00

NOTES

1. LAP SPLICES FOR 11P25,11P26,11P27,11P28 AND 11P30 SHALL ALTERNATE ABOUT ℄ CONSTRUCTION.
2. ALTERNATE COLUMN REINFORCEMENT 11P21A WITH 11P21B AND 11P23A WITH 11P23B

Michael J. Halter
5/3/96

WORK THIS SHEET WITH SHEETS C-41A, C-42A2 & C-50

FINLEY McNARY/JANSSEN SPAANS
a Joint Venture

Finley McNary Engineers, Inc
1391 Timberlane Road Suite 200
Tallahassee, Florida 32312-1721

Janssen & Spaans Engineers, Inc.
2825 East 56th Street
Indianapolis, Indiana 46220

REVISIONS

DATE	BY	DESCRIPTION	DATE	BY	DESCRIPTION	DATE	BY	DESCRIPTION	DATE	BY

	NAME	DATE
DR. BY	TAL	1/96
CHK. BY	MJH	1/96

FINLEY McNARY/JANSSEN SPAANS

BOARD OF COUNTY COMMISSIONERS
LEE COUNTY, FLORIDA

MIDPOINT BRIDGE

PROJECT NO	SHEET NO
5896	C-40A

BX1-49

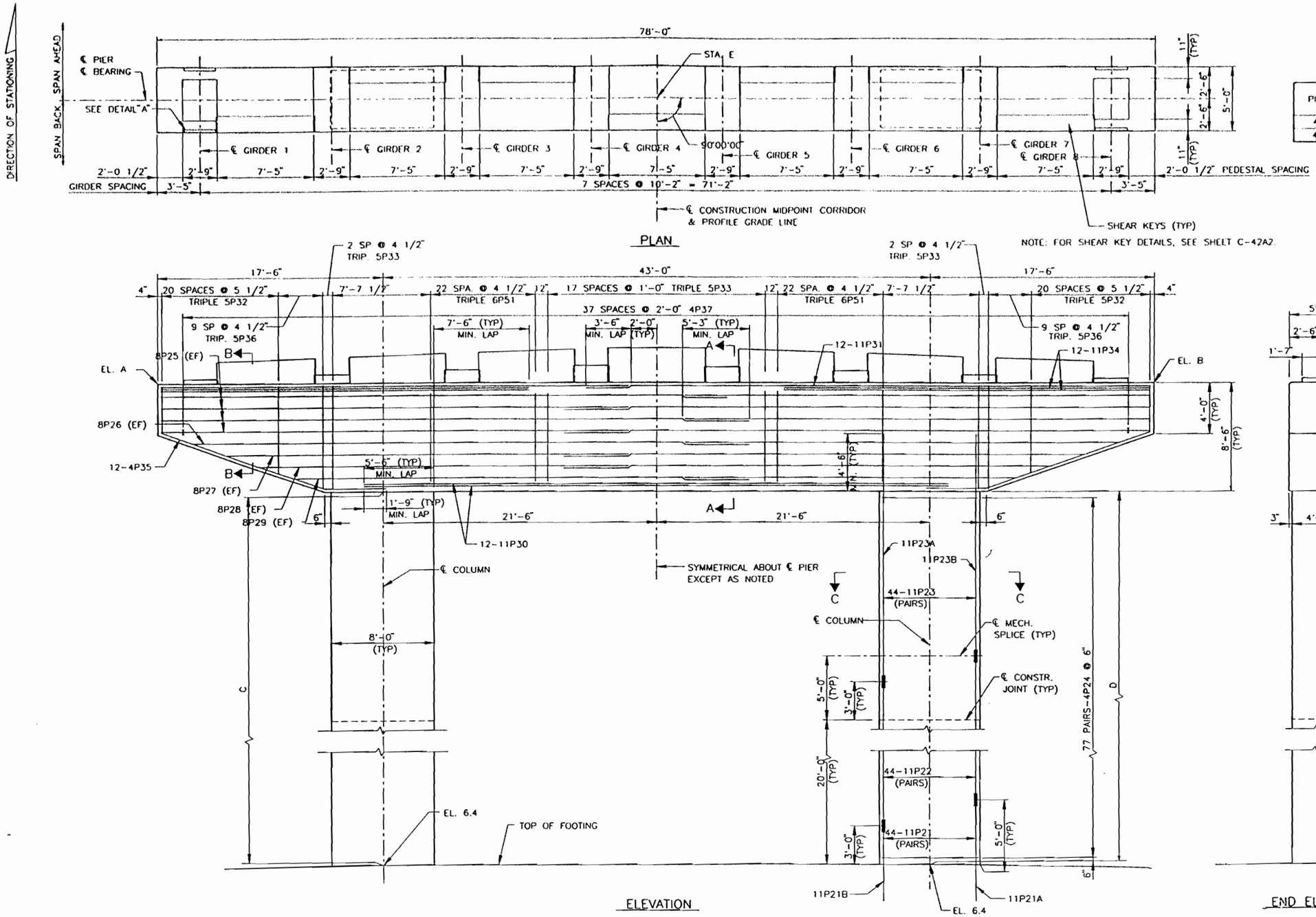

PIER	ELEVATION	DIMENSION	STATION
	A & B	C & D	E
43	53.833	38'-11 1/4"	2159+46.00
44	53.886	38'-11 7/8"	2161+46.00

Michael J. Halter
5/3/96

WORK THIS SHEET WITH SHEETS C-41A, C-42A2 & C-50.

FINLEY McNARY/JANSSEN SPAANS
a Joint Venture

Finley McNary Engineers, Inc
1391 Timberlane Road Suite 200
Tallahassee, Florida 32312-1721

Janssen & Spaans Engineers, Inc.
2825 East 56th Street
Indianapolis, Indiana 46220

REVISIONS

DATE	BY	DESCRIPTION	DATE	BY	DESCRIPTION	DATE	BY	DESCRIPTION	DATE	BY

	NAME	DATE
DR. BY	TAL	1/96
CHK. BY	MJH	1/96
SUPV.	MJH	1/96

FINLEY McNARY/JANSSEN SPAANS

BOARD OF COUNTY COMMISSIONERS
LEE, COUNTY, FLORIDA

MIDPOINT BRIDGE

PROJECT NO.	SHEET NO
5896	C-41A

BX1-50

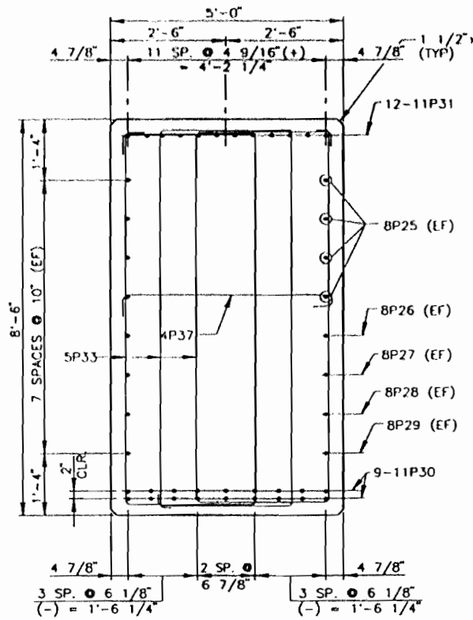

SECTION A-A

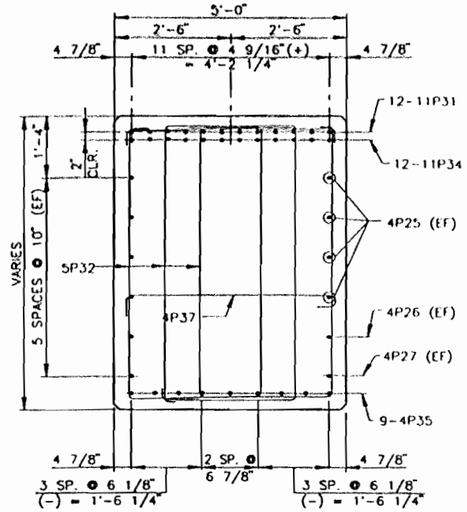

SECTION B-B

CAP SECTION PIER 42 AND 45

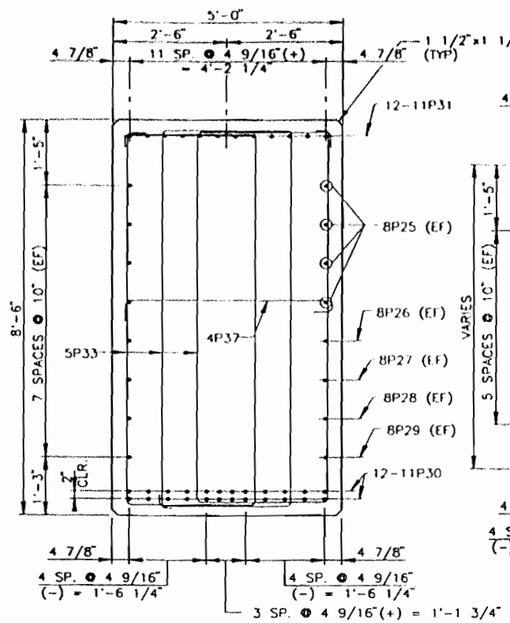

SECTION (A-A)

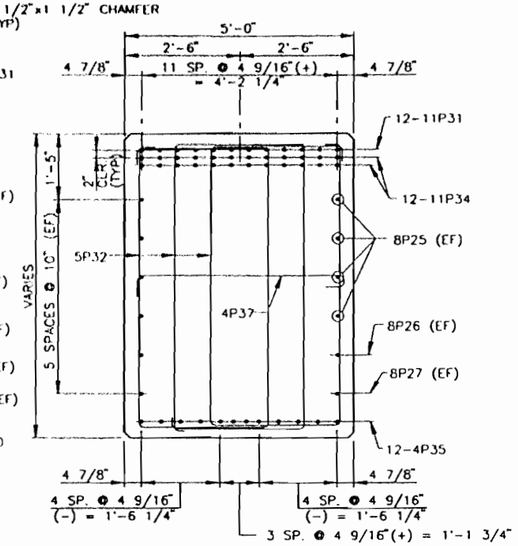

SECTION (B-B)

CAP SECTION PIER 43 AND 44

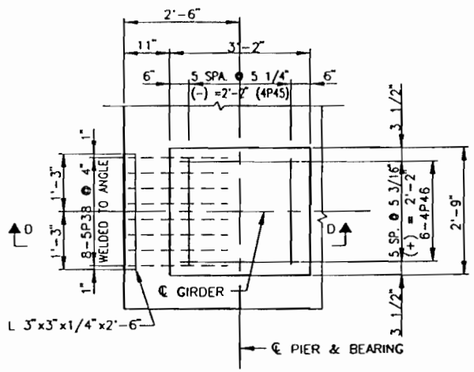

DETAIL A
PLAN

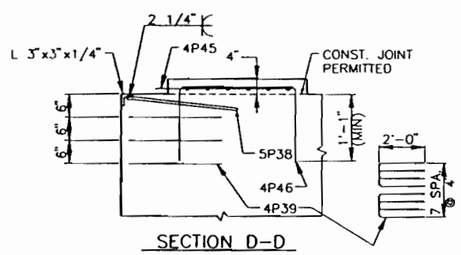

SECTION D-D

PEDESTAL REINFORCING
(PIERS 43 & 44, GIRDERS 1 & 8)

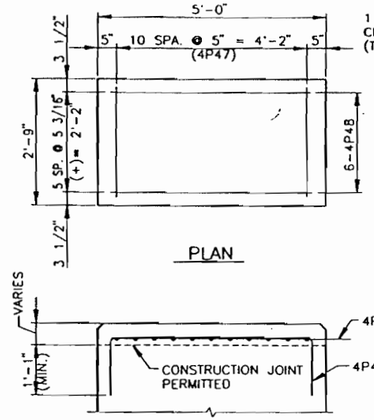

PLAN

ELEVATION

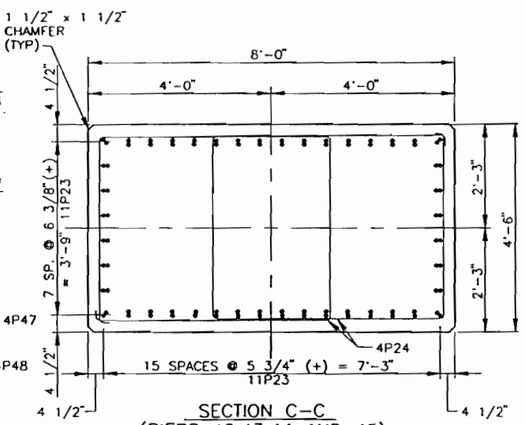

SECTION C-C
(PIERS 42,43,44 AND 45)

PEDESTAL REINFORCING
(PIERS 43 & 44, GIRDERS 2 THRU 7)

ESTIMATED QUANTITIES (SEE NOTE 7 ON SHEET C-38A)						
ITEM		UNIT	QUANTITY			
			PIER 42	PIER 43	PIER 44	PIER 45
CLASS IV CONCRETE (SUBSTRUCTURE)	CAP •	CU. YD.	118.03	121.17	121.17	118.03
	COLUMNS		108.00	103.84	103.98	108.37
	TOTAL		226.03	225.01	225.15	226.40
CLASS IV CONCR. (SUBSTRUCTURE-MASS)	FOOTINGS		608.50	608.50	608.50	608.50
CLASS III CONCRETE	SEAL		124.61	124.61	124.61	124.61
REINFORCING STEEL (SUBSTRUCTURE)		LBS.	188324	200035	200035	188324
PRESTRESSED CONCRETE PILES (24" SQUARE) ••		LIN. FT.	3909	3909	3909	3909

• PEDESTALS AND SHEAR KEYS QUANTITIES ARE INCLUDED IN CAP QUANTITIES.
•• DOES NOT INCLUDE TEST PILE QUANTITIES.

CORROSION INHIBITING CONCRETE ALTERNATE QUANTITIES (SEE NOTE 7 ON SHEET C-38A. DEDUCT QUANTITIES FROM THE ABOVE)						
ITEM		UNIT	QUANTITY			
			PIER 42	PIER 43	PIER 44	PIER 45
CLASS IV CONCRETE WITH CORROSION INHIBITING ADDITIVES (SUBSTRUCTURE)	COLUMNS	CU. YD.	53.34	53.34	53.34	53.34

Michael J. Halter
5/3/96

NOTES

1. FOR GENERAL NOTES, SEE SHEETS C-1A THRU C-3A.
2. ALL REINFORCING STEEL SHALL HAVE 3" CLEAR COVER, UNLESS NOTED OTHERWISE.
4. MECHANICAL COUPLERS SHALL BE CAPABLE OF DEVELOPING 125% Fy OF BARS.
5. COST OF ALL LABOR AND MATERIALS REQUIRED TO FURNISH AND INSTALL MECHANICAL COUPLERS SHALL BE INCLUDED IN THE CONTRACT UNIT PRICE FOR REINFORCING STEEL (SUBSTRUCTURE), ITEM NO. 415-1-5.

WORK THIS SHEET WITH SHEET C-39A & C-40A.

FINLEY McNARY/JANSSEN SPAANS
a Joint Venture

Finley McNary Engineers, Inc
1391 Timberlane Road Suite 200
Tallahassee, Florida 32312-1721

Janssen & Spaans Engineers, Inc.
2825 East 56th Street
Indianapolis, Indiana 46220

REVISIONS											
DATE	BY	DESCRIPTION	DATE	BY	DESCRIPTION	DATE	BY	DESCRIPTION	DATE	BY	

	NAME	DATE
DR. BY	TAL	1/96
CHK. BY	MJH	1/96
SUPV.		

FINLEY McNARY/JANSSEN SPAANS

BOARD OF COUNTY COMMISSIONERS
LEE, COUNTY, FLORIDA

MIDPOINT BRIDGE
PIER DETAILS

21

PROJECT NO	SHEET NO
5896	C-12A

BX1-51

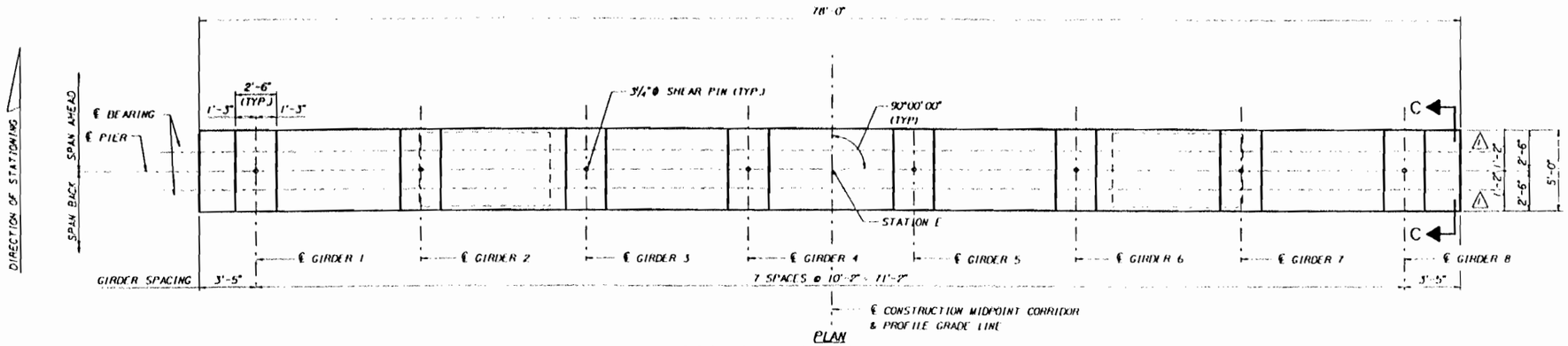

PLAN
(SHEAR PIN LOCATIONS FOR PIERS 33, 34, 36, 37, 39, 40, 41, 46, 47, 48, 50, 51, 53 AND 54)

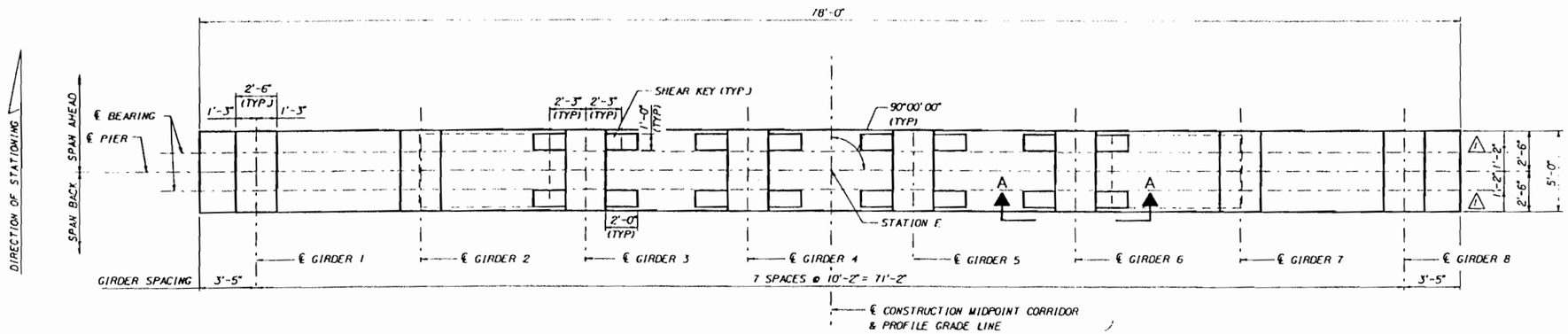

PLAN
(SHEAR KEY LOCATIONS FOR PIERS 35, 38, 49 AND 52

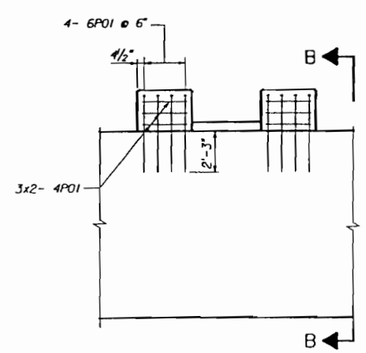

SECTION A-A

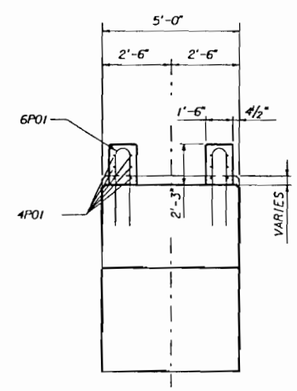

SECTION B-B

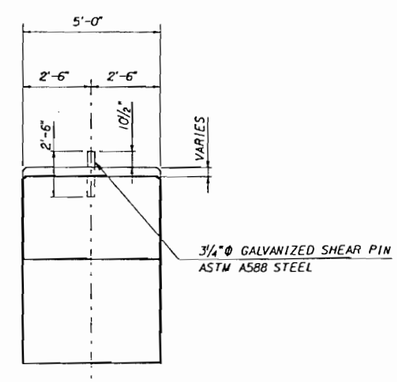

SECTION C-C

WORK THIS SHEET WITH SHEETS C-35A, C-37A, C-37A2, C-39A & C-40A.

FINLEY McNARY/JANSSEN SPAANS
a Joint Venture

Finley McNary Engineers, Inc
1391 Timberlane Road Suite 200
Tallahassee, Florida 32312-1721

Janssen & Spaans Engineers, Inc.
2825 East 56th Street
Indianapolis, Indiana 46220

REVISIONS												
DATE	BY	DESCRIPTION	DATE	BY	DESCRIPTION	DATE	BY	DESCRIPTION	DATE	BY		

	NAME	DATE
DR. BY	J.L.S.	1/96
CHK. BY	C.W.N.	1/96
SUPV.	H.D.R.	1/96

FINLEY McNARY/JANSSEN SPAANS

BOARD OF COUNTY COMMISSIONERS
LEE, COUNTY, FLORIDA
DEPARTMENT OF TRANSPORTATION

MIDPOINT BRIDGE
SHEAR KEY AND PEDESTAL DETAILS
PIERS 33 THRU 41 & 46 THRU 54

PROJECT NO.	SHEET NO
5896	C-42A2

BX1-52

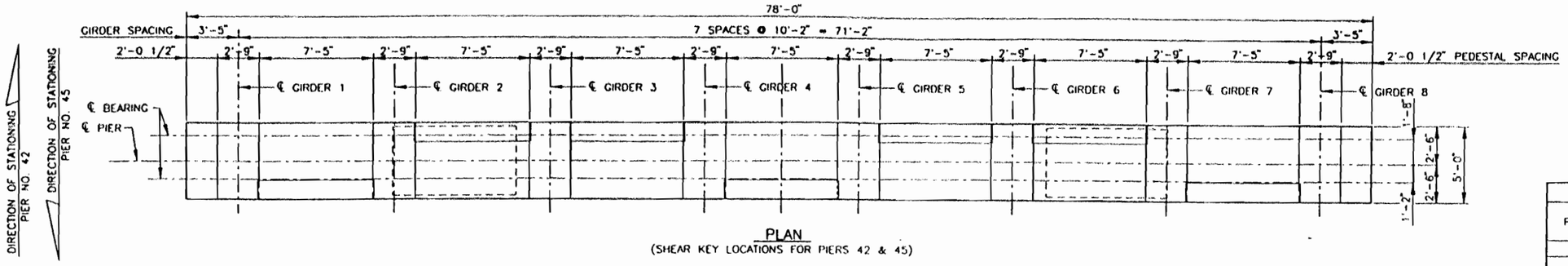

PLAN
(SHEAR KEY LOCATIONS FOR PIERS 42 & 45)

SHEAR KEY VARIABLES					
PIER	"A"		"B"	"C"*	"D"*
	BACK	AHEAD			
42	1'-0"	1'-0"	10"	4	–
43	1'-8"	1'-8"	1'-4"	4	48
44	1'-8"	1'-8"	1'-4"	4	48
45	1'-0"	1'-0"	10"	4	–

* C AND D VALUES ARE GIVEN PER SHEAR KEY.

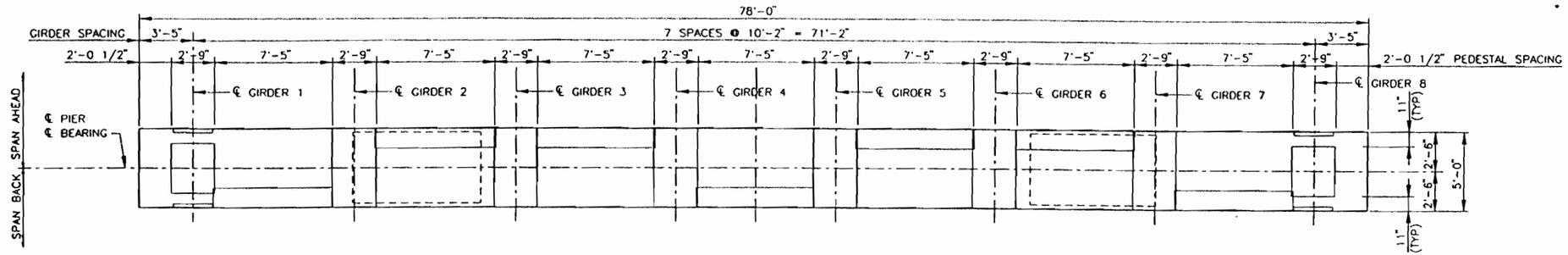

PLAN
(SHEAR KEY LOCATIONS FOR PIERS 43 & 44)

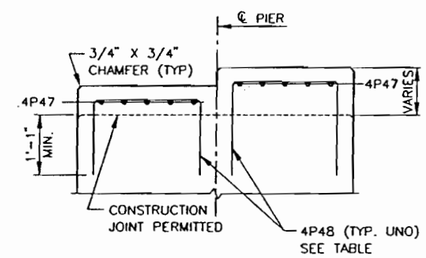

ELEVATION – PEDESTAL REINFORCING

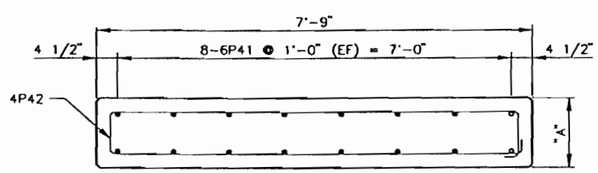

PLAN – SHEAR KEYS

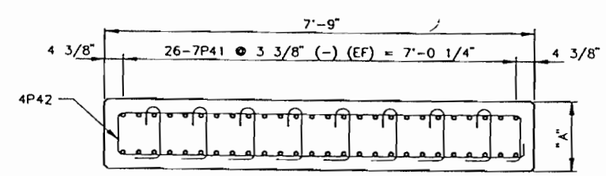

PLAN – SHEAR KEYS

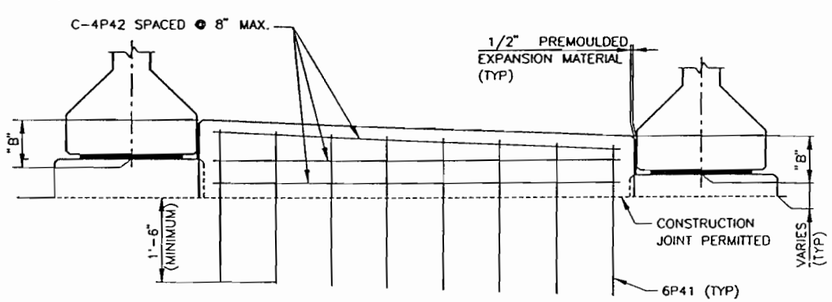

ELEVATION

SHEAR KEY DETAILS
(PIERS 42 & 45)

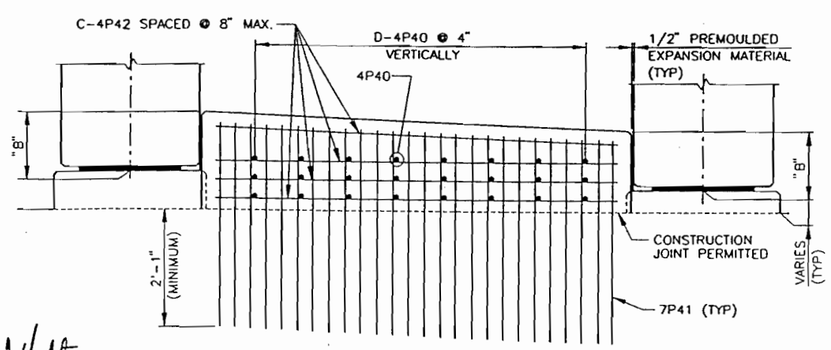

ELEVATION

SHEAR KEY DETAILS
(PIERS 43 & 44)

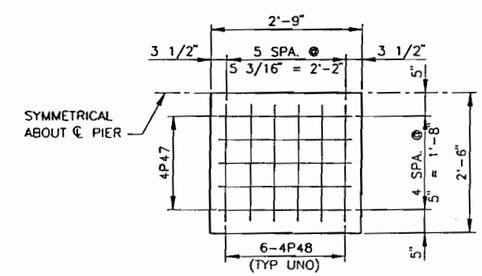

PLAN – PEDESTAL REINFORCING
(PIERS 42 AND 45)
(SEE SHEET C-41A FOR PIERS 43 & 44)

Michael J. Fulton
5/3/96

NOTE: ALL REINFORCING STEEL SHALL HAVE 3" CLEAR COVER UNLESS NOTED OTHERWISE.

WORK THIS SHEET WITH SHEETS C-39A & C-40A.

FINLEY McNARY/JANSSEN SPAANS
a Joint Venture

Finley McNary Engineers, Inc
1391 Timberlane Road Suite 200
Tallahassee, Florida 32312-1721

Janssen & Spaans Engineers, Inc.
2825 East 56th Street
Indianapolis, Indiana 46220

REVISIONS

DATE	BY	DESCRIPTION	DATE	BY	DESCRIPTION	DATE	BY	DESCRIPTION	DATE	BY

	NAME	DATE
DR. BY	TAL	1/96
CHK. BY	MJH	1/96
SUPV.	MJH	1/96

FINLEY McNARY/JANSSEN SPAANS

BOARD OF COUNTY COMMISSIONERS
LEE, COUNTY, FLORIDA
DEPARTMENT OF TRANSPORTATION

MIDPOINT BRIDGE
SHEAR KEY AND PEDESTAL DETAILS

BEARING PEDESTAL POINT ELEVATIONS

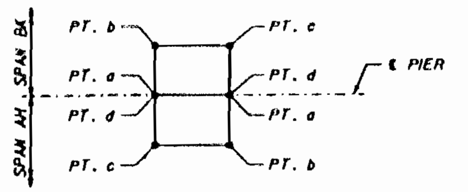

SPAN		GIRDER	PT. a	PT. b	PT. c	PT. d
PIERS 2 THRU 10	SPAN BACK	1	17.482	17.482	17.482	17.482
		2	16.951	16.951	16.951	16.951
		3	16.407	16.407	16.407	16.407
		4	15.869	15.869	15.869	15.869
		5	15.322	15.322	15.322	15.322
		6	14.807	14.807	14.807	14.807
		7	14.270	14.270	14.270	14.270
		8	13.733	13.733	13.733	13.733
		9	13.248	13.248	13.248	13.248
	SPAN AHEAD	1	17.482	17.482	17.482	17.482
		2	16.951	16.951	16.951	16.951
		3	16.407	16.407	16.407	16.407
		4	15.869	15.869	15.869	15.869
		5	15.322	15.322	15.322	15.322
		6	14.807	14.807	14.807	14.807
		7	14.270	14.270	14.270	14.270
		8	13.733	13.733	13.733	13.733
		9	13.248	13.248	13.248	13.248
PIER 11	SPAN BACK	1	17.482	17.482	17.482	17.482
		2	16.951	16.951	16.951	16.951
		3	16.407	16.407	16.407	16.407
		4	15.869	15.869	15.869	15.869
		5	15.322	15.322	15.322	15.322
		6	14.807	14.807	14.807	14.807
		7	14.270	14.270	14.270	14.270
		8	13.733	13.733	13.733	13.733
		9	13.248	13.248	13.248	13.248
	SPAN AHEAD	1	17.688	17.678	17.678	17.688
		2	17.122	17.114	17.114	17.122
		3	16.543	16.536	16.536	16.542
		4	15.970	15.966	15.965	15.970
		5	15.388	15.385	15.383	15.388
		6	14.838	14.837	14.837	14.838
		7	14.266	14.268	14.268	14.268
		8	13.694	13.698	13.698	13.694
		9	13.172	13.176	13.176	13.172
PIER 12	SPAN BACK	1	17.224	17.234	17.233	17.224
		2	16.739	16.747	16.746	16.738
		3	16.239	16.245	16.245	16.239
		4	15.747	15.752	15.751	15.747
		5	15.245	15.248	15.248	15.245
		6	14.775	14.777	14.777	14.775
		7	14.283	14.283	14.283	14.283
		8	13.791	13.789	13.789	13.791
		9	13.349	13.345	13.345	13.349
	SPAN AHEAD	1	17.051	17.032	17.032	17.050
		2	16.606	16.590	16.590	16.605
		3	16.148	16.136	16.135	16.147
		4	15.683	15.675	15.674	15.683
		5	15.204	15.198	15.198	15.204
		6	14.769	14.767	14.767	14.769
		7	14.313	14.314	14.314	14.313
		8	13.857	13.860	13.861	13.857
		9	13.395	13.402	13.402	13.395

SPAN		GIRDER	PT. a	PT. b	PT. c	PT. d
PIER 13	SPAN BACK	1	16.182	16.200	16.200	16.182
		2	15.887	15.902	15.902	15.887
		3	15.579	15.591	15.591	15.579
		4	15.265	15.274	15.274	15.265
		5	14.938	14.941	14.941	14.938
		6	14.651	14.654	14.654	14.651
		7	14.345	14.344	14.344	14.345
		8	14.039	14.035	14.035	14.039
		9	13.727	13.719	13.719	13.727
	SPAN AHEAD	1	16.178	16.159	16.159	16.178
		2	15.886	15.870	15.870	15.886
		3	15.579	15.567	15.567	15.579
		4	15.273	15.264	15.264	15.273
		5	14.944	14.939	14.939	14.944
		6	14.675	14.672	14.672	14.675
		7	14.383	14.382	14.382	14.383
		8	14.091	14.093	14.093	14.091
		9	13.785	13.790	13.790	13.785
PIER 14	SPAN BACK	1	15.309	15.327	15.327	15.309
		2	15.167	15.182	15.182	15.167
		3	15.011	15.023	15.023	15.011
		4	14.855	14.864	14.864	14.855
		5	14.676	14.682	14.682	14.676
		6	14.525	14.528	14.528	14.525
		7	14.355	14.355	14.355	14.355
		8	14.184	14.182	14.182	14.184
		9	13.999	13.995	13.995	13.999
	SPAN AHEAD	1	15.308	15.290	15.290	15.308
		2	15.167	15.151	15.151	15.167
		3	15.011	14.998	14.998	15.011
		4	14.855	14.846	14.846	14.855
		5	14.676	14.670	14.670	14.676
		6	14.511	14.505	14.505	14.511
		7	14.326	14.320	14.320	14.326
		8	14.141	14.135	14.135	14.141
		9	13.942	13.936	13.936	13.942
PIER 15	SPAN BACK	1	14.436	14.454	14.454	14.436
		2	14.445	14.460	14.460	14.445
		3	14.440	14.452	14.452	14.440
		4	14.435	14.444	14.444	14.435
		5	14.408	14.414	14.414	14.408
		6	14.229	14.235	14.235	14.229
		7	14.044	14.050	14.050	14.044
		8	13.859	13.865	13.865	13.859
		9	13.660	13.666	13.666	13.660
	SPAN AHEAD	1	14.436	14.417	14.417	14.436
		2	14.445	14.429	14.429	14.445
		3	14.440	14.427	14.427	14.440
		4	14.435	14.426	14.426	14.435
		5	14.408	14.402	14.402	14.408
		6	14.229	14.223	14.223	14.229
		7	14.044	14.038	14.038	14.044
		8	13.859	13.853	13.853	13.859
		9	13.660	13.654	13.654	13.660

SPAN		GIRDER	PT. a	PT. b	PT. c	PT. d
PIER 16	SPAN BACK	1	13.537	13.556	13.556	13.537
		2	13.697	13.713	13.713	13.697
		3	13.844	13.858	13.858	13.844
		4	13.990	13.999	13.999	13.990
		5	14.114	14.120	14.120	14.114
		6	13.947	13.953	13.953	13.947
		7	13.762	13.768	13.768	13.762
		8	13.577	13.583	13.583	13.577
		9	13.378	13.384	13.384	13.378
	SPAN AHEAD	1	13.430	13.422	13.422	13.430
		2	13.610	13.602	13.602	13.610
		3	13.775	13.769	13.769	13.775
		4	13.941	13.935	13.935	13.941
		5	14.084	14.079	14.079	14.084
		6	13.918	13.913	13.913	13.918
		7	13.733	13.728	13.728	13.733
		8	13.548	13.543	13.543	13.548
		9	13.349	13.344	13.344	13.349
PIER 17	SPAN BACK	1	13.048	13.057	13.057	13.048
		2	13.267	13.274	13.274	13.287
		3	13.471	13.478	13.478	13.471
		4	13.678	13.681	13.681	13.678
		5	13.858	13.863	13.863	13.858
		6	13.695	13.700	13.700	13.695
		7	13.510	13.515	13.515	13.510
		8	13.325	13.330	13.330	13.325
		9	13.126	13.131	13.131	13.126
	SPAN AHEAD	1	13.156	13.156	13.156	13.156
		2	13.355	13.355	13.355	13.355
		3	13.540	13.540	13.540	13.540
		4	13.725	13.725	13.725	13.725
		5	13.888	13.888	13.888	13.888
		6	13.725	13.725	13.725	13.725
		7	13.540	13.540	13.540	13.540
		8	13.355	13.355	13.355	13.355
		9	13.156	13.156	13.156	13.156
PIERS 18 THRU 27	SPAN BACK	1	13.156	13.156	13.156	13.156
		2	13.355	13.355	13.355	13.355
		3	13.540	13.540	13.540	13.540
		4	13.725	13.725	13.725	13.725
		5	13.888	13.888	13.888	13.888
		6	13.725	13.725	13.725	13.725
		7	13.540	13.540	13.540	13.540
		8	13.355	13.355	13.355	13.355
		9	13.156	13.156	13.156	13.156
	SPAN AHEAD	1	13.156	13.156	13.156	13.156
		2	13.355	13.355	13.355	13.355
		3	13.540	13.540	13.540	13.540
		4	13.725	13.725	13.725	13.725
		5	13.888	13.888	13.888	13.888
		6	13.725	13.725	13.725	13.725
		7	13.540	13.540	13.540	13.540
		8	13.355	13.355	13.355	13.355
		9	13.156	13.156	13.156	13.156

SPAN		GIRDER	PT. a	PT. b	PT. c	PT. d
PIER 28	SPAN BACK	1	13.156	13.156	13.156	13.156
		2	13.355	13.355	13.355	13.355
		3	13.540	13.540	13.540	13.540
		4	13.725	13.725	13.725	13.725
		5	13.888	13.888	13.888	13.888
		6	13.725	13.725	13.725	13.725
		7	13.540	13.540	13.540	13.540
		8	13.355	13.355	13.355	13.355
		9	13.156	13.156	13.156	13.156
	SPAN AHEAD	1	13.109	13.112	13.112	13.109
		2	13.308	13.311	13.311	13.308
		3	13.493	13.496	13.496	13.493
		4	13.678	13.681	13.681	13.678
		5	13.841	13.843	13.843	13.841
		6	13.678	13.681	13.681	13.678
		7	13.493	13.496	13.496	13.493
		8	13.308	13.311	13.311	13.308
		9	13.109	13.112	13.112	13.109
PIER 29	SPAN BACK	1	13.224	13.222	13.222	13.224
		2	13.423	13.421	13.421	13.423
		3	13.608	13.606	13.606	13.608
		4	13.793	13.791	13.791	13.793
		5	13.958	13.953	13.953	13.958
		6	13.793	13.791	13.791	13.793
		7	13.608	13.606	13.606	13.608
		8	13.423	13.421	13.421	13.423
		9	13.224	13.222	13.222	13.224
	SPAN AHEAD	1	13.215	13.227	13.227	13.215
		2	13.414	13.426	13.426	13.414
		3	13.599	13.611	13.611	13.599
		4	13.784	13.796	13.796	13.784
		5	13.947	13.959	13.959	13.947
		6	13.784	13.796	13.796	13.784
		7	13.599	13.611	13.611	13.599
		8	13.414	13.426	13.426	13.414
		9	13.215	13.227	13.227	13.215
PIER 30	SPAN BACK	1	13.754	13.743	13.743	13.754
		2	13.953	13.942	13.942	13.953
		3	14.138	14.127	14.127	14.138
		4	14.323	14.312	14.312	14.323
		5	14.486	14.474	14.474	14.486
		6	14.323	14.312	14.312	14.323
		7	14.138	14.127	14.127	14.138
		8	13.953	13.942	13.942	13.953
		9	13.754	13.743	13.743	13.754
	SPAN AHEAD	1	13.754	13.775	13.775	13.754
		2	13.953	13.974	13.974	13.953
		3	14.138	14.159	14.159	14.138
		4	14.323	14.344	14.344	14.323
		5	14.486	14.506	14.506	14.486
		6	14.323	14.344	14.344	14.323
		7	14.138	14.159	14.159	14.138
		8	13.953	13.974	13.974	13.953
		9	13.754	13.775	13.775	13.754

REVISIONS

DATE	BY	DESCRIPTION	DATE	BY	DESCRIPTION	DATE	BY	DESCRIPTION	DATE	BY	DESCRIPTION

	NAME	DATE
DR. BY	SG	3/94
CHK. BY	CFC	3/94
SUPV.	REJ	3/94

Greiner
Greiner, Inc.
Tampa, Florida
Engineers. Architects and Planners

BOARD OF COUNTY COMMISSIONERS
LEE COUNTY, FLORIDA
DEPARTMENT OF TRANSPORTATION

MIDPOINT BRIDGE
PEDESTAL ELEVATIONS (I)

FRLEECTY

PROJECT NO	SHEET NO
5896	C-44A

BX1-54

SPAN	GIRDER	ELEVATION POINTS PT. a	PT. b	PT. c	PT. d
PIER 31 SPAN BACK	1	14.760	14.740	14.740	14.760
	2	14.960	14.939	14.939	14.960
	3	15.145	15.124	15.124	15.145
	4	15.330	15.309	15.309	15.330
	5	15.492	15.471	15.471	15.492
	6	15.330	15.309	15.309	15.330
	7	15.145	15.124	15.124	15.145
	8	14.960	14.939	14.939	14.960
	9	14.760	14.740	14.740	14.760
PIER 31 SPAN AHEAD	1	14.760	14.790	14.790	14.760
	2	14.959	14.990	14.990	14.959
	3	15.144	15.175	15.175	15.144
	4	15.329	15.360	15.360	15.329
	5	15.492	15.522	15.522	15.492
	6	15.329	15.360	15.360	15.329
	7	15.144	15.175	15.175	15.144
	8	14.959	14.990	14.990	14.959
	9	14.760	14.790	14.790	14.760
PIER 32 SPAN BACK	1	16.205	16.167	16.167	16.205
	2	16.404	16.366	16.366	16.404
	3	16.589	16.551	16.551	16.589
	4	16.774	16.736	16.736	16.774
	5	16.937	16.899	16.899	16.937
	6	16.774	16.736	16.736	16.774
	7	16.589	16.551	16.551	16.589
	8	16.404	16.366	16.366	16.404
	9	16.205	16.167	16.167	16.205
PIER 32 SPAN AHEAD	1	14.201	14.201	14.201	14.201
	2	14.404	14.404	14.404	14.404
	3	14.607	14.607	14.607	14.607
	4	14.811	14.811	14.811	14.811
	5	14.811	14.811	14.811	14.811
	6	14.607	14.607	14.607	14.607
	7	14.404	14.404	14.404	14.404
	8	14.201	14.201	14.201	14.201
PIER 33 SPAN BACK	1	17.291	17.291	17.291	17.291
	2	17.495	17.495	17.495	17.495
	3	17.698	17.698	17.698	17.698
	4	17.901	17.901	17.901	17.901
	5	17.901	17.901	17.901	17.901
	6	17.698	17.698	17.698	17.698
	7	17.495	17.495	17.495	17.495
	8	17.291	17.291	17.291	17.291
PIER 33 SPAN AHEAD	1	17.383	17.383	17.383	17.383
	2	17.586	17.586	17.586	17.586
	3	17.789	17.789	17.789	17.789
	4	17.993	17.993	17.993	17.993
	5	17.993	17.993	17.993	17.993
	6	17.789	17.789	17.789	17.789
	7	17.586	17.586	17.586	17.586
	8	17.383	17.383	17.383	17.383

BEARING PEDESTAL POINT ELEVATIONS

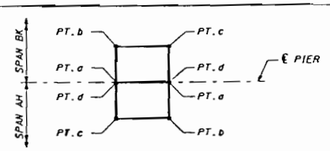

SPAN	GIRDER	ELEVATION POINTS PT. a	PT. b	PT. c	PT. d
PIER 34 SPAN BACK	1	21.438	21.438	21.438	21.438
	2	21.641	21.641	21.641	21.641
	3	21.845	21.845	21.845	21.845
	4	22.048	22.048	22.048	22.048
	5	22.048	22.048	22.048	22.048
	6	21.845	21.845	21.845	21.845
	7	21.641	21.641	21.641	21.641
	8	21.438	21.438	21.438	21.438
PIER 34 SPAN AHEAD	1	21.630	21.630	21.630	21.630
	2	21.833	21.833	21.833	21.833
	3	22.037	22.037	22.037	22.037
	4	22.240	22.240	22.240	22.240
	5	22.240	22.240	22.240	22.240
	6	22.037	22.037	22.037	22.037
	7	21.833	21.833	21.833	21.833
	8	21.630	21.630	21.630	21.630
PIER 35 SPAN BACK	1	25.916	25.916	25.916	25.916
	2	26.120	26.120	26.120	26.120
	3	26.323	26.323	26.323	26.323
	4	26.526	26.526	26.526	26.526
	5	26.526	26.526	26.526	26.526
	6	26.323	26.323	26.323	26.323
	7	26.120	26.120	26.120	26.120
	8	25.916	25.916	25.916	25.916
PIER 35 SPAN AHEAD	1	25.998	25.998	25.998	25.998
	2	26.201	26.201	26.201	26.201
	3	26.404	26.404	26.404	26.404
	4	26.608	26.608	26.608	26.608
	5	26.608	26.608	26.608	26.608
	6	26.404	26.404	26.404	26.404
	7	26.201	26.201	26.201	26.201
	8	25.998	25.998	25.998	25.998
PIER 36 SPAN BACK	1	30.378	30.378	30.378	30.378
	2	30.581	30.581	30.581	30.581
	3	30.785	30.785	30.785	30.785
	4	30.988	30.988	30.988	30.988
	5	30.988	30.988	30.988	30.988
	6	30.785	30.785	30.785	30.785
	7	30.581	30.581	30.581	30.581
	8	30.378	30.378	30.378	30.378
PIER 36 SPAN AHEAD	1	30.460	30.460	30.460	30.460
	2	30.663	30.663	30.663	30.663
	3	30.866	30.866	30.866	30.866
	4	31.070	31.070	31.070	31.070
	5	31.070	31.070	31.070	31.070
	6	30.866	30.866	30.866	30.866
	7	30.663	30.663	30.663	30.663
	8	30.460	30.460	30.460	30.460

SPAN	GIRDER	ELEVATION POINTS PT. a	PT. b	PT. c	PT. d
PIER 37 SPAN BACK	1	34.793	34.793	34.793	34.793
	2	34.996	34.996	34.996	34.996
	3	35.199	35.199	35.199	35.199
	4	35.403	35.403	35.403	35.403
	5	35.403	35.403	35.403	35.403
	6	35.199	35.199	35.199	35.199
	7	34.996	34.996	34.996	34.996
	8	34.793	34.793	34.793	34.793
PIER 37 SPAN AHEAD	1	34.874	34.874	34.874	34.874
	2	35.078	35.078	35.078	35.078
	3	35.281	35.281	35.281	35.281
	4	35.484	35.484	35.484	35.484
	5	35.484	35.484	35.484	35.484
	6	35.281	35.281	35.281	35.281
	7	35.078	35.078	35.078	35.078
	8	34.874	34.874	34.874	34.874
PIER 38 SPAN BACK	1	39.161	39.161	39.161	39.161
	2	39.364	39.364	39.364	39.364
	3	39.567	39.567	39.567	39.567
	4	39.771	39.771	39.771	39.771
	5	39.771	39.771	39.771	39.771
	6	39.567	39.567	39.567	39.567
	7	39.364	39.364	39.364	39.364
	8	39.161	39.161	39.161	39.161
PIER 38 SPAN AHEAD	1	39.242	39.242	39.242	39.242
	2	39.446	39.446	39.446	39.446
	3	39.649	39.649	39.649	39.649
	4	39.852	39.852	39.852	39.852
	5	39.852	39.852	39.852	39.852
	6	39.649	39.649	39.649	39.649
	7	39.446	39.446	39.446	39.446
	8	39.242	39.242	39.242	39.242
PIERS 39 SPAN BACK	1	43.622	43.622	43.622	43.622
	2	43.826	43.826	43.826	43.826
	3	44.029	44.029	44.029	44.029
	4	44.232	44.232	44.232	44.232
	5	44.232	44.232	44.232	44.232
	6	44.029	44.029	44.029	44.029
	7	43.826	43.826	43.826	43.826
	8	43.622	43.622	43.622	43.622
PIERS 39 SPAN AHEAD	1	43.704	43.704	43.704	43.704
	2	43.907	43.907	43.907	43.907
	3	44.111	44.111	44.111	44.111
	4	44.314	44.314	44.314	44.314
	5	44.314	44.314	44.314	44.314
	6	44.111	44.111	44.111	44.111
	7	43.907	43.907	43.907	43.907
	8	43.704	43.704	43.704	43.704

SPAN	GIRDER	ELEVATION POINTS PT. a	PT. b	PT. c	PT. d
PIER 40 SPAN BACK	1	48.037	48.037	48.037	48.037
	2	48.241	48.241	48.241	48.241
	3	48.444	48.444	48.444	48.444
	4	48.647	48.647	48.647	48.647
	5	48.647	48.647	48.647	48.647
	6	48.444	48.444	48.444	48.444
	7	48.241	48.241	48.241	48.241
	8	48.037	48.037	48.037	48.037
PIER 40 SPAN AHEAD	1	48.146	48.146	48.146	48.146
	2	48.350	48.350	48.350	48.350
	3	48.553	48.553	48.553	48.553
	4	48.756	48.756	48.756	48.756
	5	48.756	48.756	48.756	48.756
	6	48.553	48.553	48.553	48.553
	7	48.350	48.350	48.350	48.350
	8	48.146	48.146	48.146	48.146
PIER 41 SPAN BACK	1	52.425	52.425	52.425	52.425
	2	52.628	52.628	52.628	52.628
	3	52.832	52.832	52.832	52.832
	4	53.035	53.035	53.035	53.035
	5	53.035	53.035	53.035	53.035
	6	52.832	52.832	52.832	52.832
	7	52.628	52.628	52.628	52.628
	8	52.425	52.425	52.425	52.425
PIER 41 SPAN AHEAD	1	52.620	52.620	52.620	52.620
	2	52.823	52.823	52.823	52.823
	3	53.027	53.027	53.027	53.027
	4	53.230	53.230	53.230	53.230
	5	53.230	53.230	53.230	53.230
	6	53.027	53.027	53.027	53.027
	7	52.823	52.823	52.823	52.823
	8	52.620	52.620	52.620	52.620
PIER 42 SPAN BACK	1	55.814	55.814	55.814	55.814
	2	56.018	56.018	56.018	56.018
	3	56.221	56.221	56.221	56.221
	4	56.425	56.425	56.425	56.425
	5	56.425	56.425	56.425	56.425
	6	56.221	56.221	56.221	56.221
	7	56.018	56.018	56.018	56.018
	8	55.814	55.814	55.814	55.814
PIER 42 SPAN AHEAD	1	55.790	55.790	55.790	55.790
	2	55.994	55.994	55.994	55.994
	3	56.197	56.197	56.197	56.197
	4	56.400	56.400	56.400	56.400
	5	56.400	56.400	56.400	56.400
	6	56.197	56.197	56.197	56.197
	7	55.994	55.994	55.994	55.994
	8	55.790	55.790	55.790	55.790

HDR 6 MAY 96

FINLEY McNARY/JANSSEN SPAANS
a Joint Venture

Finley McNary Engineers, Inc
1391 Timberlane Road Suite 200
Tallahassee, Florida 32312-1721

Janssen & Spaans Engineers, Inc.
2825 East 56th Street
Indianapolis, Indiana 46220

REVISIONS

DATE	BY	DESCRIPTION	DATE	BY	DESCRIPTION	DATE	BY	DESCRIPTION	DATE	BY

	NAME	DATE
DR. BY	J.L.S.	1/96
CHK. BY	C.W.N.	1/96
SUPV.	H.D.R.	1/96

FINLEY McNARY/JANSSEN SPAANS

BOARD OF COUNTY COMMISSIONERS
LEE, COUNTY, FLORIDA
DEPARTMENT OF TRANSPORTATION

MIDPOINT BRIDGE
PEDESTAL ELEVATIONS (2)

PROJECT NO.	SHEET NO
5896	C-45A

BX1-55

SPAN	GIRDER	ELEVATION POINTS PT.a	PT.b	PT.c	PT.d
PIER 43 — SPAN BACK AND AHEAD	1	54.166	54.166	54.166	54.166
	2	54.369	54.369	54.369	54.369
	3	54.573	54.573	54.573	54.573
	4	54.776	54.776	54.776	54.776
	5	54.776	54.776	54.776	54.776
	6	54.573	54.573	54.573	54.573
	7	54.369	54.369	54.369	54.369
	8	54.166	54.166	54.166	54.166
PIER 44 — SPAN BACK AND AHEAD	1	54.219	54.219	54.219	54.219
	2	54.422	54.422	54.422	54.422
	3	54.626	54.626	54.626	54.626
	4	54.829	54.829	54.829	54.829
	5	54.829	54.829	54.829	54.829
	6	54.626	54.626	54.626	54.626
	7	54.422	54.422	54.422	54.422
	8	54.219	54.219	54.219	54.219
PIER 45 — SPAN BACK	1	55.928	55.928	55.928	55.928
	2	56.131	56.131	56.131	56.131
	3	56.334	56.334	56.334	56.334
	4	56.538	56.538	56.538	56.538
	5	56.538	56.538	56.538	56.538
	6	56.334	56.334	56.334	56.334
	7	56.131	56.131	56.131	56.131
	8	55.928	55.928	55.928	55.928
PIER 45 — SPAN AHEAD	1	55.952	55.952	55.952	55.952
	2	56.156	56.156	56.156	56.156
	3	56.359	56.359	56.359	56.359
	4	56.562	56.562	56.562	56.562
	5	56.562	56.562	56.562	56.562
	6	56.359	56.359	56.359	56.359
	7	56.156	56.156	56.156	56.156
	8	55.952	55.952	55.952	55.952

BEARING PEDESTAL POINT ELEVATIONS

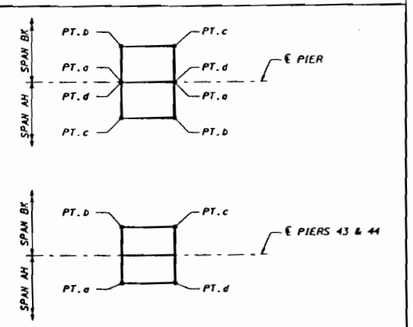

SPAN	GIRDER	ELEVATION POINTS PT.a	PT.b	PT.c	PT.d
PIER 46 — SPAN BACK	1	52.833	52.833	52.833	52.833
	2	53.036	53.036	53.036	53.036
	3	53.240	53.240	53.240	53.240
	4	53.443	53.443	53.443	53.443
	5	53.443	53.443	53.443	53.443
	6	53.240	53.240	53.240	53.240
	7	53.036	53.036	53.036	53.036
	8	52.833	52.833	52.833	52.833
PIER 46 — SPAN AHEAD	1	52.649	52.649	52.649	52.649
	2	52.853	52.853	52.853	52.853
	3	53.056	53.056	53.056	53.056
	4	53.259	53.259	53.259	53.259
	5	53.259	53.259	53.259	53.259
	6	53.056	53.056	53.056	53.056
	7	52.853	52.853	52.853	52.853
	8	52.649	52.649	52.649	52.649
PIER 47 — SPAN BACK	1	48.393	48.393	48.393	48.393
	2	48.596	48.596	48.596	48.596
	3	48.799	48.799	48.799	48.799
	4	49.003	49.003	49.003	49.003
	5	49.003	49.003	49.003	49.003
	6	48.799	48.799	48.799	48.799
	7	48.596	48.596	48.596	48.596
	8	48.393	48.393	48.393	48.393
PIER 47 — SPAN AHEAD	1	48.273	48.273	48.273	48.273
	2	48.477	48.477	48.477	48.477
	3	48.680	48.680	48.680	48.680
	4	48.883	48.883	48.883	48.883
	5	48.883	48.883	48.883	48.883
	6	48.680	48.680	48.680	48.680
	7	48.477	48.477	48.477	48.477
	8	48.273	48.273	48.273	48.273
PIER 48 — SPAN BACK	1	43.938	43.938	43.938	43.938
	2	44.142	44.142	44.142	44.142
	3	44.345	44.345	44.345	44.345
	4	44.548	44.548	44.548	44.548
	5	44.548	44.548	44.548	44.548
	6	44.345	44.345	44.345	44.345
	7	44.142	44.142	44.142	44.142
	8	43.938	43.938	43.938	43.938
PIER 48 — SPAN AHEAD	1	43.857	43.857	43.857	43.857
	2	44.060	44.060	44.060	44.060
	3	44.263	44.263	44.263	44.263
	4	44.467	44.467	44.467	44.467
	5	44.467	44.467	44.467	44.467
	6	44.263	44.263	44.263	44.263
	7	44.060	44.060	44.060	44.060
	8	43.857	43.857	43.857	43.857

SPAN	GIRDER	ELEVATION POINTS PT.a	PT.b	PT.c	PT.d
PIER 49 — SPAN BACK	1	39.474	39.474	39.474	39.474
	2	39.678	39.678	39.678	39.678
	3	39.881	39.881	39.881	39.881
	4	40.084	40.084	40.084	40.084
	5	40.084	40.084	40.084	40.084
	6	39.881	39.881	39.881	39.881
	7	39.678	39.678	39.678	39.678
	8	39.474	39.474	39.474	39.474
PIER 49 — SPAN AHEAD	1	39.393	39.393	39.393	39.393
	2	39.596	39.596	39.596	39.596
	3	39.799	39.799	39.799	39.799
	4	40.003	40.003	40.003	40.003
	5	40.003	40.003	40.003	40.003
	6	39.799	39.799	39.799	39.799
	7	39.596	39.596	39.596	39.596
	8	39.393	39.393	39.393	39.393
PIER 50 — SPAN BACK	1	35.104	35.104	35.104	35.104
	2	35.308	35.308	35.308	35.308
	3	35.511	35.511	35.511	35.511
	4	35.714	35.714	35.714	35.714
	5	35.714	35.714	35.714	35.714
	6	35.511	35.511	35.511	35.511
	7	35.308	35.308	35.308	35.308
	8	35.104	35.104	35.104	35.104
PIER 50 — SPAN AHEAD	1	35.023	35.023	35.023	35.023
	2	35.226	35.226	35.226	35.226
	3	35.429	35.429	35.429	35.429
	4	35.633	35.633	35.633	35.633
	5	35.633	35.633	35.633	35.633
	6	35.429	35.429	35.429	35.429
	7	35.226	35.226	35.226	35.226
	8	35.023	35.023	35.023	35.023
PIER 51 — SPAN BACK	1	30.687	30.687	30.687	30.687
	2	30.891	30.891	30.891	30.891
	3	31.094	31.094	31.094	31.094
	4	31.297	31.297	31.297	31.297
	5	31.297	31.297	31.297	31.297
	6	31.094	31.094	31.094	31.094
	7	30.891	30.891	30.891	30.891
	8	30.687	30.687	30.687	30.687
PIER 51 — SPAN AHEAD	1	30.606	30.606	30.606	30.606
	2	30.809	30.809	30.809	30.809
	3	31.013	31.013	31.013	31.013
	4	31.216	31.216	31.216	31.216
	5	31.216	31.216	31.216	31.216
	6	31.013	31.013	31.013	31.013
	7	30.809	30.809	30.809	30.809
	8	30.606	30.506	30.606	30.606

SPAN	GIRDER	ELEVATION POINTS PT.a	PT.b	PT.c	PT.d
PIER 52 — SPAN BACK	1	26.224	26.224	26.224	26.224
	2	26.427	26.427	26.427	26.427
	3	26.630	26.630	26.630	26.630
	4	26.834	26.834	26.834	26.834
	5	26.834	26.834	26.834	26.834
	6	26.630	26.630	26.630	26.630
	7	26.427	26.427	26.427	26.427
	8	26.224	26.224	26.224	26.224
PIER 52 — SPAN AHEAD	1	26.142	26.142	26.142	26.142
	2	26.345	26.345	26.345	26.345
	3	26.549	26.549	26.549	26.549
	4	26.752	26.752	26.752	26.752
	5	26.752	26.752	26.752	26.752
	6	26.549	26.549	26.549	26.549
	7	26.345	26.345	26.345	26.345
	8	26.142	26.142	26.142	26.142
PIER 53 — SPAN BACK	1	21.654	21.854	21.854	21.854
	2	22.057	22.057	22.057	22.057
	3	22.260	22.260	22.260	22.260
	4	22.464	22.464	22.464	22.464
	5	22.464	22.464	22.464	22.464
	6	22.260	22.260	22.260	22.260
	7	22.057	22.057	22.057	22.057
	8	21.854	21.854	21.854	21.854
PIER 53 — SPAN AHEAD	1	21.651	21.651	21.651	21.651
	2	21.855	21.855	21.855	21.855
	3	22.058	22.058	22.058	22.058
	4	22.261	22.261	22.261	22.261
	5	22.261	22.261	22.261	22.261
	6	22.058	22.058	22.058	22.058
	7	21.855	21.855	21.855	21.855
	8	21.651	21.651	21.651	21.651
PIER 54 — SPAN BACK	1	17.595	17.595	17.595	17.595
	2	17.798	17.798	17.798	17.798
	3	18.001	18.001	18.001	18.001
	4	18.205	18.205	18.205	18.205
	5	18.205	18.205	18.205	18.205
	6	18.001	18.001	18.001	18.001
	7	17.798	17.798	17.798	17.798
	8	17.595	17.595	17.595	17.595
PIER 54 — SPAN AHEAD	1	17.489	17.489	17.489	17.489
	2	17.693	17.693	17.693	17.693
	3	17.896	17.896	17.896	17.896
	4	18.099	18.099	18.099	18.099
	5	18.057	18.057	18.057	18.057
	6	17.796	17.796	17.796	17.796
	7	17.535	17.535	17.535	17.535
	8	17.274	17.274	17.274	17.274

HDR
6 MAY 96

FINLEY McNARY/JANSSEN SPAANS
a Joint Venture

Finley McNary Engineers, Inc
1391 Timberlane Road Suite 200
Tallahassee, Florida 32312 1721

Janssen & Spaans Engineers, Inc
2825 East 56th Street
Indianapolis, Indiana 46220

REVISIONS

DATE	BY	DESCRIPTION	DATE	BY	DESCRIPTION	DATE	BY	DESCRIPTION	DATE	BY

	NAME	DATE
DR. BY	J.L.S.	1/96
CHK. BY	C.W.N.	1/96
SUPV.	H.D.R.	1/96

FINLEY McNARY/JANSSEN SPAANS

BOARD OF COUNTY COMMISSIONERS
LEE, COUNTY, FLORIDA
DEPARTMENT OF TRANSPORTATION

MIDPOINT BRIDGE
PEDESTAL ELEVATIONS (3)

PROJECT NO	SHEET NO
5896	C-46A

BX1-56

SPAN	GIRDER	ELEVATION POINTS PT.a	PT.b	PT.c	PT.d
PIER 55 SPAN BACK	1	14.577	14.577	14.577	14.577
	2	14.781	14.781	14.781	14.781
	3	14.984	14.984	14.984	14.984
	4	15.187	15.187	15.187	15.187
	5	15.246	15.246	15.246	15.246
	6	15.122	15.122	15.122	15.122
	7	14.998	14.998	14.998	14.998
	8	14.874	14.874	14.874	14.874
PIER 55 SPAN AHEAD	1	16.598	16.566	16.566	16.598
	2	16.797	16.765	16.765	16.797
	3	16.982	16.950	16.950	16.982
	4	17.167	17.135	17.135	17.167
	5	17.330	17.298	17.298	17.330
	6	17.305	17.277	17.277	17.305
	7	17.246	17.222	17.222	17.246
	8	17.187	17.168	17.168	17.187
	9	17.115	17.099	17.099	17.115
PIER 56 SPAN BACK	1	15.372	15.397	15.397	15.372
	2	15.571	15.596	15.596	15.571
	3	15.756	15.781	15.781	15.756
	4	15.941	15.966	15.966	15.941
	5	16.104	16.129	16.129	16.104
	6	16.227	16.249	16.249	16.227
	7	16.319	16.338	16.338	16.319
	8	16.412	16.427	16.427	16.412
	9	16.490	16.503	16.503	16.490
PIER 56 SPAN AHEAD	1	15.488	15.469	15.469	15.488
	2	15.658	15.640	15.640	15.658
	3	15.814	15.798	15.798	15.814
	4	15.970	15.955	15.955	15.970
	5	16.104	16.090	16.090	16.104
	6	16.227	16.216	16.216	16.227
	7	16.320	16.312	16.312	16.320
	8	16.412	16.408	16.408	16.412
	9	16.491	16.489	16.489	16.491
PIER 57 SPAN BACK	1	14.588	14.607	14.607	14.588
	2	14.816	14.834	14.834	14.816
	3	15.030	15.047	15.047	15.030
	4	15.244	15.260	15.260	15.244
	5	15.436	15.450	15.450	15.436
	6	15.702	15.713	15.713	15.702
	7	15.945	15.953	15.953	15.945
	8	16.188	16.193	16.193	16.188
	9	16.417	16.419	16.419	16.417
PIER 57 SPAN AHEAD	1	14.480	14.464	14.464	14.480
	2	14.737	14.724	14.724	14.737
	3	14.980	14.970	14.970	14.980
	4	15.223	15.217	15.217	15.223
	5	15.444	15.441	15.441	15.444
	6	15.709	15.709	15.709	15.709
	7	15.952	15.955	15.955	15.952
	8	16.196	16.202	16.202	16.196
	9	16.425	16.434	16.434	16.425

BEARING PEDESTAL POINT ELEVATIONS

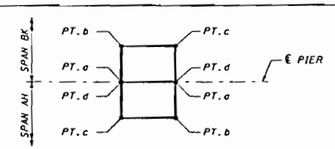

SPAN	GIRDER	ELEVATION POINTS PT.a	PT.b	PT.c	PT.d
PIER 58 SPAN BACK	1	13.716	13.733	13.733	13.717
	2	14.124	14.137	14.137	14.124
	3	14.517	14.527	14.527	14.517
	4	14.910	14.917	14.917	14.910
	5	15.281	15.284	15.284	15.281
	6	15.696	15.696	15.696	15.696
	7	16.089	16.086	16.086	16.089
	8	16.482	16.476	16.476	16.482
	9	16.862	16.852	16.852	16.862
PIER 58 SPAN AHEAD	1	13.793	13.780	13.781	13.793
	2	14.140	14.130	14.131	14.140
	3	14.537	14.531	14.531	14.537
	4	14.935	14.931	14.931	14.935
	5	15.310	15.309	15.309	15.310
	6	15.716	15.719	15.719	15.716
	7	16.114	16.120	16.119	16.114
	8	16.519	16.527	16.527	16.518
	9	16.909	16.921	16.921	16.909
PIER 59 SPAN BACK	1	13.206	13.219	13.220	13.207
	2	13.697	13.706	13.707	13.697
	3	14.237	14.244	14.244	14.238
	4	14.778	14.782	14.782	14.778
	5	15.297	15.297	15.297	15.297
	6	15.847	15.844	15.844	15.847
	7	16.388	16.382	16.382	16.388
	8	16.936	16.927	16.927	16.935
	9	17.470	17.458	17.458	17.469
PIER 59 SPAN AHEAD	1	13.216	13.216	13.216	13.216
	2	13.703	13.703	13.703	13.703
	3	14.240	14.240	14.240	14.240
	4	14.777	14.777	14.777	14.777
	5	15.292	15.292	15.292	15.292
	6	15.839	15.839	15.839	15.839
	7	16.377	16.377	16.377	16.377
	8	16.921	16.921	16.921	16.921
	9	17.452	17.452	17.452	17.452
PIERS 60 THRU 61 SPAN BACK	1	13.216	13.216	13.216	13.216
	2	13.703	13.703	13.703	13.703
	3	14.240	14.240	14.240	14.240
	4	14.777	14.777	14.777	14.777
	5	15.292	15.292	15.292	15.292
	6	15.839	15.839	15.839	15.839
	7	16.377	16.377	16.377	16.377
	8	16.921	16.921	16.921	16.921
	9	17.452	17.452	17.452	17.452
PIERS 60 THRU 61 SPAN AHEAD	1	13.216	13.216	13.216	13.216
	2	13.703	13.703	13.703	13.703
	3	14.240	14.240	14.240	14.240
	4	14.777	14.777	14.777	14.777
	5	15.292	15.292	15.292	15.292
	6	15.839	15.839	15.839	15.839
	7	16.377	16.377	16.377	16.377
	8	16.921	16.921	16.921	16.921
	9	17.452	17.452	17.452	17.452

SPAN	GIRDER	ELEVATION POINTS PT.a	PT.b	PT.c	PT.d
PIER 62 SPAN BACK	1	13.216	13.216	13.216	13.216
	2	13.703	13.703	13.703	13.703
	3	14.240	14.240	14.240	14.240
	4	14.777	14.777	14.777	14.777
	5	15.292	15.292	15.292	15.292
	6	15.839	15.839	15.839	15.839
	7	16.377	16.377	16.377	16.377
	8	16.921	16.921	16.921	16.921
	9	17.452	17.452	17.452	17.452
PIER 62 SPAN AHEAD	1	13.223	13.223	13.223	13.223
	2	13.710	13.710	13.710	13.710
	3	14.247	14.247	14.247	14.247
	4	14.785	14.784	14.784	14.785
	5	15.300	15.299	15.299	15.300
	6	15.847	15.846	15.846	15.847
	7	16.384	16.384	16.384	16.384
	8	16.929	16.928	16.928	16.929
	9	17.459	17.459	17.459	17.459
PIER 63 SPAN BACK	1	13.209	13.209	13.209	13.209
	2	13.696	13.696	13.696	13.696
	3	14.233	14.233	14.233	14.233
	4	14.770	14.770	14.770	14.770
	5	15.285	15.286	15.286	15.285
	6	15.832	15.832	15.832	15.832
	7	16.369	16.370	16.370	16.369
	8	16.914	16.914	16.914	16.914
	9	17.445	17.445	17.445	17.445
PIER 63 SPAN AHEAD	1	13.201	13.195	13.195	13.201
	2	13.688	13.682	13.682	13.688
	3	14.225	14.219	14.219	14.225
	4	14.763	14.757	14.757	14.763
	5	15.278	15.272	15.272	15.278
	6	15.825	15.819	15.819	15.825
	7	16.362	16.356	16.356	16.362
	8	16.907	16.901	16.901	16.907
	9	17.437	17.432	17.432	17.438

HDR 6 MAY 96

FINLEY McNARY/JANSSEN SPAANS
a Joint Venture

Finley McNary Engineers, Inc
1391 Timberlane Road Suite 200
Tallahassee, Florida 32312-1721

Janssen & Spaans Engineers, Inc.
2825 East 56th Street
Indianapolis, Indiana 46220

REVISIONS

DATE	BY	DESCRIPTION	DATE	BY	DESCRIPTION	DATE	BY	DESCRIPTION	DATE	BY	

	NAME	DATE
DR. BY	J.L.S.	5/96
CHK. BY	C.H.N.	5/96
SUPV.	H.D.R.	5/96

FINLEY McNARY/JANSSEN SPAANS

BOARD OF COUNTY COMMISSIONERS
LEE, COUNTY, FLORIDA
DEPARTMENT OF TRANSPORTATION

MIDPOINT BRIDGE
PEDESTAL ELEVATIONS (4)

26

PROJECT NO	SHEET NO
5896	C-47

BX1-57

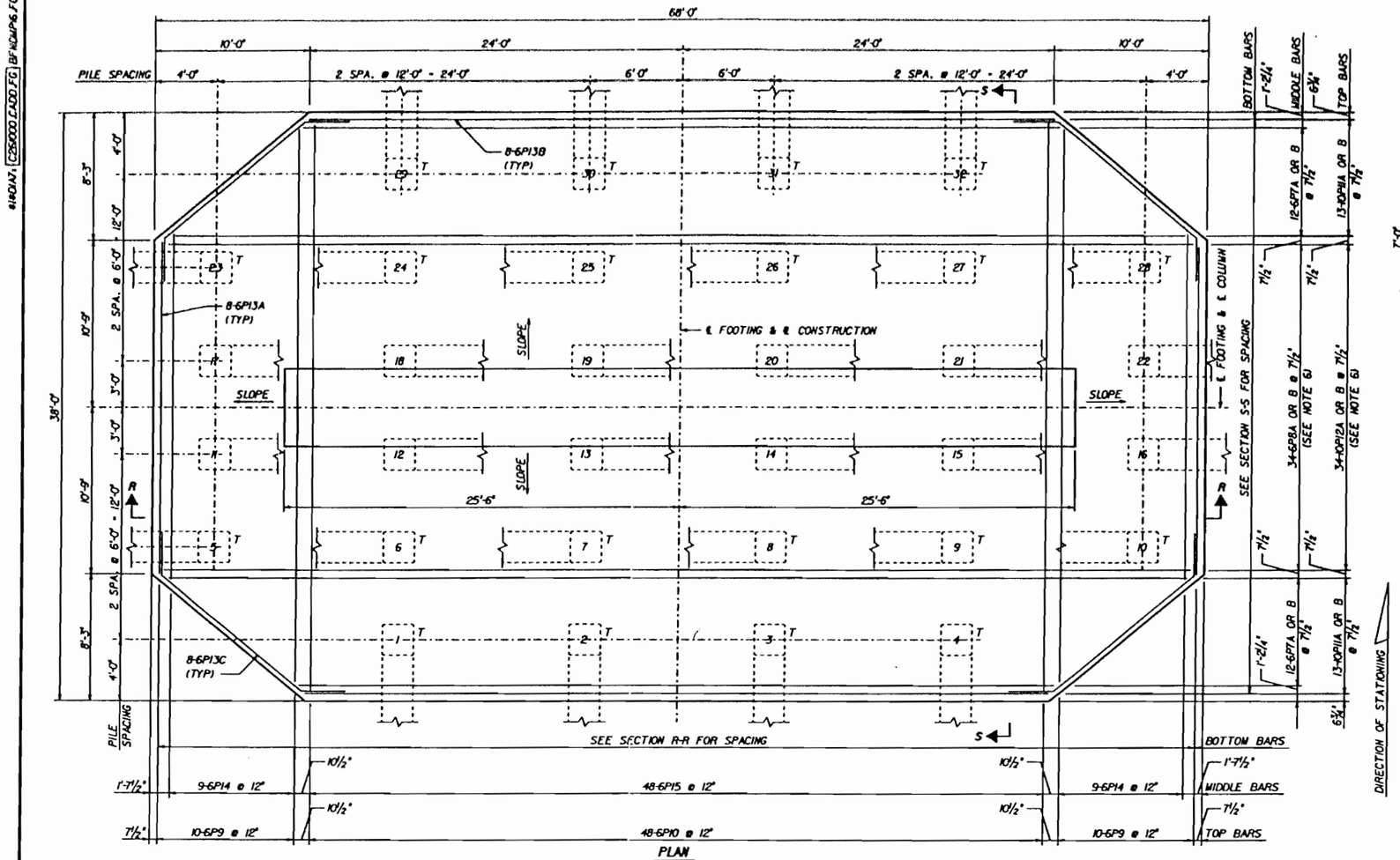

PLAN

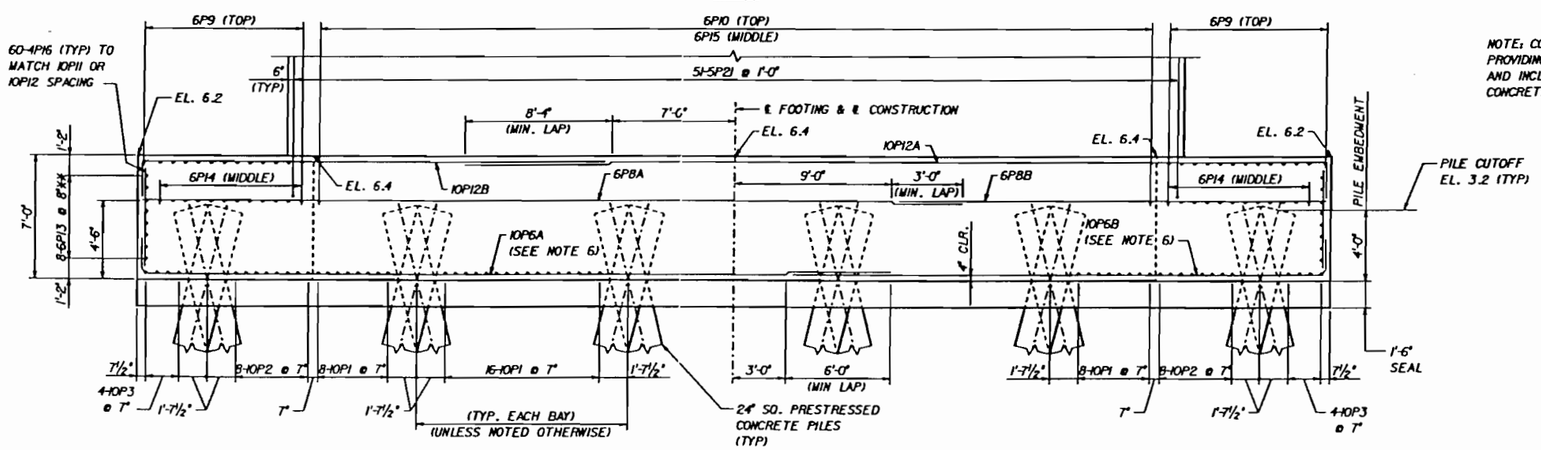

SECTION R-R

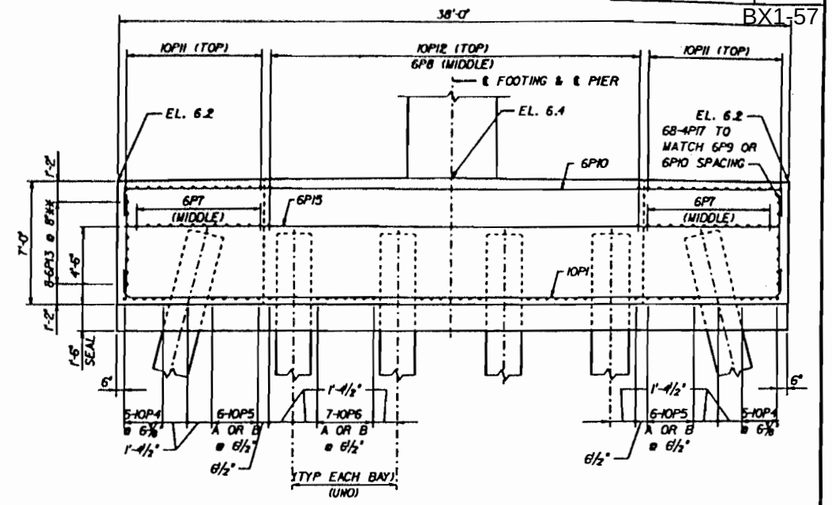

SECTION S-S

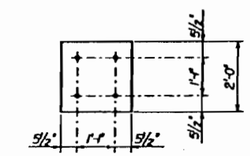

SECTION X-X

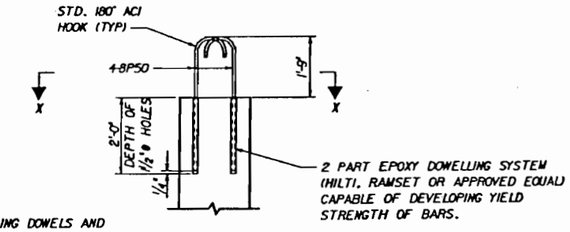

ELEVATION
TENSION PILE CONNECTION

NOTE: COST OF DRILLING HOLES, INSTALLING DOWELS AND PROVIDING EPOXY SHALL BE CONSIDERED INCIDENTAL WORK AND INCLUDED IN THE CONTRACTORS BID PRICE FOR CLASS IV CONCRETE (SUBSTRUCTURE).

NOTES

1. DIMENSIONS FOR PILE LAYOUT ARE MEASURED AT BOTTOM OF FOOTING.
2. ALL PILES BATTERED 3" PER FOOT IN DIRECTION INDICATED.
3. TOP AND MIDDLE BARS MAY BE SHIFTED LATERALLY (±) 2" TO ALLOW FOR COLUMN REINFORCEMENT.
4. ** INDICATES BARS SHALL FORM A CONTINUOUS BAND AROUND FOOTING PERIMETER.
5. ALL REINFORCING STEEL SHALL HAVE 4" CLEAR COVER UNLESS NOTED OTHERWISE.
6. LAP SPLICES FOR (10P5,10P6,6P7,6P8,10P11 & 10P12) A OR B SHALL ALTERNATE ABOUT THE ℄ CONSTRUCTION.
7. SEAL DESIGNED FOR WATER AT NORMAL HIGH WATER EL. 1.1 IF WATER ELEVATION VARIES FROM EL. 1.1 DURING CONSTRUCTION THE CONTRACTOR SHALL EMPLOY AN ENGINEER TO DESIGN BOTH THE SEAL AND COFFERDAM AS PER SPECIFICATION 455-3.2.4.
8. FOR SEAL CONCRETE NOTES SEE SHEET NO. C-1.
9. "T" INDICATES TENSION PILE CONNECTION IS REQUIRED. FOR DETAILS. SEE THIS SHEET.
10. ORIENT COLUMN DOWELS TO AVOID CONFLICT WITH THE PILES.

3/31/95

REVISIONS											
DATE	BY	DESCRIPTION	DATE	BY	DESCRIPTION	DATE	BY	DESCRIPTION	DATE	BY	DESCRIPTION

	NAME	DATE
DR. BY	MDD	6/94
CHK. BY	MH	6/94
SUPV.	MCM	7/94

Greiner Engineers, Inc. Tampa, Florida

Engineers, Architects and Planners

BOARD OF COUNTY COMMISSIONERS
LEE COUNTY, FLORIDA
DEPARTMENT OF TRANSPORTATION

MIDPOINT BRIDGE
FOOTING DETAILS
PIERS 32 AND 55

FRLEECTY

PLOTTED: 12/NOV/96 10:35:44 PDT

PROJECT NO	SHEET NO
5896	C-18

BX1-58

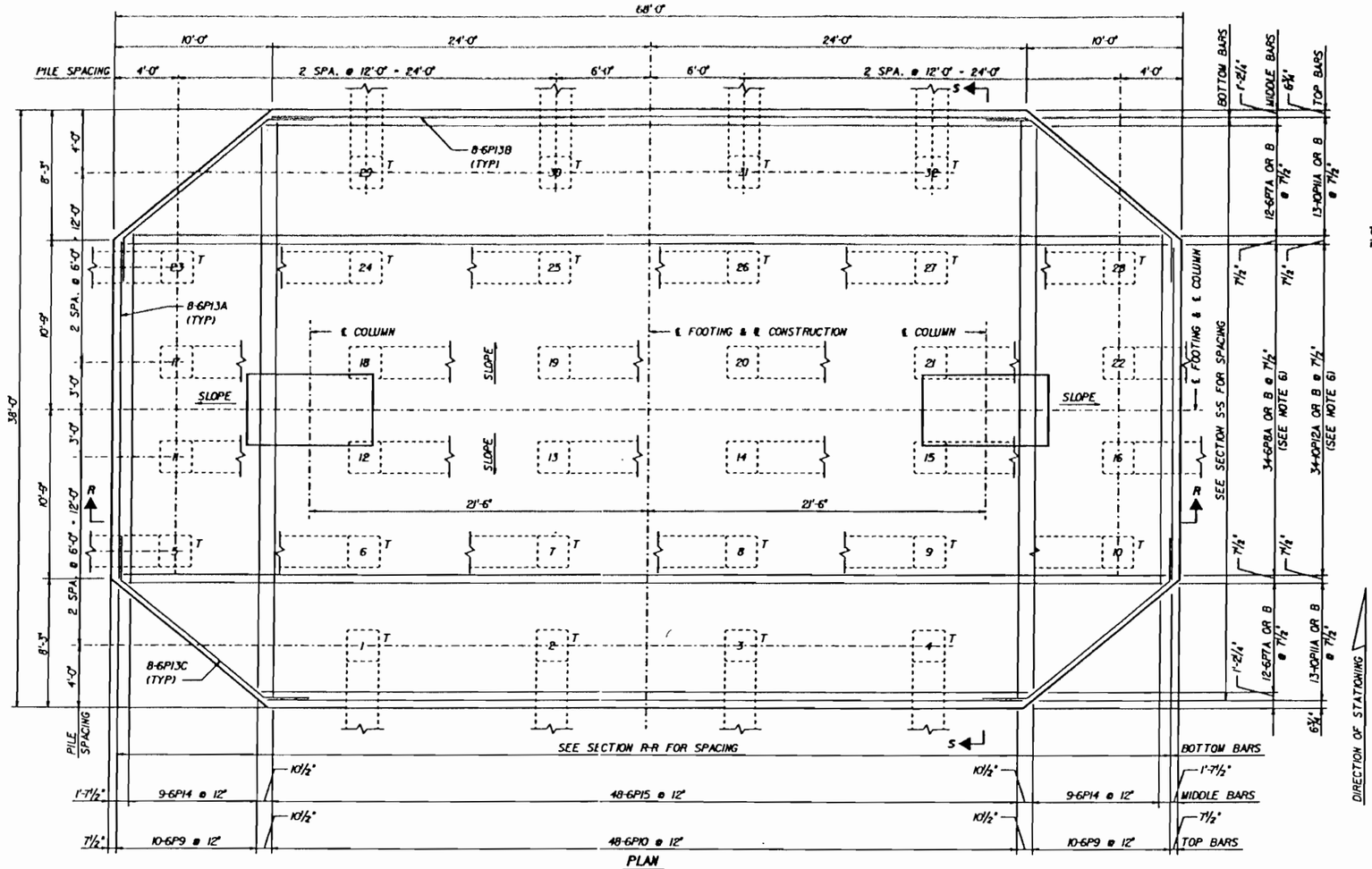

PLAN

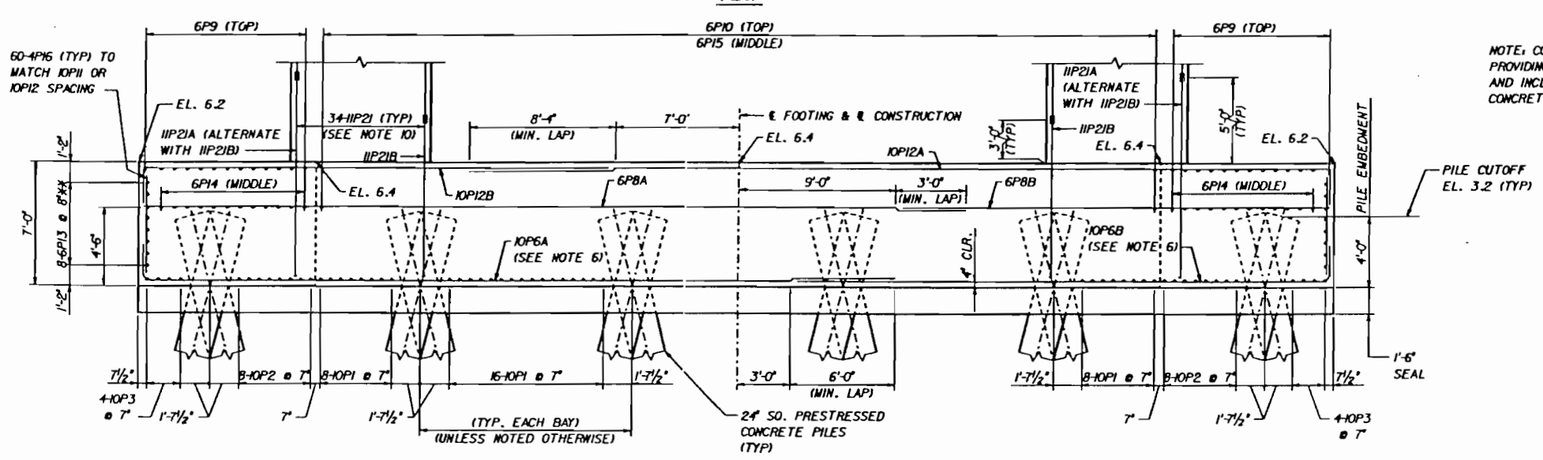

SECTION R-R

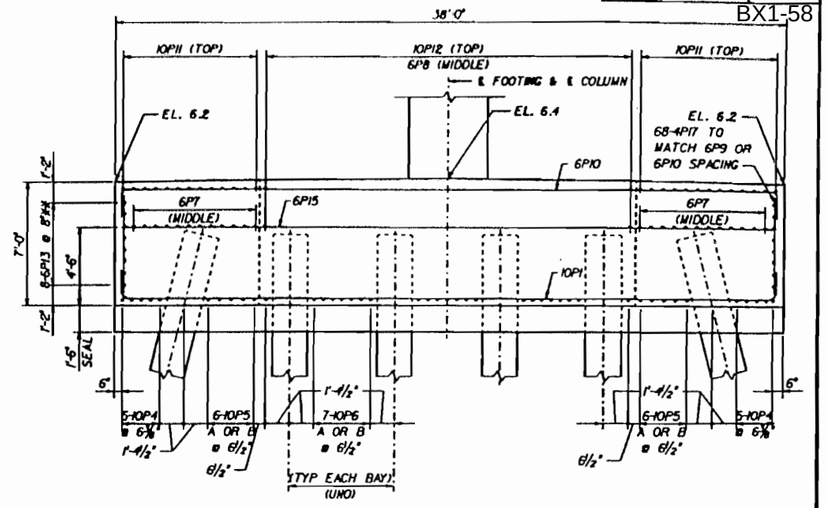

SECTION S-S

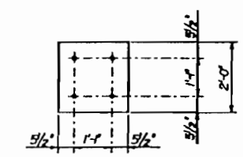

SECTION X-X

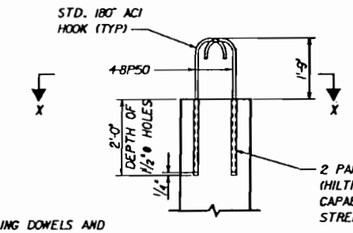

ELEVATION
TENSION PILE CONNECTION

NOTE: COST OF DRILLING HOLES, INSTALLING DOWELS AND PROVIDING EPOXY SHALL BE CONSIDERED INCIDENTAL WORK AND INCLUDED IN THE CONTRACTORS BID PRICE FOR CLASS IV CONCRETE (SUBSTRUCTURE).

NOTES

1. DIMENSIONS FOR PILE LAYOUT ARE MEASURED AT BOTTOM OF FOOTING.
2. ALL PILES BATTERED 3" PER FOOT IN DIRECTION INDICATED.
3. TOP AND MIDDLE BARS MAY BE SHIFTED LATERALLY ⊕ 2" TO ALLOW FOR COLUMN REINFORCEMENT.
4. ** INDICATES BARS SHALL FORM A CONTINUOUS BAND AROUND FOOTING PERIMETER.
5. ALL REINFORCING STEEL SHALL HAVE 4" CLEAR COVER UNLESS NOTED OTHERWISE.
6. LAP SPLICES FOR (10P5,10P6,6P7,6P8,10P11 & 10P12) A OR B SHALL ALTERNATE ABOUT THE ℄ CONSTRUCTION.
7. SEAL DESIGNED FOR WATER AT NORMAL HIGH WATER EL. 1.1 IF WATER ELEVATION VARIES FROM EL. 1.1 DURING CONSTRUCTION THE CONTRACTOR SHALL EMPLOY AN ENGINEER TO DESIGN BOTH THE SEAL AND COFFERDAM AS PER SPECIFICATION 455-3.2.4.
8. FOR SEAL CONCRETE NOTES SEE SHEET NO. C-1.
9. "T" INDICATES TENSION PILE CONNECTION IS REQUIRED. FOR DETAILS. SEE THIS SHEET
10. ORIENT COLUMN DOWELS TO AVOID CONFLICT WITH THE PILES.

3/3/95

REVISIONS

DATE	BY	DESCRIPTION	DATE	BY	DESCRIPTION	DATE	BY	DESCRIPTION	DATE	BY	DESCRIPTION

	NAME	DATE
DR. BY	MDD	6/94
CHK. BY	MH	6/94
SUPV.	MCM	7/94

Greiner Engineering, Inc. Tampa, Florida — Engineers, Architects and Planners

BOARD OF COUNTY COMMISSIONERS
LEE COUNTY, FLORIDA
DEPARTMENT OF TRANSPORTATION

MIDPOINT BRIDGE
FOOTING DETAILS
PIERS 33 THRU 36 AND 51 THRU 54

FRLEECTY

PROJECT NO	SHEET NO
5896	C-19

BX1-59

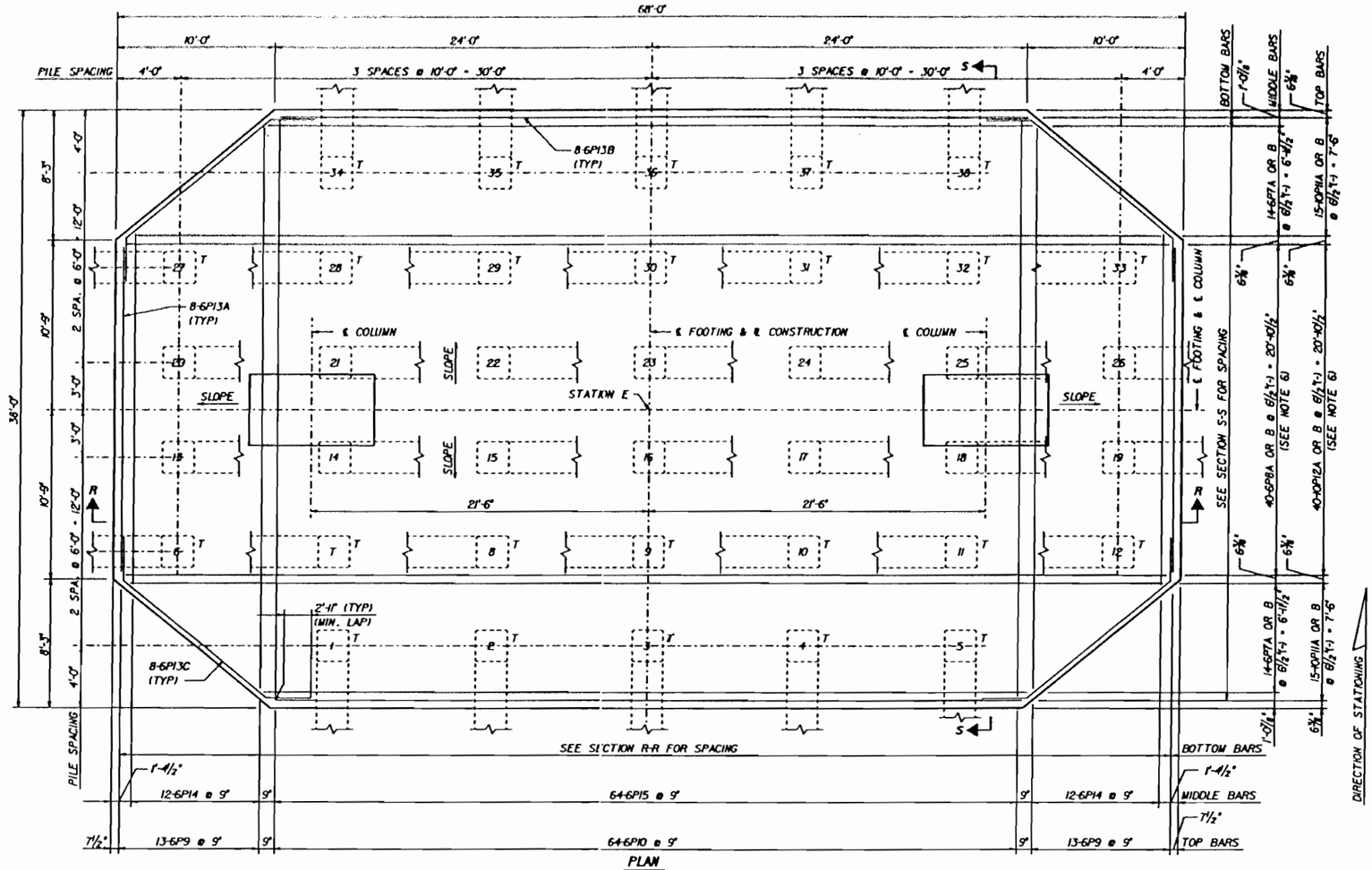

PLAN

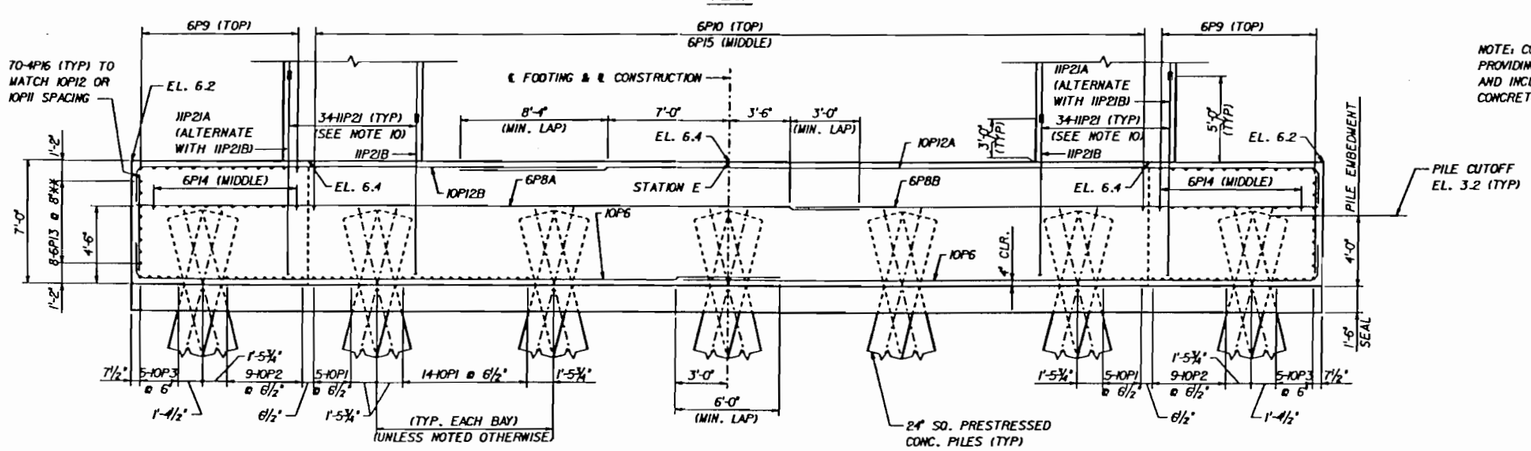

SECTION R-R

PIER	37	38	39	40	47	48	49	50
STATION E	2150+62.25	2152+07.00	2153+51.75	2154+96.50	2165+95.50	2167+40.25	2168+85.00	2170+29.75

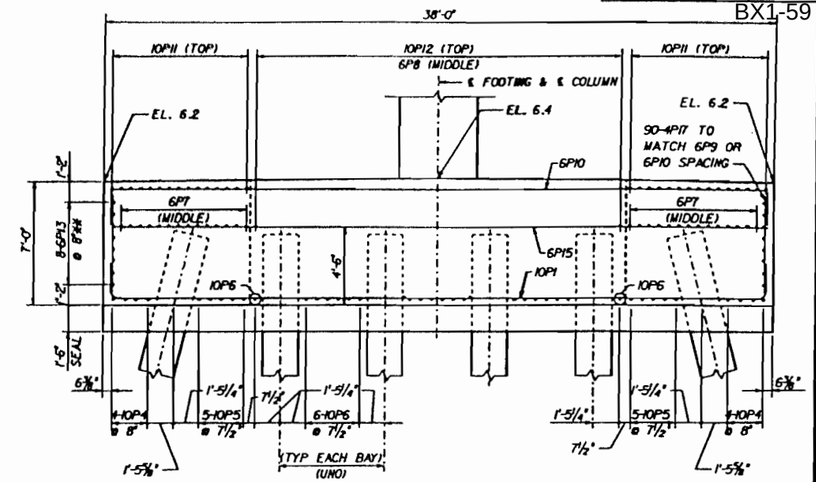

SECTION S-S

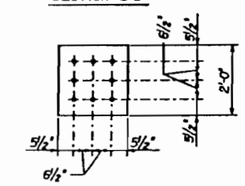

SECTION X-X

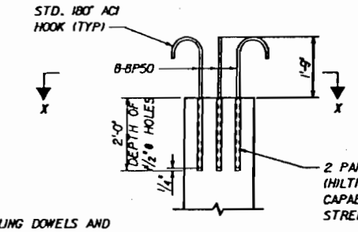

ELEVATION
TENSION PILE CONNECTION

NOTE: COST OF DRILLING HOLES, INSTALLING DOWELS AND PROVIDING EPOXY SHALL BE CONSIDERED INCIDENTAL WORK AND INCLUDED IN THE CONTRACTORS BID PRICE FOR CLASS IV CONCRETE (SUBSTRUCTURE).

NOTES

1. DIMENSIONS FOR PILE LAYOUT ARE MEASURED AT BOTTOM OF FOOTING.
2. ALL PILES BATTERED 3" PER FOOT IN DIRECTION INDICATED.
3. TOP AND MIDDLE BARS MAY BE SHIFTED LATERALLY ±2" TO ALLOW FOR COLUMN REINFORCEMENT.
4. KK INDICATES BARS SHALL FORM A CONTINUOUS BAND AROUND FOOTING PERIMETER.
5. ALL REINFORCING STEEL SHALL HAVE 4" CLEAR COVER UNLESS NOTED OTHERWISE.
6. LAP SPLICES FOR (10P5,6P7,6P8,10P11,10P12) A OR B SHALL ALTERNATE ABOUT THE ℄ FOOTING.
7. SEAL DESIGNED FOR WATER AT NORMAL HIGH WATER EL. 1) IF WATER ELEVATION VARIES FROM EL. 1) DURING CONSTRUCTION THE CONTRACTOR SHALL EMPLOY AN ENGINEER TO DESIGN BOTH THE SEAL AND COFFERDAM AS PER SPECIFICATION 455-3.2.4.
8. FOR SEAL CONCRETE NOTES SEE SHEET NO. C-1.
9. "T" INDICATES TENSION PILE CONNECTION IS REQUIRED. FOR DETAILS, SEE THIS SHEET
10. ORIENT COLUMN DOWELS TO AVOID CONFLICT WITH THE PILES.

3/31/95

REVISIONS

DATE	BY	DESCRIPTION	DATE	BY	DESCRIPTION	DATE	BY	DESCRIPTION	DATE	BY	DESCRIPTION

	NAME	DATE
DR. BY	MDD	6/94
CHK. BY	MH	6/94
SUPV.	MCM	6/94

Greiner
Greiner, Inc.
Tampa, Florida

Engineers, Architects and Planners

BOARD OF COUNTY COMMISSIONERS
LEE COUNTY, FLORIDA
DEPARTMENT OF TRANSPORTATION

MIDPOINT BRIDGE
FOOTING DETAILS
PIERS 37 THRU 40 AND 47 THRU 50

FILEECTY

PLOTTED: 27JAN95-08:38:40

PROJECT NO	SHEET NO
5896	C-50

BX1-60

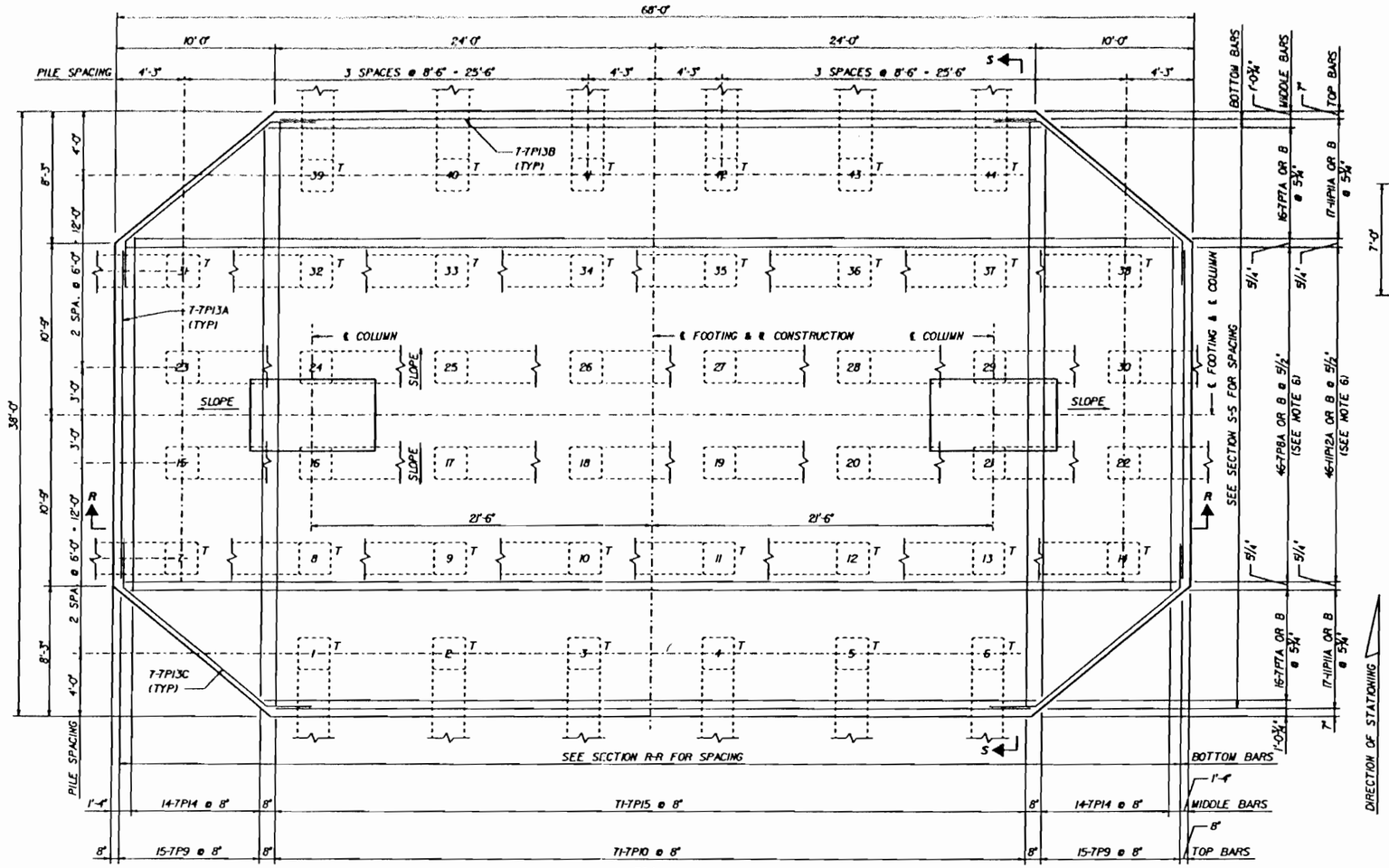

PLAN

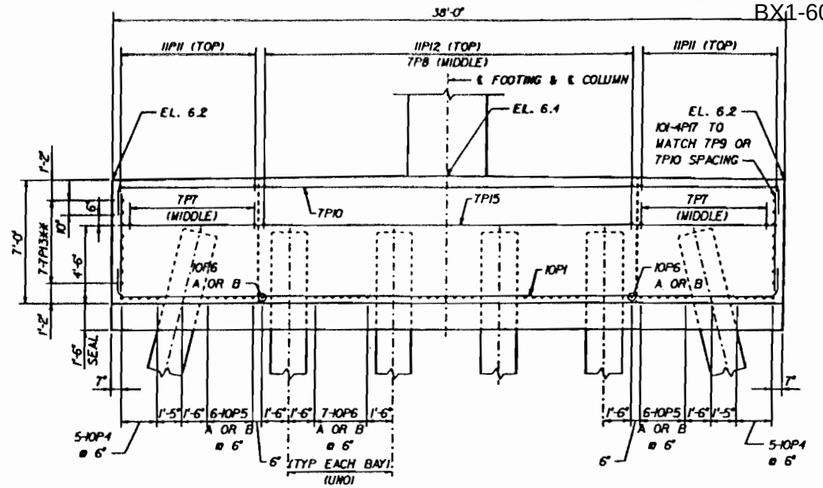

SECTION S-S

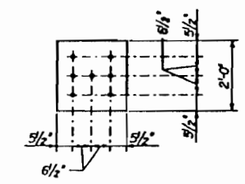

SECTION X-X

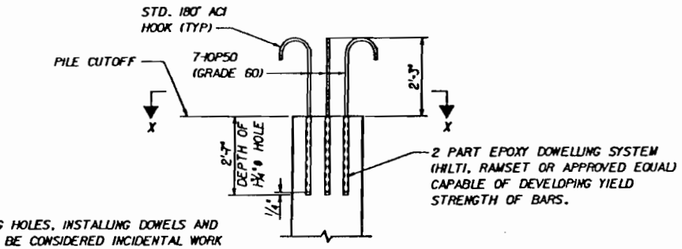

ELEVATION
TENSION PILE CONNECTION

NOTE: COST OF DRILLING HOLES, INSTALLING DOWELS AND PROVIDING EPOXY SHALL BE CONSIDERED INCIDENTAL WORK AND INCLUDED IN THE CONTRACTORS BID PRICE FOR CLASS IV CONCRETE (SUBSTRUCTURE).

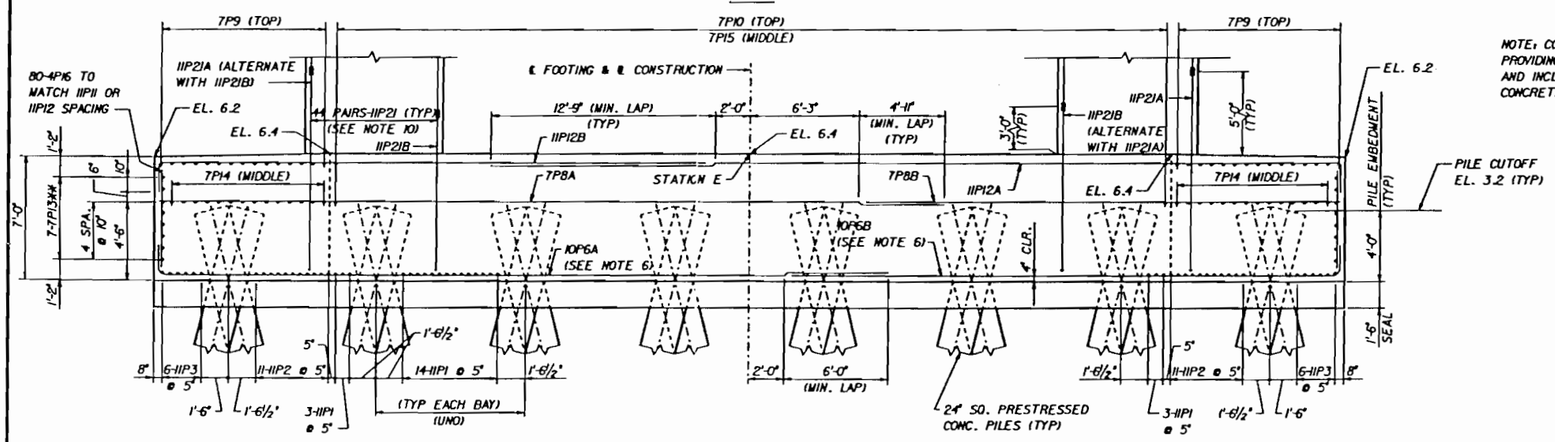

SECTION R-R

NOTES

1. DIMENSIONS FOR PILE LAYOUT ARE MEASURED AT BOTTOM OF FOOTING.
2. ALL PILES BATTERED 3" PER FOOT IN DIRECTION INDICATED.
3. TOP AND MIDDLE BARS MAY BE SHIFTED LATERALLY ⊕ 2" TO ALLOW FOR COLUMN REINFORCEMENT.
4. ## INDICATES BARS SHALL FORM A CONTINUOUS BAND AROUND FOOTING PERIMETER.
5. ALL REINFORCING STEEL SHALL HAVE 4" CLEAR COVER UNLESS NOTED OTHERWISE.
6. LAP SPLICES FOR (10P5,10P6,7P7,7P8,11P11 AND 11P12) A OR B SHALL ALTERNATE ABOUT THE ℄ CONSTRUCTION.
7. SEAL DESIGNED FOR WATER AT NORMAL HIGH WATER EL. 1.1 IF WATER ELEVATION VARIES FROM EL. 1.1 DURING CONSTRUCTION THE CONTRACTOR SHALL EMPLOY AN ENGINEER TO DESIGN BOTH THE SEAL AND COFFERDAM AS PER SPECIFICATION 455-3.2.4.
8. FOR SEAL CONCRETE NOTES SEE SHEET NO. C-1.
9. "T" INDICATES TENSION PILE CONNECTION IS REQUIRED. FOR DETAIL, SEE THIS SHEET
10. ORIENT COLUMN DOWELS TO AVOID CONFLICT WITH THE PILES.

3/3/95

REVISIONS											
DATE	BY	DESCRIPTION	DATE	BY	DESCRIPTION	DATE	BY	DESCRIPTION	DATE	BY	DESCRIPTION

	NAME	DATE
DR. BY	MDD	6/94
CHK. BY	MH	6/94
SUPV.	MCM	6/94

Greiner
Greiner, Inc.
Tampa, Florida

Engineers, Architects and Planners

BOARD OF COUNTY COMMISSIONERS
LEE COUNTY, FLORIDA
DEPARTMENT OF TRANSPORTATION

MIDPOINT BRIDGE
FOOTING DETAILS
PIERS 41 THRU 46

FRLEECTY

PLOTTED: 27JAN95-08.42.00

PROJECT NO.	SHEET NO.
5896	C-5J

BX1-61

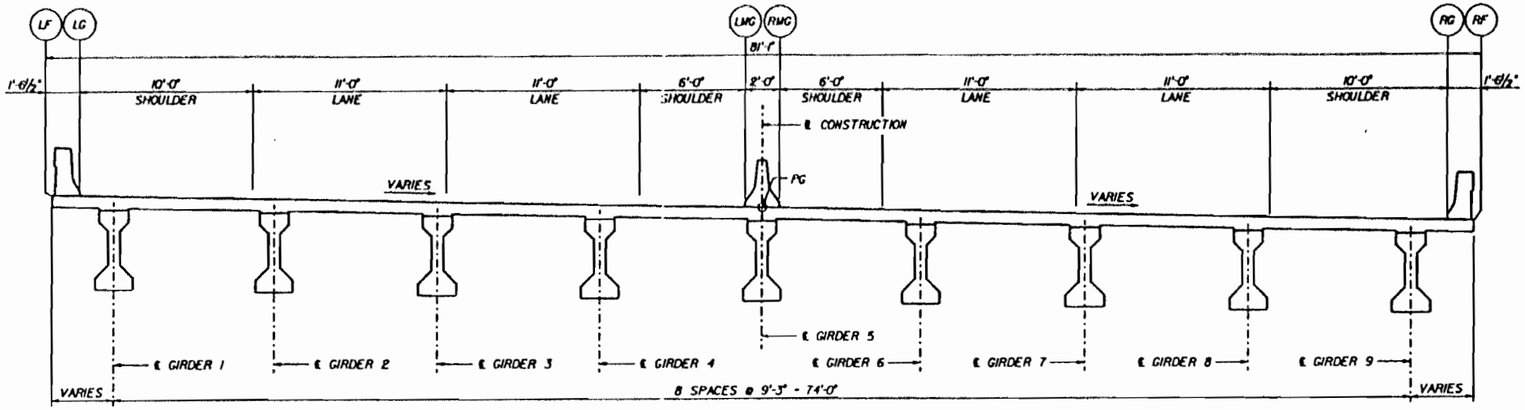

TYPICAL SECTION THRU SLAB

NOTES

LF - DENOTES LEFT FASCIA
LG - DENOTES LEFT GUTTER
LMG - DENOTES LEFT MEDIAN GUTTER
PG - DENOTES PROFILE GRADE
RG - DENOTES RIGHT GUTTER
RF - DENOTES RIGHT FASCIA
RMG - DENOTES RIGHT MEDIAN GUTTER

INCR. DIST.: THE DISTANCE ALONG FASCIA LINES, GUTTER LINES, PROFILE GRADE LINE AND GIRDER CENTERLINES BETWEEN POINTS.

POINTS: POINT "0" IS LOCATED AT FFBW OR ℄ OF PIER AT THE BEGINNING OF THE SPAN AND THE LAST POINT IS AT THE FFBW OR ℄ OF PIER AT THE END OF THE SPAN.

ELEVATIONS: ELEVATIONS GIVEN ARE TOP OF SLAB ELEVATIONS AT FASCIA LINES, GUTTER LINES, PROFILE GRADE LINE AND OVER GIRDER CENTERLINES.

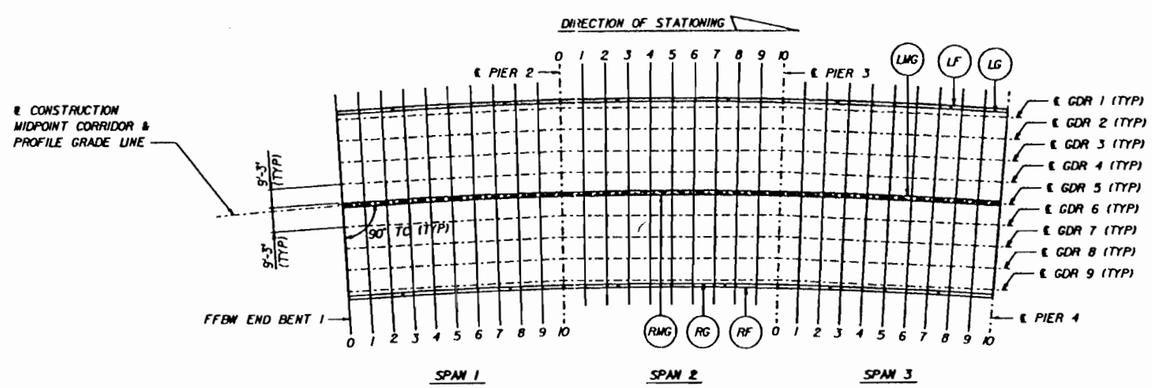

PLAN - UNIT A
UNIT A - SPANS 1 THRU 3

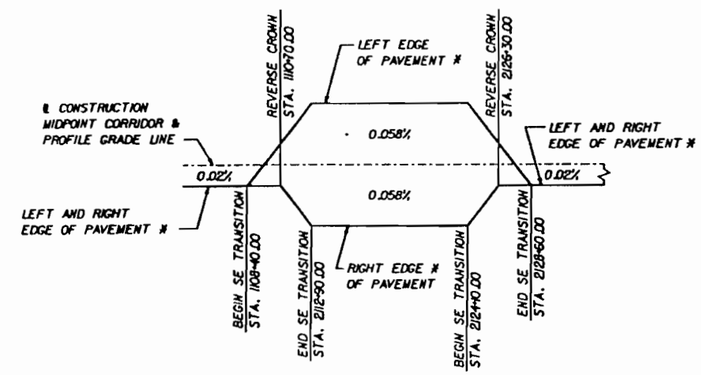

SUPERELEVATION TRANSITION DIAGRAM

* PAVEMENT ON THE BRIDGE REFERS TO THE DECK FASCIA ON THE BRIDGE.

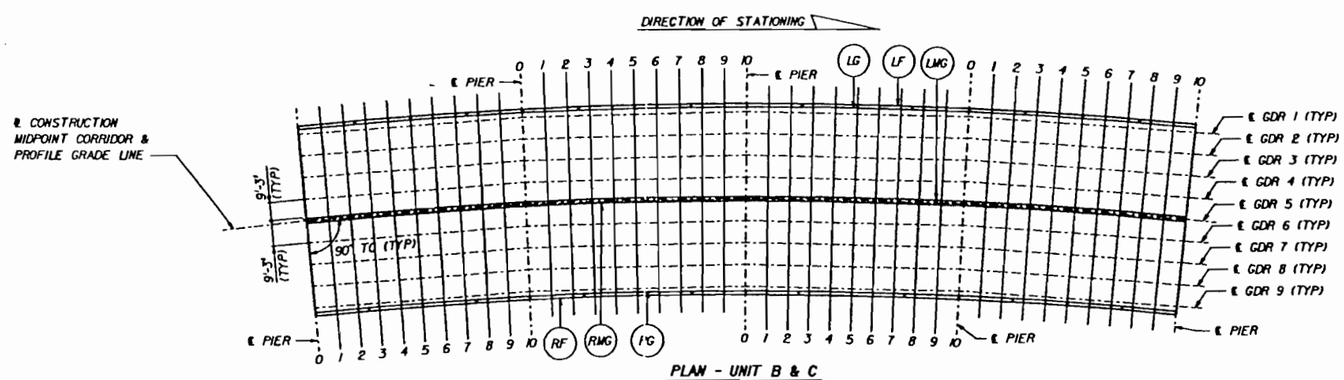

PLAN - UNIT B & C
UNIT B - SPANS 4 THRU 7
UNIT C - SPANS 8 THRU 11

TABLE OF SUBSTRUCTURE STATIONS

ELEMENT	FFBW END BENT 1	℄ PIER 2	℄ PIER 3	℄ PIER 4	℄ PIER 5	℄ PIER 6	℄ PIER 7	℄ PIER 8	℄ PIER 9	℄ PIER 10	℄ PIER 11	℄ PIER 12
STATION	2114+27.08	2115+21.00	2116+14.92	2117+08.83	2118+02.75	2118+96.67	2119+90.58	2120+84.50	2121+78.42	2122+72.33	2123+66.25	2124+60.17

3/3/93

REVISIONS											
DATE	BY	DESCRIPTION	DATE	BY	DESCRIPTION	DATE	BY	DESCRIPTION	DATE	BY	DESCRIPTION

	NAME	DATE
DR. BY	MDD	4/93
CHK. BY	MCM	4/93
SUPV.	REJ	7/93

Greiner, Inc.
Tampa, Florida

Engineers, Architects and Planners

BOARD OF COUNTY COMMISSIONERS
LEE COUNTY, FLORIDA
DEPARTMENT OF TRANSPORTATION

MIDPOINT BRIDGE
FINISH GRADE ELEVATIONS (1)

DISK#DRAW: C25000.DADD.FG BOKE WP02.FGBW

FILECITY

PLOTTED: 27JAN95-09:52:00

PROJECT NO.	SHEET NO
5896	C-52

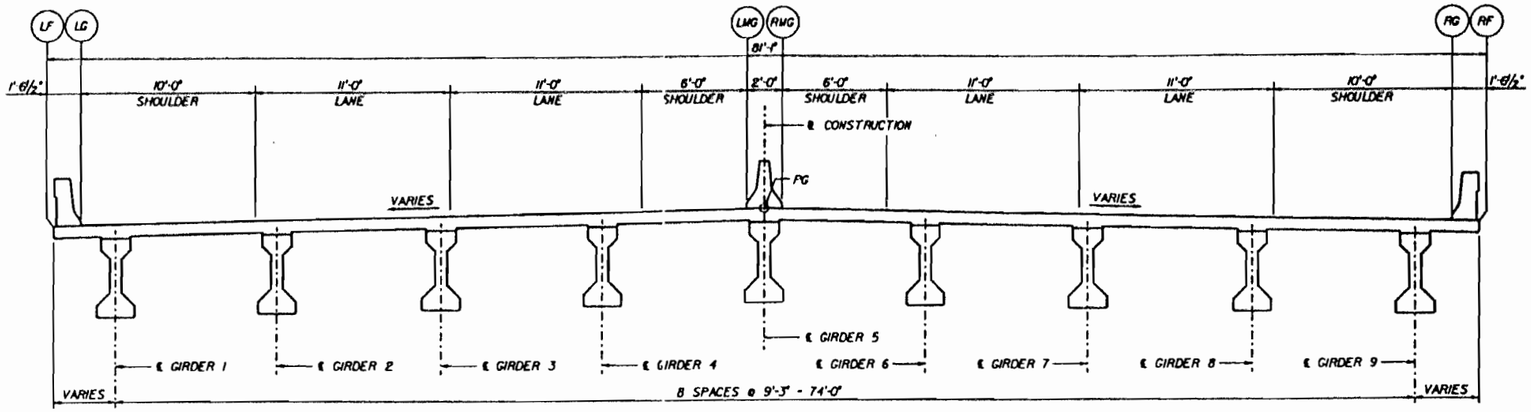

TYPICAL SECTION THRU SLAB

NOTES

LF - DENOTES LEFT FASCIA
LG - DENOTES LEFT GUTTER
LMG - DENOTES LEFT MEDIAN GUTTER
PG - DENOTES PROFILE GRADE
RG - DENOTES RIGHT GUTTER
RF - DENOTES RIGHT FASCIA
RMG - DENOTES RIGHT MEDIAN GUTTER

INCR. DIST. THE DISTANCE ALONG FASCIA LINES, GUTTER LINES, PROFILE GRADE LINE AND GIRDER CENTERLINES BETWEEN POINTS.

POINTS. POINT "0" IS LOCATED AT ℄ OF PIER AT THE BEGINNING OF THE SPAN AND THE LAST POINT IS AT THE ℄ OF PIER AT THE END OF THE SPAN.

ELEVATIONS. ELEVATIONS GIVEN ARE TOP OF SLAB ELEVATIONS AT FASCIA LINES, GUTTER LINES, PROFILE GRADE LINE AND OVER GIRDER CENTERLINES.

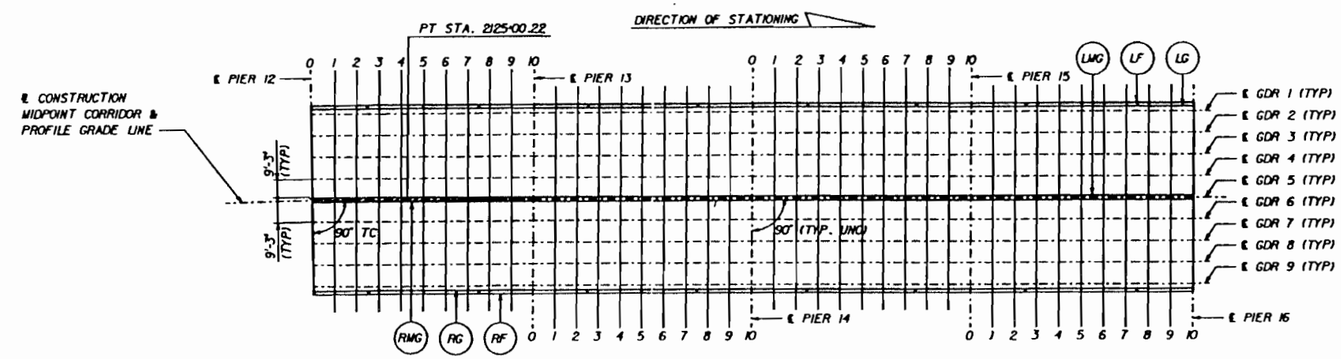

PLAN - UNIT D
SPANS 12 THRU 15

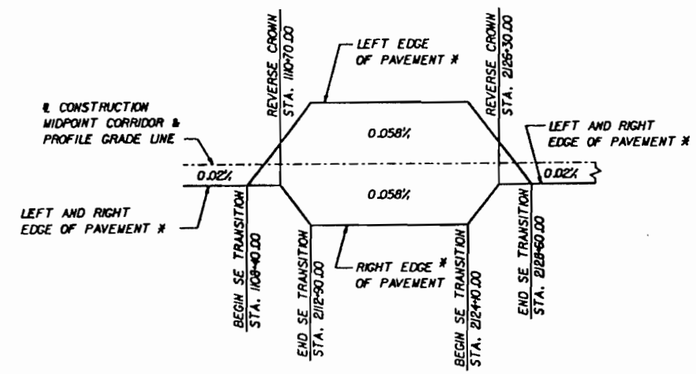

SUPERELEVATION TRANSITION DIAGRAM

* PAVEMENT ON THE BRIDGE REFERS TO THE DECK FASCIA ON THE BRIDGE.

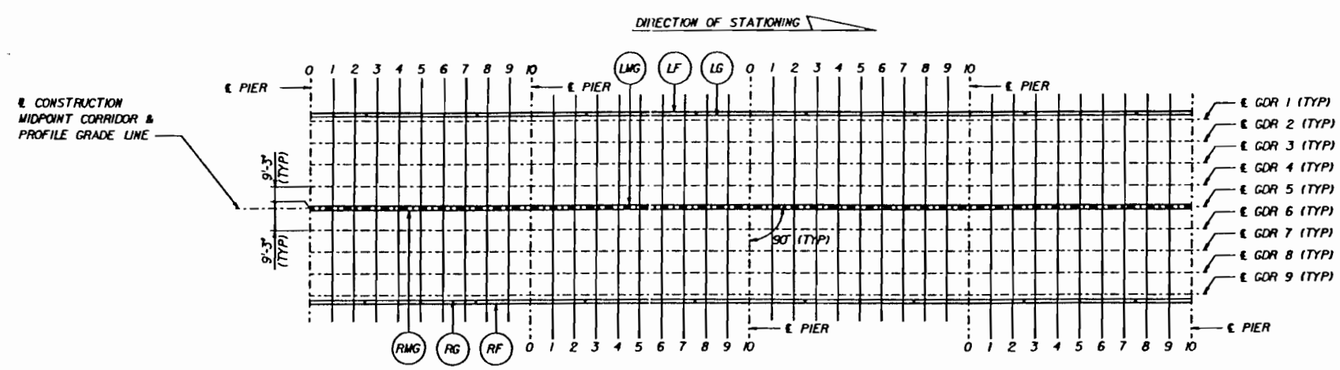

PLAN - UNIT E, F, G OR H
UNIT E - SPANS 16 THRU 19
UNIT F - SPANS 20 THRU 23
UNIT G - SPANS 24 THRU 27
UNIT H - SPANS 28 THRU 31

TABLE OF SUBSTRUCTURE STATIONS

ELEMENT	℄ PIER 12	℄ PIER 13	℄ PIER 14	℄ PIER 15	℄ PIER 16	℄ PIER 17	℄ PIER 18	℄ PIER 19	℄ PIER 20	℄ PIER 21	℄ PIER 22	℄ PIER 23	℄ PIER 24	℄ PIER 25	℄ PIER 26	℄ PIER 27	℄ PIER 28	℄ PIER 29	℄ PIER 30	℄ PIER 31	℄ PIER 32
STATION	2124+60.17	2125+54.08	2126+48.00	2127+41.92	2128+35.83	2129+29.75	2130+23.67	2131+17.58	2132+11.50	2133+05.42	2133+99.33	2134+93.25	2135+87.17	2136+81.08	2137+75.00	2138+68.92	2139+62.83	2140+56.75	2141+50.67	2142+44.58	2143+38.50

3/3/95

REVISIONS											
DATE	BY	DESCRIPTION	DATE	BY	DESCRIPTION	DATE	BY	DESCRIPTION	DATE	BY	DESCRIPTION

	NAME	DATE
DR. BY	MDD	4/93
CHK. BY	MCM	4/93
SUPV.	REJ	7/93

Greiner
Greiner, Inc.
Tampa, Florida

Engineers, Architects and Planners

BOARD OF COUNTY COMMISSIONERS
LEE COUNTY, FLORIDA
DEPARTMENT OF TRANSPORTATION

MIDPOINT BRIDGE
FINISH GRADE ELEVATIONS (2)

PROJECT NO	SHEET NO
5896	C-5.3A

BX1-63

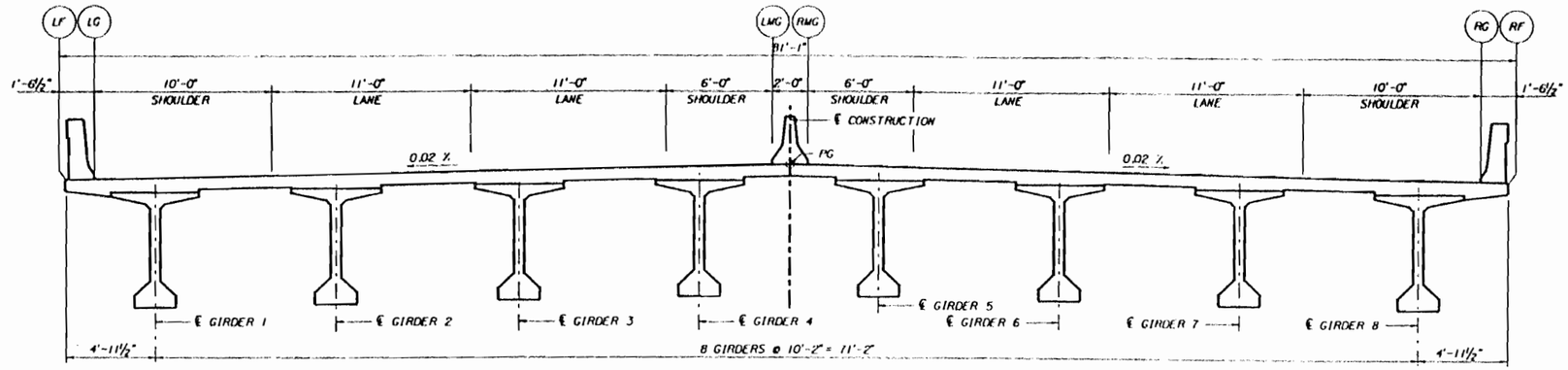

TYPICAL SECTION THRU SLAB
MOD. TYPE VI SHOWN

NOTES

LF - DENOTES LEFT FASCIA
LG - DENOTES LEFT GUTTER
LMG - DENOTES LEFT MEDIAN GUTTER
PG - DENOTES PROFILE GRADE
RG - DENOTES RIGHT GUTTER
RF - DENOTES RIGHT FASCIA
RMG - DENOTES RIGHT MEDIAN GUTTER

INCR. DIST.: THE DISTANCE ALONG FASCIA LINES, GUTTER LINES, PROFILE GRADE LINE AND GIRDER CENTERLINES BETWEEN POINTS.

POINTS: POINT "0" IS LOCATED AT ℄ OF PIER AT THE BEGINNING OF THE SPAN AND THE LAST POINT IS AT THE ℄ OF PIER AT THE END OF THE SPAN.

ELEVATIONS: ELEVATIONS GIVEN ARE TOP OF SLAB ELEVATIONS AT FASCIA LINES, GUTTER LINES, PROFILE GRADE LINE AND OVER GIRDER CENTERLINES.

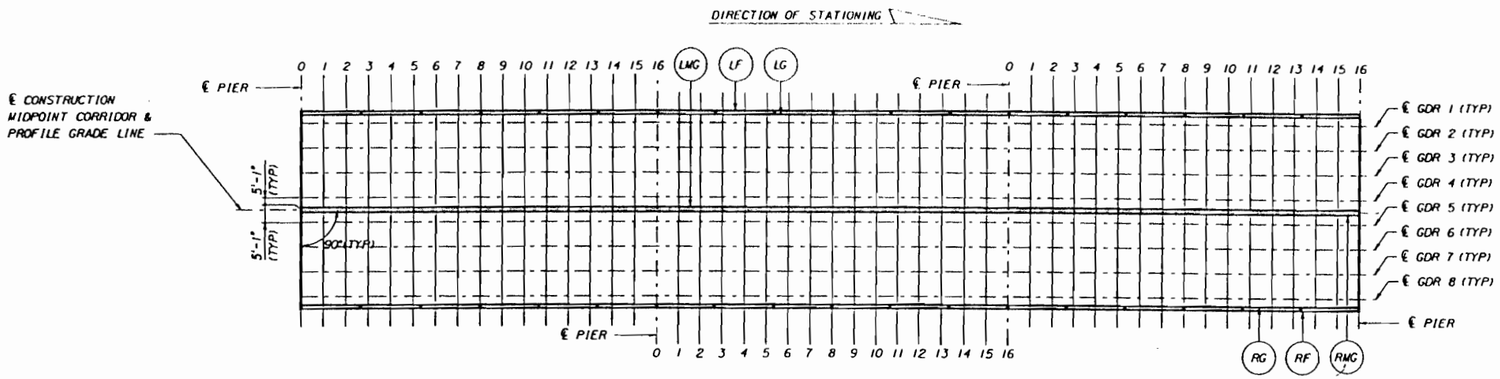

PLAN - UNITS I, J, N & P
UNIT I - SPANS 32 THRU 34
UNIT J - SPANS 35 THRU 37
UNIT N - SPANS 49 THRU 51
UNIT P - SPANS 52 THRU 54

TABLE OF SUBSTRUCTURE STATIONS							
ELEMENT	℄ PIER 32	℄ PIER 33	℄ PIER 34	℄ PIER 35	℄ PIER 36	℄ PIER 37	℄ PIER 38
STATION	2143+38.50	2144+83.25	2146+28.00	2147+72.75	2149+17.50	2150+62.25	2152+07.00
ELEMENT	℄ PIER 49	℄ PIER 50	℄ PIER 51	℄ PIER 52	℄ PIER 53	℄ PIER 54	℄ PIER 55
STATION	2168+85.00	2170+29.75	2171+74.50	2173+19.25	2174+64.00	2176+08.75	2177+53.50

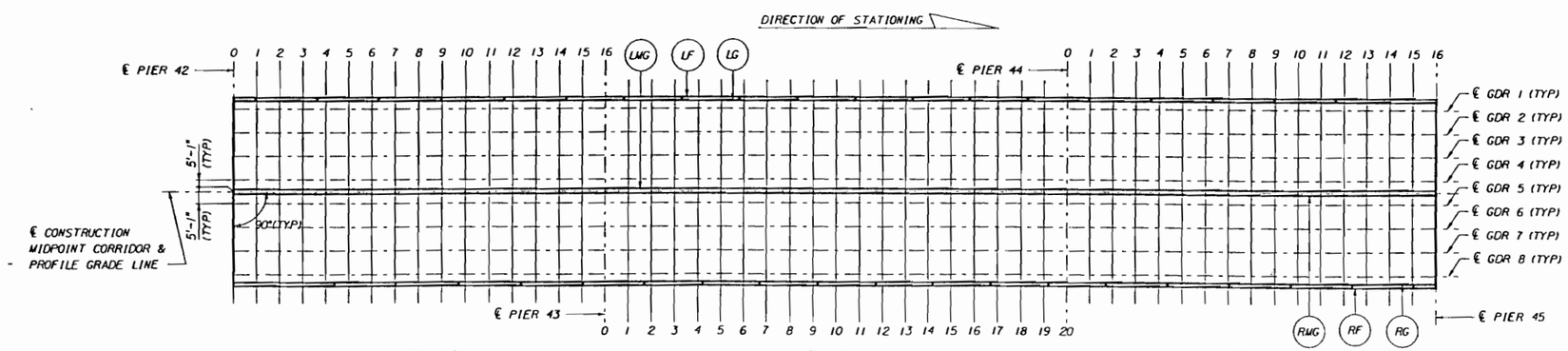

PLAN - UNIT L
SPANS 42 THRU 44

TABLE OF SUBSTRUCTURE STATIONS				
ELEMENT	℄ PIER 42	℄ PIER 43	℄ PIER 44	℄ PIER 45
STATION	2157+86.00	2159+46.00	2161+46.00	2163+06.00

6/MAY 96

FINLEY McNARY/JANSSEN SPAANS
a Joint Venture

Finley McNary Engineers, Inc
1391 Timberlane Road Suite 200
Tallahassee, Florida 32312-1721

Janssen & Spaans Engineers, Inc.
2825 East 56th Street
Indianapolis, Indiana 46220

REVISIONS

DATE	BY	DESCRIPTION	DATE	BY	DESCRIPTION	DATE	BY	DESCRIPTION	DATE	BY

	NAME	DATE
DR. BY	J.L.S.	1/96
CHK. BY	C.W.K.	1/96
SUPV.	H.D.R.	1/96

FINLEY McNARY/JANSSEN SPAANS

BOARD OF COUNTY COMMISSIONERS
LEE COUNTY, FLORIDA
DEPARTMENT OF TRANSPORTATION

MIDPOINT BRIDGE
FINISH GRADE ELEVATIONS (3)

PROJECT NO.	SHEET NO.
5896	C-54A

BX1-64

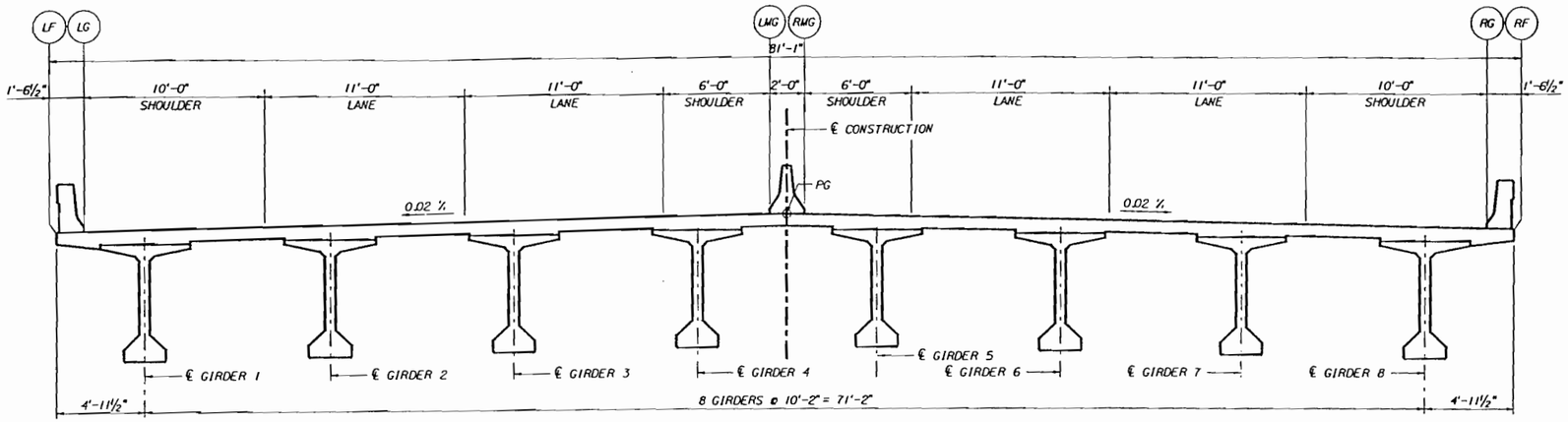

TYPICAL SECTION THRU SLAB
MOD. TYPE VI SHOWN

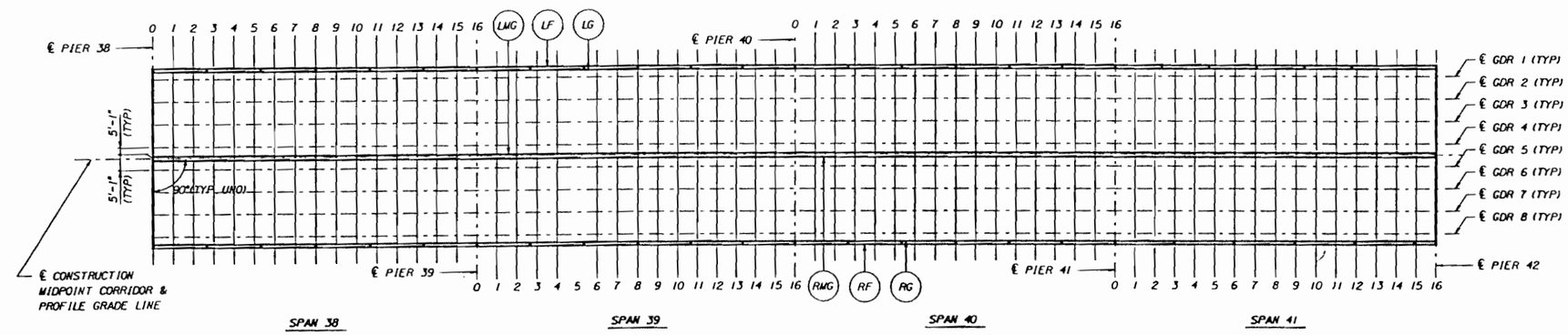

PLAN - UNIT K
SPANS 38 THRU 41

TABLE OF SUBSTRUCTURE STATIONS					
ELEMENT	℄ PIER 38	℄ PIER 39	℄ PIER 40	℄ PIER 41	℄ PIER 42
STATION	2152+07.00	2153+51.75	2154+96.50	2156+41.25	2157+86.00

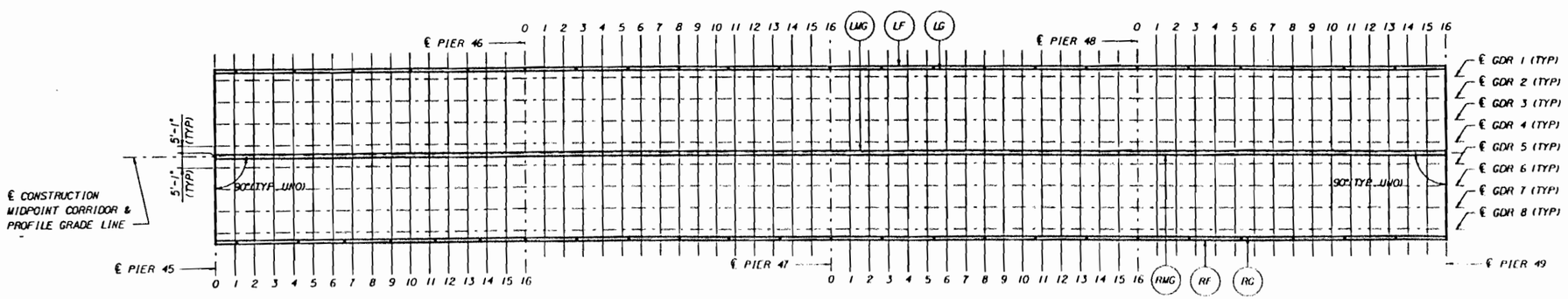

PLAN - UNIT M
SPANS 45 THRU 48

TABLE OF SUBSTRUCTURE STATIONS					
ELEMENT	℄ PIER 45	℄ PIER 46	℄ PIER 47	℄ PIER 48	℄ PIER 49
STATION	2163+06.00	2164+50.75	2165+95.50	2167+40.25	2168+85.00

NOTES

LF - DENOTES LEFT FASCIA
LG - DENOTES LEFT GUTTER
LWG - DENOTES LEFT MEDIAN GUTTER
PG - DENOTES PROFILE GRADE
RG - DENOTES RIGHT GUTTER
RF - DENOTES RIGHT FASCIA
RWG - DENOTES RIGHT MEDIAN GUTTER

INCR. DIST.: THE DISTANCE ALONG FASCIA LINES, GUTTER LINES, PROFILE GRADE LINE AND GIRDER CENTERLINES BETWEEN POINTS.

POINTS: POINT "0" IS LOCATED AT ℄ OF PIER AT THE BEGINNING OF THE SPAN AND THE LAST POINT IS AT THE ℄ OF PIER AT THE END OF THE SPAN.

ELEVATIONS: ELEVATIONS GIVEN ARE TOP OF SLAB ELEVATIONS AT FASCIA LINES, GUTTER LINES, PROFILE GRADE LINE AND OVER GIRDER CENTERLINES.

16 MAY 96

FINLEY McNARY/JANSSEN SPAANS
a Joint Venture

Finley McNary Engineers, Inc.
1391 Timberlane Road Suite 200
Tallahassee, Florida 32312-1721

Janssen & Spaans Engineers, Inc.
2825 East 56th Street
Indianapolis, Indiana 46220

REVISIONS

DATE	BY	DESCRIPTION	DATE	BY	DESCRIPTION	DATE	BY	DESCRIPTION	DATE	BY	

	NAME	DATE
DR. BY	J.L.S.	1/96
CHK. BY	C.W.H.	1/96
SUPV.	H.D.R.	1/96

FINLEY McNARY/JANSSEN SPAANS

BOARD OF COUNTY COMMISSIONERS
LEE, COUNTY, FLORIDA
DEPARTMENT OF TRANSPORTATION

MIDPOINT BRIDGE
FINISH GRADE ELEVATIONS (4)

PROJECT NO	SHEET NO
5896	C-55

BX1-65

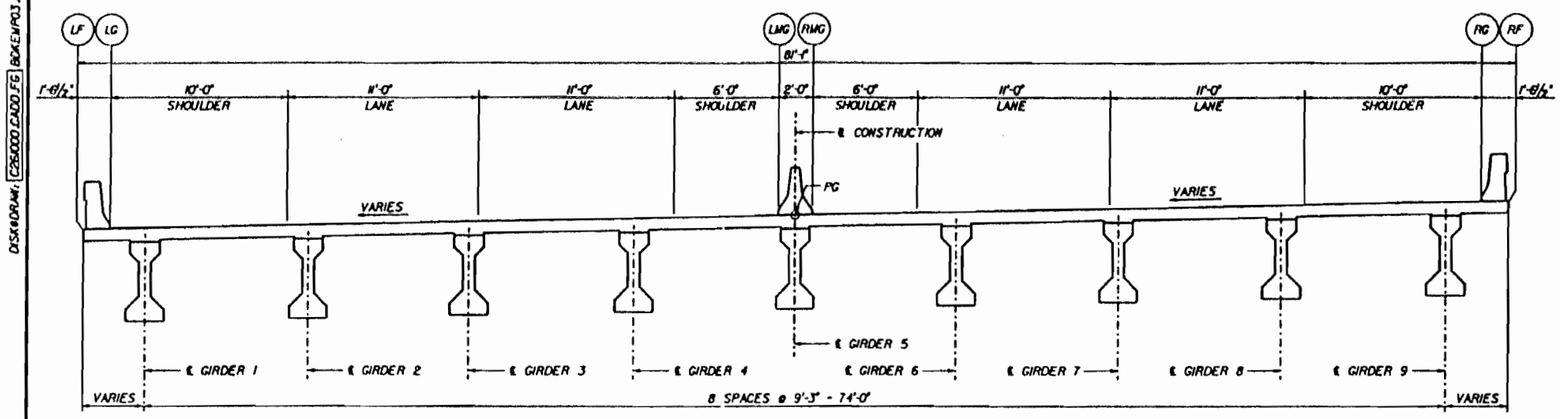

TYPICAL SECTION THRU SLAB

NOTES

LF - DENOTES LEFT FASCIA
LG - DENOTES LEFT GUTTER
LMG - DENOTES LEFT MEDIAN GUTTER
PG - DENOTES PROFILE GRADE
RG - DENOTES RIGHT GUTTER
RF - DENOTES RIGHT FASCIA
RMG - DENOTES RIGHT MEDIAN GUTTER

INCR. DIST.: THE DISTANCE ALONG FASCIA LINES, GUTTER LINES, PROFILE GRADE LINE AND GIRDER CENTERLINES BETWEEN POINTS.

POINTS: POINT "0" IS LOCATED AT FFBW OR ℄ OF PIER AT THE BEGINNING OF THE SPAN AND THE LAST POINT IS AT THE FFBW OR ℄ OF PIER AT THE END OF THE SPAN.

ELEVATIONS: ELEVATIONS GIVEN ARE TOP OF SLAB ELEVATIONS AT FASCIA LINES, GUTTER LINES, PROFILE GRADE LINE AND OVER GIRDER CENTERLINES.

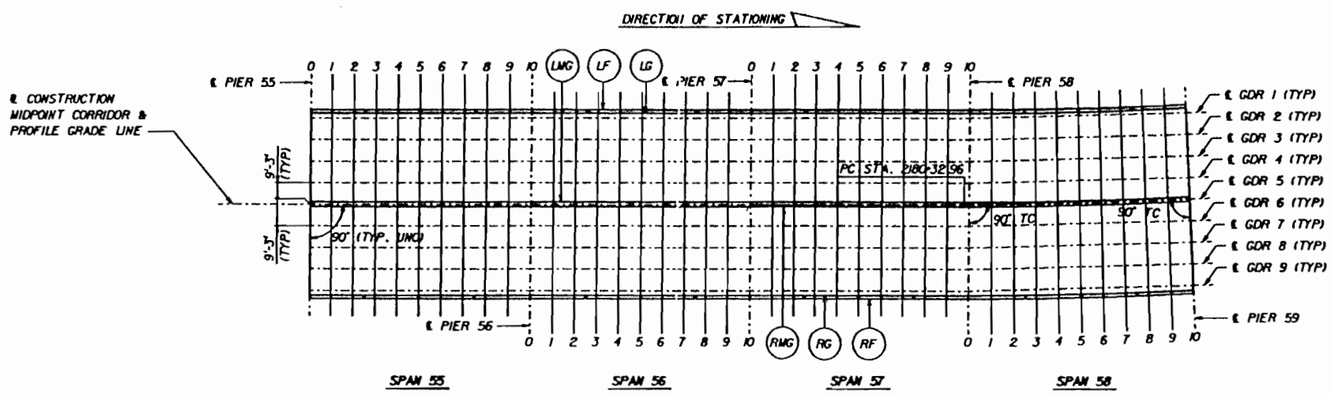

PLAN - UNIT R
SPANS 55 THRU 58

TABLE OF SUBSTRUCTURE STATIONS										
ELEMENT	℄ PIER 55	℄ PIER 56	℄ PIER 57	℄ PIER 58	℄ PIER 59	℄ PIER 60	℄ PIER 61	℄ PIER 62	℄ PIER 63	FFBW END BENT 64
STATION	2177+53.50	2178+47.42	2179+41.33	2180+35.25	2181+29.17	2182+23.08	2183+17.00	2184+10.92	2185+04.83	2185+98.75

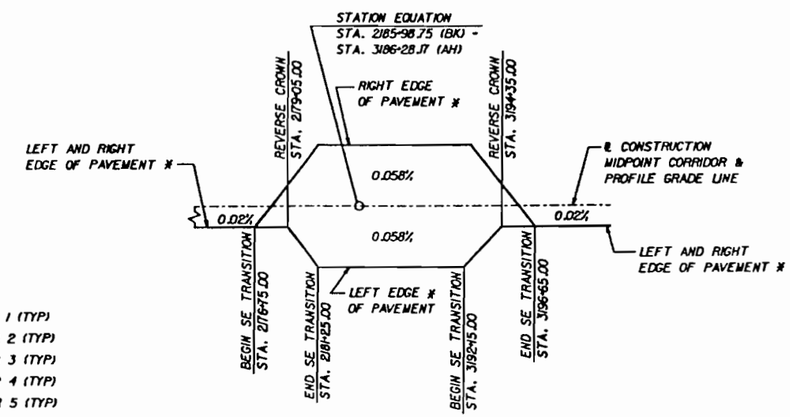

SUPERELEVATION TRANSITION DIAGRAM

* PAVEMENT ON THE BRIDGE REFERS TO THE DECK FASCIA ON THE BRIDGE.

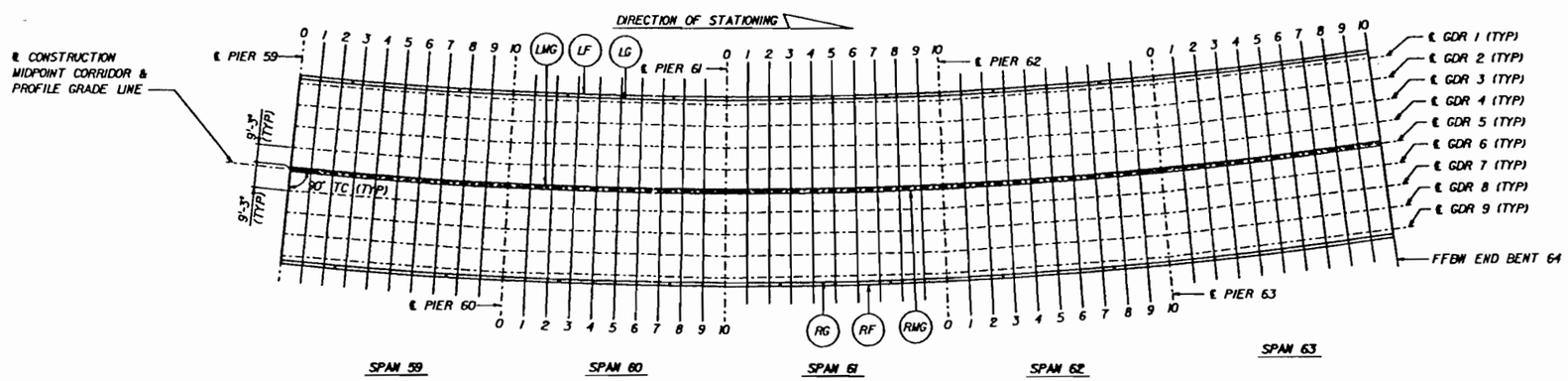

PLAN - UNIT S
SPANS 59 THRU 63

R E Jarnett 3/3/95

REVISIONS											
DATE	BY	DESCRIPTION	DATE	BY	DESCRIPTION	DATE	BY	DESCRIPTION	DATE	BY	DESCRIPTION

	NAME	DATE
DR. BY	MDO	4/93
CHK. BY	MCW	4/93
SUPV.	REJ	7/93

Greiner, Inc. Tampa, Florida

Engineers, Architects and Planners

BOARD OF COUNTY COMMISSIONERS
LEE COUNTY, FLORIDA
DEPARTMENT OF TRANSPORTATION

MIDPOINT BRIDGE
FINISH GRADE ELEVATIONS (5)

DISK:WORK#: C25G00.EA00.FG BCKE.WP03.FG3
FILE:CTY

DISK#DRAW: C26000.CADD.FG BOXEMPOS.FGB

PROJECT NO.	SHEET NO
5896	C-56

BX1-66

SPAN 1 — FINISHED GRADE ELEVATIONS AT POINTS

SPAN 1	INCR. DIST.	0	1	2	3	4	5	6	7	8	9	10
GDR 1	9.573	23.178	23.164	23.154	23.147	23.143	23.142	23.143	23.147	23.154	23.164	23.178
GDR 2	9.527	22.839	22.827	22.818	22.811	22.807	22.806	22.807	22.811	22.818	22.827	22.839
GDR 3	9.482	22.103	22.091	22.081	22.075	22.071	22.069	22.071	22.075	22.081	22.091	22.103
GDR 4	9.436	21.587	21.554	21.545	21.538	21.534	21.533	21.534	21.538	21.545	21.554	21.566
GDR 5	9.391	21.030	21.018	21.009	21.002	20.998	20.997	20.998	21.002	21.009	21.018	21.030
GDR 6	9.345	20.494	20.482	20.472	20.466	20.462	20.460	20.462	20.466	20.472	20.482	20.493
GDR 7	9.300	19.957	19.945	19.938	19.929	19.925	19.924	19.925	19.929	19.938	19.945	19.957
GDR 8	9.254	19.420	19.409	19.399	19.393	19.389	19.388	19.389	19.393	19.399	19.409	19.420
GDR 9	9.209	18.884	18.872	18.863	18.856	18.852	18.851	18.852	18.856	18.863	18.872	18.884

SPAN 1	INCR. DIST.	0	1	2	3	4	5	6	7	8	9	10
LF	9.591	23.381	23.381	23.381	23.381	23.381	23.381	23.381	23.381	23.381	23.381	23.381
LG	9.583	23.292	23.292	23.292	23.292	23.292	23.292	23.292	23.292	23.292	23.292	23.292
LMG	9.397	21.088	21.088	21.088	21.088	21.088	21.088	21.088	21.088	21.088	21.088	21.088
PG	9.392	21.030	21.030	21.030	21.030	21.030	21.030	21.030	21.030	21.030	21.030	21.030
RMG	9.387	20.972	20.972	20.972	20.972	20.972	20.972	20.972	20.972	20.972	20.972	20.972
RG	9.200	18.768	18.768	18.768	18.768	18.768	18.768	18.768	18.768	18.768	18.768	18.768
RF	9.192	18.679	18.679	18.679	18.679	18.679	18.679	18.679	18.679	18.679	18.679	18.679

SPAN 2 — FINISHED GRADE ELEVATIONS AT POINTS

SPAN 2	INCR. DIST.	0	1	2	3	4	5	6	7	8	9	10
GDR 1	9.573	23.178	23.164	23.154	23.147	23.143	23.142	23.143	23.147	23.154	23.164	23.178
GDR 2	9.527	22.839	22.827	22.818	22.811	22.807	22.806	22.807	22.811	22.818	22.827	22.839
GDR 3	9.482	22.103	22.091	22.081	22.075	22.071	22.069	22.071	22.075	22.081	22.091	22.103
GDR 4	9.436	21.566	21.554	21.545	21.538	21.534	21.533	21.534	21.538	21.545	21.554	21.587
GDR 5	9.391	21.030	21.018	21.009	21.002	20.998	20.997	20.998	21.002	21.009	21.018	21.030
GDR 6	9.345	20.493	20.482	20.472	20.466	20.462	20.460	20.462	20.466	20.472	20.482	20.493
GDR 7	9.300	19.957	19.945	19.938	19.929	19.925	19.924	19.925	19.929	19.938	19.945	19.957
GDR 8	9.254	19.420	19.409	19.399	19.393	19.389	19.388	19.389	19.393	19.399	19.409	19.420
GDR 9	9.209	18.884	18.872	18.863	18.856	18.852	18.851	18.852	18.856	18.863	18.872	18.884

SPAN 2	INCR. DIST.	0	1	2	3	4	5	6	7	8	9	10
LF	9.591	23.381	23.381	23.381	23.381	23.381	23.381	23.381	23.381	23.381	23.381	23.381
LG	9.583	23.292	23.292	23.292	23.292	23.292	23.292	23.292	23.292	23.292	23.292	23.292
LMG	9.397	21.088	21.088	21.088	21.088	21.088	21.088	21.088	21.088	21.088	21.088	21.088
PG	9.392	21.030	21.030	21.030	21.030	21.030	21.030	21.030	21.030	21.030	21.030	21.030
RMG	9.387	20.972	20.972	20.972	20.972	20.972	20.972	20.972	20.972	20.972	20.972	20.972
RG	9.200	18.768	18.768	18.768	18.768	18.768	18.768	18.768	18.768	18.768	18.768	18.768
RF	9.192	18.679	18.679	18.679	18.679	18.679	18.679	18.679	18.679	18.679	18.679	18.679

SPAN 3 — FINISHED GRADE ELEVATIONS AT POINTS

SPAN 3	INCR. DIST.	0	1	2	3	4	5	6	7	8	9	10
GDR 1	9.573	23.176	23.164	23.154	23.147	23.143	23.142	23.143	23.147	23.154	23.164	23.176
GDR 2	9.527	22.839	22.827	22.818	22.811	22.807	22.806	22.807	22.811	22.818	22.827	22.839
GDR 3	9.482	22.103	22.091	22.081	22.075	22.071	22.069	22.071	22.075	22.081	22.091	22.103
GDR 4	9.436	21.566	21.554	21.545	21.538	21.534	21.533	21.534	21.538	21.545	21.554	21.587
GDR 5	9.391	21.030	21.018	21.009	21.002	20.998	20.997	20.998	21.002	21.009	21.018	21.030
GDR 6	9.345	20.493	20.482	20.472	20.466	20.462	20.460	20.462	20.466	20.472	20.482	20.493
GDR 7	9.300	19.957	19.945	19.938	19.929	19.925	19.924	19.925	19.929	19.938	19.945	19.957
GDR 8	9.254	19.420	19.409	19.399	19.393	19.389	19.388	19.389	19.393	19.399	19.409	19.421
GDR 9	9.209	18.884	18.872	18.863	18.856	18.852	18.851	18.852	18.856	18.863	18.872	18.884

SPAN 3	INCR. DIST.	0	1	2	3	4	5	6	7	8	9	10
LF	9.591	23.381	23.381	23.381	23.381	23.381	23.381	23.381	23.381	23.381	23.381	23.381
LG	9.583	23.292	23.292	23.292	23.292	23.292	23.292	23.292	23.292	23.292	23.292	23.292
LMG	9.397	21.088	21.088	21.088	21.088	21.088	21.088	21.088	21.088	21.088	21.088	21.088
PG	9.392	21.030	21.030	21.030	21.030	21.030	21.030	21.030	21.030	21.030	21.030	21.030
RMG	9.387	20.972	20.972	20.972	20.972	20.972	20.972	20.972	20.972	20.972	20.972	20.972
RG	9.200	18.768	18.768	18.768	18.768	18.768	18.768	18.768	18.768	18.768	18.768	18.768
RF	9.192	18.679	18.679	18.679	18.679	18.679	18.679	18.679	18.679	18.679	18.679	18.679

SPAN 4 — FINISHED GRADE ELEVATIONS AT POINTS

SPAN 4	INCR. DIST.	0	1	2	3	4	5	6	7	8	9	10
GDR 1	9.573	23.176	23.164	23.154	23.147	23.143	23.142	23.143	23.147	23.154	23.164	23.176
GDR 2	9.527	22.839	22.827	22.818	22.811	22.807	22.806	22.807	22.811	22.818	22.827	22.839
GDR 3	9.482	22.103	22.091	22.081	22.075	22.071	22.069	22.071	22.075	22.081	22.091	22.103
GDR 4	9.436	21.567	21.554	21.545	21.538	21.534	21.533	21.534	21.538	21.545	21.554	21.587
GDR 5	9.391	21.030	21.018	21.009	21.002	20.998	20.997	20.998	21.002	21.009	21.018	21.030
GDR 6	9.345	20.493	20.482	20.472	20.466	20.462	20.460	20.462	20.466	20.472	20.482	20.493
GDR 7	9.300	19.957	19.945	19.936	19.929	19.925	19.924	19.925	19.929	19.936	19.945	19.957
GDR 8	9.254	19.420	19.409	19.399	19.393	19.389	19.388	19.389	19.393	19.399	19.409	19.421
GDR 9	9.209	18.884	18.872	18.863	18.856	18.852	18.851	18.852	18.856	18.863	18.872	18.884

SPAN 4	INCR. DIST.	0	1	2	3	4	5	6	7	8	9	10
LF	9.591	23.381	23.381	23.381	23.381	23.381	23.381	23.381	23.381	23.381	23.381	23.381
LG	9.583	23.292	23.292	23.292	23.292	23.292	23.292	23.292	23.292	23.292	23.292	23.292
LMG	9.397	21.088	21.088	21.088	21.088	21.088	21.088	21.088	21.088	21.088	21.088	21.088
PG	9.392	21.030	21.030	21.030	21.030	21.030	21.030	21.030	21.030	21.030	21.030	21.030
RMG	9.387	20.972	20.972	20.972	20.972	20.972	20.972	20.972	20.972	20.972	20.972	20.972
RG	9.200	18.768	18.768	18.768	18.768	18.768	18.768	18.768	18.768	18.768	18.768	18.768
RF	9.192	18.679	18.679	18.679	18.679	18.679	18.679	18.679	18.679	18.679	18.679	18.679

SPAN 5 — FINISHED GRADE ELEVATIONS AT POINTS

SPAN 5	INCR. DIST.	0	1	2	3	4	5	6	7	8	9	10
GDR 1	9.573	23.178	23.164	23.154	23.147	23.143	23.142	23.143	23.147	23.154	23.164	23.178
GDR 2	9.527	22.839	22.827	22.818	22.811	22.807	22.806	22.807	22.811	22.818	22.827	22.839
GDR 3	9.482	22.103	22.091	22.081	22.075	22.071	22.069	22.071	22.075	22.081	22.091	22.103
GDR 4	9.436	21.567	21.554	21.545	21.538	21.534	21.533	21.534	21.538	21.545	21.554	21.566
GDR 5	9.391	21.030	21.018	21.009	21.002	20.998	20.997	20.998	21.002	21.009	21.018	21.030
GDR 6	9.345	20.493	20.482	20.472	20.466	20.462	20.460	20.462	20.466	20.472	20.482	20.493
GDR 7	9.300	19.957	19.945	19.938	19.929	19.925	19.924	19.925	19.929	19.938	19.945	19.957
GDR 8	9.254	19.420	19.409	19.399	19.393	19.389	19.388	19.389	19.393	19.399	19.409	19.420
GDR 9	9.209	18.884	18.872	18.863	18.856	18.852	18.851	18.852	18.856	18.863	18.872	18.884

SPAN 5	INCR. DIST.	0	1	2	3	4	5	6	7	8	9	10
LF	9.591	23.381	23.381	23.381	23.381	23.381	23.381	23.381	23.381	23.381	23.381	23.381
LG	9.583	23.292	23.292	23.292	23.292	23.292	23.292	23.292	23.292	23.292	23.292	23.292
LMG	9.397	21.088	21.088	21.088	21.088	21.088	21.088	21.088	21.088	21.088	21.088	21.088
PG	9.392	21.030	21.030	21.030	21.030	21.030	21.030	21.030	21.030	21.030	21.030	21.030
RMG	9.387	20.972	20.972	20.972	20.972	20.972	20.972	20.972	20.972	20.972	20.972	20.972
RG	9.200	18.768	18.768	18.768	18.768	18.768	18.768	18.768	18.768	18.768	18.768	18.768
RF	9.192	18.679	18.679	18.679	18.679	18.679	18.679	18.679	18.679	18.679	18.679	18.679

SPAN 6 — FINISHED GRADE ELEVATIONS AT POINTS

SPAN 6	INCR. DIST.	0	1	2	3	4	5	6	7	8	9	10
GDR 1	9.573	23.176	23.164	23.154	23.147	23.143	23.142	23.143	23.147	23.154	23.164	23.176
GDR 2	9.527	22.839	22.827	22.818	22.811	22.807	22.806	22.807	22.811	22.818	22.827	22.839
GDR 3	9.482	22.103	22.091	22.081	22.075	22.071	22.069	22.071	22.075	22.081	22.091	22.103
GDR 4	9.436	21.566	21.554	21.545	21.538	21.534	21.533	21.534	21.538	21.545	21.554	21.587
GDR 5	9.391	21.030	21.018	21.009	21.002	20.998	20.997	20.998	21.002	21.009	21.018	21.030
GDR 6	9.345	20.493	20.482	20.472	20.466	20.462	20.460	20.482	20.466	20.472	20.482	20.493
GDR 7	9.300	19.957	19.945	19.938	19.929	19.925	19.924	19.925	19.929	19.938	19.945	19.957
GDR 8	9.254	19.420	19.409	19.399	19.393	19.389	19.388	19.389	19.393	19.399	19.409	19.420
GDR 9	9.209	18.884	18.872	18.863	18.858	18.852	18.851	18.852	18.856	18.863	18.872	18.884

SPAN 6	INCR. DIST.	0	1	2	3	4	5	6	7	8	9	10
LF	9.591	23.381	23.381	23.381	23.381	23.381	23.381	23.381	23.381	23.381	23.381	23.381
LG	9.583	23.292	23.292	23.292	23.292	23.292	23.292	23.292	23.292	23.292	23.292	23.292
LMG	9.397	21.088	21.088	21.088	21.088	21.088	21.088	21.088	21.088	21.088	21.088	21.088
PG	9.392	21.030	21.030	21.030	21.030	21.030	21.030	21.030	21.030	21.030	21.030	21.030
RMG	9.387	20.972	20.972	20.972	20.972	20.972	20.972	20.972	20.972	20.972	20.972	20.972
RG	9.200	18.768	18.768	18.768	18.768	18.768	18.768	18.768	18.768	18.768	18.768	18.768
RF	9.192	18.679	18.679	18.679	18.679	18.679	18.679	18.679	18.679	18.679	18.679	18.679

SPAN 7 — FINISHED GRADE ELEVATIONS AT POINTS

SPAN 7	INCR. DIST.	0	1	2	3	4	5	6	7	8	9	10
GDR 1	9.573	23.176	23.164	23.154	23.147	23.143	23.142	23.143	23.147	23.154	23.164	23.176
GDR 2	9.527	22.839	22.827	22.818	22.811	22.807	22.806	22.807	22.811	22.818	22.827	22.839
GDR 3	9.482	22.103	22.091	22.081	22.075	22.071	22.069	22.071	22.075	22.081	22.091	22.103
GDR 4	9.436	21.587	21.554	21.545	21.538	21.534	21.533	21.534	21.538	21.545	21.554	21.587
GDR 5	9.391	21.030	21.018	21.009	21.002	20.998	20.997	20.998	21.002	21.009	21.018	21.030
GDR 6	9.345	20.493	20.482	20.472	20.466	20.462	20.460	20.462	20.466	20.472	20.482	20.493
GDR 7	9.300	19.957	19.945	19.938	19.929	19.925	19.924	19.925	19.929	19.938	19.945	19.957
GDR 8	9.254	19.420	19.409	19.399	19.393	19.389	19.388	19.389	19.393	19.399	19.409	19.421
GDR 9	9.209	18.884	18.872	18.863	18.858	18.852	18.851	18.852	18.856	18.863	18.872	18.884

SPAN 7	INCR. DIST.	0	1	2	3	4	5	6	7	8	9	10
LF	9.591	23.381	23.381	23.381	23.381	23.381	23.381	23.381	23.381	23.381	23.381	23.381
LG	9.583	23.292	23.292	23.292	23.292	23.292	23.292	23.292	23.292	23.292	23.292	23.292
LMG	9.397	21.088	21.088	21.088	21.088	21.088	21.088	21.088	21.088	21.088	21.088	21.088
PG	9.392	21.030	21.030	21.030	21.030	21.030	21.030	21.030	21.030	21.030	21.030	21.030
RMG	9.387	20.972	20.972	20.972	20.972	20.972	20.972	20.972	20.972	20.972	20.972	20.972
RG	9.200	18.768	18.768	18.768	18.768	18.768	18.768	18.768	18.768	18.768	18.768	18.768
RF	9.192	18.679	18.679	18.679	18.679	18.679	18.679	18.679	18.679	18.679	18.679	18.679

SPAN 8 — FINISHED GRADE ELEVATIONS AT POINTS

SPAN 8	INCR. DIST.	0	1	2	3	4	5	6	7	8	9	10
GDR 1	9.573	23.176	23.164	23.154	23.147	23.143	23.142	23.143	23.147	23.154	23.164	23.176
GDR 2	9.527	22.839	22.827	22.818	22.611	22.607	22.606	22.607	22.611	22.618	22.627	22.639
GDR 3	9.482	22.103	22.091	22.081	22.075	22.071	22.069	22.071	22.075	22.081	22.091	22.103
GDR 4	9.436	21.587	21.554	21.545	21.538	21.534	21.533	21.534	21.538	21.545	21.554	21.567
GDR 5	9.391	21.030	21.018	21.009	21.002	20.998	20.997	20.998	21.002	21.009	21.018	21.030
GDR 6	9.345	20.493	20.482	20.472	20.466	20.462	20.460	20.462	20.466	20.472	20.482	20.493
GDR 7	9.300	19.957	19.945	19.936	19.929	19.925	19.924	19.925	19.929	19.936	19.945	19.957
GDR 8	9.254	19.421	19.409	19.399	19.393	19.389	19.388	19.389	19.393	19.399	19.409	19.420
GDR 9	9.209	18.884	18.872	18.863	18.856	18.852	18.851	18.852	18.856	18.863	18.872	18.884

SPAN 8	INCR. DIST.	0	1	2	3	4	5	6	7	8	9	10
LF	9.591	23.381	23.381	23.381	23.381	23.381	23.381	23.381	23.381	23.381	23.381	23.381
LG	9.583	23.292	23.292	23.292	23.292	23.292	23.292	23.292	23.292	23.292	23.292	23.292
LMG	9.397	21.088	21.088	21.088	21.088	21.088	21.088	21.088	21.088	21.088	21.088	21.088
PG	9.392	21.030	21.030	21.030	21.030	21.030	21.030	21.030	21.030	21.030	21.030	21.030
RMG	9.387	20.972	20.972	20.972	20.972	20.972	20.972	20.972	20.972	20.972	20.972	20.972
RG	9.200	18.768	18.768	18.768	18.768	18.768	18.768	18.768	18.768	18.768	18.768	18.768
RF	9.192	18.679	18.679	18.679	18.679	18.679	18.679	18.679	18.679	18.679	18.679	18.679

REVISIONS

DATE	BY	DESCRIPTION	DATE	BY	DESCRIPTION	DATE	BY	DESCRIPTION	DATE	BY	DESCRIPTION

	NAME	DATE
DR. BY	MDD	5/93
CHK. BY	REJ	8/93
SUPV.	REJ	7/93

Greiner — Greiner, Inc. — Tampa, Florida — Engineers, Architects and Planners

BOARD OF COUNTY COMMISSIONERS
LEE COUNTY, FLORIDA
DEPARTMENT OF TRANSPORTATION

MIDPOINT BRIDGE
FINISH GRADE ELEVATIONS (6)

FRLEECTY

PLOTTED: 27JAN95-09.56.30

PROJECT NO.	SHEET NO.
5896	C-57

BX1-67

DISK#DRAW: C25000.CADD.FG BOKEMPOT.FGB

SPAN 9	INCR. DIST.	0	1	2	3	4	5	6	7	8	9	10
		FINISHED GRADE ELEVATIONS AT POINTS										
GDR 1	9.573	23.176	23.164	23.154	23.147	23.143	23.142	23.143	23.147	23.154	23.164	23.176
GDR 2	9.527	22.839	22.827	22.818	22.811	22.807	22.806	22.807	22.811	22.818	22.827	22.840
GDR 3	9.482	22.103	22.091	22.081	22.075	22.071	22.069	22.071	22.075	22.081	22.091	22.103
GDR 4	9.436	21.567	21.554	21.545	21.538	21.534	21.533	21.534	21.538	21.545	21.554	21.567
GDR 5	9.391	21.030	21.018	21.009	21.002	20.998	20.997	20.998	21.002	21.009	21.018	21.030
GDR 6	9.345	20.493	20.482	20.472	20.466	20.462	20.460	20.462	20.466	20.472	20.482	20.493
GDR 7	9.300	19.957	19.945	19.936	19.929	19.925	19.924	19.925	19.929	19.936	19.945	19.957
GDR 8	9.254	19.420	19.409	19.399	19.393	19.389	19.388	19.389	19.393	19.399	19.409	19.420
GDR 9	9.209	18.884	18.872	18.863	18.856	18.852	18.851	18.852	18.856	18.863	18.872	18.884

SPAN 9	INCR. DIST.	0	1	2	3	4	5	6	7	8	9	10
		FINISHED GRADE ELEVATIONS AT POINTS										
LF	9.591	23.381	23.381	23.381	23.381	23.381	23.381	23.381	23.381	23.381	23.381	23.381
LG	9.583	23.292	23.292	23.292	23.292	23.292	23.292	23.292	23.292	23.292	23.292	23.292
LMG	9.397	21.088	21.088	21.088	21.088	21.088	21.088	21.088	21.088	21.088	21.088	21.088
PG	9.392	21.030	21.030	21.030	21.030	21.030	21.030	21.030	21.030	21.030	21.030	21.030
RMG	9.387	20.972	20.972	20.972	20.972	20.972	20.972	20.972	20.972	20.972	20.972	20.972
RG	9.200	18.768	18.768	18.768	18.768	18.768	18.768	18.768	18.768	18.768	18.768	18.768
RF	9.192	18.679	18.679	18.679	18.679	18.679	18.679	18.679	18.679	18.679	18.679	18.679

SPAN 10	INCR. DIST.	0	1	2	3	4	5	6	7	8	9	10
		FINISHED GRADE ELEVATIONS AT POINTS										
GDR 1	9.573	23.176	23.164	23.154	23.147	23.143	23.142	23.143	23.147	23.154	23.164	23.176
GDR 2	9.527	22.840	22.827	22.818	22.811	22.807	22.806	22.807	22.811	22.818	22.827	22.840
GDR 3	9.482	22.103	22.091	22.081	22.075	22.071	22.069	22.071	22.075	22.081	22.091	22.103
GDR 4	9.436	21.567	21.554	21.545	21.538	21.534	21.533	21.534	21.538	21.545	21.554	21.567
GDR 5	9.391	21.030	21.018	21.009	21.002	20.998	20.997	20.998	21.002	21.009	21.018	21.030
GDR 6	9.345	20.493	20.482	20.472	20.466	20.462	20.460	20.462	20.466	20.472	20.482	20.494
GDR 7	9.300	19.957	19.945	19.936	19.929	19.925	19.924	19.925	19.929	19.936	19.945	19.957
GDR 8	9.254	19.420	19.409	19.399	19.393	19.389	19.388	19.389	19.393	19.399	19.409	19.420
GDR 9	9.209	18.884	18.872	18.863	18.856	18.852	18.851	18.852	18.856	18.863	18.872	18.884

SPAN 10	INCR. DIST.	0	1	2	3	4	5	6	7	8	9	10
		FINISHED GRADE ELEVATIONS AT POINTS										
LF	9.591	23.381	23.381	23.381	23.381	23.381	23.381	23.381	23.381	23.381	23.381	23.381
LG	9.583	23.292	23.292	23.292	23.292	23.292	23.292	23.292	23.292	23.292	23.292	23.292
LMG	9.397	21.088	21.088	21.088	21.088	21.088	21.088	21.088	21.088	21.088	21.088	21.088
PG	9.392	21.030	21.030	21.030	21.030	21.030	21.030	21.030	21.030	21.030	21.030	21.030
RMG	9.387	20.972	20.972	20.972	20.972	20.972	20.972	20.972	20.972	20.972	20.972	20.972
RG	9.200	18.768	18.768	18.768	18.768	18.768	18.768	18.768	18.768	18.768	18.768	18.768
RF	9.192	18.679	18.679	18.679	18.679	18.679	18.679	18.679	18.679	18.679	18.679	18.679

SPAN 11	INCR. DIST.	0	1	2	3	4	5	6	7	8	9	10
		FINISHED GRADE ELEVATIONS AT POINTS										
GDR 1	9.573	23.176	23.164	23.154	23.147	23.143	23.112	23.028	22.943	22.861	22.782	22.705
GDR 2	9.527	22.839	22.827	22.818	22.811	22.807	22.581	22.510	22.441	22.375	22.311	22.249
GDR 3	9.482	22.103	22.091	22.081	22.075	22.071	22.050	21.994	21.940	21.889	21.840	21.792
GDR 4	9.436	21.567	21.554	21.545	21.538	21.534	21.518	21.477	21.439	21.403	21.368	21.336
GDR 5	9.391	21.030	21.018	21.009	21.002	20.998	20.987	20.961	20.938	20.918	20.897	20.879
GDR 6	9.345	20.494	20.482	20.472	20.466	20.462	20.456	20.445	20.437	20.430	20.426	20.423
GDR 7	9.300	19.957	19.945	19.936	19.929	19.925	19.925	19.929	19.935	19.944	19.954	19.967
GDR 8	9.254	19.420	19.409	19.399	19.393	19.389	19.394	19.413	19.434	19.458	19.483	19.510
GDR 9	9.209	18.884	18.872	18.863	18.856	18.852	18.862	18.896	18.933	18.971	19.012	19.054

SPAN 11	INCR. DIST.	0	1	2	3	4	5	6	7	8	9	10
		FINISHED GRADE ELEVATIONS AT POINTS										
LF	9.591	23.381	23.381	23.381	23.381	23.381	23.349	23.255	23.161	23.067	22.974	22.880
LG	9.583	23.292	23.292	23.292	23.292	23.292	23.281	23.189	23.076	22.986	22.895	22.804
LMG	9.397	21.088	21.088	21.088	21.088	21.088	21.078	21.048	21.018	20.988	20.959	20.929
PG	9.392	21.030	21.030	21.030	21.030	21.030	21.020	20.992	20.964	20.936	20.908	20.879
RMG	9.387	20.972	20.972	20.972	20.972	20.972	20.963	20.936	20.910	20.883	20.857	20.830
RG	9.200	18.768	18.768	18.768	18.768	18.768	18.780	18.815	18.850	18.885	18.920	18.955
RF	9.192	18.679	18.679	18.679	18.679	18.679	18.691	18.729	18.767	18.804	18.842	18.879

SPAN 12	INCR. DIST.	0	1	2	3	4	5	6	7	8	9	10
		FINISHED GRADE ELEVATIONS AT POINTS										
GDR 1	9.469	22.705	22.611	22.520	22.432	22.345	22.259	22.172	22.085	21.998	21.910	21.823
GDR 2	9.450	22.249	22.170	22.093	22.019	21.947	21.876	21.804	21.733	21.661	21.589	21.517
GDR 3	9.430	21.792	21.728	21.668	21.607	21.550	21.494	21.437	21.381	21.324	21.267	21.210
GDR 4	9.411	21.336	21.286	21.240	21.195	21.153	21.112	21.070	21.029	20.988	20.946	20.904
GDR 5	9.391	20.879	20.845	20.813	20.784	20.756	20.730	20.704	20.677	20.651	20.624	20.598
GDR 6	9.372	20.423	20.404	20.387	20.372	20.360	20.349	20.337	20.326	20.315	20.303	20.291
GDR 7	9.353	19.967	19.962	19.961	19.961	19.964	19.967	19.971	19.975	19.978	19.982	19.985
GDR 8	9.333	19.510	19.521	19.534	19.550	19.568	19.587	19.605	19.624	19.642	19.661	19.679
GDR 9	9.314	19.054	19.080	19.109	19.139	19.172	19.206	19.240	19.273	19.306	19.340	19.373

SPAN 12	INCR. DIST.	0	1	2	3	4	5	6	7	8	9	10
		FINISHED GRADE ELEVATIONS AT POINTS										
LF	9.477	22.880	22.787	22.694	22.601	22.508	22.414	22.319	22.225	22.130	22.035	21.940
LG	9.473	22.804	22.713	22.623	22.532	22.442	22.350	22.258	22.166	22.074	21.981	21.889
LMG	9.394	20.929	20.899	20.869	20.839	20.810	20.780	20.750	20.720	20.690	20.661	20.631
PG	9.392	20.879	20.851	20.823	20.795	20.767	20.739	20.710	20.682	20.654	20.628	20.598
RMG	9.390	20.830	20.804	20.777	20.750	20.724	20.697	20.671	20.644	20.618	20.591	20.565
RG	9.310	18.955	18.991	19.026	19.062	19.097	19.132	19.167	19.202	19.237	19.272	19.306
RF	9.307	18.879	18.917	18.956	18.994	19.032	19.069	19.106	19.144	19.181	19.218	19.255

SPAN 13	INCR. DIST.	0	1	2	3	4	5	6	7	8	9	10
		FINISHED GRADE ELEVATIONS AT POINTS										
GDR 1	9.392	21.823	21.735	21.647	21.558	21.470	21.382	21.294	21.206	21.117	21.029	20.940
GDR 2	9.392	21.517	21.443	21.370	21.297	21.224	21.151	21.077	21.004	20.931	20.858	20.784
GDR 3	9.392	21.210	21.152	21.094	21.036	20.978	20.919	20.861	20.803	20.745	20.686	20.628
GDR 4	9.392	20.904	20.861	20.818	20.775	20.731	20.688	20.645	20.602	20.559	20.515	20.472
GDR 5	9.392	20.598	20.570	20.541	20.513	20.485	20.457	20.429	20.401	20.372	20.344	20.316
GDR 6	9.392	20.291	20.278	20.265	20.252	20.239	20.226	20.212	20.199	20.186	20.159	20.131
GDR 7	9.392	19.985	19.987	19.989	19.991	19.993	19.994	19.996	19.998	20.000	19.974	19.948
GDR 8	9.392	19.679	19.696	19.713	19.729	19.746	19.763	19.780	19.797	19.814	19.789	19.761
GDR 9	9.392	19.375	19.404	19.436	19.468	19.500	19.532	19.564	19.595	19.627	19.604	19.578

SPAN 13	INCR. DIST.	0	1	2	3	4	5	6	7	8	9	10
		FINISHED GRADE ELEVATIONS AT POINTS										
LF	9.392	21.940	21.846	21.752	21.658	21.564	21.470	21.377	21.283	21.189	21.094	21.000
LG	9.392	21.889	21.798	21.706	21.615	21.523	21.432	21.341	21.249	21.158	21.066	20.974
LMG	9.392	20.631	20.601	20.571	20.541	20.512	20.482	20.452	20.422	20.392	20.363	20.333
PG	9.392	20.598	20.570	20.541	20.513	20.485	20.457	20.429	20.401	20.372	20.344	20.316
RMG	9.392	20.565	20.538	20.512	20.485	20.458	20.432	20.405	20.379	20.352	20.324	20.296
RG	9.392	19.306	19.341	19.377	19.412	19.447	19.482	19.517	19.552	19.587	19.564	19.536
RF	9.392	19.255	19.293	19.330	19.368	19.406	19.443	19.481	19.518	19.556	19.533	19.505

SPAN 14	INCR. DIST.	0	1	2	3	4	5	6	7	8	9	10
		FINISHED GRADE ELEVATIONS AT POINTS										
GDR 1	9.392	20.940	20.852	20.763	20.674	20.586	20.497	20.409	20.320	20.231	20.143	20.054
GDR 2	9.392	20.784	20.711	20.637	20.564	20.490	20.417	20.343	20.270	20.196	20.123	20.049
GDR 3	9.392	20.628	20.570	20.511	20.453	20.395	20.336	20.278	20.219	20.161	20.103	20.044
GDR 4	9.392	20.472	20.429	20.385	20.342	20.299	20.256	20.212	20.169	20.126	20.082	20.039
GDR 5	9.392	20.316	20.288	20.260	20.231	20.203	20.175	20.147	20.119	20.091	20.062	20.034
GDR 6	9.392	20.131	20.103	20.075	20.046	20.018	19.990	19.962	19.934	19.906	19.877	19.849
GDR 7	9.392	19.946	19.918	19.890	19.861	19.833	19.805	19.777	19.749	19.721	19.692	19.664
GDR 8	9.392	19.761	19.733	19.705	19.676	19.648	19.620	19.592	19.564	19.536	19.507	19.479
GDR 9	9.392	19.576	19.548	19.520	19.491	19.463	19.435	19.407	19.379	19.351	19.322	19.294

SPAN 14	INCR. DIST.	0	1	2	3	4	5	6	7	8	9	10
		FINISHED GRADE ELEVATIONS AT POINTS										
LF	9.392	21.000	20.906	20.811	20.717	20.622	20.528	20.434	20.339	20.245	20.150	20.056
LG	9.392	20.974	20.882	20.790	20.698	20.606	20.515	20.423	20.331	20.239	20.147	20.055
LMG	9.392	20.333	20.303	20.273	20.243	20.214	20.184	20.154	20.124	20.094	20.065	20.035
PG	9.392	20.316	20.288	20.260	20.231	20.203	20.175	20.147	20.119	20.091	20.062	20.034
RMG	9.392	20.296	20.268	20.240	20.211	20.183	20.155	20.127	20.099	20.071	20.042	20.014
RG	9.392	19.536	19.508	19.480	19.451	19.423	19.395	19.367	19.339	19.311	19.282	19.254
RF	9.392	19.505	19.477	19.449	19.421	19.392	19.364	19.336	19.308	19.280	19.252	19.223

SPAN 15	INCR. DIST.	0	1	2	3	4	5	6	7	8	9	10
		FINISHED GRADE ELEVATIONS AT POINTS										
GDR 1	9.392	20.054	19.965	19.877	19.788	19.700	19.611	19.522	19.434	19.345	19.257	19.168
GDR 2	9.392	20.049	19.976	19.902	19.829	19.755	19.682	19.608	19.535	19.461	19.388	19.314
GDR 3	9.392	20.044	19.986	19.927	19.869	19.811	19.752	19.694	19.635	19.577	19.519	19.460
GDR 4	9.392	20.039	19.996	19.953	19.909	19.866	19.823	19.780	19.736	19.693	19.650	19.606
GDR 5	9.392	20.034	20.006	19.978	19.950	19.922	19.893	19.865	19.837	19.809	19.781	19.753
GDR 6	9.392	19.849	19.821	19.793	19.765	19.737	19.708	19.680	19.652	19.624	19.596	19.568
GDR 7	9.392	19.664	19.636	19.608	19.580	19.552	19.523	19.495	19.467	19.439	19.411	19.383
GDR 8	9.392	19.479	19.451	19.423	19.395	19.367	19.338	19.310	19.282	19.254	19.226	19.198
GDR 9	9.392	19.294	19.266	19.238	19.210	19.182	19.153	19.125	19.097	19.069	19.041	19.013

SPAN 15	INCR. DIST.	0	1	2	3	4	5	6	7	8	9	10
		FINISHED GRADE ELEVATIONS AT POINTS										
LF	9.392	20.056	19.962	19.867	19.773	19.678	19.584	19.490	19.395	19.301	19.206	19.112
LG	9.392	20.055	19.963	19.871	19.780	19.688	19.596	19.504	19.412	19.320	19.228	19.136
LMG	9.392	20.035	20.005	19.975	19.945	19.916	19.886	19.856	19.826	19.796	19.767	19.737
PG	9.392	20.034	20.006	19.978	19.950	19.922	19.893	19.865	19.837	19.809	19.781	19.753
RMG	9.392	20.014	19.986	19.958	19.930	19.902	19.873	19.845	19.817	19.789	19.761	19.733
RG	9.392	19.254	19.226	19.198	19.170	19.142	19.113	19.085	19.057	19.029	19.001	18.973
RF	9.392	19.223	19.195	19.167	19.139	19.111	19.083	19.054	19.026	18.998	18.970	18.942

SPAN 16	INCR. DIST.	0	1	2	3	4	5	6	7	8	9	10
		FINISHED GRADE ELEVATIONS AT POINTS										
GDR 1	9.392	19.168	19.079	18.991	18.928	18.900	18.872	18.843	18.815	18.790	18.790	18.790
GDR 2	9.392	19.314	19.241	19.167	19.113	19.085	19.057	19.028	19.000	18.975	18.975	18.975
GDR 3	9.392	19.460	19.402	19.343	19.298	19.270	19.242	19.213	19.185	19.160	19.160	19.160
GDR 4	9.392	19.606	19.563	19.520	19.483	19.455	19.427	19.398	19.370	19.345	19.345	19.345
GDR 5	9.392	19.753	19.724	19.696	19.668	19.640	19.612	19.583	19.555	19.530	19.530	19.530
GDR 6	9.392	19.568	19.539	19.511	19.483	19.455	19.427	19.398	19.370	19.345	19.345	19.345
GDR 7	9.392	19.383	19.354	19.326	19.298	19.270	19.242	19.213	19.185	19.160	19.160	19.160
GDR 8	9.392	19.198	19.169	19.141	19.113	19.085	19.057	19.028	19.000	18.975	18.975	18.975
GDR 9	9.392	19.013	18.984	18.956	18.928	18.900	18.872	18.843	18.815	18.790	18.790	18.790

SPAN 16	INCR. DIST.	0	1	2	3	4	5	6	7	8	9	10
		FINISHED GRADE ELEVATIONS AT POINTS										
LF	9.392	19.112	19.018	18.923	18.857	18.829	18.801	18.773	18.744	18.719	18.719	18.719
LG	9.392	19.136	19.045	18.953	18.888	18.860	18.832	18.803	18.775	18.750	18.750	18.750
LMG	9.392	19.737	19.707	19.677	19.648	19.620	19.592	19.563	19.535	19.510	19.510	19.510
PG	9.392	19.753	19.724	19.696	19.668	19.640	19.612	19.583	19.555	19.530	19.530	19.530
RMG	9.392	19.733	19.704	19.676	19.648	19.620	19.592	19.563	19.535	19.510	19.510	19.510
RG	9.392	18.973	18.944	18.916	18.888	18.860	18.832	18.803	18.775	18.750	18.750	18.750
RF	9.392	18.942	18.913	18.885	18.857	18.829	18.801	18.773	18.744	18.719	18.719	18.719

REVISIONS

DATE	BY	DESCRIPTION	DATE	BY	DESCRIPTION	DATE	BY	DESCRIPTION	DATE	BY	DESCRIPTION

	NAME	DATE
DR.BY	MDD	5/93
CHK.BY	REJ	8/93
SUPV.	REJ	7/93

Greiner
Greiner, Inc.
Engineers, Architects and Planners

BOARD OF COUNTY COMMISSIONERS
LEE COUNTY, FLORIDA
DEPARTMENT OF TRANSPORTATION

MIDPOINT BRIDGE
FINISH GRADE ELEVATIONS (7)

FRLEECTY

PROJECT NO.	SHEET NO
5896	C-58

BX1-68

DISK#DRAW; C261000.CADD.FG BDKEWP08.FGBJ

SPAN 17	INCR. DIST.	0	1	2	3	4	5	6	7	8	9	10
		FINISHED GRADE ELEVATIONS AT POINTS										
GDR 1	9.392	18.790	18.790	18.790	18.790	18.790	18.790	18.790	18.790	18.790	18.790	18.790
GDR 2	9.392	18.975	18.975	18.975	18.975	18.975	18.975	18.975	18.975	18.975	18.975	18.975
GDR 3	9.392	19.160	19.160	19.160	19.160	19.160	19.160	19.160	19.160	19.160	19.160	19.160
GDR 4	9.392	19.345	19.345	19.345	19.345	19.345	19.345	19.345	19.345	19.345	19.345	19.345
GDR 5	9.392	19.530	19.530	19.530	19.530	19.530	19.530	19.530	19.530	19.530	19.530	19.530
GDR 6	9.392	19.345	19.345	19.345	19.345	19.345	19.345	19.345	19.345	19.345	19.345	19.345
GDR 7	9.392	19.160	19.160	19.160	19.160	19.160	19.160	19.160	19.160	19.160	19.160	19.160
GDR 8	9.392	18.975	18.975	18.975	18.975	18.975	18.975	18.975	18.975	18.975	18.975	18.975
GDR 9	9.392	18.790	18.790	18.790	18.790	18.790	18.790	18.790	18.790	18.790	18.790	18.790

SPAN 17	INCR. DIST.	0	1	2	3	4	5	6	7	8	9	10
		FINISHED GRADE ELEVATIONS AT POINTS										
LF	9.392	18.719	18.719	18.719	18.719	18.719	18.719	18.719	18.719	18.719	18.719	18.719
LG	9.392	18.750	18.750	18.750	18.750	18.750	18.750	18.750	18.750	18.750	18.750	18.750
LMG	9.392	19.510	19.510	19.510	19.510	19.510	19.510	19.510	19.510	19.510	19.510	19.510
PG	9.392	19.530	19.530	19.530	19.530	19.530	19.530	19.530	19.530	19.530	19.530	19.530
RMG	9.392	19.510	19.510	19.510	19.510	19.510	19.510	19.510	19.510	19.510	19.510	19.510
RG	9.392	18.750	18.750	18.750	18.750	18.750	18.750	18.750	18.750	18.750	18.750	18.750
RF	9.392	18.719	18.719	18.719	18.719	18.719	18.719	18.719	18.719	18.719	18.719	18.719

SPAN 18	INCR. DIST.	0	1	2	3	4	5	6	7	8	9	10
		FINISHED GRADE ELEVATIONS AT POINTS										
GDR 1	9.392	18.790	18.790	18.790	18.790	18.790	18.790	18.790	18.790	18.790	18.790	18.790
GDR 2	9.392	18.975	18.975	18.975	18.975	18.975	18.975	18.975	18.975	18.975	18.975	18.975
GDR 3	9.392	19.160	19.160	19.160	19.160	19.160	19.160	19.160	19.160	19.160	19.160	19.160
GDR 4	9.392	19.345	19.345	19.345	19.345	19.345	19.345	19.345	19.345	19.345	19.345	19.345
GDR 5	9.392	19.530	19.530	19.530	19.530	19.530	19.530	19.530	19.530	19.530	19.530	19.530
GDR 6	9.392	19.345	19.345	19.345	19.345	19.345	19.345	19.345	19.345	19.345	19.345	19.345
GDR 7	9.392	19.160	19.160	19.160	19.160	19.160	19.160	19.160	19.160	19.160	19.160	19.160
GDR 8	9.392	18.975	18.975	18.975	18.975	18.975	18.975	18.975	18.975	18.975	18.975	18.975
GDR 9	9.392	18.790	18.790	18.790	18.790	18.790	18.790	18.790	18.790	18.790	18.790	18.790

SPAN 18	INCR. DIST.	0	1	2	3	4	5	6	7	8	9	10
		FINISHED GRADE ELEVATIONS AT POINTS										
LF	9.392	18.719	18.719	18.719	18.719	18.719	18.719	18.719	18.719	18.719	18.719	18.719
LG	9.392	18.750	18.750	18.750	18.750	18.750	18.750	18.750	18.750	18.750	18.750	18.750
LMG	9.392	19.510	19.510	19.510	19.510	19.510	19.510	19.510	19.510	19.510	19.510	19.510
PG	9.392	19.530	19.530	19.530	19.530	19.530	19.530	19.530	19.530	19.530	19.530	19.530
RMG	9.392	19.510	19.510	19.510	19.510	19.510	19.510	19.510	19.510	19.510	19.510	19.510
RG	9.392	18.750	18.750	18.750	18.750	18.750	18.750	18.750	18.750	18.750	18.750	18.750
RF	9.392	18.719	18.719	18.719	18.719	18.719	18.719	18.719	18.719	18.719	18.719	18.719

SPAN 19	INCR. DIST.	0	1	2	3	4	5	6	7	8	9	10
		FINISHED GRADE ELEVATIONS AT POINTS										
GDR 1	9.392	18.790	18.790	18.790	18.790	18.790	18.790	18.790	18.790	18.790	18.790	18.790
GDR 2	9.392	18.975	18.975	18.975	18.975	18.975	18.975	18.975	18.975	18.975	18.975	18.975
GDR 3	9.392	19.160	19.160	19.160	19.160	19.160	19.160	19.160	19.160	19.160	19.160	19.160
GDR 4	9.392	19.345	19.345	19.345	19.345	19.345	19.345	19.345	19.345	19.345	19.345	19.345
GDR 5	9.392	19.530	19.530	19.530	19.530	19.530	19.530	19.530	19.530	19.530	19.530	19.530
GDR 6	9.392	19.345	19.345	19.345	19.345	19.345	19.345	19.345	19.345	19.345	19.345	19.345
GDR 7	9.392	19.160	19.160	19.160	19.160	19.160	19.160	19.160	19.160	19.160	19.160	19.160
GDR 8	9.392	18.975	18.975	18.975	18.975	18.975	18.975	18.975	18.975	18.975	18.975	18.975
GDR 9	9.392	18.790	18.790	18.790	18.790	18.790	18.790	18.790	18.790	18.790	18.790	18.790

SPAN 19	INCR. DIST.	0	1	2	3	4	5	6	7	8	9	10
		FINISHED GRADE ELEVATIONS AT POINTS										
LF	9.392	18.719	18.719	18.719	18.719	18.719	18.719	18.719	18.719	18.719	18.719	18.719
LG	9.392	18.750	18.750	18.750	18.750	18.750	18.750	18.750	18.750	18.750	18.750	18.750
LMG	9.392	19.510	19.510	19.510	19.510	19.510	19.510	19.510	19.510	19.510	19.510	19.510
PG	9.392	19.530	19.530	19.530	19.530	19.530	19.530	19.530	19.530	19.530	19.530	19.530
RMG	9.392	19.510	19.510	19.510	19.510	19.510	19.510	19.510	19.510	19.510	19.510	19.510
RG	9.392	18.750	18.750	18.750	18.750	18.750	18.750	18.750	18.750	18.750	18.750	18.750
RF	9.392	18.719	18.719	18.719	18.719	18.719	18.719	18.719	18.719	18.719	18.719	18.719

SPAN 20	INCR. DIST.	0	1	2	3	4	5	6	7	8	9	10
		FINISHED GRADE ELEVATIONS AT POINTS										
GDR 1	9.392	18.790	18.790	18.790	18.790	18.790	18.790	18.790	18.790	18.790	18.790	18.790
GDR 2	9.392	18.975	18.975	18.975	18.975	18.975	18.975	18.975	18.975	18.975	18.975	18.975
GDR 3	9.392	19.160	19.160	19.160	19.160	19.160	19.160	19.160	19.160	19.160	19.160	19.160
GDR 4	9.392	19.345	19.345	19.345	19.345	19.345	19.345	19.345	19.345	19.345	19.345	19.345
GDR 5	9.392	19.530	19.530	19.530	19.530	19.530	19.530	19.530	19.530	19.530	19.530	19.530
GDR 6	9.392	19.345	19.345	19.345	19.345	19.345	19.345	19.345	19.345	19.345	19.345	19.345
GDR 7	9.392	19.160	19.160	19.160	19.160	19.160	19.160	19.160	19.160	19.160	19.160	19.160
GDR 8	9.392	18.975	18.975	18.975	18.975	18.975	18.975	18.975	18.975	18.975	18.975	18.975
GDR 9	9.392	18.790	18.790	18.790	18.790	18.790	18.790	18.790	18.790	18.790	18.790	18.790

SPAN 20	INCR. DIST.	0	1	2	3	4	5	6	7	8	9	10
		FINISHED GRADE ELEVATIONS AT POINTS										
LF	9.392	18.719	18.719	18.719	18.719	18.719	18.719	18.719	18.719	18.719	18.719	18.719
LG	9.392	18.750	18.750	18.750	18.750	18.750	18.750	18.750	18.750	18.750	18.750	18.750
LMG	9.392	19.510	19.510	19.510	19.510	19.510	19.510	19.510	19.510	19.510	19.510	19.510
PG	9.392	19.530	19.530	19.530	19.530	19.530	19.530	19.530	19.530	19.530	19.530	19.530
RMG	9.392	19.510	19.510	19.510	19.510	19.510	19.510	19.510	19.510	19.510	19.510	19.510
RG	9.392	18.750	18.750	18.750	18.750	18.750	18.750	18.750	18.750	18.750	18.750	18.750
RF	9.392	18.719	18.719	18.719	18.719	18.719	18.719	18.719	18.719	18.719	18.719	18.719

SPAN 21	INCR. DIST.	0	1	2	3	4	5	6	7	8	9	10
		FINISHED GRADE ELEVATIONS AT POINTS										
GDR 1	9.392	18.790	18.790	18.790	18.790	18.790	18.790	18.790	18.790	18.790	18.790	18.790
GDR 2	9.392	18.975	18.975	18.975	18.975	18.975	18.975	18.975	18.975	18.975	18.975	18.975
GDR 3	9.392	19.160	19.160	19.160	19.160	19.160	19.160	19.160	19.160	19.160	19.160	19.160
GDR 4	9.392	19.345	19.345	19.345	19.345	19.345	19.345	19.345	19.345	19.345	19.345	19.345
GDR 5	9.392	19.530	19.530	19.530	19.530	19.530	19.530	19.530	19.530	19.530	19.530	19.530
GDR 6	9.392	19.345	19.345	19.345	19.345	19.345	19.345	19.345	19.345	19.345	19.345	19.345
GDR 7	9.392	19.160	19.160	19.160	19.160	19.160	19.160	19.160	19.160	19.160	19.160	19.160
GDR 8	9.392	18.975	18.975	18.975	18.975	18.975	18.975	18.975	18.975	18.975	18.975	18.975
GDR 9	9.392	18.790	18.790	18.790	18.790	18.790	18.790	18.790	18.790	18.790	18.790	18.790

SPAN 21	INCR. DIST.	0	1	2	3	4	5	6	7	8	9	10
		FINISHED GRADE ELEVATIONS AT POINTS										
LF	9.392	18.719	18.719	18.719	18.719	18.719	18.719	18.719	18.719	18.719	18.719	18.719
LG	9.392	18.750	18.750	18.750	18.750	18.750	18.750	18.750	18.750	18.750	18.750	18.750
LMG	9.392	19.510	19.510	19.510	19.510	19.510	19.510	19.510	19.510	19.510	19.510	19.510
PG	9.392	19.530	19.530	19.530	19.530	19.530	19.530	19.530	19.530	19.530	19.530	19.530
RMG	9.392	19.510	19.510	19.510	19.510	19.510	19.510	19.510	19.510	19.510	19.510	19.510
RG	9.392	18.750	18.750	18.750	18.750	18.750	18.750	18.750	18.750	18.750	18.750	18.750
RF	9.392	18.719	18.719	18.719	18.719	18.719	18.719	18.719	18.719	18.719	18.719	18.719

SPAN 22	INCR. DIST.	0	1	2	3	4	5	6	7	8	9	10
		FINISHED GRADE ELEVATIONS AT POINTS										
GDR 1	9.392	18.790	18.790	18.790	18.790	18.790	18.790	18.790	18.790	18.790	18.790	18.790
GDR 2	9.392	18.975	18.975	18.975	18.975	18.975	18.975	18.975	18.975	18.975	18.975	18.975
GDR 3	9.392	19.160	19.160	19.160	19.160	19.160	19.160	19.160	19.160	19.160	19.160	19.160
GDR 4	9.392	19.345	19.345	19.345	19.345	19.345	19.345	19.345	19.345	19.345	19.345	19.345
GDR 5	9.392	19.530	19.530	19.530	19.530	19.530	19.530	19.530	19.530	19.530	19.530	19.530
GDR 6	9.392	19.345	19.345	19.345	19.345	19.345	19.345	19.345	19.345	19.345	19.345	19.345
GDR 7	9.392	19.160	19.160	19.160	19.160	19.160	19.160	19.160	19.160	19.160	19.160	19.160
GDR 8	9.392	18.975	18.975	18.975	18.975	18.975	18.975	18.975	18.975	18.975	18.975	18.975
GDR 9	9.392	18.790	18.790	18.790	18.790	18.790	18.790	18.790	18.790	18.790	18.790	18.790

SPAN 22	INCR. DIST.	0	1	2	3	4	5	6	7	8	9	10
		FINISHED GRADE ELEVATIONS AT POINTS										
LF	9.392	18.719	18.719	18.719	18.719	18.719	18.719	18.719	18.719	18.719	18.719	18.719
LG	9.392	18.750	18.750	18.750	18.750	18.750	18.750	18.750	18.750	18.750	18.750	18.750
LMG	9.392	19.510	19.510	19.510	19.510	19.510	19.510	19.510	19.510	19.510	19.510	19.510
PG	9.392	19.530	19.530	19.530	19.530	19.530	19.530	19.530	19.530	19.530	19.530	19.530
RMG	9.392	19.510	19.510	19.510	19.510	19.510	19.510	19.510	19.510	19.510	19.510	19.510
RG	9.392	18.750	18.750	18.750	18.750	18.750	18.750	18.750	18.750	18.750	18.750	18.750
RF	9.392	18.719	18.719	18.719	18.719	18.719	18.719	18.719	18.719	18.719	18.719	18.719

SPAN 23	INCR. DIST.	0	1	2	3	4	5	6	7	8	9	10
		FINISHED GRADE ELEVATIONS AT POINTS										
GDR 1	9.392	18.790	18.790	18.790	18.790	18.790	18.790	18.790	18.790	18.790	18.790	18.790
GDR 2	9.392	18.975	18.975	18.975	18.975	18.975	18.975	18.975	18.975	18.975	18.975	18.975
GDR 3	9.392	19.160	19.160	19.160	19.160	19.160	19.160	19.160	19.160	19.160	19.160	19.160
GDR 4	9.392	19.345	19.345	19.345	19.345	19.345	19.345	19.345	19.345	19.345	19.345	19.345
GDR 5	9.392	19.530	19.530	19.530	19.530	19.530	19.530	19.530	19.530	19.530	19.530	19.530
GDR 6	9.392	19.345	19.345	19.345	19.345	19.345	19.345	19.345	19.345	19.345	19.345	19.345
GDR 7	9.392	19.160	19.160	19.160	19.160	19.160	19.160	19.160	19.160	19.160	19.160	19.160
GDR 8	9.392	18.975	18.975	18.975	18.975	18.975	18.975	18.975	18.975	18.975	18.975	18.975
GDR 9	9.392	18.790	18.790	18.790	18.790	18.790	18.790	18.790	18.790	18.790	18.790	18.790

SPAN 23	INCR. DIST.	0	1	2	3	4	5	6	7	8	9	10
		FINISHED GRADE ELEVATIONS AT POINTS										
LF	9.392	18.719	18.719	18.719	18.719	18.719	18.719	18.719	18.719	18.719	18.719	18.719
LG	9.392	18.750	18.750	18.750	18.750	18.750	18.750	18.750	18.750	18.750	18.750	18.750
LMG	9.392	19.510	19.510	19.510	19.510	19.510	19.510	19.510	19.510	19.510	19.510	19.510
PG	9.392	19.530	19.530	19.530	19.530	19.530	19.530	19.530	19.530	19.530	19.530	19.530
RMG	9.392	19.510	19.510	19.510	19.510	19.510	19.510	19.510	19.510	19.510	19.510	19.510
RG	9.392	18.750	18.750	18.750	18.750	18.750	18.750	18.750	18.750	18.750	18.750	18.750
RF	9.392	18.719	18.719	18.719	18.719	18.719	18.719	18.719	18.719	18.719	18.719	18.719

SPAN 24	INCR. DIST.	0	1	2	3	4	5	6	7	8	9	10
		FINISHED GRADE ELEVATIONS AT POINTS										
GDR 1	9.392	18.790	18.790	18.790	18.790	18.790	18.790	18.790	18.790	18.790	18.790	18.790
GDR 2	9.392	18.975	18.975	18.975	18.975	18.975	18.975	18.975	18.975	18.975	18.975	18.975
GDR 3	9.392	19.160	19.160	19.160	19.160	19.160	19.160	19.160	19.160	19.160	19.160	19.160
GDR 4	9.392	19.345	19.345	19.345	19.345	19.345	19.345	19.345	19.345	19.345	19.345	19.345
GDR 5	9.392	19.530	19.530	19.530	19.530	19.530	19.530	19.530	19.530	19.530	19.530	19.530
GDR 6	9.392	19.345	19.345	19.345	19.345	19.345	19.345	19.345	19.345	19.345	19.345	19.345
GDR 7	9.392	19.160	19.160	19.160	19.160	19.160	19.160	19.160	19.160	19.160	19.160	19.160
GDR 8	9.392	18.975	18.975	18.975	18.975	18.975	18.975	18.975	18.975	18.975	18.975	18.975
GDR 9	9.392	18.790	18.790	18.790	18.790	18.790	18.790	18.790	18.790	18.790	18.790	18.790

SPAN 24	INCR. DIST.	0	1	2	3	4	5	6	7	8	9	10
		FINISHED GRADE ELEVATIONS AT POINTS										
LF	9.392	18.719	18.719	18.719	18.719	18.719	18.719	18.719	18.719	18.719	18.719	18.719
LG	9.392	18.750	18.750	18.750	18.750	18.750	18.750	18.750	18.750	18.750	18.750	18.750
LMG	9.392	19.510	19.510	19.510	19.510	19.510	19.510	19.510	19.510	19.510	19.510	19.510
PG	9.392	19.530	19.530	19.530	19.530	19.530	19.530	19.530	19.530	19.530	19.530	19.530
RMG	9.392	19.510	19.510	19.510	19.510	19.510	19.510	19.510	19.510	19.510	19.510	19.510
RG	9.392	18.750	18.750	18.750	18.750	18.750	18.750	18.750	18.750	18.750	18.750	18.750
RF	9.392	18.719	18.719	18.719	18.719	18.719	18.719	18.719	18.719	18.719	18.719	18.719

REVISIONS

DATE	BY	DESCRIPTION	DATE	BY	DESCRIPTION	DATE	BY	DESCRIPTION	DATE	BY	DESCRIPTION

FRLEECTY

	NAME	DATE
DR. BY	MDO	5/93
CHK. BY	REJ	6/93
SUPV.	REJ	7/93

Greiner
Greiner, Inc.
Tampa, Florida
Engineers, Architects and Planners

BOARD OF COUNTY COMMISSIONERS
LEE COUNTY, FLORIDA
DEPARTMENT OF TRANSPORTATION

MIDPOINT BRIDGE
FINISH GRADE ELEVATIONS (8)

PROJECT NO	SHEET NO
5896	C-59A

BX1-69

SPAN 25 INCR. FINISHED GRADE ELEVATIONS AT POINTS

	DIST.	0	1	2	3	4	5	6	7	F	8	9	10
GDR 1	9.392	18.790	18.790	18.790	18.790	18.790	18.790	18.790	18.790	F	18.790	18.790	18.790
GDR 2	9.392	18.975	18.975	18.975	18.975	18.975	18.975	18.975	18.975	F	18.975	18.975	18.975
GDR 3	9.392	19.160	19.160	19.160	19.160	19.160	19.160	19.160	19.160	F	19.160	19.160	19.160
GDR 4	9.392	19.345	19.345	19.345	19.345	19.345	19.345	19.345	19.345	F	19.345	19.345	19.345
GDR 5	9.392	19.530	19.530	19.530	19.530	19.530	19.530	19.530	19.530	F	19.530	19.530	19.530
GDR 6	9.392	19.345	19.345	19.345	19.345	19.345	19.345	19.345	19.345	F	19.345	19.345	19.345
GDR 7	9.392	19.160	19.160	19.160	19.160	19.160	19.160	19.160	19.160	F	19.160	19.160	19.160
GDR 8	9.392	18.975	18.975	18.975	18.975	18.975	18.975	18.975	18.975	F	18.975	18.975	18.975
GDR 9	9.392	18.790	18.790	18.790	18.790	18.790	18.790	18.790	18.790	F	18.790	18.790	18.790

SPAN 25 INCR. FINISHED GRADE ELEVATIONS AT POINTS

	DIST.	0	1	2	3	4	5	6	7	F	8	9	10
LF	9.392	18.719	18.719	18.719	18.719	18.719	18.719	18.719	18.719	F	18.719	18.719	18.719
LG	9.392	18.750	18.750	18.750	18.750	18.750	18.750	18.750	18.750	F	18.750	18.750	18.750
LWG	9.392	19.510	19.510	19.510	19.510	19.510	19.510	19.510	19.510	F	19.510	19.510	19.510
PG	9.392	19.530	19.530	19.530	19.530	19.530	19.530	19.530	19.530	F	19.530	19.530	19.530
RWG	9.392	19.510	19.510	19.510	19.510	19.510	19.510	19.510	19.510	F	19.510	19.510	19.510
RG	9.392	18.750	18.750	18.750	18.750	18.750	18.750	18.750	18.750	F	18.750	18.750	18.750
RF	9.392	18.719	18.719	18.719	18.719	18.719	18.719	18.719	18.719	F	18.719	18.719	18.719

SPAN 26 INCR. FINISHED GRADE ELEVATIONS AT POINTS

	DIST.	0	1	2	3	4	5	6	7	F	8	9	10
GDR 1	9.392	18.790	18.790	18.790	18.790	18.790	18.790	18.790	18.790	F	18.790	18.790	18.790
GDR 2	9.392	18.975	18.975	18.975	18.975	18.975	18.975	18.975	18.975	F	18.975	18.975	18.975
GDR 3	9.392	19.160	19.160	19.160	19.160	19.160	19.160	19.160	19.160	F	19.160	19.160	19.160
GDR 4	9.392	19.345	19.345	19.345	19.345	19.345	19.345	19.345	19.345	F	19.345	19.345	19.345
GDR 5	9.392	19.530	19.530	19.530	19.530	19.530	19.530	19.530	19.530	F	19.530	19.530	19.530
GDR 6	9.392	19.345	19.345	19.345	19.345	19.345	19.345	19.345	19.345	F	19.345	19.345	19.345
GDR 7	9.392	19.160	19.160	19.160	19.160	19.160	19.160	19.160	19.160	F	19.160	19.160	19.160
GDR 8	9.392	18.975	18.975	18.975	18.975	18.975	18.975	18.975	18.975	F	18.975	18.975	18.975
GDR 9	9.392	18.790	18.790	18.790	18.790	18.790	18.790	18.790	18.790	F	18.790	18.790	18.790

SPAN 26 INCR. FINISHED GRADE ELEVATIONS AT POINTS

	DIST.	0	1	2	3	4	5	6	7	F	8	9	10
LF	9.392	18.719	18.719	18.719	18.719	18.719	18.719	18.719	18.719	F	18.719	18.719	18.719
LG	9.392	18.750	18.750	18.750	18.750	18.750	18.750	18.750	18.750	F	18.750	18.750	18.750
LWG	9.392	19.510	19.510	19.510	19.510	19.510	19.510	19.510	19.510	F	19.510	19.510	19.510
PG	9.392	19.530	19.530	19.530	19.530	19.530	19.530	19.530	19.530	F	19.530	19.530	19.530
RWG	9.392	19.510	19.510	19.510	19.510	19.510	19.510	19.510	19.510	F	19.510	19.510	19.510
RG	9.392	18.750	18.750	18.750	18.750	18.750	18.750	18.750	18.750	F	18.750	18.750	18.750
RF	9.392	18.719	18.719	18.719	18.719	18.719	18.719	18.719	18.719	F	18.719	18.719	18.719

SPAN 27 INCR. FINISHED GRADE ELEVATIONS AT POINTS

	DIST.	0	1	2	3	4	5	6	7	F	8	9	10
GDR 1	9.392	18.790	18.790	18.790	18.790	18.790	18.790	18.790	18.790	F	18.790	18.790	18.790
GDR 2	9.392	18.975	18.975	18.975	18.975	18.975	18.975	18.975	18.975	F	18.975	18.975	18.975
GDR 3	9.392	19.160	19.160	19.160	19.160	19.160	19.160	19.160	19.160	F	19.160	19.160	19.160
GDR 4	9.392	19.345	19.345	19.345	19.345	19.345	19.345	19.345	19.345	F	19.345	19.345	19.345
GDR 5	9.392	19.530	19.530	19.530	19.530	19.530	19.530	19.530	19.530	F	19.530	19.530	19.530
GDR 6	9.392	19.345	19.345	19.345	19.345	19.345	19.345	19.345	19.345	F	19.345	19.345	19.345
GDR 7	9.392	19.160	19.160	19.160	19.160	19.160	19.160	19.160	19.160	F	19.160	19.160	19.160
GDR 8	9.392	18.975	18.975	18.975	18.975	18.975	18.975	18.975	18.975	F	18.975	18.975	18.975
GDR 9	9.392	18.790	18.790	18.790	18.790	18.790	18.790	18.790	18.790	F	18.790	18.790	18.790

SPAN 27 INCR. FINISHED GRADE ELEVATIONS AT POINTS

	DIST.	0	1	2	3	4	5	6	7	F	8	9	10
LF	9.392	18.719	18.719	18.719	18.719	18.719	18.719	18.719	18.719	F	18.719	18.719	18.719
LG	9.392	18.750	18.750	18.750	18.750	18.750	18.750	18.750	18.750	F	18.750	18.750	18.750
LWG	9.392	19.510	19.510	19.510	19.510	19.510	19.510	19.510	19.510	F	19.510	19.510	19.510
PG	9.392	19.530	19.530	19.530	19.530	19.530	19.530	19.530	19.530	F	19.530	19.530	19.530
RWG	9.392	19.510	19.510	19.510	19.510	19.510	19.510	19.510	19.510	F	19.510	19.510	19.510
RG	9.392	18.750	18.750	18.750	18.750	18.750	18.750	18.750	18.750	F	18.750	18.750	18.750
RF	9.392	18.719	18.719	18.719	18.719	18.719	18.719	18.719	18.719	F	18.719	18.719	18.719

SPAN 28 INCR. FINISH GRADE ELEVATIONS AT POINTS

	DIST.	0	1	2	3	4	5	6	7	8	9	10
GDR 1	9.392	18.790	18.790	18.790	18.790	18.793	18.801	18.813	18.830	18.851	18.877	18.907
GDR 2	9.392	18.975	18.975	18.975	18.975	18.978	18.986	18.998	19.015	19.036	19.062	19.092
GDR 3	9.392	19.160	19.160	19.160	19.160	19.163	19.171	19.183	19.200	19.221	19.247	19.277
GDR 4	9.392	19.345	19.345	19.345	19.345	19.348	19.356	19.368	19.385	19.406	19.432	19.462
GDR 5	9.392	19.530	19.530	19.530	19.530	19.533	19.541	19.553	19.570	19.591	19.617	19.647
GDR 6	9.392	19.345	19.345	19.345	19.345	19.348	19.356	19.368	19.385	19.406	19.432	19.462
GDR 7	9.392	19.160	19.160	19.160	19.160	19.163	19.171	19.183	19.200	19.221	19.247	19.277
GDR 8	9.392	18.975	18.975	18.975	18.975	18.978	18.986	18.998	19.015	19.036	19.062	19.092
GDR 9	9.392	18.790	18.790	18.790	18.790	18.793	18.801	18.813	18.830	18.851	18.877	18.907

SPAN 28 INCR. FINISH GRADE ELEVATIONS AT POINTS

	DIST.	0	1	2	3	4	5	6	7	8	9	10
LF	9.392	18.719	18.719	18.719	18.719	18.722	18.730	18.742	18.759	18.780	18.806	18.836
LG	9.392	18.750	18.750	18.750	18.750	18.753	18.761	18.773	18.790	18.811	18.837	18.867
LWG	9.392	19.510	19.510	19.510	19.510	19.513	19.521	19.533	19.550	19.571	19.597	19.627
PG	9.392	19.530	19.530	19.530	19.530	19.533	19.541	19.553	19.570	19.591	19.617	19.647
RWG	9.392	19.510	19.510	19.510	19.510	19.513	19.521	19.533	19.550	19.571	19.597	19.627
RG	9.392	18.750	18.750	18.750	18.750	18.753	18.761	18.773	18.790	18.811	16.837	18.867
RF	9.392	18.719	18.719	18.719	18.719	18.722	18.730	18.742	18.759	18.780	18.806	18.836

SPAN 29 INCR. FINISH GRADE ELEVATIONS AT POINTS

	DIST.	0	1	2	3	4	5	6	7	8	9	10
GDR 1	9.392	18.901	18.941	18.980	19.024	19.072	19.124	19.181	19.243	19.309	19.379	19.454
GDR 2	9.392	19.092	19.126	19.165	19.209	19.257	19.309	19.366	19.428	19.494	19.564	19.639
GDR 3	9.392	19.277	19.311	19.350	19.394	19.442	19.494	19.551	19.613	19.679	19.749	19.824
GDR 4	9.392	19.462	19.496	19.535	19.579	19.627	19.679	19.736	19.798	19.864	19.934	20.009
GDR 5	9.392	19.647	19.681	19.720	19.764	19.812	19.864	19.921	19.983	20.049	20.119	20.194
GDR 6	9.392	19.462	19.496	19.535	19.579	19.627	19.679	19.736	19.798	19.864	19.934	20.009
GDR 7	9.392	19.277	19.311	19.350	19.394	19.442	19.494	19.551	19.613	19.679	19.749	19.824
GDR 8	9.392	19.092	19.126	19.165	19.209	19.257	19.309	19.366	19.428	19.494	19.564	19.639
GDR 9	9.392	18.901	18.941	18.980	19.024	19.072	19.124	19.181	19.243	19.309	19.379	19.454

SPAN 29 INCR. FINISH GRADE ELEVATIONS AT POINTS

	DIST.	0	1	2	3	4	5	6	7	8	9	10
LF	9.392	18.836	18.870	18.909	18.953	19.001	19.054	19.111	19.172	19.238	19.309	19.383
LG	9.392	18.867	18.901	18.940	18.984	19.032	19.084	19.141	19.203	19.269	19.339	19.414
LWG	9.392	19.627	19.661	19.700	19.744	19.792	19.844	19.901	19.963	20.029	20.099	20.174
PG	9.392	19.647	19.681	19.720	19.764	19.812	19.864	19.921	19.983	20.049	20.119	20.194
RWG	9.392	19.627	19.661	19.700	19.744	19.792	19.844	19.901	19.963	20.029	20.099	20.174
RG	9.392	18.867	18.901	18.940	18.984	19.032	19.084	19.141	19.203	19.269	19.339	19.414
RF	9.392	18.836	18.870	18.909	18.953	19.001	19.054	19.111	19.172	19.238	19.309	19.383

SPAN 30 INCR. FINISH GRADE ELEVATIONS AT POINTS

	DIST.	0	1	2	3	4	5	6	7	8	9	10
GDR 1	9.392	19.454	19.534	19.618	19.706	19.799	19.896	19.998	20.104	20.215	20.331	20.450
GDR 2	9.392	19.639	19.719	19.803	19.891	19.984	20.081	20.183	20.289	20.400	20.516	20.635
GDR 3	9.392	19.824	19.904	19.988	20.076	20.169	20.266	20.368	20.474	20.585	20.701	20.820
GDR 4	9.392	20.009	20.089	20.173	20.261	20.354	20.451	20.553	20.659	20.770	20.886	21.005
GDR 5	9.392	20.194	20.274	20.358	20.446	20.539	20.636	20.738	20.844	20.955	21.071	21.190
GDR 6	9.392	20.009	20.089	20.173	20.261	20.354	20.451	20.553	20.659	20.770	20.886	21.005
GDR 7	9.392	19.824	19.904	19.988	20.076	20.169	20.266	20.368	20.474	20.585	20.701	20.820
GDR 8	9.392	19.639	19.719	19.803	19.891	19.984	20.081	20.183	20.289	20.400	20.516	20.635
GDR 9	9.392	19.454	19.534	19.618	19.706	19.799	19.896	19.998	20.104	20.215	20.331	20.450

SPAN 30 INCR. FINISH GRADE ELEVATIONS AT POINTS

	DIST.	0	1	2	3	4	5	6	7	8	9	10
LF	9.392	19.383	19.463	19.547	19.635	19.728	19.825	19.927	20.034	20.144	20.260	20.379
LG	9.392	19.414	19.494	19.578	19.666	19.759	19.856	19.958	20.064	20.175	20.291	20.410
LWG	9.392	20.174	20.254	20.338	20.426	20.519	20.616	20.718	20.824	20.935	21.051	21.170
PG	9.392	20.194	20.274	20.358	20.446	20.539	20.636	20.738	20.844	20.955	21.071	21.190
RWG	9.392	20.174	20.254	20.338	20.426	20.519	20.616	20.718	20.824	20.935	21.051	21.170
RG	9.392	19.414	19.494	19.578	19.666	19.759	19.856	19.958	20.064	20.175	20.291	20.410
RF	9.392	19.383	19.463	19.547	19.635	19.728	19.825	19.927	20.034	20.144	20.260	20.379

SPAN 31 INCR. FINISH GRADE ELEVATIONS AT POINTS

	DIST.	0	1	2	3	4	5	6	7	8	9	10
GDR 1	9.392	20.450	20.575	20.703	20.836	20.974	21.116	21.263	21.414	21.570	21.730	21.895
GDR 2	9.392	20.635	20.760	20.888	21.021	21.159	21.301	21.448	21.599	21.755	21.915	22.080
GDR 3	9.392	20.820	20.945	21.073	21.206	21.344	21.486	21.633	21.784	21.940	22.100	22.265
GDR 4	9.392	21.005	21.130	21.258	21.391	21.529	21.671	21.818	21.969	22.125	22.285	22.450
GDR 5	9.392	21.190	21.315	21.443	21.576	21.714	21.856	22.003	22.154	22.310	22.470	22.635
GDR 6	9.392	21.005	21.130	21.258	21.391	21.529	21.671	21.818	21.969	22.125	22.285	22.450
GDR 7	9.392	20.820	20.945	21.073	21.206	21.344	21.486	21.633	21.784	21.940	22.100	22.265
GDR 8	9.392	20.635	20.760	20.888	21.021	21.159	21.301	21.448	21.599	21.755	21.915	22.080
GDR 9	9.392	20.450	20.575	20.703	20.836	20.974	21.116	21.263	21.414	21.570	21.730	21.895

SPAN 31 INCR. FINISH GRADE ELEVATIONS AT POINTS

	DIST.	0	1	2	3	4	5	6	7	8	9	10
LF	9.392	20.379	20.504	20.632	20.766	20.903	21.046	21.192	21.343	21.499	21.659	21.824
LG	9.392	20.410	20.535	20.663	20.796	20.934	21.076	21.223	21.374	21.530	21.690	21.855
LWG	9.392	21.170	21.295	21.423	21.556	21.694	21.836	21.983	22.134	22.290	22.450	22.615
PG	9.392	21.190	21.315	21.443	21.576	21.714	21.856	22.003	22.154	22.310	22.470	22.635
RWG	9.392	21.170	21.295	21.423	21.556	21.694	21.836	21.983	22.134	22.290	22.450	22.615
RG	9.392	20.410	20.535	20.663	20.796	20.934	21.076	21.223	21.374	21.530	21.690	21.855
RF	9.392	20.379	20.504	20.632	20.766	20.903	21.046	21.192	21.343	21.499	21.659	21.824

SPAN 32 INCR. FINISH GRADE ELEVATIONS AT POINTS

	DIST.	0	1	2	3	4	5	6	7	8	9	10	11	12	13	14	15	16
GDR 1	9.047	21.923	22.086	22.253	22.424	22.599	22.779	22.962	23.150	23.342	23.538	23.738	23.943	24.151	24.364	24.581	24.802	25.027
GDR 2	9.047	22.126	22.289	22.456	22.627	22.803	22.982	23.166	23.353	23.545	23.741	23.942	24.146	24.355	24.567	24.784	25.005	25.231
GDR 3	9.047	22.330	22.492	22.659	22.831	23.006	23.185	23.369	23.557	23.749	23.945	24.145	24.349	24.558	24.771	24.988	25.209	25.434
GDR 4	9.047	22.533	22.696	22.863	23.034	23.209	23.389	23.572	23.760	23.952	24.148	24.348	24.553	24.761	24.974	25.191	25.412	25.637
GDR 5	9.047	22.533	22.696	22.863	23.034	23.209	23.389	23.572	23.760	23.952	24.148	24.348	24.553	24.761	24.974	25.191	25.412	25.637
GDR 6	9.047	22.330	22.492	22.659	22.831	23.006	23.185	23.369	23.557	23.749	23.945	24.145	24.349	24.558	24.771	24.988	25.209	25.434
GDR 7	9.047	22.126	22.289	22.456	22.627	22.803	22.982	23.166	23.353	23.545	23.741	23.942	24.146	24.355	24.567	24.784	25.005	25.231
GDR 8	9.047	21.923	22.086	22.253	22.424	22.599	22.779	22.962	23.150	23.342	23.538	23.738	23.943	24.151	24.364	24.581	24.802	25.027

SPAN 32 INCR. FINISH GRADE ELEVATIONS AT POINTS

	DIST.	0	1	2	3	4	5	6	7	8	9	10	11	12	13	14	15	16
LF	9.047	21.824	21.987	22.154	22.325	22.500	22.679	22.863	23.051	23.243	23.439	23.639	23.844	24.052	24.265	24.482	24.703	24.928
LG	9.047	21.855	22.017	22.184	22.356	22.531	22.710	22.894	23.082	23.274	23.470	23.670	23.874	24.083	24.296	24.513	24.734	24.959
LWG	9.047	22.615	22.777	22.944	23.116	23.291	23.470	23.654	23.842	24.034	24.230	24.430	24.634	24.843	25.056	25.273	25.494	25.719
PG	9.047	22.635	22.797	22.964	23.136	23.311	23.490	23.674	23.862	24.054	24.250	24.450	24.654	24.863	25.076	25.293	25.514	25.739
RWG	9.047	22.615	22.777	22.944	23.116	23.291	23.470	23.654	23.842	24.034	24.230	24.430	24.634	24.843	25.056	25.273	25.494	25.719
RG	9.047	21.855	22.017	22.184	22.356	22.531	22.710	22.894	23.082	23.274	23.470	23.670	23.874	24.083	24.296	24.513	24.734	24.959
RF	9.047	21.824	21.987	22.154	22.325	22.500	22.679	22.863	23.051	23.243	23.439	23.639	23.844	24.052	24.265	24.482	24.703	24.928

6/MAY/96

FINLEY McNARY/JANSSEN SPAANS
a Joint Venture

Finley McNary Engineers, Inc
1391 Timberlane Road Suite 200
Tallahassee, Florida 32312-1721

Janssen & Spaans Engineers, Inc.
2825 East 56th Street
Indianapolis, Indiana 46220

REVISIONS

DATE	BY	DESCRIPTION	DATE	BY	DESCRIPTION	DATE	BY	DESCRIPTION	DATE	BY

	NAME	DATE
DR. BY	J.L.S.	1/96
CHK. BY	C.W.N.	1/96
SUPV.	N.D.R.	1/96

FINLEY McNARY/JANSSEN SPAANS

BOARD OF COUNTY COMMISSIONERS
LEE, COUNTY, FLORIDA
DEPARTMENT OF TRANSPORTATION

MIDPOINT BRIDGE
FINISH GRADE ELEVATIONS (9)

PROJECT NO	SHEET NO
5896	C-60A

BX1-70

SPAN 33 — FINISH GRADE ELEVATIONS AT POINTS

SPAN 33	INCR. DIST.	0	1	2	3	4	5	6	7	8	9	10	11	12	13	14	15	16
GDR 1	9.047	25.021	25.257	25.490	25.728	25.970	26.216	26.466	26.720	26.979	27.241	27.508	27.779	28.054	28.330	28.606	28.882	29.158
GDR 2	9.047	25.231	25.460	25.693	25.931	26.173	26.419	26.669	26.924	27.182	27.445	27.712	27.983	28.257	28.533	28.809	29.085	29.361
GDR 3	9.047	25.434	25.663	25.897	26.134	26.376	26.622	26.873	27.127	27.385	27.648	27.915	28.186	28.461	28.737	29.013	29.289	29.565
GDR 4	9.047	25.637	25.867	26.100	26.338	26.580	26.826	27.076	27.330	27.589	27.851	28.118	28.389	28.664	28.940	29.216	29.492	29.768
GDR 5	9.047	25.637	25.867	26.100	26.338	26.580	26.826	27.076	27.330	27.589	27.851	28.118	28.389	28.664	28.940	29.216	29.492	29.768
GDR 6	9.047	25.434	25.663	25.897	26.134	26.376	26.622	26.873	27.127	27.385	27.648	27.915	28.186	28.461	28.737	29.013	29.289	29.565
GDR 7	9.047	25.231	25.460	25.693	25.931	26.173	26.419	26.669	26.924	27.182	27.445	27.712	27.983	28.257	28.533	28.809	29.085	29.361
GDR 8	9.047	25.021	25.257	25.490	25.728	25.970	26.216	26.466	26.720	26.979	27.241	27.508	27.779	28.054	28.330	28.606	28.882	29.158

SPAN 33	INCR. DIST.	0	1	2	3	4	5	6	7	8	9	10	11	12	13	14	15	16
LF	9.047	24.928	25.157	25.391	25.629	25.871	26.117	26.367	26.621	26.880	27.142	27.409	27.680	27.955	28.231	28.507	28.783	29.059
LG	9.047	24.959	25.188	25.422	25.659	25.901	26.147	26.398	26.652	26.910	27.173	27.440	27.711	27.986	28.262	28.538	28.814	29.090
LMG	9.047	25.719	25.948	26.182	26.419	26.661	26.907	27.158	27.412	27.670	27.933	28.200	28.471	28.746	29.022	29.298	29.574	29.850
PG	9.047	25.739	25.968	26.202	26.439	26.681	26.927	27.178	27.432	27.690	27.953	28.220	28.491	28.766	29.042	29.318	29.594	29.870
RMG	9.047	25.719	25.948	26.182	26.419	26.661	26.907	27.158	27.412	27.670	27.933	28.200	28.471	28.746	29.022	29.298	29.574	29.850
RG	9.047	24.959	25.188	25.422	25.659	25.901	26.147	26.398	26.652	26.910	27.173	27.440	27.711	27.986	28.262	28.538	28.814	29.090
RF	9.047	24.928	25.157	25.391	25.629	25.871	26.117	26.367	26.621	26.880	27.142	27.409	27.680	27.955	28.231	28.507	28.783	29.059

SPAN 34 — FINISH GRADE ELEVATIONS AT POINTS

SPAN 34	INCR. DIST.	0	1	2	3	4	5	6	7	8	9	10	11	12	13	14	15	16
GDR 1	9.047	29.158	29.434	29.710	29.986	30.262	30.537	30.813	31.089	31.365	31.641	31.917	32.193	32.469	32.745	33.021	33.297	33.573
GDR 2	9.047	29.361	29.637	29.913	30.189	30.465	30.741	31.017	31.293	31.569	31.845	32.120	32.396	32.672	32.948	33.224	33.500	33.776
GDR 3	9.047	29.565	29.840	30.116	30.392	30.668	30.944	31.220	31.496	31.772	32.048	32.324	32.600	32.876	33.152	33.428	33.703	33.979
GDR 4	9.047	29.768	30.044	30.320	30.596	30.872	31.147	31.423	31.699	31.975	32.251	32.527	32.803	33.079	33.355	33.631	33.907	34.183
GDR 5	9.047	29.768	30.044	30.320	30.596	30.872	31.147	31.423	31.699	31.975	32.251	32.527	32.803	33.079	33.355	33.631	33.907	34.183
GDR 6	9.047	29.565	29.840	30.116	30.392	30.668	30.944	31.220	31.496	31.772	32.048	32.324	32.600	32.876	33.152	33.428	33.703	33.979
GDR 7	9.047	29.361	29.637	29.913	30.189	30.465	30.741	31.017	31.293	31.569	31.845	32.120	32.396	32.672	32.948	33.224	33.500	33.776
GDR 8	9.047	29.158	29.434	29.710	29.986	30.262	30.537	30.813	31.089	31.365	31.641	31.917	32.193	32.469	32.745	33.021	33.297	33.573

SPAN 34	INCR. DIST.	0	1	2	3	4	5	6	7	8	9	10	11	12	13	14	15	16
LF	9.047	29.059	29.335	29.611	29.886	30.162	30.438	30.714	30.990	31.266	31.542	31.818	32.094	32.370	32.646	32.922	33.198	33.474
LG	9.047	29.090	29.365	29.641	29.917	30.193	30.469	30.745	31.021	31.297	31.573	31.849	32.125	32.401	32.677	32.953	33.228	33.504
LMG	9.047	29.850	30.125	30.401	30.677	30.953	31.229	31.505	31.781	32.057	32.333	32.609	32.885	33.161	33.437	33.713	33.988	34.264
PG	9.047	29.870	30.145	30.421	30.697	30.973	31.249	31.525	31.801	32.077	32.353	32.629	32.905	33.181	33.457	33.733	34.008	34.284
RMG	9.047	29.850	30.125	30.401	30.677	30.953	31.229	31.505	31.781	32.057	32.333	32.609	32.885	33.161	33.437	33.713	33.988	34.264
RG	9.047	29.090	29.365	29.641	29.917	30.193	30.469	30.745	31.021	31.297	31.573	31.849	32.125	32.401	32.677	32.953	33.228	33.504
RF	9.047	29.059	29.335	29.611	29.886	30.162	30.438	30.714	30.990	31.266	31.542	31.818	32.094	32.370	32.646	32.922	33.198	33.474

SPAN 35 — FINISH GRADE ELEVATIONS AT POINTS

SPAN 35	INCR. DIST.	0	1	2	3	4	5	6	7	8	9	10	11	12	13	14	15	16
GDR 1	9.047	33.573	33.849	34.125	34.400	34.676	34.952	35.228	35.504	35.780	36.056	36.332	36.608	36.884	37.160	37.436	37.712	37.988
GDR 2	9.047	33.776	34.052	34.328	34.604	34.880	35.156	35.432	35.708	35.983	36.259	36.535	36.811	37.087	37.363	37.639	37.915	38.191
GDR 3	9.047	33.979	34.255	34.531	34.807	35.083	35.359	35.635	35.911	36.187	36.463	36.739	37.015	37.291	37.566	37.842	38.118	38.394
GDR 4	9.047	34.183	34.459	34.735	35.010	35.286	35.562	35.838	36.114	36.390	36.666	36.947	37.218	37.494	37.770	38.046	38.322	38.598
GDR 5	9.047	34.183	34.459	34.735	35.010	35.286	35.562	35.838	36.114	36.390	36.666	36.942	37.218	37.494	37.770	38.046	38.322	38.598
GDR 6	9.047	33.979	34.255	34.531	34.807	35.083	35.359	35.635	35.911	36.187	36.463	36.739	37.015	37.291	37.566	37.842	38.118	38.394
GDR 7	9.047	33.776	34.052	34.328	34.604	34.880	35.156	35.432	35.708	35.983	36.259	36.535	36.811	37.087	37.363	37.639	37.915	38.191
GDR 8	9.047	33.573	33.849	34.125	34.400	34.676	34.952	35.228	35.504	35.780	36.056	36.332	36.608	36.884	37.160	37.436	37.712	37.988

SPAN 35	INCR. DIST.	0	1	2	3	4	5	6	7	8	9	10	11	12	13	14	15	16
LF	9.047	33.474	33.749	34.025	34.301	34.577	34.853	35.129	35.405	35.681	35.957	36.233	36.509	36.785	37.061	37.337	37.612	37.888
LG	9.047	33.504	33.780	34.056	34.332	34.608	34.884	35.160	35.436	35.712	35.988	36.264	36.540	36.816	37.091	37.367	37.643	37.919
LMG	9.047	34.264	34.540	34.816	35.092	35.368	35.644	35.920	36.196	36.472	36.748	37.024	37.300	37.576	37.851	38.127	38.403	38.679
PG	9.047	34.284	34.560	34.836	35.112	35.388	35.664	35.940	36.216	36.492	36.768	37.044	37.320	37.596	37.871	38.147	38.423	38.699
RMG	9.047	34.264	34.540	34.816	35.092	35.368	35.644	35.920	36.196	36.472	36.748	37.024	37.300	37.576	37.851	38.127	38.403	38.679
RG	9.047	33.504	33.780	34.056	34.332	34.608	34.884	35.160	35.436	35.712	35.988	36.264	36.540	36.816	37.091	37.367	37.643	37.919
RF	9.047	33.474	33.749	34.025	34.301	34.577	34.853	35.129	35.405	35.681	35.957	36.233	36.509	36.785	37.061	37.337	37.612	37.888

SPAN 36 — FINISH GRADE ELEVATIONS AT POINTS

SPAN 36	INCR. DIST.	0	1	2	3	4	5	6	7	8	9	10	11	12	13	14	15	16
GDR 1	9.047	37.988	38.264	38.539	38.815	39.091	39.367	39.643	39.919	40.195	40.471	40.747	41.023	41.299	41.575	41.851	42.127	42.402
GDR 2	9.047	38.191	38.467	38.743	39.019	39.295	39.571	39.846	40.122	40.398	40.674	40.950	41.226	41.502	41.778	42.054	42.330	42.606
GDR 3	9.047	38.394	38.670	38.946	39.222	39.498	39.774	40.050	40.326	40.602	40.878	41.154	41.429	41.705	41.981	42.257	42.533	42.809
GDR 4	9.047	38.598	38.874	39.149	39.425	39.701	39.977	40.253	40.529	40.805	41.081	41.357	41.633	41.909	42.185	42.461	42.737	43.012
GDR 5	9.047	38.598	38.874	39.149	39.425	39.701	39.977	40.253	40.529	40.805	41.081	41.357	41.633	41.909	42.185	42.461	42.737	43.012
GDR 6	9.047	38.394	38.670	38.946	39.222	39.498	39.774	40.050	40.326	40.602	40.878	41.154	41.429	41.705	41.981	42.257	42.533	42.809
GDR 7	9.047	38.191	38.467	38.743	39.019	39.295	39.571	39.846	40.122	40.398	40.674	40.950	41.226	41.502	41.778	42.054	42.330	42.606
GDR 8	9.047	37.988	38.264	38.539	38.815	39.091	39.367	39.643	39.919	40.195	40.471	40.747	41.023	41.299	41.575	41.851	42.127	42.402

SPAN 36	INCR. DIST.	0	1	2	3	4	5	6	7	8	9	10	11	12	13	14	15	16
LF	9.047	37.888	38.164	38.440	38.716	38.992	39.268	39.544	39.820	40.096	40.372	40.648	40.924	41.200	41.476	41.751	42.027	42.303
LG	9.047	37.919	38.195	38.471	38.747	39.023	39.299	39.575	39.851	40.127	40.403	40.679	40.954	41.230	41.506	41.782	42.058	42.334
LMG	9.047	38.679	38.955	39.231	39.507	39.783	40.059	40.335	40.611	40.887	41.163	41.439	41.714	41.990	42.266	42.542	42.818	43.094
PG	9.047	38.699	38.975	39.251	39.527	39.803	40.079	40.355	40.631	40.907	41.183	41.459	41.734	42.010	42.286	42.562	42.838	43.114
RMG	9.047	38.679	38.955	39.231	39.507	39.783	40.059	40.335	40.611	40.887	41.163	41.439	41.714	41.990	42.266	42.542	42.818	43.094
RG	9.047	37.919	38.195	38.471	38.747	39.023	39.299	39.575	39.851	40.127	40.403	40.679	40.954	41.230	41.506	41.782	42.058	42.334
RF	9.047	37.888	38.164	38.440	38.716	38.992	39.268	39.544	39.820	40.096	40.372	40.648	40.924	41.200	41.476	41.751	42.027	42.303

SPAN 37 — FINISH GRADE ELEVATIONS AT POINTS

SPAN 37	INCR. DIST.	0	1	2	3	4	5	6	7	8	9	10	11	12	13	14	15	16
GDR 1	9.047	42.402	42.678	42.954	43.230	43.506	43.782	44.058	44.334	44.610	44.886	45.162	45.438	45.714	45.990	46.265	46.541	46.817
GDR 2	9.047	42.606	42.882	43.158	43.434	43.710	43.985	44.261	44.537	44.813	45.089	45.365	45.641	45.917	46.193	46.469	46.745	47.021
GDR 3	9.047	42.809	43.085	43.361	43.637	43.913	44.189	44.465	44.741	45.017	45.292	45.568	45.844	46.120	46.396	46.672	46.948	47.224
GDR 4	9.047	43.012	43.288	43.564	43.840	44.116	44.392	44.668	44.944	45.220	45.496	45.772	46.048	46.324	46.600	46.875	47.151	47.427
GDR 5	9.047	43.012	43.288	43.564	43.840	44.116	44.392	44.668	44.944	45.220	45.496	45.772	46.048	46.324	46.600	46.875	47.151	47.427
GDR 6	9.047	42.809	43.085	43.361	43.637	43.913	44.189	44.465	44.741	45.017	45.292	45.568	45.844	46.120	46.396	46.672	46.948	47.224
GDR 7	9.047	42.606	42.882	43.158	43.434	43.710	43.985	44.261	44.537	44.813	45.089	45.365	45.641	45.917	46.193	46.469	46.745	47.021
GDR 8	9.047	42.402	42.678	42.954	43.230	43.506	43.782	44.058	44.334	44.610	44.886	45.162	45.438	45.714	45.990	46.265	46.541	46.817

SPAN 37	INCR. DIST.	0	1	2	3	4	5	6	7	8	9	10	11	12	13	14	15	16
LF	9.047	42.303	42.579	42.855	43.131	43.407	43.683	43.959	44.235	44.511	44.787	45.063	45.339	45.614	45.890	46.166	46.442	46.718
LG	9.047	42.334	42.610	42.886	43.162	43.438	43.714	43.990	44.266	44.542	44.817	45.093	45.369	45.645	45.921	46.197	46.473	46.749
LMG	9.047	43.094	43.370	43.646	43.922	44.198	44.474	44.750	45.026	45.302	45.577	45.853	46.129	46.405	46.681	46.957	47.233	47.509
PG	9.047	43.114	43.390	43.666	43.942	44.218	44.494	44.770	45.046	45.322	45.597	45.873	46.149	46.425	46.701	46.977	47.253	47.529
RMG	9.047	43.094	43.370	43.646	43.922	44.198	44.474	44.750	45.026	45.302	45.577	45.853	46.129	46.405	46.681	46.957	47.233	47.509
RG	9.047	42.334	42.610	42.886	43.162	43.438	43.714	43.990	44.266	44.542	44.817	45.093	45.369	45.645	45.921	46.197	46.473	46.749
RF	9.047	42.303	42.579	42.855	43.131	43.407	43.683	43.959	44.235	44.511	44.787	45.063	45.339	45.614	45.890	46.166	46.442	46.718

SPAN 38 — FINISH GRADE ELEVATIONS AT POINTS

SPAN 38	INCR. DIST.	0	1	2	3	4	5	6	7	8	9	10	11	12	13	14	15	16
GDR 1	9.047	46.817	47.093	47.369	47.645	47.921	48.197	48.473	48.749	49.025	49.301	49.577	49.853	50.128	50.404	50.680	50.956	51.232
GDR 2	9.047	47.021	47.297	47.573	47.848	48.124	48.400	48.676	48.952	49.228	49.504	49.780	50.056	50.332	50.608	50.884	51.160	51.436
GDR 3	9.047	47.224	47.500	47.776	48.052	48.328	48.604	48.880	49.156	49.431	49.707	49.983	50.259	50.535	50.811	51.087	51.363	51.639
GDR 4	9.047	47.427	47.703	47.979	48.255	48.531	48.807	49.083	49.359	49.635	49.911	50.187	50.463	50.738	51.014	51.290	51.566	51.842
GDR 5	9.047	47.427	47.703	47.979	48.255	48.531	48.807	49.083	49.359	49.635	49.911	50.187	50.463	50.738	51.014	51.290	51.566	51.842
GDR 6	9.047	47.224	47.500	47.776	48.052	48.328	48.604	48.880	49.156	49.431	49.707	49.983	50.259	50.535	50.811	51.087	51.363	51.639
GDR 7	9.047	47.021	47.297	47.573	47.848	48.124	48.400	48.676	48.952	49.228	49.504	49.780	50.056	50.332	50.608	50.884	51.160	51.436
GDR 8	9.047	46.817	47.093	47.369	47.645	47.921	48.197	48.473	48.749	49.025	49.301	49.577	49.853	50.128	50.404	50.680	50.956	51.232

SPAN 38	INCR. DIST.	0	1	2	3	4	5	6	7	8	9	10	11	12	13	14	15	16
LF	9.047	46.718	46.994	47.270	47.546	47.822	48.098	48.374	48.650	48.926	49.202	49.477	49.753	50.029	50.305	50.581	50.857	51.133
LG	9.047	46.749	47.025	47.301	47.577	47.853	48.129	48.405	48.681	48.956	49.232	49.508	49.784	50.060	50.336	50.612	50.888	51.164
LMG	9.047	47.509	47.785	48.061	48.337	48.613	48.889	49.165	49.441	49.716	49.992	50.268	50.544	50.820	51.096	51.372	51.648	51.924
PG	9.047	47.529	47.805	48.081	48.357	48.633	48.909	49.185	49.461	49.736	50.012	50.288	50.564	50.840	51.116	51.392	51.668	51.944
RMG	9.047	47.509	47.785	48.061	48.337	48.613	48.889	49.165	49.441	49.716	49.992	50.268	50.544	50.820	51.096	51.372	51.648	51.924
RG	9.047	46.749	47.025	47.301	47.577	47.853	48.129	48.405	48.681	48.956	49.232	49.508	49.784	50.060	50.336	50.612	50.888	51.164
RI	9.047	46.718	46.994	47.270	47.546	47.822	48.098	48.374	48.650	48.926	49.202	49.477	49.753	50.029	50.305	50.581	50.857	51.133

SPAN 39 — FINISH GRADE ELEVATIONS AT POINTS

SPAN 39	INCR. DIST.	0	1	2	3	4	5	6	7	8	9	10	11	12	13	14	15	16
GDR 1	9.047	51.232	51.508	51.784	52.060	52.336	52.612	52.888	53.164	53.440	53.716	53.992	54.267	54.543	54.819	55.095	55.371	55.647
GDR 2	9.047	51.436	51.711	51.987	52.263	52.539	52.815	53.091	53.367	53.643	53.919	54.195	54.471	54.747	55.023	55.299	55.574	55.850
GDR 3	9.047	51.639	51.915	52.191	52.467	52.743	53.019	53.294	53.570	53.846	54.122	54.398	54.674	54.950	55.226	55.502	55.778	56.054
GDR 4	9.047	51.842	52.118	52.394	52.670	52.946	53.222	53.498	53.774	54.050	54.326	54.602	54.877	55.153	55.429	55.705	55.981	56.257
GDR 5	9.047	51.842	52.118	52.394	52.670	52.946	53.222	53.498	53.774	54.050	54.326	54.602	54.877	55.153	55.429	55.705	55.981	56.257
GDR 6	9.047	51.639	51.915	52.191	52.467	52.743	53.019	53.294	53.570	53.846	54.122	54.398	54.674	54.950	55.226	55.502	55.778	56.054
GDR 7	9.047	51.436	51.711	51.987	52.263	52.539	52.815	53.091	53.367	53.643	53.919	54.195	54.471	54.747	55.023	55.299	55.574	55.850
GDR 8	9.047	51.232	51.508	51.784	52.060	52.336	52.612	52.888	53.164	53.440	53.716	53.992	54.267	54.543	54.819	55.095	55.371	55.647

SPAN 39	INCR. DIST.	0	1	2	3	4	5	6	7	8	9	10	11	12	13	14	15	16
LF	9.047	51.133	51.409	51.685	51.961	52.237	52.513	52.789	53.065	53.340	53.616	53.892	54.168	54.444	54.720	54.996	55.272	55.548
LG	9.047	51.164	51.440	51.716	51.992	52.268	52.544	52.819	53.095	53.371	53.647	53.923	54.199	54.475	54.751	55.027	55.303	55.579
LMG	9.047	51.924	52.200	52.476	52.752	53.028	53.304	53.579	53.855	54.131	54.407	54.683	54.959	55.235	55.511	55.787	56.063	56.339
PG	9.047	51.944	52.220	52.496	52.772	53.048	53.324	53.599	53.875	54.151	54.427	54.703	54.979	55.255	55.531	55.807	56.083	56.359
RMG	9.047	51.924	52.200	52.476	52.752	53.028	53.304	53.579	53.855	54.131	54.407	54.683	54.959	55.235	55.511	55.787	56.063	56.339
RG	9.047	51.164	51.440	51.716	51.992	52.268	52.544	52.819	53.095	53.371	53.647	53.923	54.199	54.475	54.751	55.027	55.303	55.579
RF	9.047	51.133	51.409	51.685	51.961	52.237	52.513	52.789	53.065	53.340	53.616	53.892	54.168	54.444	54.720	54.996	55.272	55.548

SPAN 40 — FINISH GRADE ELEVATIONS AT POINTS

SPAN 40	INCR. DIST.	0	1	2	3	4	5	6	7	8	9	10	11	12	13	14	15	16
GDR 1	9.047	55.647	55.923	56.199	56.475	56.751	57.027	57.303	57.579	57.855	58.130	58.406	58.682	58.958	59.228	59.492	59.751	60.005
GDR 2	9.047	55.850	56.126	56.402	56.678	56.954	57.230	57.506	57.782	58.058	58.334	58.610	58.886	59.161	59.431	59.696	59.955	60.208
GDR 3	9.047	56.054	56.330	56.606	56.882	57.157	57.433	57.709	57.985	58.261	58.537	58.813	59.089	59.365	59.635	59.899	60.158	60.411
GDR 4	9.047	56.257	56.533	56.809	57.085	57.361	57.637	57.913	58.189	58.465	58.740	59.016	59.292	59.568	59.838	60.102	60.361	60.615
GDR 5	9.047	56.257	56.533	56.809	57.085	57.361	57.637	57.913	58.189	58.465	58.740	59.016	59.292	59.568	59.838	60.102	60.361	60.615
GDR 6	9.047	56.054	56.330	56.606	56.882	57.157	57.433	57.709	57.985	58.261	58.537	58.813	59.089	59.365	59.635	59.899	60.158	60.411
GDR 7	9.047	55.850	56.126	56.402	56.678	56.954	57.230	57.506	57.782	58.058	58.334	58.610	58.886	59.161	59.431	59.696	59.955	60.208
GDR 8	9.047	55.647	55.923	56.199	56.475	56.751	57.027	57.303	57.579	57.855	58.130	58.406	58.682	58.958	59.228	59.492	59.751	60.005

SPAN 40	INCR. DIST.	0	1	2	3	4	5	6	7	8	9	10	11	12	13	14	15	16
LF	9.047	55.548	55.824	56.100	56.376	56.652	56.928	57.203	57.479	57.755	58.031	58.307	58.583	58.859	59.129	59.393	59.652	59.906
LG	9.047	55.579	55.855	56.131	56.407	56.682	56.958	57.234	57.510	57.786	58.062	58.338	58.614	58.890	59.160	59.424	59.683	59.936
LMG	9.047	56.339	56.615	56.891	57.167	57.442	57.718	57.994	58.270	58.546	58.822	59.098	59.374	59.650	59.920	60.184	60.443	60.696
PG	9.047	56.359	56.635	56.911	57.187	57.462	57.738	58.014	58.290	58.566	58.842	59.118	59.394	59.670	59.940	60.204	60.463	60.716
RMG	9.047	56.339	56.615	56.891	57.167	57.442	57.718	57.994	58.270	58.546	58.822	59.098	59.374	59.650	59.920	60.184	60.443	60.696
RG	9.047	55.579	55.855	56.131	56.407	56.682	56.958	57.234	57.510	57.786	58.062	58.338	58.614	58.890	59.160	59.424	59.683	59.936
RF	9.047	55.548	55.824	56.100	56.376	56.652	56.928	57.203	57.479	57.755	58.031	58.307	58.583	58.859	59.129	59.393	59.652	59.906

6 MAY 96

FINLEY McNARY/JANSSEN SPAANS
a Joint Venture

Finley McNary Engineers, Inc
1391 Timberlane Road Suite 200
Tallahassee, Florida 32312-1721

Janssen & Spaans Engineers, Inc.
2825 East 56th Street
Indianapolis, Indiana 46220

REVISIONS

DATE	BY	DESCRIPTION	DATE	BY	DESCRIPTION	DATE	BY	DESCRIPTION	DATE	BY	

	NAME	DATE
DR. BY	J.L.S.	1/96
CHK. BY	C.W.N.	1/96
SUPV.	H.D.R.	1/96

FINLEY McNARY/JANSSEN SPAANS

BOARD OF COUNTY COMMISSIONERS
LEE, COUNTY, FLORIDA
DEPARTMENT OF TRANSPORTATION

MIDPOINT BRIDGE
FINISH GRADE ELEVATIONS (10)

PROJECT NO	SHEET NO
5896	C 61A

BX1-71

SPAN 41 INCR. — FINISH GRADE ELEVATIONS AT POINTS

	DIST.	0	1	2	3	4	5	6	7	8	9	10	11	12	13	14	15	16
GDR 1	9.047	60.205	60.253	60.495	60.732	60.963	61.189	61.409	61.623	61.832	62.036	62.234	62.426	62.613	62.794	62.970	63.140	63.305
GDR 2	9.047	60.208	60.456	60.698	60.935	61.166	61.392	61.612	61.827	62.036	62.239	62.437	62.629	62.816	62.998	63.173	63.343	63.508
GDR 3	9.047	60.411	60.659	60.902	61.138	61.370	61.595	61.815	62.030	62.239	62.442	62.640	62.833	63.020	63.201	63.377	63.547	63.711
GDR 4	9.047	60.615	60.863	61.105	61.342	61.573	61.799	62.019	62.233	62.442	62.646	62.844	63.036	63.223	63.404	63.580	63.750	63.915
GDR 5	9.047	60.615	60.863	61.105	61.342	61.573	61.799	62.019	62.233	62.442	62.646	62.844	63.036	63.223	63.404	63.580	63.750	63.915
GDR 6	9.047	60.411	60.659	60.902	61.138	61.370	61.595	61.815	62.030	62.239	62.442	62.640	62.833	63.020	63.201	63.377	63.547	63.711
GDR 7	9.047	60.208	60.456	60.698	60.935	61.166	61.392	61.612	61.827	62.036	62.239	62.437	62.629	62.816	62.998	63.173	63.343	63.508
GDR 8	9.047	60.005	60.253	60.495	60.732	60.963	61.189	61.409	61.623	61.832	62.036	62.234	62.426	62.613	62.794	62.970	63.140	63.305

SPAN 41 INCR. — FINISH GRADE ELEVATIONS AT POINTS

	DIST.	0	1	2	3	4	5	6	7	8	9	10	11	12	13	14	15	16
LF	9.047	59.906	60.153	60.396	60.633	60.864	61.089	61.310	61.524	61.733	61.937	62.135	62.327	62.514	62.695	62.871	63.041	63.206
LG	9.047	59.936	60.184	60.427	60.663	60.895	61.120	61.340	61.555	61.764	61.967	62.165	62.358	62.545	62.726	62.902	63.072	63.236
LMG	9.047	60.696	60.944	61.187	61.423	61.655	61.880	62.100	62.315	62.524	62.727	62.925	63.118	63.305	63.486	63.662	63.832	63.996
PG	9.047	60.716	60.964	61.207	61.443	61.675	61.900	62.120	62.335	62.544	62.747	62.945	63.138	63.325	63.506	63.682	63.852	64.016
RMG	9.047	60.696	60.944	61.187	61.423	61.655	61.880	62.100	62.315	62.524	62.727	62.925	63.118	63.305	63.486	63.662	63.832	63.996
RG	9.047	59.936	60.184	60.427	60.663	60.895	61.120	61.340	61.555	61.764	61.967	62.165	62.358	62.545	62.726	62.902	63.072	63.236
RF	9.047	59.906	60.153	60.396	60.633	60.864	61.089	61.310	61.524	61.733	61.937	62.135	62.327	62.514	62.695	62.871	63.041	63.206

SPAN 42 INCR. — FINISH GRADE ELEVATIONS AT POINTS

	DIST.	0	1	2	3	4	5	6	7	8	9	10	11	12	13	14	15	16
GDR 1	10	63.305	63.480	63.649	63.811	63.966	64.115	64.256	64.391	64.519	64.640	64.755	64.863	64.964	65.058	65.145	65.226	65.300
GDR 2	10	63.508	63.684	63.852	64.014	64.169	64.318	64.460	64.594	64.722	64.844	64.958	65.066	65.167	65.261	65.349	65.429	65.503
GDR 3	10	63.711	63.887	64.056	64.218	64.373	64.521	64.663	64.798	64.926	65.047	65.162	65.269	65.370	65.464	65.552	65.632	65.706
GDR 4	10	63.915	64.090	64.259	64.421	64.576	64.725	64.866	65.001	65.129	65.250	65.365	65.473	65.574	65.668	65.755	65.836	65.910
GDR 5	10	63.915	64.090	64.259	64.421	64.576	64.725	64.866	65.001	65.129	65.250	65.365	65.473	65.574	65.668	65.755	65.836	65.910
GDR 6	10	63.711	63.887	64.056	64.218	64.373	64.521	64.663	64.798	64.926	65.047	65.162	65.269	65.370	65.464	65.552	65.632	65.706
GDR 7	10	63.508	63.684	63.852	64.014	64.169	64.318	64.460	64.594	64.722	64.844	64.958	65.066	65.167	65.261	65.349	65.429	65.503
GDR 8	10	63.305	63.480	63.649	63.811	63.966	64.115	64.256	64.391	64.519	64.640	64.755	64.863	64.964	65.058	65.145	65.226	65.300

SPAN 42 INCR. — FINISH GRADE ELEVATIONS AT POINTS

	DIST.	0	1	2	3	4	5	6	7	8	9	10	11	12	13	14	15	16
LF	10	63.206	63.381	63.550	63.712	63.867	64.015	64.157	64.292	64.420	64.541	64.656	64.763	64.864	64.959	65.046	65.127	65.200
LG	10	63.236	63.412	63.581	63.743	63.898	64.046	64.188	64.323	64.451	64.572	64.687	64.794	64.895	64.989	65.077	65.157	65.231
LMG	10	63.996	64.172	64.341	64.503	64.658	64.806	64.948	65.083	65.211	65.332	65.447	65.554	65.655	65.749	65.837	65.917	65.991
PG	10	64.016	64.192	64.361	64.523	64.678	64.826	64.968	65.103	65.231	65.352	65.467	65.574	65.675	65.769	65.857	65.937	66.011
RMG	10	63.996	64.172	64.341	64.503	64.658	64.806	64.948	65.083	65.211	65.332	65.447	65.554	65.655	65.749	65.837	65.917	65.991
RG	10	63.236	63.412	63.581	63.743	63.898	64.046	64.188	64.323	64.451	64.572	64.687	64.794	64.895	64.989	65.077	65.157	65.231
RF	10	63.206	63.381	63.550	63.712	63.867	64.015	64.157	64.292	64.420	64.541	64.656	64.763	64.864	64.959	65.046	65.127	65.200

SPAN 43 INCR. — FINISH GRADE ELEVATIONS AT POINTS

	DIST.	0	1	2	3	4	5	6	7	8	9	10	11	12	13	14	15	16	17	18	19	20
GDR 1	10	65.300	65.367	65.427	65.480	65.527	65.567	65.600	65.627	65.646	65.659	65.665	65.664	65.657	65.643	65.622	65.594	65.559	65.518	65.470	65.415	65.353
GDR 2	10	65.503	65.570	65.630	65.684	65.731	65.770	65.804	65.830	65.850	65.862	65.869	65.868	65.860	65.846	65.825	65.797	65.762	65.721	65.673	65.618	65.556
GDR 3	10	65.706	65.773	65.834	65.887	65.934	65.974	66.007	66.033	66.053	66.066	66.072	66.071	66.064	66.049	66.028	66.000	65.966	65.924	65.876	65.821	65.760
GDR 4	10	65.910	65.977	66.037	66.090	66.137	66.177	66.210	66.237	66.256	66.269	66.275	66.274	66.267	66.253	66.232	66.204	66.169	66.128	66.080	66.025	65.963
GDR 5	10	65.910	65.977	66.037	66.090	66.137	66.177	66.210	66.237	66.256	66.269	66.275	66.274	66.267	66.253	66.232	66.204	66.169	66.128	66.080	66.025	65.963
GDR 6	10	65.706	65.773	65.834	65.887	65.934	65.974	66.007	66.033	66.053	66.066	66.072	66.071	66.064	66.049	66.028	66.000	65.966	65.924	65.876	65.821	65.760
GDR 7	10	65.503	65.570	65.630	65.684	65.731	65.770	65.804	65.830	65.850	65.862	65.869	65.868	65.860	65.846	65.825	65.797	65.762	65.721	65.673	65.618	65.556
GDR 8	10	65.300	65.367	65.427	65.480	65.527	65.567	65.600	65.627	65.646	65.659	65.665	65.664	65.657	65.643	65.622	65.594	65.559	65.518	65.470	65.415	65.353

SPAN 43 INCR. — FINISH GRADE ELEVATIONS AT POINTS

	DIST.	0	1	2	3	4	5	6	7	8	9	10	11	12	13	14	15	16	17	18	19	20
LF	10	65.200	65.268	65.328	65.381	65.428	65.468	65.501	65.528	65.547	65.560	65.566	65.565	65.558	65.543	65.522	65.495	65.460	65.419	65.370	65.315	65.254
LG	10	65.231	65.298	65.359	65.412	65.459	65.499	65.532	65.558	65.578	65.591	65.597	65.596	65.589	65.574	65.553	65.525	65.491	65.449	65.401	65.346	65.285
LMG	10	65.991	66.058	66.119	66.172	66.219	66.259	66.292	66.318	66.338	66.351	66.357	66.356	66.349	66.334	66.313	66.285	66.251	66.209	66.161	66.106	66.045
PG	10	66.011	66.078	66.139	66.192	66.239	66.279	66.312	66.338	66.358	66.371	66.377	66.376	66.369	66.354	66.333	66.305	66.271	66.229	66.181	66.126	66.065
RMG	10	65.991	66.058	66.119	66.172	66.219	66.259	66.292	66.318	66.338	66.351	66.357	66.356	66.349	66.334	66.313	66.285	66.251	66.209	66.161	66.106	66.045
RG	10	65.231	65.298	65.359	65.412	65.459	65.499	65.532	65.558	65.578	65.591	65.597	65.596	65.589	65.574	65.553	65.525	65.491	65.449	65.401	65.346	65.285
RF	10	65.200	65.268	65.328	65.381	65.428	65.468	65.501	65.528	65.547	65.560	65.566	65.565	65.558	65.543	65.522	65.495	65.460	65.419	65.370	65.315	65.254

SPAN 44 INCR. — FINISH GRADE ELEVATIONS AT POINTS

	DIST.	0	1	2	3	4	5	6	7	8	9	10	11	12	13	14	15	16
GDR 1	10	65.353	65.284	65.209	65.127	65.038	64.942	64.840	64.731	64.615	64.492	64.363	64.226	64.083	63.933	63.777	63.613	63.443
GDR 2	10	65.556	65.488	65.412	65.330	65.241	65.146	65.043	64.934	64.818	64.695	64.566	64.430	64.287	64.137	63.980	63.817	63.646
GDR 3	10	65.760	65.691	65.616	65.534	65.445	65.349	65.247	65.138	65.022	64.899	64.769	64.633	64.490	64.340	64.183	64.020	63.850
GDR 4	10	65.963	65.894	65.819	65.737	65.648	65.552	65.450	65.341	65.225	65.102	64.973	64.836	64.693	64.543	64.387	64.223	64.053
GDR 5	10	65.963	65.894	65.819	65.737	65.648	65.552	65.450	65.341	65.225	65.102	64.973	64.836	64.693	64.543	64.387	64.223	64.053
GDR 6	10	65.760	65.691	65.616	65.534	65.445	65.349	65.247	65.138	65.022	64.899	64.769	64.633	64.490	64.340	64.183	64.020	63.850
GDR 7	10	65.556	65.488	65.412	65.330	65.241	65.146	65.043	64.934	64.818	64.695	64.566	64.430	64.287	64.137	63.980	63.817	63.646
GDR 8	10	65.353	65.284	65.209	65.127	65.038	64.942	64.840	64.731	64.615	64.492	64.363	64.226	64.083	63.933	63.777	63.613	63.443

SPAN 44 INCR. — FINISH GRADE ELEVATIONS AT POINTS

	DIST.	0	1	2	3	4	5	6	7	8	9	10	11	12	13	14	15	16
LF	10	65.254	65.185	65.110	65.028	64.939	64.843	64.741	64.632	64.516	64.393	64.263	64.127	63.984	63.834	63.678	63.514	63.344
LG	10	65.285	65.216	65.141	65.059	64.970	64.874	64.772	64.663	64.547	64.424	64.294	64.158	64.015	63.865	63.708	63.545	63.375
LMG	10	66.045	65.976	65.901	65.819	65.730	65.634	65.532	65.423	65.301	65.184	65.054	64.918	64.775	64.625	64.468	64.305	64.135
PG	10	66.065	65.996	65.921	65.839	65.750	65.654	65.552	65.443	65.327	65.204	65.074	64.938	64.795	64.645	64.488	64.325	64.155
RMG	10	66.045	65.976	65.901	65.819	65.730	65.634	65.532	65.423	65.307	65.184	65.054	64.918	64.775	64.625	64.468	64.305	64.135
RG	10	65.285	65.216	65.141	65.059	64.970	64.874	64.772	64.663	64.547	64.424	64.294	64.158	64.015	63.865	63.708	63.545	63.375
RF	10	65.254	65.185	65.110	65.028	64.939	64.843	64.741	64.632	64.516	64.393	64.263	64.127	63.984	63.834	63.678	63.514	63.344

SPAN 45 INCR. — FINISH GRADE ELEVATIONS AT POINTS

	DIST.	0	1	2	3	4	5	6	7	8	9	10	11	12	13	14	15	16
GDR 1	9.047	63.443	63.283	63.118	62.947	62.771	62.589	62.401	62.208	62.009	61.805	61.595	61.380	61.159	60.933	60.701	60.463	60.220
GDR 2	9.047	63.646	63.487	63.321	63.150	62.974	62.792	62.604	62.411	62.213	62.008	61.799	61.583	61.362	61.136	60.904	60.667	60.424
GDR 3	9.047	63.850	63.690	63.525	63.354	63.177	62.995	62.808	62.615	62.416	62.212	62.002	61.787	61.566	61.339	61.107	60.870	60.627
GDR 4	9.047	64.053	63.893	63.728	63.557	63.381	63.199	63.011	62.818	62.619	62.415	62.205	61.990	61.769	61.543	61.311	61.073	60.830
GDR 5	9.047	64.053	63.893	63.728	63.557	63.381	63.199	63.011	62.818	62.619	62.415	62.205	61.990	61.769	61.543	61.311	61.073	60.830
GDR 6	9.047	63.850	63.690	63.525	63.354	63.177	62.995	62.808	62.615	62.416	62.212	62.002	61.787	61.566	61.339	61.107	60.870	60.627
GDR 7	9.047	63.646	63.487	63.321	63.150	62.974	62.792	62.604	62.411	62.213	62.008	61.799	61.583	61.362	61.136	60.904	60.667	60.424
GDR 8	9.047	63.443	63.283	63.118	62.947	62.771	62.589	62.401	62.208	62.009	61.805	61.595	61.380	61.159	60.933	60.701	60.463	60.220

SPAN 45 INCR. — FINISH GRADE ELEVATIONS AT POINTS

	DIST.	0	1	2	3	4	5	6	7	8	9	10	11	12	13	14	15	16
LF	9.047	63.344	63.184	63.019	62.848	62.671	62.489	62.302	62.109	61.910	61.706	61.496	61.281	61.060	60.834	60.602	60.364	60.121
LG	9.047	63.375	63.215	63.050	62.879	62.702	62.520	62.333	62.140	61.941	61.737	61.527	61.312	61.091	60.864	60.632	60.395	60.152
LMG	9.047	64.135	63.975	63.810	63.639	63.462	63.280	63.093	62.900	62.701	62.497	62.287	62.072	61.851	61.624	61.392	61.155	60.912
PG	9.047	64.155	63.995	63.830	63.659	63.482	63.300	63.113	62.920	62.721	62.517	62.307	62.092	61.871	61.644	61.412	61.175	60.932
RMG	9.047	64.135	63.975	63.810	63.639	63.462	63.280	63.093	62.900	62.701	62.497	62.287	62.072	61.851	61.624	61.392	61.155	60.912
RG	9.047	63.375	63.215	63.050	62.879	62.702	62.520	62.333	62.140	61.941	61.737	61.527	61.312	61.091	60.864	60.632	60.395	60.152
RF	9.047	63.344	63.184	63.019	62.848	62.671	62.489	62.302	62.109	61.910	61.706	61.496	61.281	61.060	60.834	60.602	60.364	60.121

SPAN 46 INCR. — FINISH GRADE ELEVATIONS AT POINTS

	DIST.	0	1	2	3	4	5	6	7	8	9	10	11	12	13	14	15	16
GDR 1	9.047	60.220	59.972	59.718	59.458	59.193	58.922	58.638	58.362	58.086	57.810	57.534	57.258	56.982	56.706	56.430	56.154	55.878
GDR 2	9.047	60.424	60.175	59.921	59.661	59.396	59.125	58.842	58.566	58.290	58.014	57.738	57.462	57.186	56.910	56.634	56.358	56.082
GDR 3	9.047	60.627	60.378	60.124	59.864	59.599	59.328	59.045	58.769	58.493	58.217	57.941	57.665	57.389	57.113	56.837	56.561	56.285
GDR 4	9.047	60.830	60.582	60.328	60.068	59.803	59.532	59.248	58.972	58.696	58.420	58.144	57.868	57.592	57.316	57.040	56.764	56.488
GDR 5	9.047	60.830	60.582	60.328	60.068	59.803	59.532	59.248	58.972	58.696	58.420	58.144	57.868	57.592	57.316	57.040	56.764	56.488
GDR 6	9.047	60.627	60.378	60.124	59.864	59.599	59.328	59.045	58.769	58.493	58.217	57.941	57.665	57.389	57.113	56.837	56.561	56.285
GDR 7	9.047	60.424	60.175	59.921	59.661	59.396	59.125	58.842	58.566	58.290	58.014	57.738	57.462	57.186	56.910	56.634	56.358	56.082
GDR 8	9.047	60.220	59.972	59.718	59.458	59.193	58.922	58.638	58.362	58.086	57.810	57.534	57.258	56.982	56.706	56.430	56.154	55.878

SPAN 46 INCR. — FINISH GRADE ELEVATIONS AT POINTS

	DIST.	0	1	2	3	4	5	6	7	8	9	10	11	12	13	14	15	16
LF	9.047	60.121	59.872	59.618	59.359	59.093	58.823	58.539	58.263	57.987	57.711	57.435	57.159	56.883	56.607	56.331	56.055	55.779
LG	9.047	60.152	59.903	59.649	59.389	59.124	58.853	58.570	58.294	58.018	57.742	57.466	57.190	56.914	56.638	56.362	56.086	55.810
LMG	9.047	60.912	60.663	60.409	60.149	59.884	59.613	59.330	59.054	58.778	58.502	58.226	57.950	57.674	57.398	57.122	56.846	56.570
PG	9.047	60.932	60.683	60.429	60.169	59.904	59.633	59.350	59.074	58.798	58.522	58.246	57.970	57.694	57.418	57.142	56.866	56.590
RMG	9.047	60.912	60.663	60.409	60.149	59.884	59.613	59.330	59.054	58.778	58.502	58.226	57.950	57.674	57.398	57.122	56.846	56.570
RG	9.047	60.152	59.903	59.649	59.389	59.124	58.853	58.570	58.294	58.018	57.742	57.466	57.190	56.914	56.638	56.362	56.086	55.810
RF	9.047	60.121	59.872	59.618	59.359	59.093	58.823	58.539	58.263	57.987	57.711	57.435	57.159	56.883	56.607	56.331	56.055	55.779

SPAN 47 INCR. — FINISH GRADE ELEVATIONS AT POINTS

	DIST.	0	1	2	3	4	5	6	7	8	9	10	11	12	13	14	15	16
GDR 1	9.047	55.878	55.602	55.326	55.050	54.774	54.498	54.222	53.946	53.670	53.394	53.118	52.842	52.566	52.290	52.014	51.738	51.462
GDR 2	9.047	56.082	55.806	55.530	55.254	54.978	54.701	54.425	54.149	53.873	53.597	53.321	53.045	52.769	52.493	52.217	51.941	51.665
GDR 3	9.047	56.285	56.009	55.733	55.457	55.181	54.905	54.629	54.353	54.077	53.801	53.525	53.249	52.973	52.697	52.421	52.145	51.869
GDR 4	9.047	56.488	56.212	55.936	55.660	55.384	55.108	54.832	54.556	54.280	54.004	53.728	53.452	53.176	52.900	52.624	52.348	52.072
GDR 5	9.047	56.488	56.212	55.936	55.660	55.384	55.108	54.832	54.556	54.280	54.004	53.728	53.452	53.176	52.900	52.624	52.348	52.072
GDR 6	9.047	56.285	56.009	55.733	55.457	55.181	54.905	54.629	54.353	54.077	53.801	53.525	53.249	52.973	52.697	52.421	52.145	51.869
GDR 7	9.047	56.082	55.806	55.530	55.254	54.978	54.701	54.425	54.149	53.873	53.597	53.321	53.045	52.769	52.493	52.217	51.941	51.665
GDR 8	9.047	55.878	55.602	55.326	55.050	54.774	54.498	54.222	53.946	53.670	53.394	53.118	52.842	52.566	52.290	52.014	51.738	51.462

SPAN 47 INCR. — FINISH GRADE ELEVATIONS AT POINTS

	DIST.	0	1	2	3	4	5	6	7	8	9	10	11	12	13	14	15	16
LF	9.047	55.779	55.503	55.227	54.951	54.675	54.399	54.123	53.847	53.571	53.295	53.019	52.743	52.467	52.191	51.915	51.639	51.363
LG	9.047	55.810	55.534	55.258	54.982	54.706	54.430	54.154	53.878	53.602	53.326	53.050	52.774	52.498	52.222	51.946	51.670	51.394
LMG	9.047	56.570	56.294	56.018	55.742	55.466	55.190	54.914	54.638	54.362	54.086	53.810	53.534	53.258	52.982	52.706	52.430	52.154
PG	9.047	56.590	56.314	56.038	55.762	55.486	55.210	54.934	54.658	54.382	54.106	53.830	53.554	53.278	53.002	52.726	52.450	52.174
RMG	9.047	56.570	56.294	56.018	55.742	55.466	55.190	54.914	54.638	54.362	54.086	53.810	53.534	53.258	52.982	52.706	52.430	52.154
RG	9.047	55.810	55.534	55.258	54.982	54.706	54.430	54.154	53.878	53.602	53.326	53.050	52.774	52.498	52.222	51.946	51.670	51.394
RF	9.047	55.779	55.503	55.227	54.951	54.675	54.399	54.123	53.847	53.571	53.295	53.019	52.743	52.467	52.191	51.915	51.639	51.363

HDR
01 MAY 96

FINLEY McNARY/JANSSEN SPAANS
a Joint Venture

Finley McNary Engineers, Inc
1391 Timberlane Road Suite 200
Tallahassee, Florida 32312-1721

Janssen & Spaans Engineers, Inc.
2825 East 56th Street
Indianapolis, Indiana 46220

REVISIONS

DATE	BY	DESCRIPTION	DATE	BY	DESCRIPTION	DATE	BY	DESCRIPTION	DATE	BY	

	NAME	DATE
DR. BY	J.L.S.	1/96
CHK. BY	C.W.N.	1/96
SUPV.	H.D.R.	1/96

FINLEY McNARY/JANSSEN SPAANS

BOARD OF COUNTY COMMISSIONERS
LEE, COUNTY, FLORIDA
DEPARTMENT OF TRANSPORTATION

MIDPOINT BRIDGE
FINISH GRADE ELEVATIONS (II)

31

SPAN 48 — FINISH GRADE ELEVATIONS AT POINTS

SPAN 48	INCR. DIST.	0	1	2	3	4	5	6	7	8	9	10	11	12	13	14	15	16
GDR 1	9.047	51.462	51.186	50.910	50.634	50.358	50.082	49.806	49.530	49.254	48.978	48.702	48.426	48.150	47.874	47.598	47.322	47.046
GDR 2	9.047	51.665	51.389	51.113	50.837	50.561	50.285	50.009	49.733	49.457	49.181	48.905	48.629	48.353	48.077	47.801	47.525	47.249
GDR 3	9.047	51.869	51.593	51.317	51.041	50.765	50.488	50.212	49.936	49.660	49.384	49.108	48.832	48.556	48.280	48.004	47.728	47.452
GDR 4	9.047	52.072	51.796	51.520	51.244	50.968	50.692	50.416	50.140	49.864	49.588	49.312	49.036	48.760	48.484	48.208	47.932	47.656
GDR 5	9.047	52.072	51.796	51.520	51.244	50.968	50.692	50.416	50.140	49.864	49.588	49.312	49.036	48.760	48.484	48.208	47.932	47.656
GDR 6	9.047	51.869	51.593	51.317	51.041	50.765	50.488	50.212	49.936	49.660	49.384	49.108	48.832	48.556	48.280	48.004	47.728	47.452
GDR 7	9.047	51.665	51.389	51.113	50.837	50.561	50.285	50.009	49.733	49.457	49.181	48.905	48.629	48.353	48.077	47.801	47.525	47.249
GDR 8	9.047	51.462	51.186	50.910	50.634	50.358	50.082	49.806	49.530	49.254	48.978	48.702	48.426	48.150	47.874	47.598	47.322	47.046

SPAN 48 — FINISH GRADE ELEVATIONS AT POINTS

SPAN 48	INCR. DIST.	0	1	2	3	4	5	6	7	8	9	10	11	12	13	14	15	16
LF	9.047	51.363	51.087	50.811	50.535	50.259	49.983	49.707	49.431	49.155	48.879	48.603	48.327	48.051	47.774	47.498	47.222	46.946
LG	9.047	51.394	51.118	50.842	50.566	50.290	50.013	49.737	49.461	49.185	48.909	48.633	48.357	48.081	47.805	47.529	47.253	46.977
LMG	9.047	52.154	51.878	51.602	51.326	51.050	50.773	50.497	50.221	49.945	49.669	49.393	49.117	48.841	48.565	48.289	48.013	47.737
PG	9.047	52.174	51.898	51.622	51.346	51.070	50.793	50.517	50.241	49.965	49.689	49.413	49.137	48.861	48.585	48.309	48.033	47.757
RMG	9.047	52.154	51.878	51.602	51.326	51.050	50.773	50.497	50.221	49.945	49.669	49.393	49.117	48.841	48.565	48.289	48.013	47.737
RG	9.047	51.394	51.118	50.842	50.566	50.290	50.013	49.737	49.461	49.185	48.909	48.633	48.357	48.081	47.805	47.529	47.253	46.977
RF	9.047	51.363	51.087	50.811	50.535	50.259	49.983	49.707	49.431	49.155	48.879	48.603	48.327	48.051	47.774	47.498	47.222	46.946

SPAN 49 — FINISH GRADE ELEVATIONS AT POINTS

SPAN 49	INCR. DIST.	0	1	2	3	4	5	6	7	8	9	10	11	12	13	14	15	16
GDR 1	9.047	47.046	46.770	46.494	46.218	45.942	45.666	45.389	45.113	44.837	44.561	44.285	44.009	43.733	43.457	43.181	42.905	42.629
GDR 2	9.047	47.249	46.973	46.697	46.421	46.145	45.869	45.593	45.317	45.041	44.765	44.489	44.213	43.937	43.661	43.385	43.109	42.833
GDR 3	9.047	47.452	47.176	46.900	46.624	46.348	46.072	45.796	45.520	45.244	44.968	44.692	44.416	44.140	43.864	43.588	43.312	43.036
GDR 4	9.047	47.656	47.380	47.104	46.828	46.552	46.276	45.999	45.723	45.447	45.171	44.895	44.619	44.343	44.067	43.791	43.515	43.239
GDR 5	9.047	47.656	47.380	47.104	46.828	46.552	46.276	45.999	45.723	45.447	45.171	44.895	44.619	44.343	44.067	43.791	43.515	43.239
GDR 6	9.047	47.452	47.176	46.900	46.624	46.348	46.072	45.796	45.520	45.244	44.968	44.692	44.416	44.140	43.864	43.588	43.312	43.036
GDR 7	9.047	47.249	46.973	46.697	46.421	46.145	45.869	45.593	45.317	45.041	44.765	44.489	44.213	43.937	43.661	43.385	43.109	42.833
GDR 8	9.047	47.046	46.770	46.494	46.218	45.942	45.666	45.389	45.113	44.837	44.561	44.285	44.009	43.733	43.457	43.181	42.905	42.629

SPAN 49 — FINISH GRADE ELEVATIONS AT POINTS

SPAN 49	INCR. DIST.	0	1	2	3	4	5	6	7	8	9	10	11	12	13	14	15	16
LF	9.047	46.946	46.670	46.394	46.118	45.842	45.566	45.290	45.014	44.738	44.462	44.186	43.910	43.634	43.358	43.082	42.806	42.530
LG	9.047	46.977	46.701	46.425	46.149	45.873	45.597	45.321	45.045	44.769	44.493	44.217	43.941	43.665	43.389	43.113	42.837	42.561
LMG	9.047	47.737	47.461	47.185	46.909	46.633	46.357	46.081	45.805	45.529	45.253	44.977	44.701	44.425	44.149	43.873	43.597	43.321
PG	9.047	47.757	47.481	47.205	46.929	46.653	46.377	46.101	45.825	45.549	45.273	44.997	44.721	44.445	44.169	43.893	43.617	43.341
RMG	9.047	47.737	47.461	47.185	46.909	46.633	46.357	46.081	45.805	45.529	45.253	44.977	44.701	44.425	44.149	43.873	43.597	43.321
RG	9.047	46.977	46.701	46.425	46.149	45.873	45.597	45.321	45.045	44.769	44.493	44.217	43.941	43.665	43.389	43.113	42.837	42.561
RF	9.047	46.946	46.670	46.394	46.118	45.842	45.566	45.290	45.014	44.738	44.462	44.186	43.910	43.634	43.358	43.082	42.806	42.530

SPAN 50 — FINISH GRADE ELEVATIONS AT POINTS

SPAN 50	INCR. DIST.	0	1	2	3	4	5	6	7	8	9	10	11	12	13	14	15	16
GDR 1	9.047	42.629	42.353	42.077	41.801	41.525	41.249	40.973	40.697	40.421	40.145	39.869	39.593	39.317	39.041	38.765	38.489	38.213
GDR 2	9.047	42.833	42.557	42.281	42.005	41.729	41.453	41.176	40.900	40.624	40.348	40.072	39.796	39.520	39.244	38.968	38.692	38.416
GDR 3	9.047	43.036	42.760	42.484	42.208	41.932	41.656	41.380	41.104	40.828	40.552	40.276	40.000	39.724	39.448	39.172	38.896	38.620
GDR 4	9.047	43.239	42.963	42.687	42.411	42.135	41.859	41.583	41.307	41.031	40.755	40.479	40.203	39.927	39.651	39.375	39.099	38.823
GDR 5	9.047	43.239	42.963	42.687	42.411	42.135	41.859	41.583	41.307	41.031	40.755	40.479	40.203	39.927	39.651	39.375	39.099	38.823
GDR 6	9.047	43.036	42.760	42.484	42.208	41.932	41.656	41.380	41.104	40.828	40.552	40.276	40.000	39.724	39.448	39.172	38.896	38.620
GDR 7	9.047	42.833	42.557	42.281	42.005	41.729	41.453	41.176	40.900	40.624	40.348	40.072	39.796	39.520	39.244	38.968	38.692	38.416
GDR 8	9.047	42.629	42.353	42.077	41.801	41.525	41.249	40.973	40.697	40.421	40.145	39.869	39.593	39.317	39.041	38.765	38.489	38.213

SPAN 50 — FINISH GRADE ELEVATIONS AT POINTS

SPAN 50	INCR. DIST.	0	1	2	3	4	5	6	7	8	9	10	11	12	13	14	15	16
LF	9.047	42.530	42.254	41.978	41.702	41.426	41.150	40.874	40.598	40.322	40.046	39.770	39.494	39.218	38.942	38.666	38.390	38.114
LG	9.047	42.561	42.285	42.009	41.733	41.457	41.181	40.905	40.629	40.353	40.077	39.801	39.525	39.249	38.973	38.697	38.421	38.145
LMG	9.047	43.321	43.045	42.769	42.493	42.217	41.941	41.665	41.389	41.113	40.837	40.561	40.285	40.009	39.733	39.457	39.181	38.905
PG	9.047	43.341	43.065	42.789	42.513	42.237	41.961	41.685	41.409	41.133	40.857	40.581	40.305	40.029	39.753	39.477	39.201	38.925
RMG	9.047	43.321	43.045	42.769	42.493	42.217	41.941	41.665	41.389	41.113	40.837	40.561	40.285	40.009	39.733	39.457	39.181	38.905
RG	9.047	42.561	42.285	42.009	41.733	41.457	41.181	40.905	40.629	40.353	40.077	39.801	39.525	39.249	38.973	38.697	38.421	38.145
RF	9.047	42.530	42.254	41.978	41.702	41.426	41.150	40.874	40.598	40.322	40.046	39.770	39.494	39.218	38.942	38.666	38.390	38.114

SPAN 51 — FINISH GRADE ELEVATIONS AT POINTS

SPAN 51	INCR. DIST.	0	1	2	3	4	5	6	7	8	9	10	11	12	13	14	15	16
GDR 1	9.047	38.213	37.937	37.661	37.385	37.109	36.833	36.557	36.281	36.005	35.729	35.453	35.177	34.901	34.625	34.349	34.073	33.797
GDR 2	9.047	38.416	38.140	37.864	37.588	37.312	37.036	36.760	36.484	36.208	35.932	35.656	35.380	35.104	34.828	34.552	34.276	34.000
GDR 3	9.047	38.620	38.344	38.068	37.792	37.516	37.240	36.964	36.681	36.411	36.135	35.859	35.583	35.307	35.031	34.755	34.479	34.203
GDR 4	9.047	38.823	38.547	38.211	37.995	37.719	37.443	37.167	36.891	36.615	36.339	36.063	35.781	35.511	35.235	34.959	34.683	34.407
GDR 5	9.047	38.823	38.547	38.271	37.995	37.719	37.443	37.167	36.891	36.615	36.339	36.063	35.787	35.511	35.235	34.959	34.683	34.407
GDR 6	9.047	38.620	38.344	38.068	37.792	37.516	37.240	36.964	36.687	36.411	36.135	35.859	35.583	35.307	35.031	34.755	34.479	34.203
GDR 7	9.047	38.416	38.140	37.864	37.588	37.312	37.036	36.760	36.484	36.208	35.932	35.656	35.380	35.104	34.828	34.552	34.276	34.000
GDR 8	9.047	38.213	37.937	37.661	37.385	37.109	36.833	36.557	36.281	36.005	35.729	35.453	35.177	34.901	34.625	34.349	34.073	33.797

SPAN 51 — FINISH GRADE ELEVATIONS AT POINTS

SPAN 51	INCR. DIST.	0	1	2	3	4	5	6	7	8	9	10	11	12	13	14	15	16
LF	9.047	38.114	37.838	37.562	37.286	37.010	36.734	36.458	36.182	35.906	35.630	35.354	35.078	34.802	34.526	34.250	33.973	33.697
LG	9.047	38.145	37.869	37.593	37.317	37.041	36.765	36.489	36.212	35.936	35.660	35.384	35.108	34.832	34.556	34.280	34.004	33.728
LMG	9.047	38.905	38.629	38.353	38.077	37.801	37.525	37.249	36.972	36.696	36.420	36.144	35.868	35.592	35.316	35.040	34.764	34.488
PG	9.047	38.925	38.649	38.373	38.097	37.821	37.545	37.269	36.992	36.716	36.440	36.164	35.888	35.612	35.336	35.060	34.784	34.508
RMG	9.047	38.905	38.629	38.353	38.077	37.801	37.525	37.249	36.972	36.696	36.420	36.144	35.868	35.592	35.316	35.040	34.764	34.488
RG	9.047	38.145	37.869	37.593	37.317	37.041	36.765	36.489	36.212	35.936	35.660	35.384	35.108	34.832	34.556	34.280	34.004	33.728
RF	9.047	38.114	37.838	37.562	37.286	37.010	36.734	36.458	36.182	35.906	35.630	35.354	35.078	34.802	34.526	34.250	33.973	33.697

SPAN 52 — FINISH GRADE ELEVATIONS AT POINTS

SPAN 52	INCR. DIST.	0	1	2	3	4	5	6	7	8	9	10	11	12	13	14	15	16
GDR 1	9.047	33.797	33.521	33.245	32.969	32.693	32.417	32.141	31.864	31.588	31.312	31.036	30.760	30.484	30.208	29.932	29.656	29.380
GDR 2	9.047	34.000	33.724	33.448	33.172	32.896	32.620	32.344	32.068	31.792	31.516	31.240	30.964	30.688	30.412	30.136	29.860	29.584
GDR 3	9.047	34.203	33.927	33.651	33.375	33.099	32.823	32.547	32.271	31.995	31.719	31.443	31.167	30.891	30.615	30.339	30.063	29.787
GDR 4	9.047	34.407	34.131	33.855	33.579	33.303	33.027	32.751	32.474	32.198	31.922	31.646	31.370	31.094	30.818	30.542	30.266	29.990
GDR 5	9.047	34.407	34.131	33.855	33.579	33.303	33.027	32.751	32.474	32.198	31.922	31.646	31.370	31.094	30.818	30.542	30.266	29.990
GDR 6	9.047	34.203	33.927	33.651	33.375	33.099	32.823	32.547	32.271	31.995	31.719	31.443	31.167	30.891	30.615	30.339	30.063	29.787
GDR 7	9.047	34.000	33.724	33.448	33.172	32.896	32.620	32.344	32.068	31.792	31.516	31.240	30.964	30.688	30.412	30.136	29.860	29.584
GDR 8	9.047	33.797	33.521	33.245	32.969	32.693	32.417	32.141	31.864	31.588	31.312	31.036	30.760	30.484	30.208	29.932	29.656	29.380

SPAN 52 — FINISH GRADE ELEVATIONS AT POINTS

SPAN 52	INCR. DIST.	0	1	2	3	4	5	6	7	8	9	10	11	12	13	14	15	16
LF	9.047	33.697	33.421	33.145	32.869	32.593	32.317	32.041	31.765	31.489	31.213	30.937	30.661	30.385	30.109	29.833	29.557	29.281
LG	9.047	33.728	33.452	33.176	32.900	32.624	32.348	32.072	31.796	31.520	31.244	30.968	30.692	30.416	30.140	29.864	29.588	29.312
LMG	9.047	34.488	34.212	33.936	33.660	33.384	33.108	32.832	32.556	32.280	32.004	31.728	31.452	31.176	30.900	30.624	30.348	30.072
PG	9.047	34.508	34.232	33.956	33.680	33.404	33.128	32.852	32.576	32.300	32.024	31.748	31.472	31.196	30.920	30.644	30.368	30.092
RMG	9.047	34.488	34.212	33.936	33.660	33.384	33.108	32.832	32.556	32.280	32.004	31.728	31.452	31.176	30.900	30.624	30.348	30.072
RG	9.047	33.728	33.452	33.176	32.900	32.624	32.348	32.072	31.796	31.520	31.244	30.968	30.692	30.416	30.140	29.864	29.588	29.312
RF	9.047	33.697	33.421	33.145	32.869	32.593	32.317	32.041	31.765	31.489	31.213	30.937	30.661	30.385	30.109	29.833	29.557	29.281

SPAN 53 — FINISH GRADE ELEVATIONS AT POINTS

SPAN 53	INCR. DIST.	0	1	2	3	4	5	6	7	8	9	10	11	12	13	14	15	16
GDR 1	9.047	29.380	29.104	28.828	28.552	28.276	28.000	27.726	27.456	27.191	26.931	26.676	26.426	26.180	25.940	25.705	25.475	25.250
GDR 2	9.047	29.584	29.308	29.032	28.756	28.480	28.204	27.929	27.659	27.394	27.134	26.879	26.629	26.384	26.144	25.909	25.679	25.453
GDR 3	9.047	29.787	29.511	29.235	28.959	28.683	28.407	28.133	27.863	27.597	27.337	27.082	26.832	26.587	26.347	26.112	25.882	25.657
GDR 4	9.047	29.990	29.714	29.438	29.162	28.886	28.610	28.336	28.066	27.801	27.541	27.286	27.036	26.790	26.550	26.315	26.085	25.860
GDR 5	9.047	29.990	29.714	29.438	29.162	28.886	28.610	28.336	28.066	27.801	27.541	27.286	27.036	26.790	26.550	26.315	26.085	25.860
GDR 6	9.047	29.787	29.511	29.235	28.959	28.683	28.407	28.133	27.863	27.597	27.337	27.082	26.832	26.587	26.347	26.112	25.882	25.657
GDR 7	9.047	29.584	29.308	29.032	28.756	28.480	28.204	27.929	27.659	27.394	27.134	26.879	26.629	26.384	26.144	25.909	25.679	25.453
GDR 8	9.047	29.380	29.104	28.828	28.552	28.276	28.000	27.726	27.456	27.191	26.931	26.676	26.426	26.180	25.940	25.705	25.475	25.250

SPAN 53 — FINISH GRADE ELEVATIONS AT POINTS

SPAN 53	INCR. DIST.	0	1	2	3	4	5	6	7	8	9	10	11	12	13	14	15	16
LF	9.047	29.281	29.005	28.729	28.453	28.177	27.901	27.627	27.357	27.092	26.832	26.576	26.326	26.081	25.841	25.606	25.376	25.151
LG	9.047	29.312	29.036	28.760	28.484	28.208	27.932	27.658	27.388	27.122	26.862	26.607	26.357	26.112	25.872	25.637	25.407	25.182
LMG	9.047	30.072	29.796	29.520	29.244	28.968	28.692	28.418	28.148	27.882	27.622	27.367	27.117	26.872	26.632	26.397	26.167	25.942
PG	9.047	30.092	29.816	29.540	29.264	28.988	28.712	28.438	28.168	27.902	27.642	27.387	27.137	26.892	26.652	26.417	26.187	25.962
RMG	9.047	30.072	29.796	29.520	29.244	28.968	28.692	28.418	28.148	27.882	27.622	27.367	27.117	26.872	26.632	26.397	26.167	25.942
RG	9.047	29.312	29.036	28.760	28.484	28.208	27.932	27.658	27.388	27.122	26.862	26.607	26.357	26.112	25.872	25.637	25.407	25.182
RF	9.047	29.281	29.005	28.729	28.453	28.177	27.901	27.627	27.357	27.092	26.832	26.576	26.326	26.081	25.841	25.606	25.376	25.151

SPAN 54 — FINISH GRADE ELEVATIONS AT POINTS

SPAN 54	INCR. DIST.	0	1	2	3	4	5	6	7	8	9	10	11	12	13	14	15	16
GDR 1	9.047	25.250	25.030	24.815	24.605	24.400	24.199	24.004	23.814	23.629	23.449	23.274	23.104	22.938	22.778	22.623	22.473	22.328
GDR 2	9.047	25.453	25.233	25.018	24.808	24.603	24.403	24.208	24.018	23.832	23.652	23.477	23.307	23.142	22.981	22.826	22.676	22.531
GDR 3	9.047	25.657	25.437	25.222	25.011	24.806	24.606	24.411	24.221	24.036	23.856	23.680	23.510	23.345	23.185	23.030	22.879	22.734
GDR 4	9.047	25.860	25.640	25.425	25.215	25.010	24.809	24.614	24.424	24.239	24.059	23.884	23.714	23.548	23.388	23.233	23.083	22.938
GDR 5	9.047	25.860	25.640	25.425	25.215	25.010	24.809	24.614	24.424	24.244	24.072	23.905	23.743	23.586	23.433	23.286	23.144	23.007
GDR 6	9.047	25.657	25.437	25.222	25.011	24.806	24.606	24.411	24.221	24.052	23.896	23.744	23.598	23.457	23.321	23.189	23.063	22.942
GDR 7	9.047	25.453	25.233	25.018	24.808	24.603	24.403	24.208	24.018	23.859	23.719	23.584	23.454	23.328	23.208	23.093	22.982	22.877
GDR 8	9.047	25.250	25.030	24.815	24.605	24.400	24.199	24.004	23.814	23.667	23.543	23.423	23.309	23.200	23.095	22.996	22.902	22.812

SPAN 54 — FINISH GRADE ELEVATIONS AT POINTS

SPAN 54	INCR. DIST.	0	1	2	3	4	5	6	7	8	9	10	11	12	13	14	15	16
LF	9.047	25.151	24.931	24.716	24.506	24.300	24.100	23.905	23.715	23.530	23.350	23.175	23.004	22.839	22.679	22.524	22.374	22.228
LG	9.047	25.182	24.962	24.747	24.536	24.331	24.131	23.936	23.746	23.561	23.381	23.205	23.035	22.870	22.710	22.555	22.404	22.259
LMG	9.047	25.942	25.722	25.507	25.296	25.091	24.891	24.696	24.506	24.321	24.141	23.965	23.795	23.630	23.470	23.315	23.164	23.019
PG	9.047	25.962	25.742	25.527	25.316	25.111	24.911	24.716	24.526	24.341	24.161	23.985	23.815	23.650	23.490	23.335	23.184	23.039
RMG	9.047	25.942	25.722	25.507	25.296	25.091	24.891	24.696	24.506	24.322	24.143	23.970	23.801	23.637	23.479	23.325	23.176	23.033
RG	9.047	25.182	24.962	24.747	24.536	24.331	24.131	23.936	23.746	23.602	23.483	23.369	23.260	23.156	23.057	22.963	22.874	22.790
RF	9.047	25.151	24.931	24.716	24.506	24.300	24.100	23.905	23.715	23.573	23.456	23.345	23.238	23.137	23.040	22.949	22.862	22.781

SPAN 55 — FINISH GRADE ELEVATIONS AT POINTS

SPAN 55	INCR. DIST.	0	1	2	3	4	5	6	7	8	9	10
GDR 1	9.392	22.299	22.154	22.014	21.879	21.750	21.626	21.507	21.394	21.286	21.184	21.087
GDR 2	9.392	22.484	22.339	22.199	22.064	21.935	21.811	21.692	21.579	21.471	21.369	21.272
GDR 3	9.392	22.669	22.524	22.384	22.249	22.120	21.996	21.877	21.764	21.656	21.554	21.457
GDR 4	9.392	22.854	22.709	22.569	22.434	22.305	22.181	22.062	21.949	21.841	21.739	21.642
GDR 5	9.392	23.039	22.894	22.754	22.619	22.490	22.366	22.247	22.134	22.026	21.924	21.827
GDR 6	9.392	22.980	22.850	22.725	22.605	22.491	22.382	22.279	22.181	22.088	22.001	21.919
GDR 7	9.392	22.921	22.806	22.696	22.591	22.492	22.399	22.310	22.227	22.149	22.077	22.010
GDR 8	9.392	22.862	22.762	22.667	22.578	22.494	22.415	22.342	22.274	22.211	22.154	22.102
GDR 9	9.392	22.803	22.718	22.638	22.564	22.495	22.431	22.373	22.320	22.273	22.230	22.194

SPAN 55 — FINISH GRADE ELEVATIONS AT POINTS

SPAN 55	INCR. DIST.	0	1	2	3	4	5	6	7	8	9	10
LF	9.392	22.228	22.083	21.943	21.808	21.679	21.555	21.436	21.323	21.216	21.113	21.016
LG	9.392	22.259	22.114	21.974	21.839	21.710	21.586	21.467	21.354	21.246	21.144	21.047
LMG	9.392	23.019	22.874	22.734	22.599	22.470	22.346	22.227	22.114	22.006	21.904	21.807
PG	9.392	23.039	22.894	22.754	22.619	22.490	22.366	22.247	22.134	22.026	21.924	21.827
RMG	9.392	23.033	22.889	22.751	22.618	22.490	22.368	22.251	22.139	22.033	21.932	21.837
RG	9.392	22.790	22.709	22.632	22.561	22.495	22.435	22.380	22.330	22.286	22.247	22.214
RF	9.392	22.781	22.701	22.627	22.559	22.495	22.437	22.385	22.338	22.296	22.260	22.229

6 MAY 9_

FINLEY McNARY/JANSSEN SPAANS
a Joint Venture

Finley McNary Engineers, Inc
1391 Timberlane Road Suite 200
Tallahassee, Florida 32312-1771

Janssen & Spaans Engineers, Inc.
2825 East 56th Street
Indianapolis, Indiana 46220

REVISIONS

DATE	BY	DESCRIPTION	DATE	BY	DESCRIPTION	DATE	BY	DESCRIPTION	DATE	BY	DESCRIPTION

	NAME	DATE
DR. BY	J.J.S.	1/96
CHK. BY	C.W.N.	1/96
SUPV.	H.D.R.	1/96

FINLEY McNARY/JANSSEN SPAANS

BOARD OF COUNTY COMMISSIONERS
LEE, COUNTY, FLORIDA
DEPARTMENT OF TRANSPORTATION

MIDPOINT BRIDGE
FINISH GRADE ELEVATIONS (12)

PROJECT NO.	SHEET NO.
5896	C-63A

BX1-73

SPAN 56 — FINISH GRADE ELEVATIONS AT POINTS

	INCR. DIST.	0	1	2	3	4	5	6	7	8	9	10
GDR 1	9.392	21.087	20.995	20.909	20.828	20.753	20.683	20.618	20.506	20.392	20.284	20.181
GDR 2	9.392	21.272	21.180	21.094	21.013	20.938	20.868	20.803	20.704	20.605	20.512	20.424
GDR 3	9.392	21.457	21.365	21.279	21.198	21.123	21.053	20.988	20.903	20.819	20.740	20.667
GDR 4	9.392	21.642	21.550	21.464	21.383	21.308	21.238	21.173	21.101	21.032	20.968	20.910
GDR 5	9.392	21.827	21.735	21.649	21.568	21.493	21.423	21.358	21.299	21.245	21.196	21.153
GDR 6	9.392	21.919	21.842	21.771	21.705	21.645	21.590	21.540	21.496	21.457	21.423	21.395
GDR 7	9.392	22.010	21.949	21.893	21.842	21.797	21.757	21.722	21.693	21.669	21.651	21.638
GDR 8	9.392	22.102	22.056	22.015	21.979	21.949	21.924	21.904	21.890	21.881	21.878	21.880
GDR 9	9.392	22.194	22.162	22.136	22.116	22.101	22.091	22.086	22.087	22.094	22.105	22.123

SPAN 56 — FINISH GRADE ELEVATIONS AT POINTS

	INCR. DIST.	0	1	2	3	4	5	6	7	8	9	10
LF	9.392	21.016	20.924	20.838	20.757	20.682	20.612	20.547	20.488	20.434	20.385	20.342
LG	9.392	21.047	20.955	20.869	20.788	20.713	20.643	20.578	20.519	20.465	20.416	20.373
LMG	9.392	21.807	21.715	21.629	21.548	21.473	21.403	21.338	21.279	21.225	21.176	21.133
PG	9.392	21.827	21.735	21.649	21.568	21.493	21.423	21.358	21.299	21.245	21.196	21.153
RMG	9.392	21.837	21.747	21.662	21.583	21.509	21.441	21.378	21.320	21.268	21.221	21.179
RG	9.392	22.214	22.186	22.163	22.146	22.134	22.127	22.126	22.130	22.140	22.155	22.175
RF	9.392	22.229	22.203	22.183	22.168	22.159	22.155	22.156	22.163	22.175	22.193	22.215

SPAN 57 — FINISH GRADE ELEVATIONS AT POINTS

	INCR. DIST.	0	1	2	3	4	5	6	7	8	9	10
GDR 1	9.352	20.181	20.083	19.990	19.903	19.822	19.745	19.674	19.609	19.548	19.488	19.428
GDR 2	9.392	20.424	20.341	20.263	20.191	20.125	20.063	20.008	19.957	19.911	19.866	19.821
GDR 3	9.392	20.667	20.599	20.537	20.479	20.428	20.381	20.341	20.305	20.274	20.244	20.214
GDR 4	9.392	20.910	20.857	20.810	20.768	20.731	20.700	20.674	20.653	20.637	20.622	20.607
GDR 5	9.392	21.153	21.115	21.083	21.056	21.034	21.018	21.007	21.001	21.000	21.000	21.000
GDR 6	9.392	21.395	21.373	21.355	21.343	21.337	21.335	21.340	21.349	21.363	21.378	21.393
GDR 7	9.392	21.638	21.630	21.628	21.631	21.639	21.653	21.672	21.697	21.726	21.756	21.786
GDR 8	9.392	21.880	21.888	21.900	21.919	21.942	21.971	22.005	22.045	22.089	22.134	22.179
GDR 9	9.392	22.123	22.145	22.173	22.206	22.245	22.289	22.338	22.393	22.452	22.512	22.573

SPAN 57 — FINISH GRADE ELEVATIONS AT POINTS

	INCR. DIST.	0	1	2	3	4	5	6	7	8	9	10
LF	9.392	20.088	19.984	19.886	19.793	19.706	19.624	19.547	19.476	19.409	19.343	19.277
LG	9.392	20.128	20.027	19.931	19.841	19.756	19.677	19.602	19.534	19.469	19.406	19.343
LMG	9.392	21.127	21.087	21.053	21.024	21.001	20.983	20.971	20.964	20.961	20.959	20.958
PG	9.392	21.153	21.115	21.083	21.056	21.034	21.018	21.007	21.001	21.000	21.000	21.000
RMG	9.392	21.179	21.143	21.112	21.087	21.067	21.052	21.043	21.039	21.039	21.041	21.043
RG	9.392	22.175	22.201	22.232	22.268	22.310	22.358	22.410	22.468	22.531	22.594	22.658
RF	9.392	22.215	22.244	22.277	22.316	22.361	22.411	22.466	22.526	22.591	22.657	22.723

SPAN 58 — FINISHED GRADE ELEVATIONS AT POINTS

	INCR. DIST.	0	1	2	3	4	5	6	7 F	8	9	10
GDR 1	9.209	19.428	19.359	19.291	19.225	19.161	19.099	19.039	18.982 F	18.927	18.876	18.854
GDR 2	9.254	19.821	19.767	19.714	19.663	19.614	19.567	19.522	19.480 F	19.440	19.404	19.391
GDR 3	9.300	20.214	20.175	20.137	20.101	20.067	20.035	20.005	19.978 F	19.953	19.932	19.927
GDR 4	9.345	20.607	20.583	20.560	20.539	20.520	20.503	20.488	20.476 F	20.466	20.460	20.463
GDR 5	9.391	21.000	20.991	20.983	20.977	20.973	20.971	20.971	20.974 F	20.980	20.988	21.000
GDR 6	9.436	21.393	21.399	21.406	21.415	21.426	21.439	21.454	21.472 F	21.493	21.516	21.537
GDR 7	9.482	21.786	21.807	21.829	21.853	21.879	21.907	21.937	21.970 F	22.006	22.044	22.073
GDR 8	9.527	22.179	22.215	22.252	22.291	22.332	22.375	22.420	22.468 F	22.519	22.572	22.610
GDR 9	9.573	22.572	22.623	22.675	22.729	22.785	22.843	22.903	22.966 F	23.032	23.101	23.146

SPAN 58 — FINISHED GRADE ELEVATIONS AT POINTS

	INCR. DIST.	0	1	2	3	4	5	6	7 F	8	9	10
LF	9.192	19.277	19.211	19.146	19.080	19.014	18.948	18.882	18.817 F	18.751	18.685	18.649
LG	9.200	19.343	19.279	19.216	19.153	19.090	19.026	18.963	18.900 F	18.836	18.773	18.738
LMG	9.387	20.958	20.956	20.954	20.953	20.951	20.949	20.948	20.946 F	20.945	20.943	20.942
PG	9.392	21.000	21.000	21.000	21.000	21.000	21.000	21.000	21.000 F	21.000	21.000	21.000
RMG	9.397	21.042	21.044	21.046	21.047	21.049	21.051	21.052	21.054 F	21.055	21.057	21.058
RG	9.583	22.657	22.721	22.784	22.847	22.910	22.974	23.037	23.100 F	23.164	23.227	23.262
RF	9.591	22.723	22.789	22.854	22.920	22.986	23.052	23.118	23.183 F	23.249	23.315	23.351

SPAN 59 — FINISHED GRADE ELEVATIONS AT POINTS

	INCR. DIST.	0	1	2	3	4	5	6	7 F	8	9	10
GDR 1	9.209	18.854	18.842	18.833	18.826	18.822	18.821	18.822	18.826 F	18.833	18.842	18.854
GDR 2	9.254	19.391	19.379	19.369	19.363	19.359	19.358	19.359	19.363 F	19.369	19.379	19.390
GDR 3	9.300	19.927	19.915	19.906	19.899	19.895	19.894	19.895	19.899 F	19.906	19.915	19.927
GDR 4	9.345	20.463	20.452	20.442	20.436	20.432	20.430	20.432	20.436 F	20.442	20.452	20.463
GDR 5	9.391	21.000	20.988	20.979	20.972	20.968	20.967	20.968	20.972 F	20.979	20.988	21.000
GDR 6	9.436	21.537	21.524	21.515	21.508	21.504	21.503	21.504	21.508 F	21.515	21.524	21.537
GDR 7	9.482	22.073	22.061	22.051	22.045	22.041	22.039	22.041	22.045 F	22.051	22.061	22.073
GDR 8	9.527	22.609	22.597	22.588	22.581	22.577	22.577	22.577	22.581 F	22.588	22.597	22.609
GDR 9	9.573	23.146	23.134	23.124	23.117	23.113	23.112	23.113	23.117 F	23.124	23.134	23.146

SPAN 59 — FINISHED GRADE ELEVATIONS AT POINTS

	INCR. DIST.	0	1	2	3	4	5	6	7 F	8	9	10
LF	9.192	18.649	18.649	18.649	18.649	18.649	18.649	18.649	18.649 F	18.649	18.649	18.649
LG	9.200	18.738	18.738	18.738	18.738	18.738	18.738	18.738	18.738 F	18.738	18.738	18.738
LMG	9.387	20.942	20.942	20.942	20.942	20.942	20.942	20.942	20.942 F	20.942	20.942	20.942
PG	9.392	21.000	21.000	21.000	21.000	21.000	21.000	21.000	21.000 F	21.000	21.000	21.000
RMG	9.397	21.058	21.058	21.058	21.058	21.058	21.058	21.058	21.058 F	21.058	21.058	21.058
RG	9.583	23.262	23.262	23.262	23.262	23.262	23.262	23.262	23.262 F	23.262	23.262	23.262
RF	9.591	23.351	23.351	23.351	23.351	23.351	23.351	23.351	23.351 F	23.351	23.351	23.351

SPAN 60 — FINISHED GRADE ELEVATIONS AT POINTS

	INCR. DIST.	0	1	2	3	4	5	6	7 F	8	9	10
GDR 1	9.209	18.854	18.842	18.833	18.826	18.822	18.821	18.822	18.826 F	18.833	18.842	18.854
GDR 2	9.254	19.390	19.379	19.369	19.363	19.359	19.358	19.359	19.363 F	19.369	19.379	19.390
GDR 3	9.300	19.927	19.915	19.906	19.899	19.895	19.894	19.895	19.899 F	19.906	19.915	19.927
GDR 4	9.345	20.463	20.452	20.442	20.436	20.432	20.430	20.432	20.436 F	20.442	20.452	20.463
GDR 5	9.391	21.000	20.988	20.979	20.972	20.968	20.967	20.968	20.972 F	20.979	20.988	21.000
GDR 6	9.436	21.537	21.524	21.515	21.508	21.504	21.503	21.504	21.508 F	21.515	21.524	21.537
GDR 7	9.482	22.073	22.061	22.051	22.045	22.041	22.039	22.041	22.045 F	22.051	22.061	22.073
GDR 8	9.527	22.609	22.597	22.588	22.581	22.577	22.576	22.577	22.581 F	22.588	22.597	22.610
GDR 9	9.573	23.146	23.134	23.124	23.117	23.113	23.112	23.113	23.117 F	23.124	23.134	23.146

SPAN 60 — FINISHED GRADE ELEVATIONS AT POINTS

	INCR. DIST.	0	1	2	3	4	5	6	7 F	8	9	10
LF	9.192	18.649	18.649	18.649	18.649	18.649	18.649	18.649	18.649 F	18.649	18.649	18.649
LG	9.200	18.738	18.738	18.738	18.738	18.738	18.738	18.738	18.738 F	18.738	18.738	18.738
LMG	9.387	20.942	20.942	20.942	20.942	20.942	20.942	20.942	20.942 F	20.942	20.942	20.942
PG	9.392	21.000	21.000	21.000	21.000	21.000	21.000	21.000	21.000 F	21.000	21.000	21.000
RMG	9.397	21.058	21.058	21.058	21.058	21.058	21.058	21.058	21.058 F	21.058	21.058	21.058
RG	9.583	23.262	23.262	23.262	23.262	23.262	23.262	23.262	23.262 F	23.262	23.262	23.262
RF	9.591	23.351	23.351	23.351	23.351	23.351	23.351	23.351	23.351 F	23.351	23.351	23.351

SPAN 61 — FINISHED GRADE ELEVATIONS AT POINTS

	INCR. DIST.	0	1	2	3	4	5	6	7 F	8	9	10
GDR 1	9.209	18.854	18.842	18.833	18.826	18.822	18.821	18.822	18.826 F	18.833	18.842	18.854
GDR 2	9.254	19.390	19.379	19.369	19.363	19.359	19.358	19.359	19.363 F	19.369	19.379	19.390
GDR 3	9.300	19.927	19.915	19.906	19.899	19.895	19.894	19.895	19.899 F	19.906	19.915	19.927
GDR 4	9.345	20.463	20.452	20.442	20.436	20.432	20.430	20.432	20.436 F	20.442	20.452	20.463
GDR 5	9.391	21.000	20.988	20.979	20.972	20.968	20.967	20.968	20.972 F	20.979	20.988	21.000
GDR 6	9.436	21.537	21.524	21.515	21.508	21.504	21.503	21.504	21.508 F	21.515	21.524	21.537
GDR 7	9.482	22.073	22.061	22.051	22.045	22.041	22.039	22.041	22.045 F	22.051	22.061	22.073
GDR 8	9.527	22.610	22.597	22.588	22.581	22.577	22.576	22.577	22.581 F	22.588	22.597	22.609
GDR 9	9.573	23.146	23.134	23.124	23.117	23.113	23.112	23.113	23.117 F	23.124	23.134	23.146

SPAN 61 — FINISHED GRADE ELEVATIONS AT POINTS

	INCR. DIST.	0	1	2	3	4	5	6	7 F	8	9	10
LF	9.192	18.649	18.649	18.649	18.649	18.649	18.649	18.649	18.649 F	18.649	18.649	18.649
LG	9.200	18.738	18.738	18.738	18.738	18.738	18.738	18.738	18.738 F	18.738	18.738	18.738
LMG	9.387	20.942	20.942	20.942	20.942	20.942	20.942	20.942	20.942 F	20.942	20.942	20.942
PG	9.392	21.000	21.000	21.000	21.000	21.000	21.000	21.000	21.000 F	21.000	21.000	21.000
RMG	9.397	21.058	21.058	21.058	21.058	21.058	21.058	21.058	21.058 F	21.058	21.058	21.058
RG	9.583	23.262	23.262	23.262	23.262	23.262	23.262	23.262	23.262 F	23.262	23.262	23.262
RF	9.591	23.351	23.351	23.351	23.351	23.351	23.351	23.351	23.351 F	23.351	23.351	23.351

SPAN 62 — FINISHED GRADE ELEVATIONS AT POINTS

	INCR. DIST.	0	1	2	3	4	5	6	7 F	8	9	10
GDR 1	9.209	18.854	18.842	18.833	18.826	18.822	18.821	18.822	18.826 F	18.833	18.842	18.840
GDR 2	9.254	19.390	19.379	19.369	19.363	19.359	19.358	19.359	19.363 F	19.369	19.379	19.376
GDR 3	9.300	19.927	19.915	19.906	19.899	19.895	19.894	19.895	19.899 F	19.906	19.915	19.913
GDR 4	9.345	20.463	20.452	20.442	20.436	20.432	20.430	20.432	20.436 F	20.442	20.452	20.449
GDR 5	9.391	21.000	20.988	20.979	20.972	20.968	20.967	20.968	20.972 F	20.979	20.988	20.986
GDR 6	9.436	21.536	21.524	21.515	21.508	21.504	21.503	21.504	21.508 F	21.515	21.524	21.522
GDR 7	9.482	22.073	22.061	22.051	22.045	22.041	22.039	22.041	22.045 F	22.051	22.061	22.059
GDR 8	9.527	22.609	22.597	22.588	22.581	22.577	22.576	22.577	22.581 F	22.588	22.597	22.595
GDR 9	9.573	23.146	23.134	23.124	23.117	23.113	23.112	23.113	23.117 F	23.124	23.134	23.132

SPAN 62 — FINISHED GRADE ELEVATIONS AT POINTS

	INCR. DIST.	0	1	2	3	4	5	6	7 F	8	9	10
LF	9.192	18.649	18.649	18.649	18.649	18.649	18.649	18.649	18.649 F	18.649	18.649	18.634
LG	9.200	18.738	18.738	18.738	18.738	18.738	18.738	18.738	18.738 F	18.738	18.738	18.724
LMG	9.387	20.942	20.942	20.942	20.942	20.942	20.942	20.942	20.942 F	20.942	20.942	20.928
PG	9.392	21.000	21.000	21.000	21.000	21.000	21.000	21.000	21.000 F	21.000	21.000	20.986
RMG	9.397	21.044	21.046	21.047	21.049	21.051	21.052	21.054 F	21.055	21.057	21.058	21.044
RG	9.583	23.248	23.262	23.262	23.262	23.262	23.262	23.262 F	23.262	23.262	23.262	23.248
RF	9.591	23.337	23.351	23.351	23.351	23.351	23.351	23.351 F	23.351	23.351	23.351	23.337

SPAN 63 — FINISHED GRADE ELEVATIONS AT POINTS

	INCR. DIST.	0	1	2	3	4	5	6	7 F	8	9	10
GDR 1	9.209	18.840	18.800	18.762	18.721	18.695	18.666	18.639	18.615 F	18.593	18.574	18.558
GDR 2	9.254	19.376	19.336	19.299	19.264	19.232	19.202	19.175	19.151 F	19.129	19.111	19.094
GDR 3	9.300	19.913	19.872	19.835	19.800	19.768	19.738	19.712	19.687 F	19.666	19.647	19.631
GDR 4	9.345	20.449	20.409	20.371	20.336	20.304	20.275	20.248	20.224 F	20.202	20.183	20.167
GDR 5	9.391	20.986	20.945	20.908	20.873	20.841	20.811	20.784	20.760 F	20.739	20.720	20.704
GDR 6	9.436	21.522	21.482	21.444	21.409	21.377	21.347	21.321	21.297 F	21.275	21.256	21.240
GDR 7	9.482	22.059	22.018	21.981	21.946	21.913	21.884	21.857	21.833 F	21.811	21.793	21.777
GDR 8	9.527	22.595	22.555	22.517	22.482	22.450	22.420	22.393	22.369 F	22.348	22.329	22.313
GDR 9	9.573	23.132	23.091	23.053	23.018	22.986	22.956	22.930	22.906 F	22.884	22.866	22.850

SPAN 63 — FINISHED GRADE ELEVATIONS AT POINTS

	INCR. DIST.	0	1	2	3	4	5	6	7 F	8	9	10
LF	9.192	18.634	18.606	18.578	18.550	18.521	18.493	18.465	18.437 F	18.409	18.381	18.352
LG	9.200	18.724	18.695	18.667	18.639	18.611	18.583	18.554	18.526 F	18.498	18.470	18.442
LMG	9.387	20.928	20.899	20.871	20.843	20.815	20.787	20.758	20.730 F	20.702	20.674	20.646
PG	9.392	20.986	20.957	20.929	20.901	20.873	20.845	20.816	20.788 F	20.760	20.732	20.704
RMG	9.397	21.044	21.015	20.987	20.959	20.931	20.903	20.874	20.846 F	20.818	20.790	20.762
RG	9.583	23.248	23.219	23.191	23.163	23.135	23.107	23.078	23.050 F	23.022	22.994	22.966
RF	9.591	23.337	23.309	23.281	23.252	23.224	23.196	23.168	23.140 F	23.112	23.083	23.055

HDR 6 MAY 96

FINLEY McNARY/JANSSEN SPAANS
a Joint Venture

Finley McNary Engineers, Inc.
1391 Timberlane Road Suite 200
Tallahassee, Florida 32312-1721

Janssen & Spaans Engineers, Inc.
2825 East 56th Street
Indianapolis, Indiana 46220

REVISIONS

DATE	BY	DESCRIPTION	DATE	BY	DESCRIPTION	DATE	BY	DESCRIPTION	DATE	BY	

	NAME	DATE
DR. BY	J.L.S.	1/96
CHK. BY	C.W.R.	1/96
SUPV.	H.D.R.	1/96

FINLEY McNARY/JANSSEN SPAANS

BOARD OF COUNTY COMMISSIONERS
LEE, COUNTY, FLORIDA
DEPARTMENT OF TRANSPORTATION

MIDPOINT BRIDGE
FINISH GRADE ELEVATIONS (13)

PROJECT NO.	SHEET NO.
5896	C-64

BX1-74

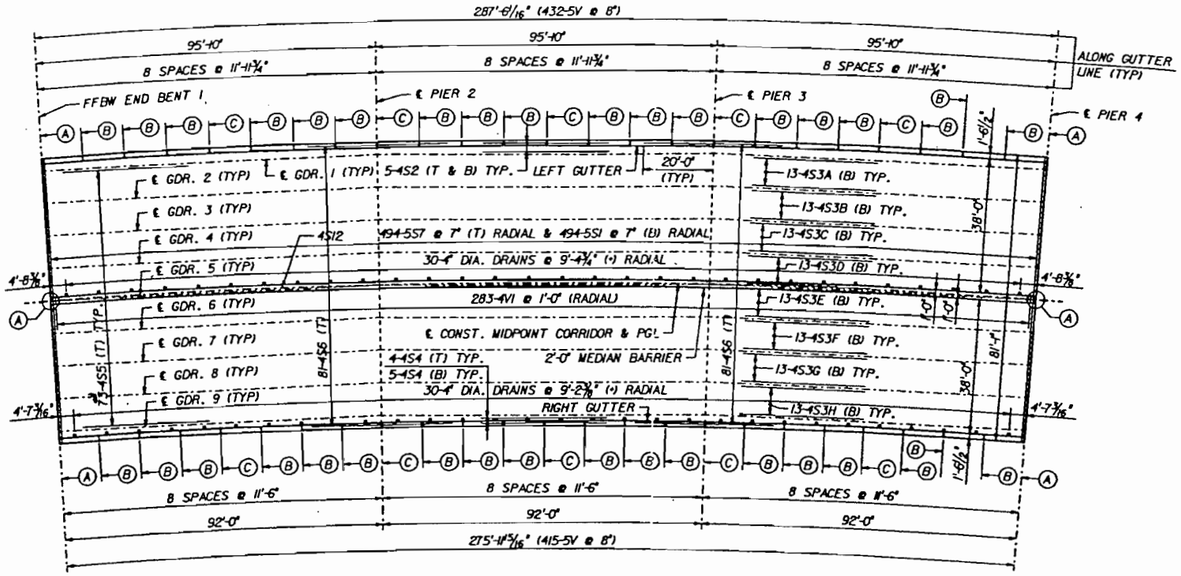

UNIT A - SPANS 1, 2 AND 3

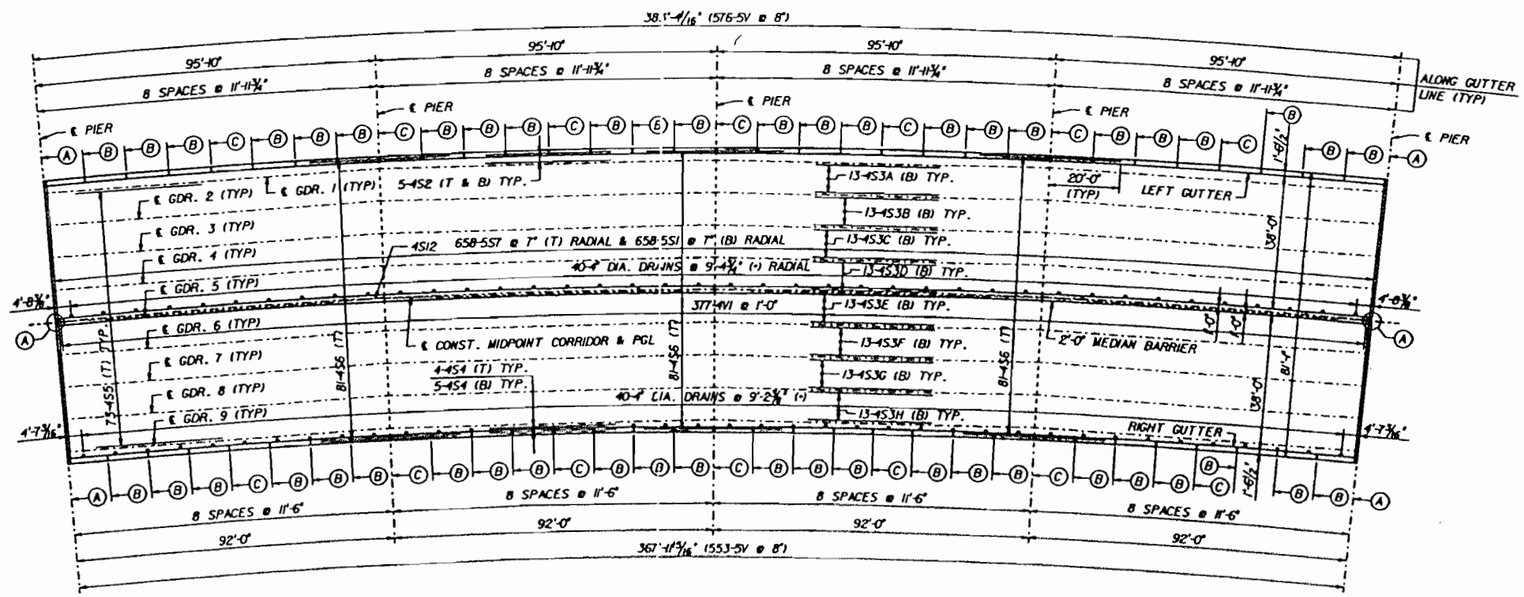

UNITS B AND C - SPANS 4 THRU 11

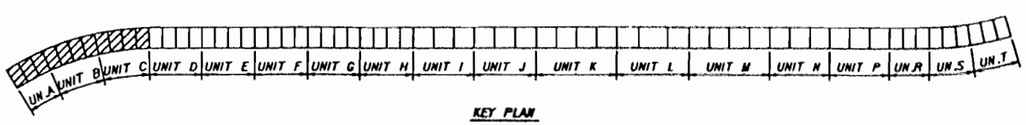

KEY PLAN

NOTES

1. FOR GENERAL NOTES, SEE SHEET C-1 & C-2.
2. LEGEND:
   - (A) EXPANSION JOINT. SEE DETAILS, SHEET C-104.
   - (B) ℄ 1/2" V-GROOVE IN BOTH FACES AND TOP OF BARRIER.
   - (C) ℄ 3/4" OPEN JOINT IN BARRIER.

   NOTE: JOINTS & GROOVES SHALL BE PLACED IN MEDIAN BARRIER AT LOCATIONS OPPOSITE THE JOINTS AND GROOVES IN THE TRAFFIC RAILING BARRIERS.
3. ALL REINFORCING STEEL SHALL HAVE 2" CLEAR COVER UNLESS NOTED OTHERWISE.
4. BAR 5V IS INCLUDED IN THE COST FOR TRAFFIC RAILING BARRIER.
5. BARS 4V1 AND 4S12 ARE INCLUDED IN THE COST OF THE MEDIAN BARRIER.
6. THE COST OF ALL LABOR AND MATERIALS REQUIRED FOR THE COMPLETION OF THE ELECTRICAL INSTALLATION WITHIN THE LIMITS SHOWN ON THE PLANS, INCLUDING ALL CONDUITS, EXPANSION COUPLINGS, JUNCTION BOXES, PULL BOXES AND MISCELLANEOUS HARDWARE SHALL BE CONSIDERED INCIDENTAL WORK AND INCLUDED IN THE CONTRACTORS BID PRICE FOR CLASS II CONCRETE (SUPERSTRUCTURE).
7. TRANSVERSE 5S1 BARS (RADIAL) SPACING IS MEASURED ALONG THE LEFT GUTTER LINE.
8. 4S2, 4S4 AND 4S6 BARS IN THE CANTILEVERED SLABS SHALL BE PLACED PARALLEL TO THE SLAB FASCIAS.
9. FOR DRAIN DETAILS, SEE SHEET C-107.

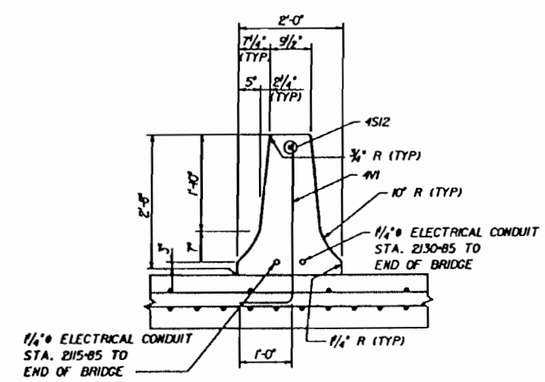

MEDIAN BARRIER SECTION

QUANTITIES PER LIN. FT.	
CONCRETE	0.019 CU. YD.
REINFORCING STEEL	3.34 LBS.

3/3/95

WORK THIS SHEET WITH SHEETS C-69 & C-70.

REVISIONS

DATE	BY	DESCRIPTION	DATE	BY	DESCRIPTION	DATE	BY	DESCRIPTION	DATE	BY	DESCRIPTION

	NAME	DATE
DR. BY	JBW	4/93
CHK. BY	REJ	2/94
SUPV.	REJ	7/93

Greiner Greiner, Inc. Engineers, Architects and Planners

BOARD OF COUNTY COMMISSIONERS
LEE COUNTY, FLORIDA
DEPARTMENT OF TRANSPORTATION

MIDPOINT BRIDGE
SUPERSTRUCTURE PLANS - SPANS 1 THRU 11

DISK#DRAW: C:\5\000.CADD.FG | BDECMP10.FGBJ

FALEECTY

PLOTTED: 27-JAN-95 09:27:10

PROJECT NO.	SHEET NO
5896	C-65

BX1-75

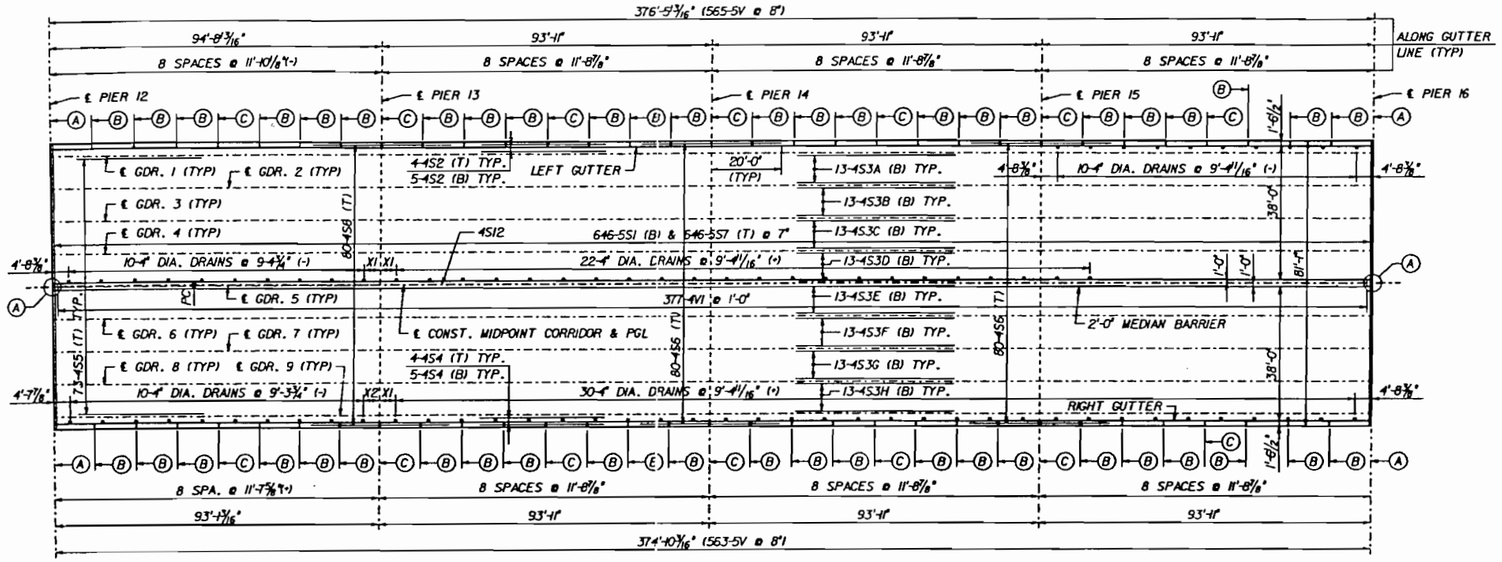

X1 - 4'-8 3/8"
X2 - 4'-7 1/8"

UNIT D - SPANS 12 THRU 15

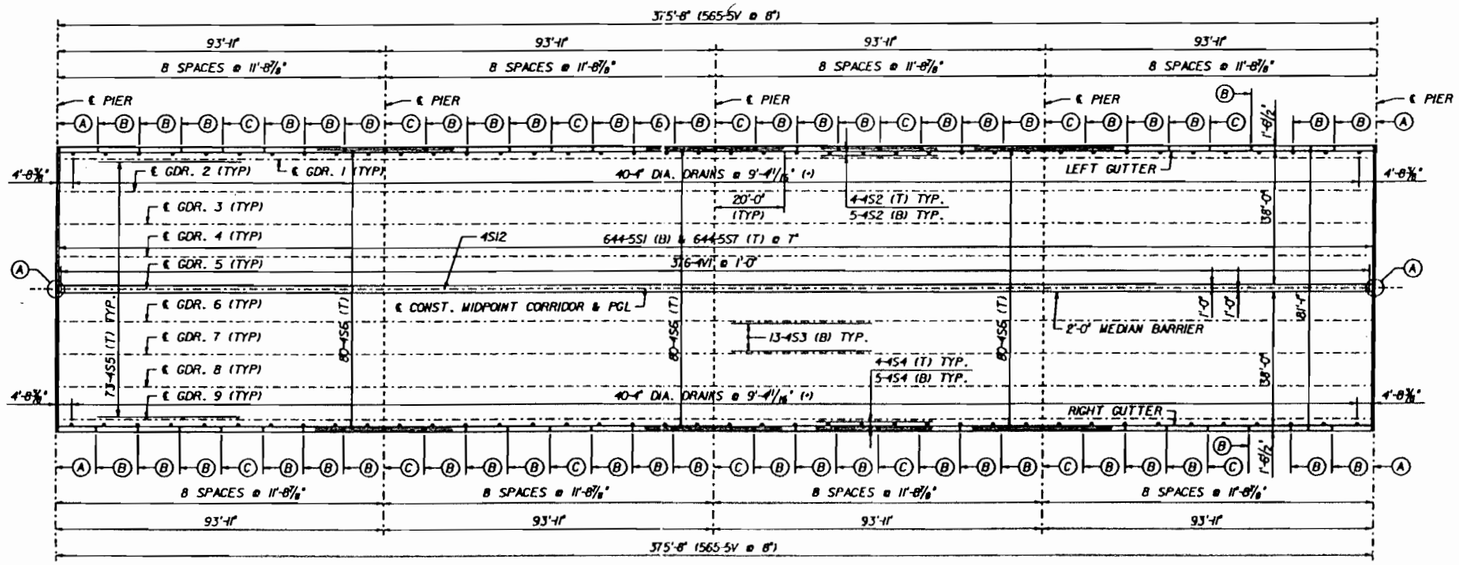

UNITS E THRU H - SPANS 16 THRU 31

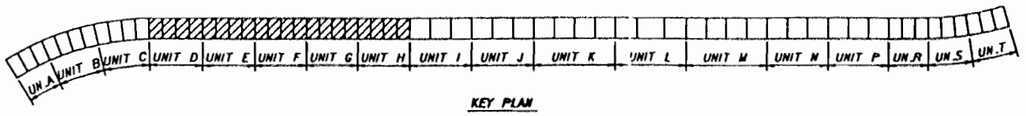

KEY PLAN

NOTES

1. FOR GENERAL NOTES, SEE SHEET C-1 & C-2.
2. LEGEND:
   - (A) EXPANSION JOINT. SEE DETAILS, SHEET C-104.
   - (B) ℄ 1/2" V-GROOVE IN BOTH FACES AND TOP OF BARRIER.
   - (C) ℄ 3/4" OPEN JOINT IN BARRIER.

     NOTE: JOINTS & GROOVES SHALL BE PLACED IN MEDIAN BARRIER AT LOCATIONS OPPOSITE THE JOINTS AND GROOVES IN THE TRAFFIC RAILING BARRIERS.
3. ALL REINFORCING STEEL SHALL HAVE 2" CLEAR COVER UNLESS NOTED OTHERWISE.
4. BAR 5V IS INCLUDED IN THE COST FOR TRAFFIC RAILING BARRIER.
5. BARS 4V1 AND 4S12 ARE INCLUDED IN THE COST OF THE MEDIAN BARRIER.
6. THE COST OF ALL LABOR AND MATERIALS REQUIRED FOR THE COMPLETION OF THE ELECTRICAL INSTALLATION WITHIN THE LIMITS SHOWN ON THE PLANS, INCLUDING ALL CONDUITS, EXPANSION COUPLINGS, JUNCTION BOXES, PULL BOXES AND MISCELLANEOUS HARDWARE SHALL BE CONSIDERED INCIDENTAL WORK AND INCLUDED IN THE CONTRACTORS BID PRICE FOR CLASS II CONCRETE (SUPERSTRUCTURE).
7. TRANSVERSE 5S1 BARS (RADIAL) SPACING IS MEASURED ALONG THE LEFT GUTTER LINE.
8. FOR DRAIN DETAILS, SEE SHEET C-107.

3/3/93

WORK THIS SHEET WITH SHEETS C-69 & C-70.

REVISIONS

DATE	BY	DESCRIPTION	DATE	BY	DESCRIPTION	DATE	BY	DESCRIPTION	DATE	BY	DESCRIPTION

	NAME	DATE
DR. BY	JBIII	4/93
CHK. BY	REJ	2/94
SUPV.	REJ	7/93

Greiner Engineering Design, Florida

Engineers, Architects and Planners

BOARD OF COUNTY COMMISSIONERS
LEE COUNTY, FLORIDA
DEPARTMENT OF TRANSPORTATION

MIDPOINT BRIDGE
SUPERSTRUCTURE PLANS-SPANS 12 THRU 31

DISK#DRAW: C26000.CADD.FG | BDECWPII.FGBJ

FALECCTY

PLOTTED: 27-JAN-95-09:31:00

PROJECT NO	SHEET NO
5896	C-66A

BX1-76

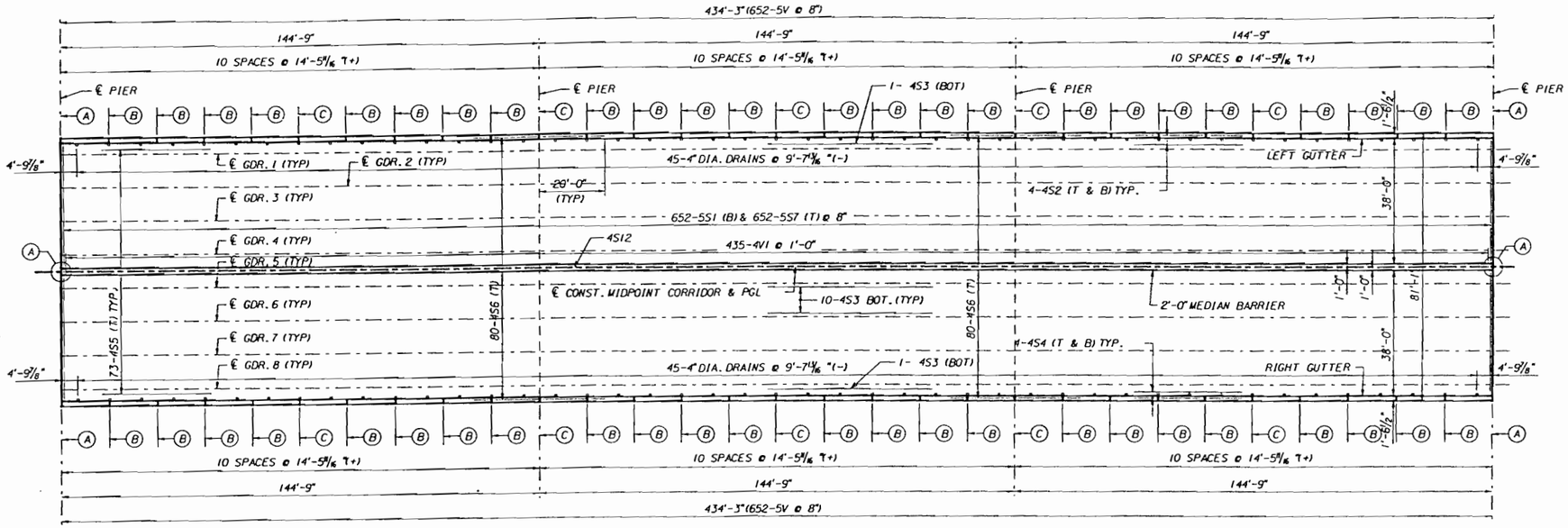

UNITS I, J, N AND P - SPANS 32 THRU 37 AND 49 THRU 54

NOTES

1. FOR GENERAL NOTES, SEE SHEET C-1A & C-2A.
2. LEGEND:
   - (A) EXPANSION JOINT. SEE DETAILS. SHEET C-104A & C-105A.
   - (B) ℄ 1/2" V-GROOVE IN BOTH FACES AND TOP OF BARRIER.
   - (C) ℄ 3/4" OPEN JOINT IN BARRIER.

   NOTE: JOINTS & GROOVES SHALL BE PLACED IN MEDIAN BARRIER AT LOCATIONS OPPOSITE THE JOINTS AND GROOVES IN THE TRAFFIC RAILING BARRIERS.
3. ALL REINFORCING STEEL SHALL HAVE 2" CLEAR COVER UNLESS NOTED OTHERWISE.
4. BAR 5V IS INCLUDED IN THE COST FOR TRAFFIC RAILING BARRIER.
5. BARS 4V1 AND 4S12 ARE INCLUDED IN THE COST OF THE MEDIAN BARRIER.
6. THE COST OF ALL LABOR AND MATERIALS REQUIRED FOR THE COMPLETION OF THE ELECTRICAL INSTALLATION WITHIN THE LIMITS SHOWN ON THE PLANS, INCLUDING ALL CONDUITS, EXPANSION COUPLINGS, JUNCTION BOXES, PULL BOXES AND MISCELLANEOUS HARDWARE SHALL BE CONSIDERED INCIDENTAL WORK AND INCLUDED IN THE CONTRACTORS BID PRICE FOR CLASS II CONCRETE (SUPERSTRUCTURE).
7. FOR DRAIN DETAILS, SEE SHEET C-107A.

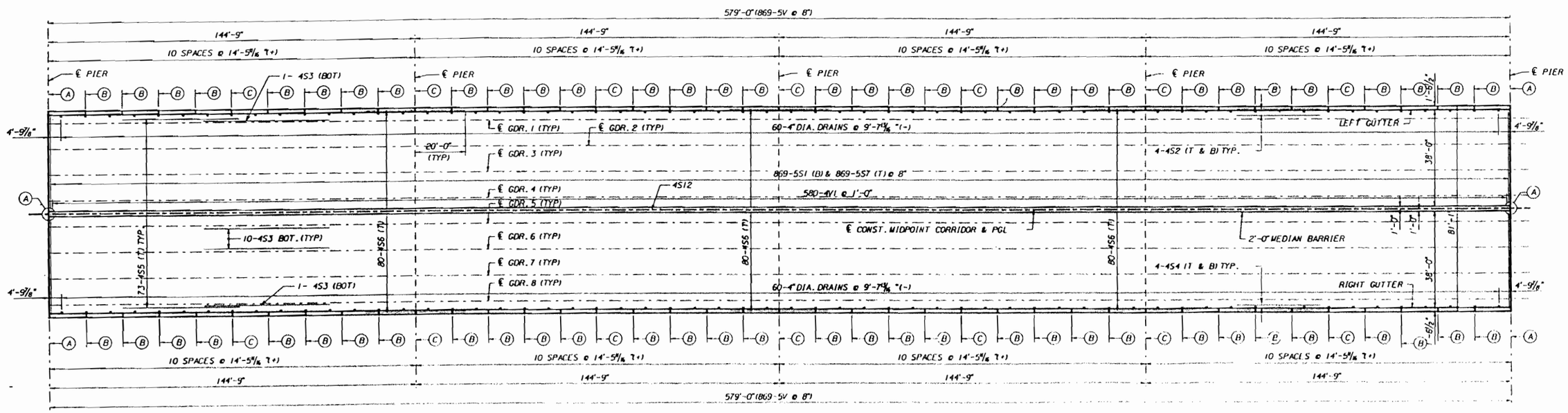

UNITS K AND M - SPANS 38 THRU 41 AND 45 THRU 48

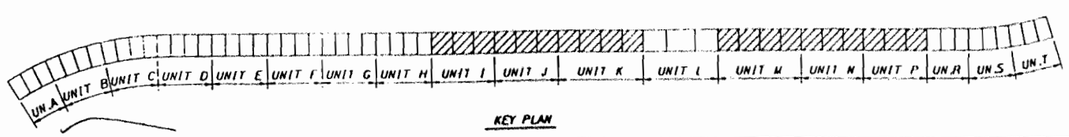

KEY PLAN

6 MAY 96

WORK THIS SHEET WITH SHEETS C-11A & C-13A.

FINLEY McNARY/JANSSEN SPAANS
a Joint Venture

Finley McNary Engineers, Inc
1391 Timberlane Road Suite 250
Tallahassee, Florida 32312-1721

Janssen & Spaans Engineers, Inc
2825 East 56th Street
Indianapolis, Indiana 46220

REVISIONS

DATE	BY	DESCRIPTION	DATE	BY	DESCRIPTION	DATE	BY	DESCRIPTION	DATE	BY	

	NAME	DATE
DR. BY	J.L.S.	1/96
CHK. BY	C.W.N.	1/96
SUPV.	H.D.R.	1/96

FINLEY McNARY/JANSSEN SPAANS

BOARD OF COUNTY COMMISSIONERS
LEE, COUNTY, FLORIDA
DEPARTMENT OF TRANSPORTATION

MIDPOINT BRIDGE
SUPERSTRUCTURE PLANS-SPANS
32 THRU 41 AND 45 THRU 54

PROJECT NO.	SHEET NO.
5896	C-67A

BX1-77

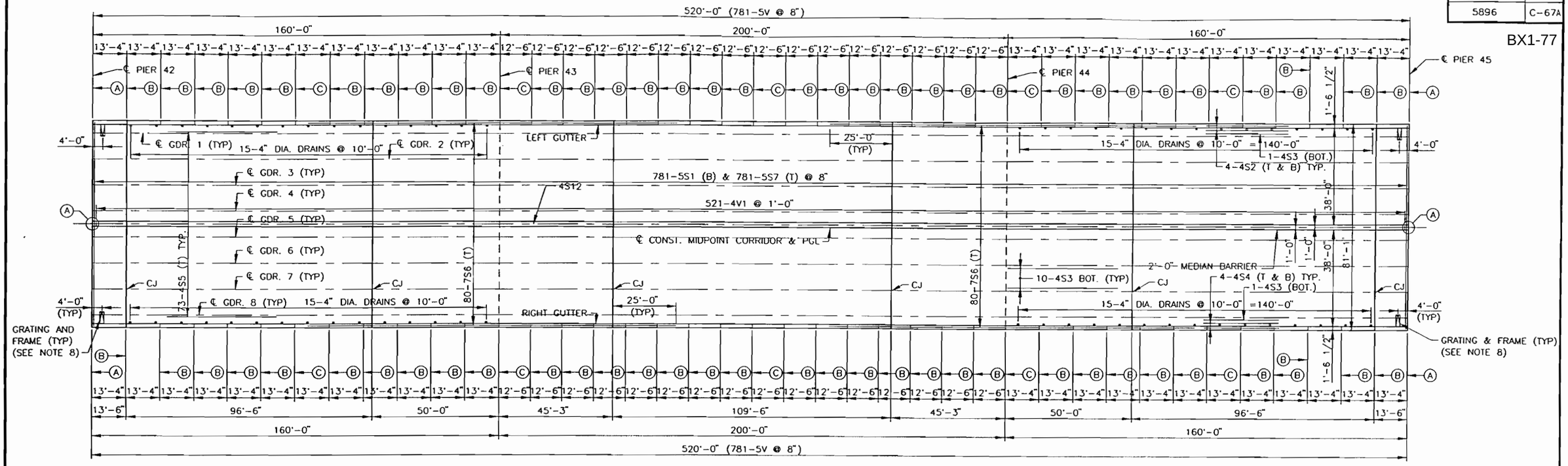

UNIT L – SPANS 42, 43 AND 44

NOTE: SHIFT LOCATION OF 4" DIAMETER DRAINS AT CONSTRUCTION JOINTS AS NEEDED

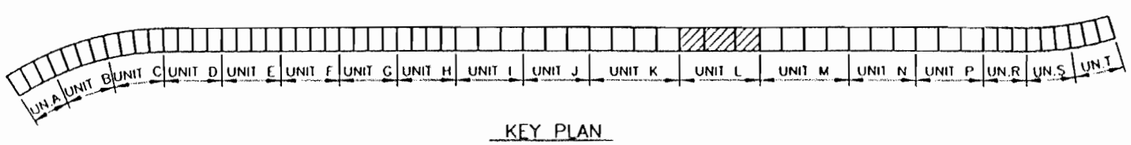

KEY PLAN

NOTES

1. FOR GENERAL NOTES, SEE SHEET C-1A & C-2A.
2. LEGEND:
   - Ⓐ EXPANSION JOINT. SEE DETAILS, SHEET C-104A & C-105A.
   - Ⓑ ℄ 1/2" V-GROOVE IN BOTH FACES AND TOP OF BARRIER.
   - Ⓒ ℄ 3/4" OPEN JOINT IN BARRIER.
3. JOINTS AND GROOVES SHALL BE PLACED IN MEDIAN BARRIER AT LOCATIONS OPPOSITE THE JOINTS AND GROOVES IN THE TRAFFIC RAILING BARRIER.
4. ALL REINFORCING STEEL SHALL HAVE 2" CLEAR COVER UNLESS NOTED OTHERWISE.
5. BAR 5V IS INCLUDED IN THE COST FOR TRAFFIC RAILING BARRIER.
6. BARS 4V1 AND 4S12 ARE INCLUDED IN THE COST OF THE MEDIAN BARRIER.
7. THE COST OF ALL LABOR AND MATERIALS REQUIRED FOR THE COMPLETION OF THE ELECTRICAL INSTALLATION WITHIN THE LIMITS SHOWN ON THE PLANS, INCLUDING ALL CONDUITS, EXPANSION COUPLINGS, JUNCTION BOXES, PULL BOXES AND MISCELLANEOUS HARDWARE SHALL BE CONSIDERED INCIDENTAL WORK AND INCLUDED IN THE CONTRACTORS BID PRICE FOR CLASS II CONCRETE (SUPERSTRUCTURE).
8. FOR DRAINAGE DETAILS, SEE SHEETS C-107A & C-108A

Michael J. Halter
5/3/96

WORK THIS SHEET WITH SHEETS C-72A & C-73A2.

FINLEY McNARY/JANSSEN SPAANS
a Joint Venture

Finley McNary Engineers, Inc.
1391 Timberlane Road Suite 200
Tallahassee, Florida 32312-1721

Janssen & Spaans Engineers, Inc.
2825 East 56th Street
Indianapolis, Indiana 46220

REVISIONS

DATE	BY	DESCRIPTION	DATE	BY	DESCRIPTION	DATE	BY	DESCRIPTION	DATE	BY

	NAME	DATE
DR BY	TAL	1/96
CHK BY	MJH	1/96

FINLEY McNARY/JANSSEN SPAANS

BOARD OF COUNTY COMMISSIONERS
LEE, COUNTY, FLORIDA
DEPARTMENT OF TRANSPORTATION

MIDPOINT BRIDGE
SUPERSTRUCTURE PLANS
SPANS 42, 43 & 44

PROJECT NO.	SHEET NO.
5896	C-68

BX1-78

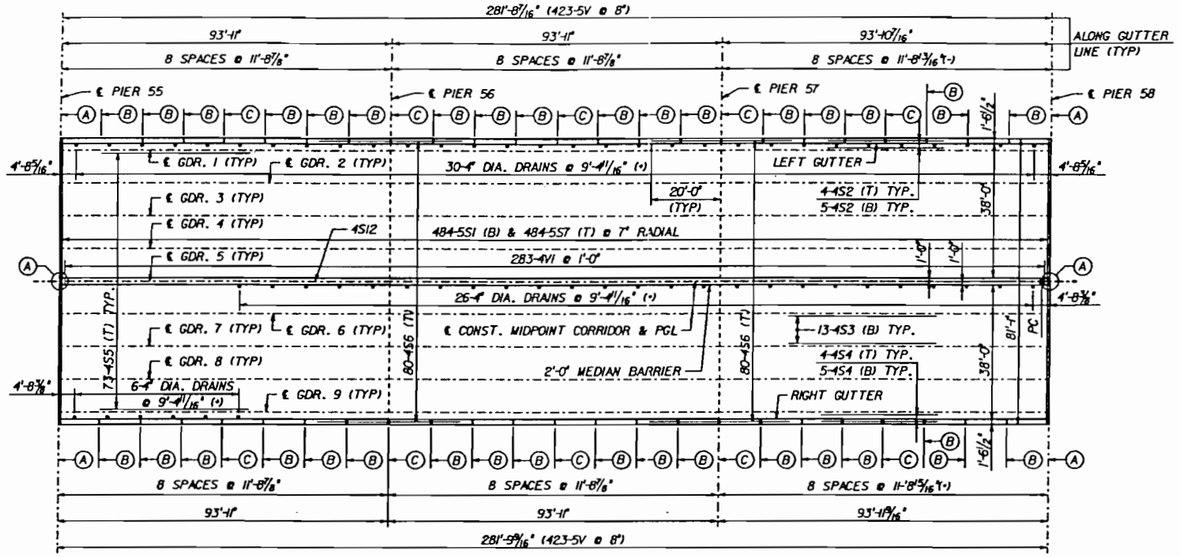

UNIT R - SPANS 55 THRU 57

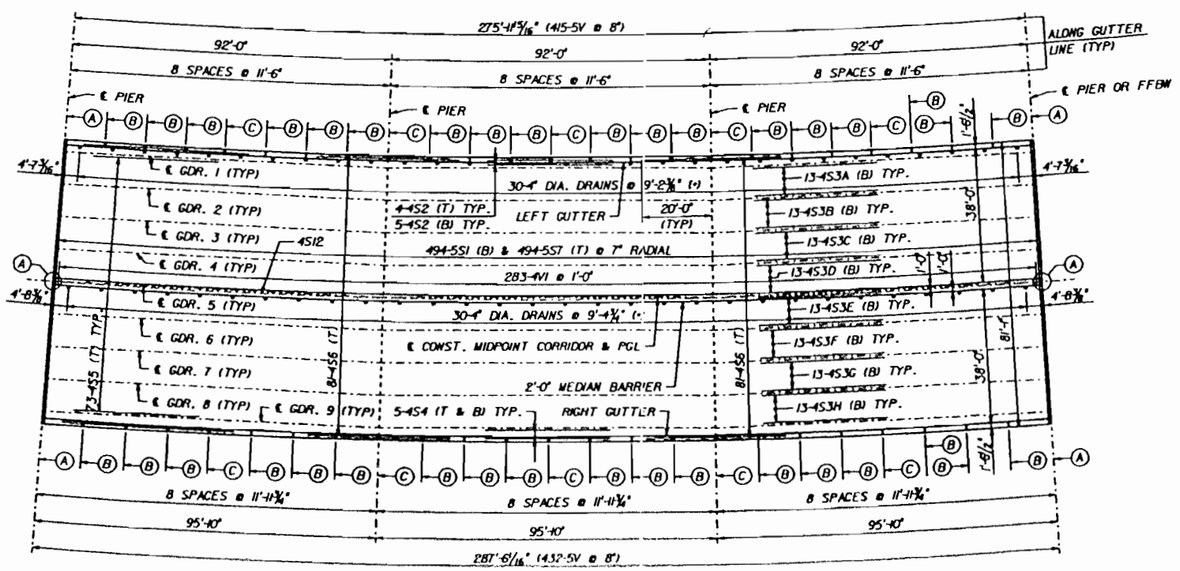

UNITS S AND T - SPANS 58 THRU 63

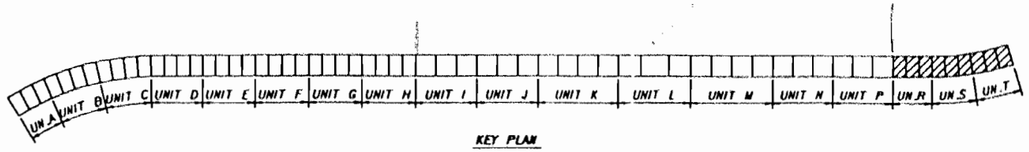

KEY PLAN

NOTES

1. FOR GENERAL NOTES, SEE SHEET C-1 & C-2.
2. LEGEND:
   - (A) EXPANSION JOINT. SEE DETAILS, SHEET C-104.
   - (B) ℄ 1/2" V-GROOVE IN BOTH FACES AND TOP OF BARRIER.
   - (C) ℄ 3/4" OPEN JOINT IN BARRIER.

   NOTE: JOINTS & GROOVES SHALL BE PLACED IN MEDIAN BARRIER AT LOCATIONS OPPOSITE THE JOINTS AND GROOVES IN THE TRAFFIC RAILING BARRIERS.
3. ALL REINFORCING STEEL SHALL HAVE 2" CLEAR COVER UNLESS NOTED OTHERWISE.
4. BAR 5V IS INCLUDED IN THE COST FOR TRAFFIC RAILING BARRIER.
5. BARS 4V1 AND 4S12 ARE INCLUDED IN THE COST OF THE MEDIAN BARRIER.
6. THE COST OF ALL LABOR AND MATERIALS REQUIRED FOR THE COMPLETION OF THE ELECTRICAL INSTALLATION WITHIN THE LIMITS SHOWN ON THE PLANS, INCLUDING ALL CONDUITS, EXPANSION COUPLINGS, JUNCTION BOXES, PULL BOXES AND MISCELLANEOUS HARDWARE SHALL BE CONSIDERED INCIDENTAL WORK AND INCLUDED IN THE CONTRACTORS BID PRICE FOR CLASS II CONCRETE (SUPERSTRUCTURE).
7. TRANSVERSE 5S1 BARS (RADIAL) SPACING IS MEASURED ALONG THE RIGHT GUTTER LINE.
8. 4S2, 4S4 AND 4S6 BARS IN THE CANTILEVERED SLABS SHALL BE PLACED PARALLEL TO THE SLAB FASCIAS.
9. FOR DRAIN DETAILS, SEE SHEET C-107.

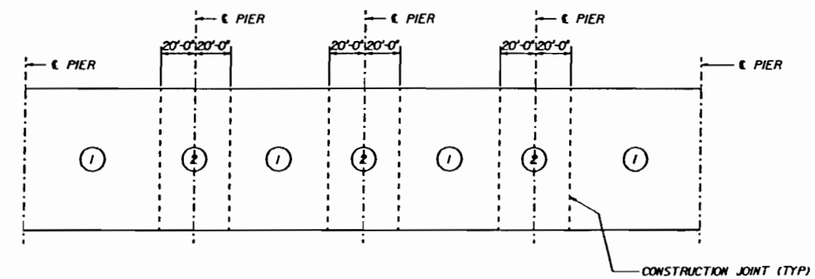

DECK POURING SEQUENCE
UNITS B, C, D, E, F, G, H

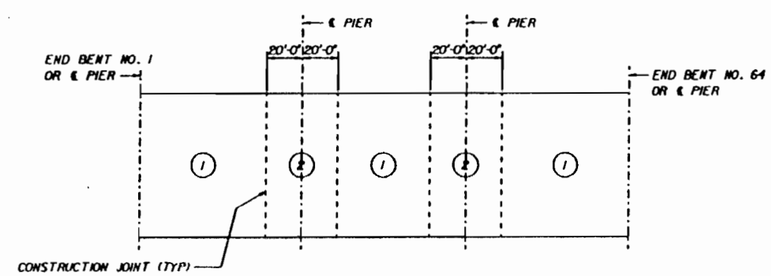

DECK POURING SEQUENCE
UNITS A, R, S, T

POURING SEQUENCE NOTES

1. POURS WITH THE SAME NUMERICAL DESIGNATION MAY BE POURED SIMULTANEOUSLY.
2. NO POUR SHALL BE MADE ADJACENT TO A PREVIOUS POUR THAT IS NOT A MINIMUM OF 72 HOURS OLD.

3/3/95

WORK THIS SHEET WITH SHEETS C-69 & C-70.

REVISIONS

DATE	BY	DESCRIPTION	DATE	BY	DESCRIPTION	DATE	BY	DESCRIPTION	DATE	BY	DESCRIPTION

	NAME	DATE
DR. BY	JBW	4/93
CHK. BY	REJ	2/94

Greiner Engineering

Engineers, Architects and Planners

BOARD OF COUNTY COMMISSIONERS
LEE COUNTY, FLORIDA
DEPARTMENT OF TRANSPORTATION

MIDPOINT BRIDGE
SUPERSTRUCTURE PLANS
SPANS 55 THRU 63

DISK#DRAW: C:\256000.GADD.FG\BOECWP12.FGB\

FRLEECTY

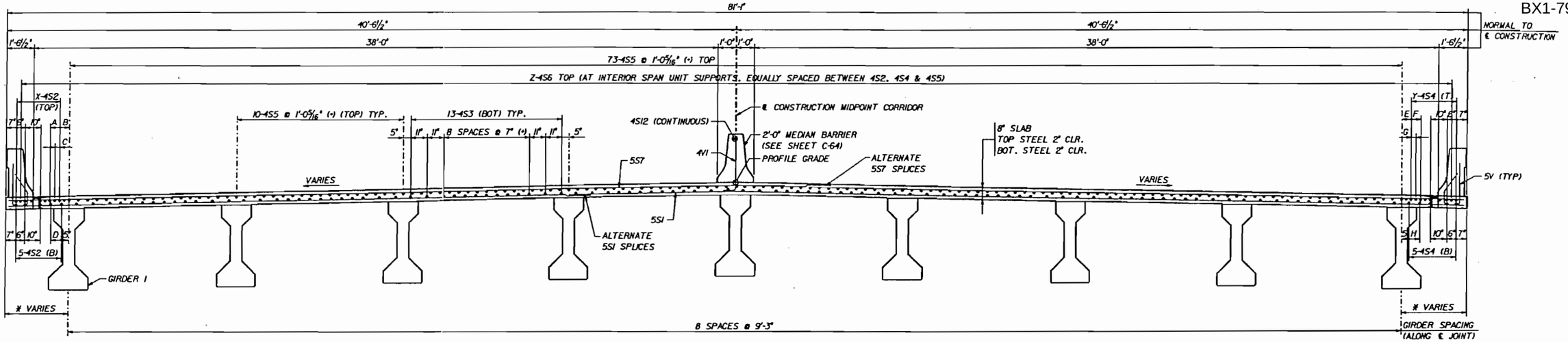

SECTION AT MID SPAN

BARS 4S2, 4S4, 4S5 AND 4S6											
SPAN NO.	DIM. A	DIM. B	DIM. C	DIM. D	DIM. E	DIM. F	DIM. G	DIM. H	X	Y	Z
1 THRU 11	9"	9"	4½"	11"	10"	0"	0"	7"	5	4	81
12	0"	11"	0"	9"	10"	0"	0"	7"	4	4	80
13 THRU 31 & 55 THRU 57	0"	10"	0"	7"	10"	0"	0"	7"	4	4	80
58 THRU 63	0"	10"	0"	7"	9"	9"	4½"	11"	4	5	81

* 3'-6½" (RADIAL) AT ENDS OF SPAN

NOTE: MINIMUM LAP SPLICE FOR NUMBER 4 BARS - 1'-8"
MINIMUM LAP SPLICE FOR NUMBER 5 BARS - 2'-2"
MINIMUM LAP SPLICE FOR NUMBER 7 BARS - 3'-6"

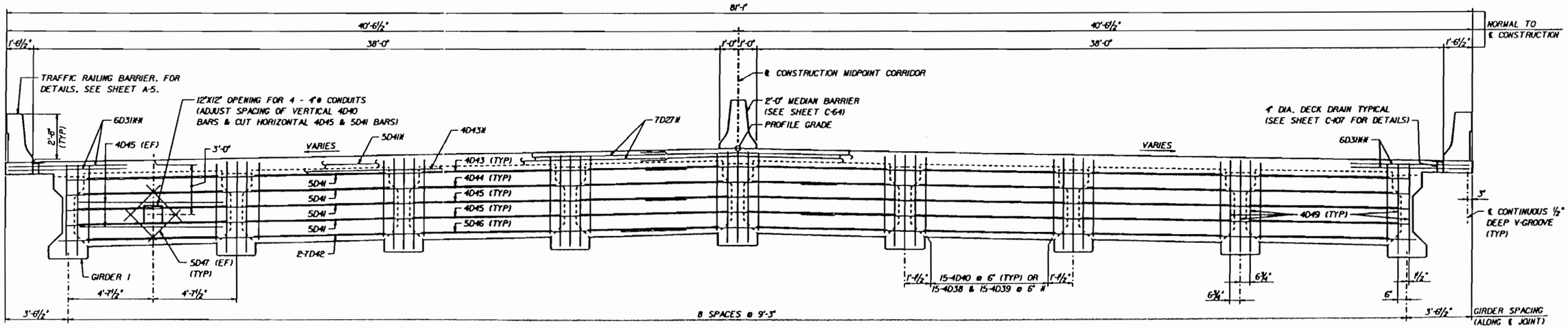

SECTION AT END DIAPHRAGM

* REQUIRED AT PIERS 32 AND 55 ONLY
** NOT REQUIRED AT PIERS 32 AND 55.

K Jarrett 3/3/95

WORK THIS SHEET WITH SHEETS C-64, C-65, C-68, C-70 & C-73.

REVISIONS											
DATE	BY	DESCRIPTION	DATE	BY	DESCRIPTION	DATE	BY	DESCRIPTION	DATE	BY	DESCRIPTION

	NAME	DATE
DR. BY	JBIII	5/93
CHK. BY	REJ	7/94
SUPV.	REJ	7/94

Greiner Greiner, Inc. Tampa, Florida

Engineers, Architects and Planners

BOARD OF COUNTY COMMISSIONERS
LEE COUNTY, FLORIDA
DEPARTMENT OF TRANSPORTATION

MIDPOINT BRIDGE
SUPERSTRUCTURE SECTIONS
SPANS 1 THRU 31 AND 55 THRU 63

DISK$DRAW: [C25/000.EADD.FG] BDECWP15.FGB]
FRLEECTY

PROJECT NO.	SHEET NO.
5896	C-70

BX1-80

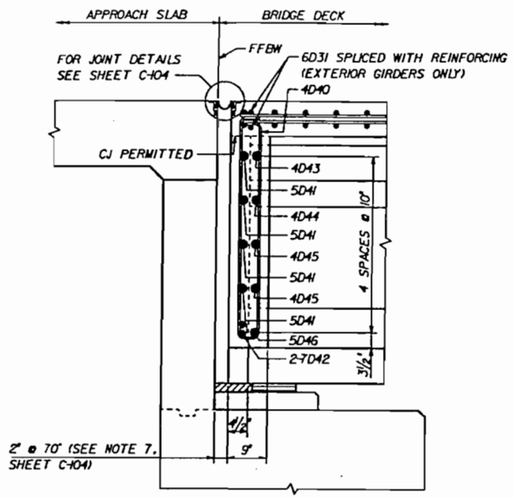

SECTION AT END BENTS 1 AND 64

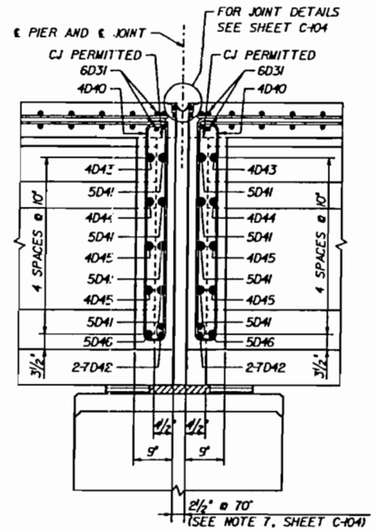

SECTION AT PIERS 4,8,12,16,20,24,28,58 AND 61

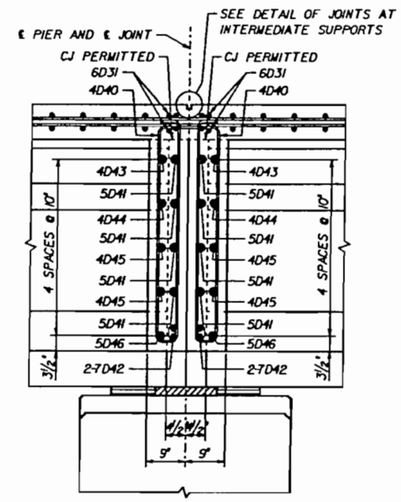

SECTION AT PIERS 2,3,5,6,7,9,10,11,13,14,15,17,18,19, 21,22,23,25,26,27,29,30,31,56,57,59,60,62 AND 63

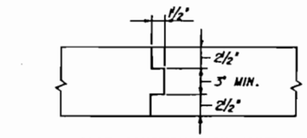

SLAB CONSTRUCTION JOINT

TO BE USED WHERE NO GIRDER OR DIAPHRAGM OCCURS BELOW THE JOINT. REINFORCING STEEL SHALL BE CONTINUOUS THRU CONSTRUCTION JOINTS.

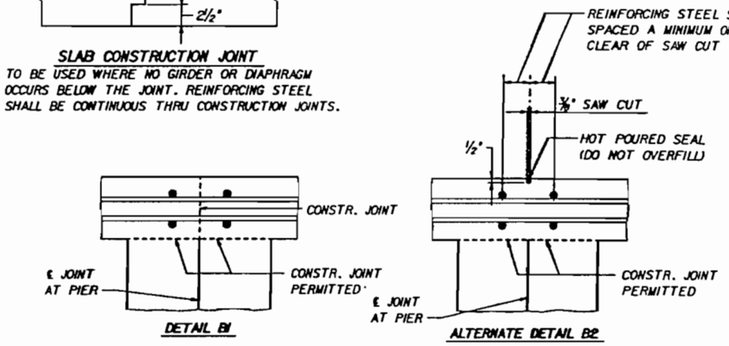

DETAIL OF JOINTS AT INTERMEDIATE SUPPORTS

NOTE: DETAIL "B1" SHALL APPLY WHERE A PLACEMENT TERMINATES AT AN INTERMEDIATE SUPPORT. AT THE OPTION OF THE CONTRACTOR, ALTERNATE DETAIL "B2" MAY BE USED. WHEN SLAB PLACEMENTS ARE CONTINUOUS OVER INTERMEDIATE SUPPORTS. THE COST OF CONSTRUCTING ALTERNATE DETAIL "B2" AT INTERMEDIATE SUPPORTS SHALL BE AT THE CONTRACTOR'S EXPENSE. ON JOINTS WHERE SAW CUTS ARE MADE, THE SAW CUT SHALL BE MADE NO LATER THAN THE DAY FOLLOWING CONCRETE PLACEMENT.

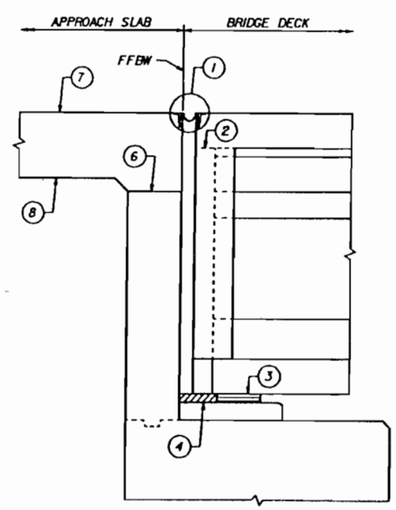

SECTION AT END BENTS 1 AND 64

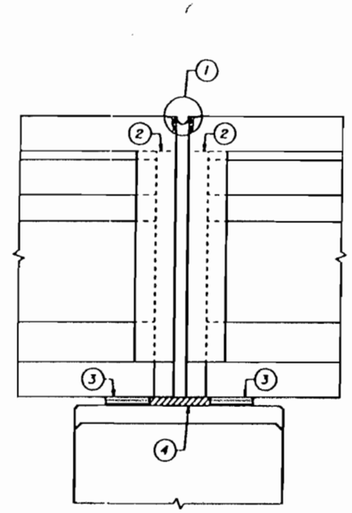

SECTION AT PIERS 4,8,12,16,20,24,28,58 AND 61

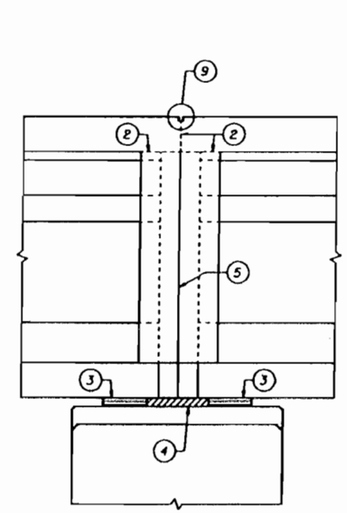

SECTION AT PIERS 2,3,5,6,7,9,10,11,13,14,15,17,18,19, 21,22,23,25,26,27,29,30,31,56,57,59,60,62 AND 63

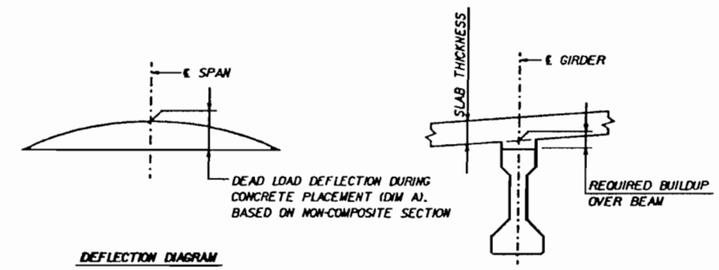

DEFLECTION DIAGRAM

BUILDUP OVER BEAM

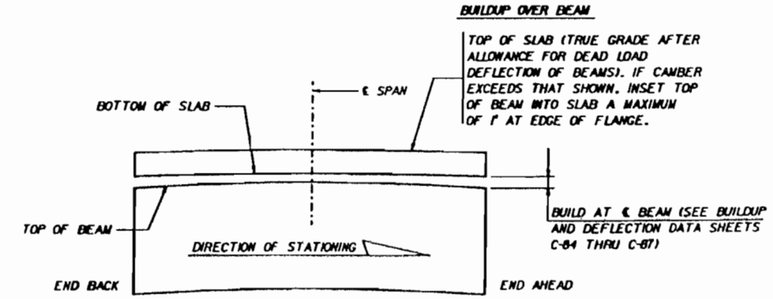

RELATIONSHIP OF PRESTRESSED BEAM AND SLAB

DEFLECTION AND BUILDUP DETAILS

NOTE: FOR SUPERSTRUCTURE QUANTITIES SEE SHEET C-74A

3/13/95

WORK THIS SHEET WITH C-64, C-65, C-68 & C-69.

LIST OF STANDARD NOTATIONS

1. DECK EXPANSION JOINTS AS REQUIRED. SEE SHEET C-104.
2. CONSTRUCTION JOINT PERMITTED.
3. COMPOSITE NEOPRENE BEARING PAD.
4. PREMOULDED EXPANSION JOINT MATERIAL.
5. ONE LAYER 55# SMOOTH ROOFING PAPER.
6. TWO LAYERS 55# SMOOTH ROOFING PAPER.
7. SEE "SURFACE TREATMENT NOTE" ON APPROACH SLAB DRAWINGS.
8. APPROACH SLAB.
9. SEE DETAIL OF JOINTS AT INTERMEDIATE SUPPORTS.

REVISIONS

DATE	BY	DESCRIPTION	DATE	BY	DESCRIPTION	DATE	BY	DESCRIPTION	DATE	BY	DESCRIPTION

	NAME	DATE
DR. BY	JBIII	3/94
CHK. BY	REJ	7/94
SUPV.	REJ	7/94

Greiner Engineering, Inc. Tampa, Florida

Engineers, Architects and Planners

BOARD OF COUNTY COMMISSIONERS
LEE COUNTY, FLORIDA
DEPARTMENT OF TRANSPORTATION

MIDPOINT BRIDGE
MISCELLANEOUS SUPERSTRUCTURE DETAILS
SPANS 1 THRU 31 AND 55 THRU 63

FILECITY

#!#DIAT: C:\26\000\CADD\FG\BDECMP24.FGBJ

PROJECT NO.	SHEET NO.
5896	C-71A

BX1-81

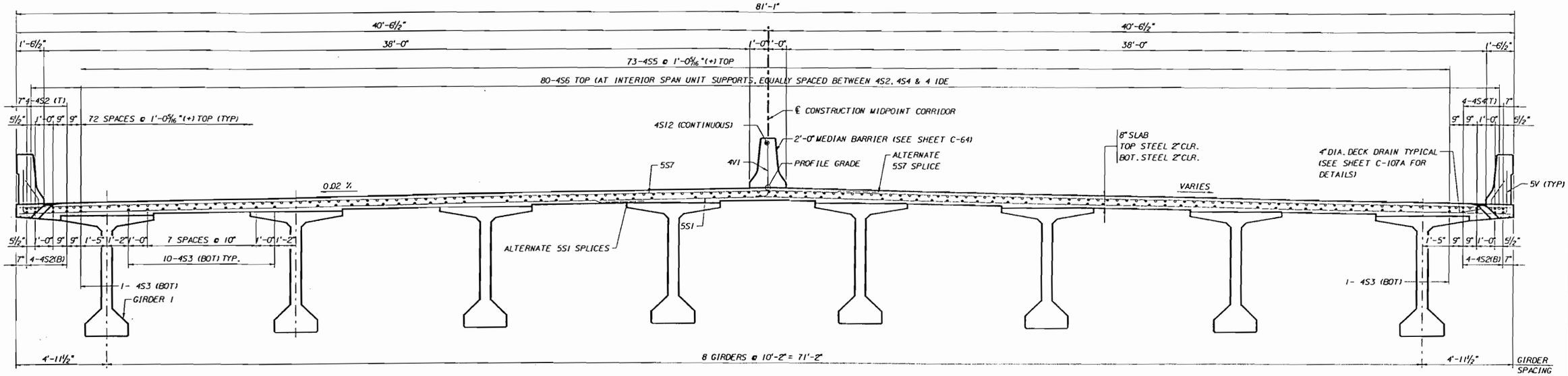

NOTE: MINIMUM LAP SPLICE FOR NUMBER 4 BARS = 1'-8"
MINIMUM LAP SPLICE FOR NUMBER 5 BARS = 2'-2"
MINIMUM LAP SPLICE FOR NUMBER 6 BARS = 2'-7"
MINIMUM LAP SPLICE FOR NUMBER 8 BARS = 3'-6"

SECTION AT MID SPAN

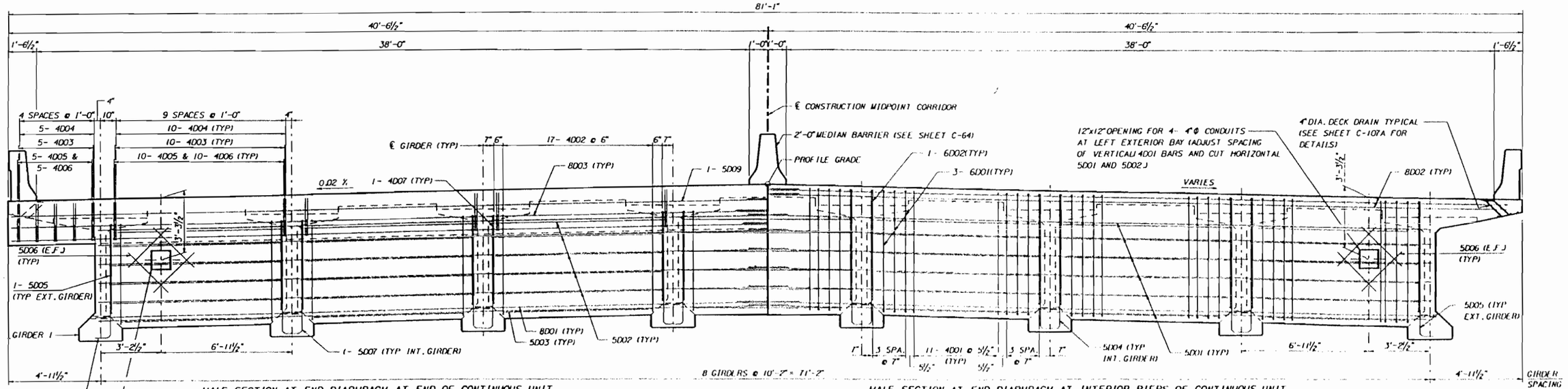

HALF SECTION AT END DIAPHRAGM AT END OF CONTINUOUS UNIT
(PIERS 42 & 45)

HALF SECTION AT END DIAPHRAGM AT INTERIOR PIERS OF CONTINUOUS UNIT
(PIERS 32 THRU 41 AND 46 THRU 55)

12"x12" OPENING FOR 4- 4Φ CONDUITS (ADJUST SPACING OF VERTICAL 4002 BARS AND CUT HORIZONTAL 5001 AND 5002)
1- 5008 (TYP EXT. GIRDER)

6 MAY 96

WORK THIS SHEET WITH SHEETS C-66A & C-73A.

FINLEY McNARY/JANSSEN SPAANS
a Joint Venture

Finley McNary Engineers, Inc.
1301 Timberlane Road Suite 200
Tallahassee, Florida 32312-1721

Janssen & Spaans Engineers, Inc.
2825 East 56th Street
Indianapolis, Indiana 46220

REVISIONS											
DATE	BY	DESCRIPTION	DATE	BY	DESCRIPTION	DATE	BY	DESCRIPTION	DATE	BY	

	NAME	DATE
DR. BY	J.J.S.	1/96
CHK. BY	C.W.H.	1/96
SUPV.	H.D.H.	1/96

FINLEY McNARY/JANSSEN SPAANS

BOARD OF COUNTY COMMISSIONERS
LEE COUNTY, FLORIDA
DEPARTMENT OF TRANSPORTATION

MIDPOINT BRIDGE
SUPERSTRUCTURE SECTIONS
SPANS 32 THRU 41 AND 45 THRU 54

PROJECT NO.	SHEET NO
5896	C-72A

BX1-82

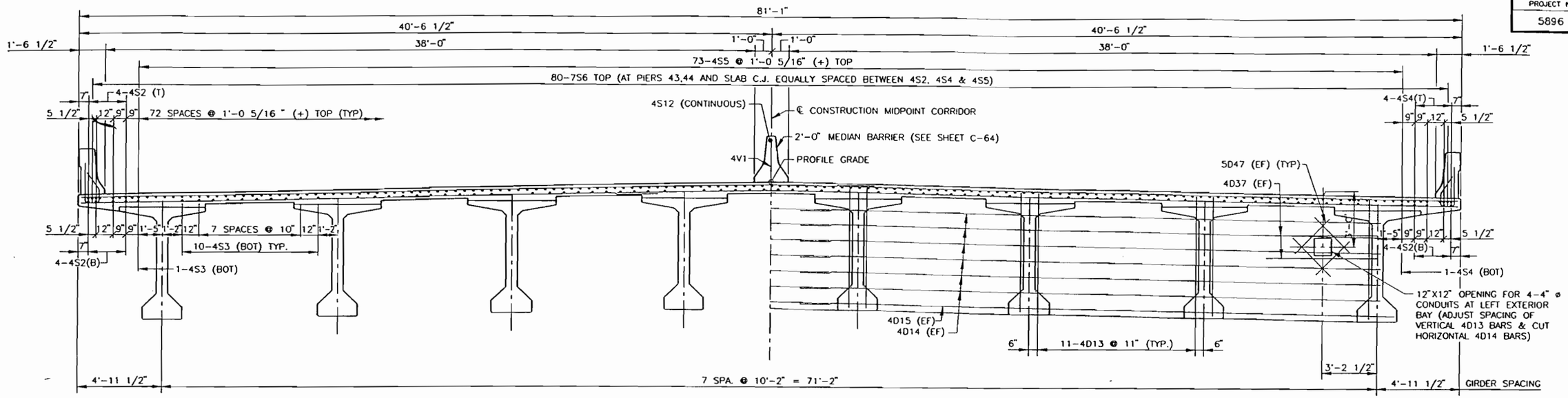

HALF SECTION AT MID SPAN

HALF SECTION AT INTERMEDIATE DIAPHRAGM (CLOSURE POUR) - SPANS 42,43 AND 44

MINIMUM LAP SPLICE FOR #4 BARS 1'-8"
MINIMUM LAP SPLICE FOR #5 BARS 2'-2"
MINIMUM LAP SPLICE FOR #7 BARS 3'-6"

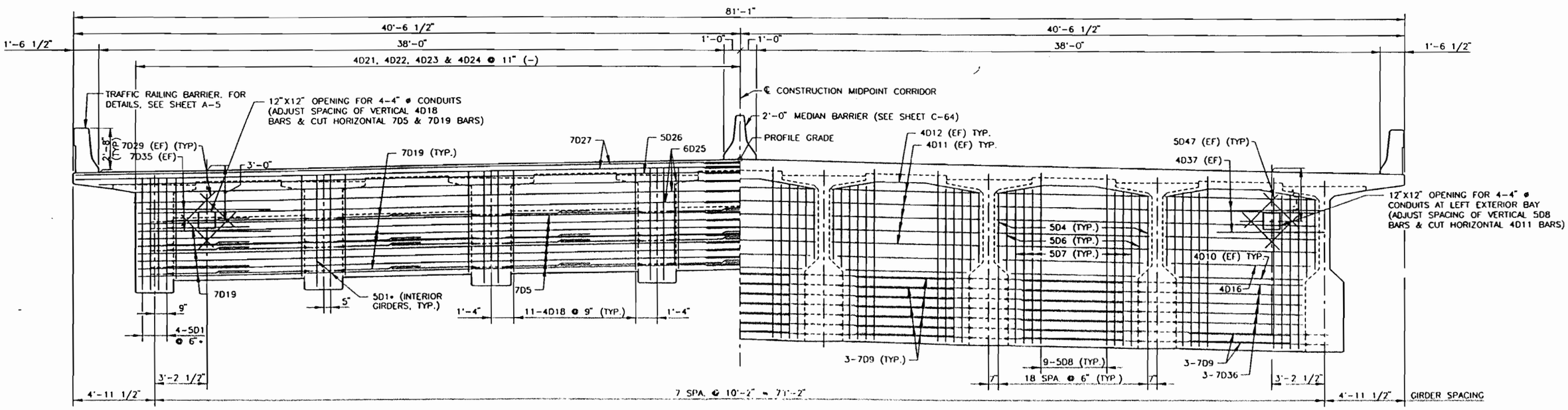

HALF SECTION AT END DIAPHRAGM - PIERS 42 AND 45

* ADJUST BAR SPACING OF 4D22 AND CUT 5D1 TO PROVIDE 2" CLEARANCE TO EXP. JOINT SUPPORT BOXES.

HALF SECTION AT END DIAPHRAGM - PIERS 43 AND 44

Michael J. Holtzer
5/13/96

FINLEY McNARY/JANSSEN SPAANS
a Joint Venture

Finley McNary Engineers, Inc
1391 Timberlane Road Suite 200
Tallahassee, Florida 32312-1721

Janssen & Spaans Engineers, Inc.
2825 East 56th Street
Indianapolis, Indiana 46220

REVISIONS

DATE	BY	DESCRIPTION	DATE	BY	DESCRIPTION	DATE	BY	DESCRIPTION	DATE	BY

	NAME	DATE
DR. BY	TAL	1/96
CHK. BY	MJH	1/96

FINLEY McNARY/JANSSEN SPAANS

BOARD OF COUNTY COMMISSIONERS
LEE, COUNTY, FLORIDA

MIDPOINT BRIDGE
SUPERSTRUCTURE SECTIONS

PROJECT NO.	SHEET NO.
5896	C-73A

BX1-83

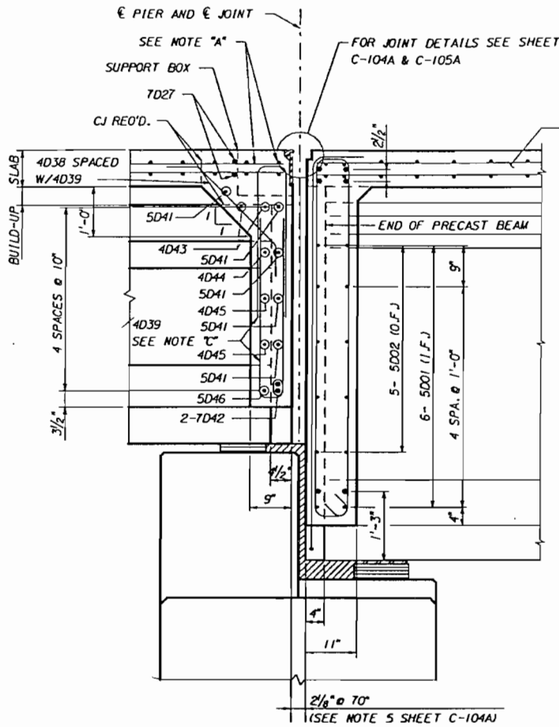

SECTION AT PIERS 32 AND 55

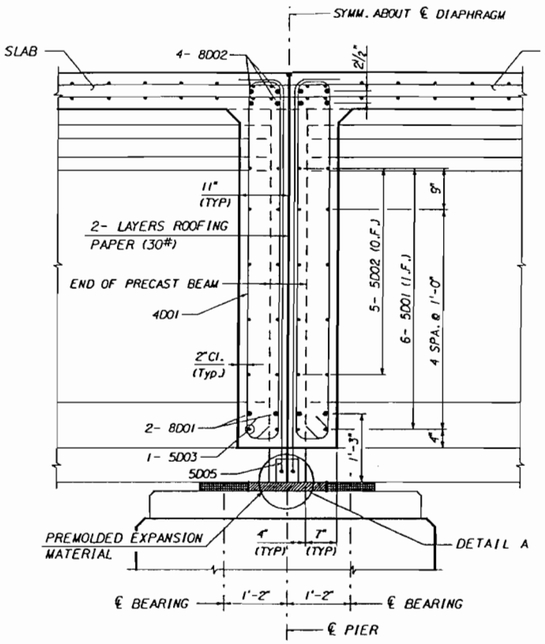

SECTION AT PIERS 33, 34, 36, 37, 39, 40, 41, 46, 47, 48, 50, 51, 53 AND 54

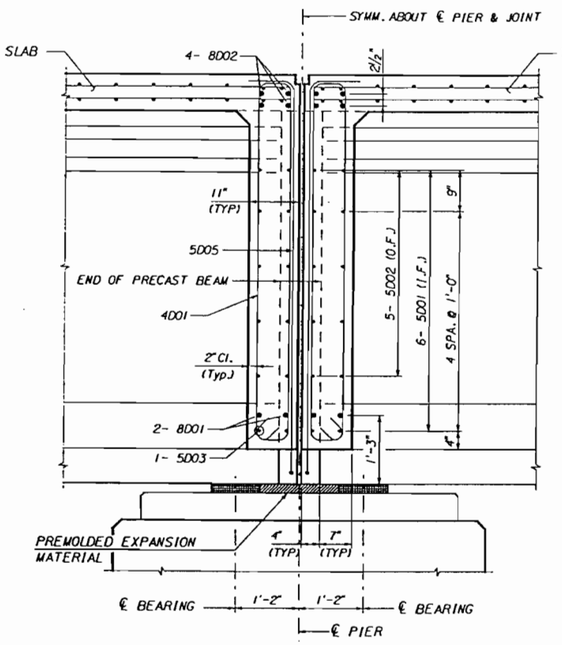

SECTION AT PIERS 35, 38, 49 AND 52

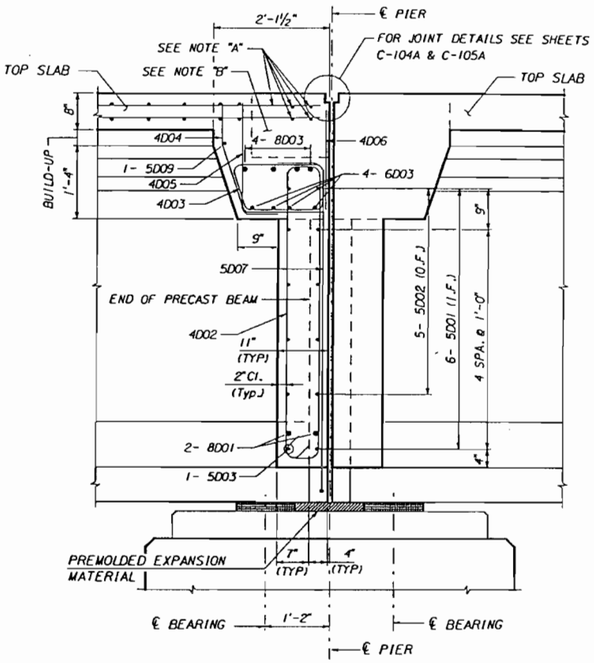

SECTION AT PIERS 42 AND 45

NOTE "A": EXTEND TOP AND BOTTOM SLAB REINFORCING BETWEEN EXPANSION JOINT SUPPORT BOXES AND ANCHORAGE ASSEMBLIES. FIELD CUT SLAB REINFORCING AS REQUIRED TO PROVIDE 2" CLEARANCE FROM SUPPORT BOXES OR ANCHORAGE ASSEMBLIES.

NOTE "B": POUR TOP HALF OF DIAPHRAGM (FINAL DECK POUR) AFTER ALL BEAM POST-TENSIONING IS COMPLETED.

NOTE "C": ADJUST SPLICE LENGTH TO PROVIDE 2" CLEARANCE FROM SUPPORT BOXES OR ANCHORAGE ASSEMBLIES.

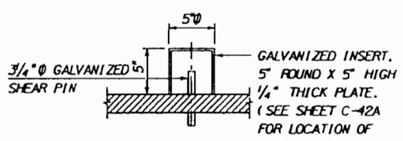

DETAIL A

NOTES FOR FUTURE BEARING PAD REPLACEMENT

1. WHEN REPLACING ANY OR ALL OF THE BEARING PADS, ALL GIRDERS MUST BE LIFTED SIMULTANEOUSLY.
2. AT ALL PIERS JACKS SHALL BE PLACED ALONG THE ℄ OF THE DIAPHRAGM AND ADJCENT TO ALL GIRDERS.
3. AT END BENTS 1 AND 64, JACKS SHALL BE PLACED UNDER GIRDERS 1,4,6 AND 9 IN FRONT OF THE PEDESTALS AT 12" FROM EDGE AND ALONG THE ℄ OF THE DIAPHRAGM ADJACENT TO GIRDERS 2,3,5,7 AND 8.
4. JACKS SHALL BE CONNECTED THROUGH A MANIFOLD TO PERMIT INDIVIDUAL ADJUSTMENT OF JACK PRESSURES TO PROVIDE EQUAL STROKE IN ALL JACKS. JACKING SHALL BE LIMITED TO A 1/4" MAXIMUM LIFT.
5. PROPERLY SIZED SHIM PLATES SHALL BE PROVIDED TO LIMIT ULTIMATE LOAD BEARING STRESS ON CONCRETE ACCORDING TO ARTICLE 8.16.7 OF AASHTO STANDARD SPECIFICATIONS.
6. MAXIMUM ANTICIPATED JACK REACTIONS ARE SERVICE LEVEL LOADS.
7. JACKS SHALL BE EQUIPPED WITH A LOCKING RING WHICH WILL PREVENT MOVEMENT IN THE EVENT THAT HYDRAULIC PRESSURE IS LOST. ALSO, JACKS SHALL BE LOCKED OFF PRIOR TO REMOVAL OF ANY BEARING PAD.
8. THE JACKING EQUIPMENT IS NOT PART OF THE CONTRACT AND DOES NOT NEED TO BE PROVIDED BY THE CONTRACTOR.
9. BRIDGE DECK AND DIAPHRAGM MUST BE IN PLACE BEFORE JACKING.
10. SEE DETAIL AND TABLE FOR JACK LOCATIONS AND MAXIMUM ANTICIPATED JACK REACTIONS.
11. DURING PAD RLPLACEMENT, TRAFFIC SHALL BE LIMITED TO THE INTERIOR BAYS.

END BENT OR PIER	GIRDER	DISTANCE "A" (MAXIMUM)	ANTICIPATED JACKING REACTION (MAX., SERVICE LOADS)
1 AND 64	2,3,5,7 AND 8	2'-0" K	85 KIPS
	1,4,6 AND 9	0"	170 KIPS
2 THRU 32 (BK) AND 55 (AH) THRU 63	2 THRU 8	2'-0" K	85 KIPS
	1 AND 9	2'-0"	100 KIPS
32 (AH) THRU 42 (BK) AND 45 (AH) THRU 55 (BK)	2 THRU 7	2'-3" K	108 KIPS
	1 AND 8	2'-6"	280 KIPS

K PLACE JACKS AT BOTH SIDES OF GIRDERS

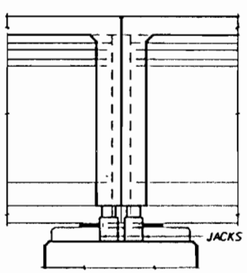

SECTION A-A

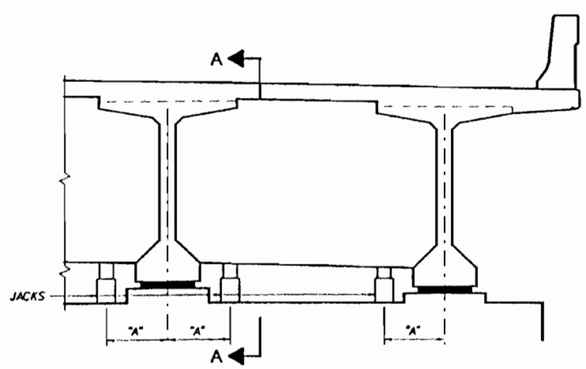

FUTURE BEARING PAD REPLACEMENT DETAIL

6 MAY 96

FINLEY McNARY/JANSSEN SPAANS
a Joint Venture

Finley McNary Engineers, Inc.
1391 Timberlane Road Suite 200
Tallahassee, Florida 32312-1721

Janssen & Spaans Engineers, Inc.
2825 East 56th Street
Indianapolis, Indiana 46220

REVISIONS

DATE	BY	DESCRIPTION	DATE	BY	DESCRIPTION	DATE	BY	DESCRIPTION	DATE	BY

	NAME	DATE
DR. BY	J.L.S.	5/96
CHK. BY	C.W.K.	5/96
SUPV.	H.D.R.	5/96

FINLEY McNARY/JANSSEN SPAANS

BOARD OF COUNTY COMMISSIONERS
LEE, COUNTY, FLORIDA
DEPARTMENT OF TRANSPORTATION

MIDPOINT BRIDGE
MISCELLANEOUS SUPERSTRUCTURE DETAILS(1)
SPANS 32 -41 AND 45 - 54

PROJECT NO.	SHEET NO.
5896	C-73A2

BX1-84

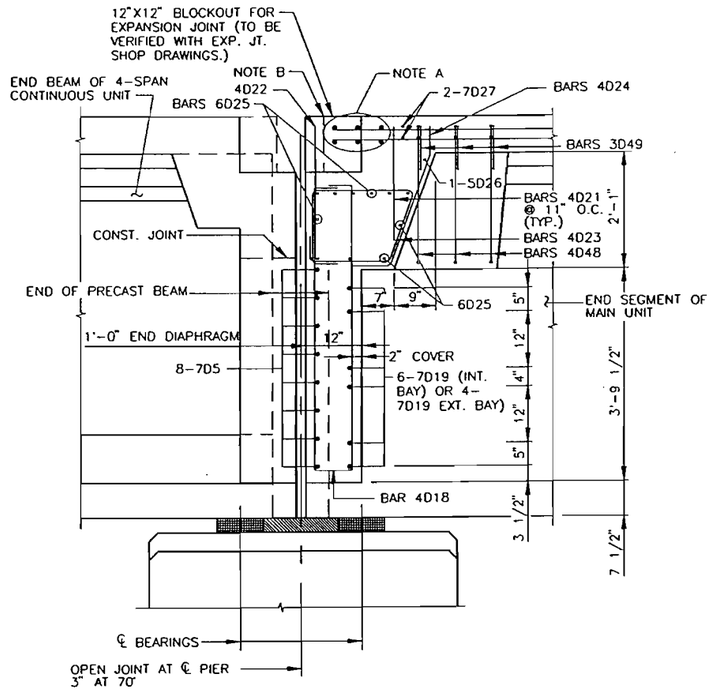

SECTION AT PIERS 42 & 45 (OPPOSITE HAND)

NOTE: SEE SHEET C-73A FOR NOTES "A" AND "B"

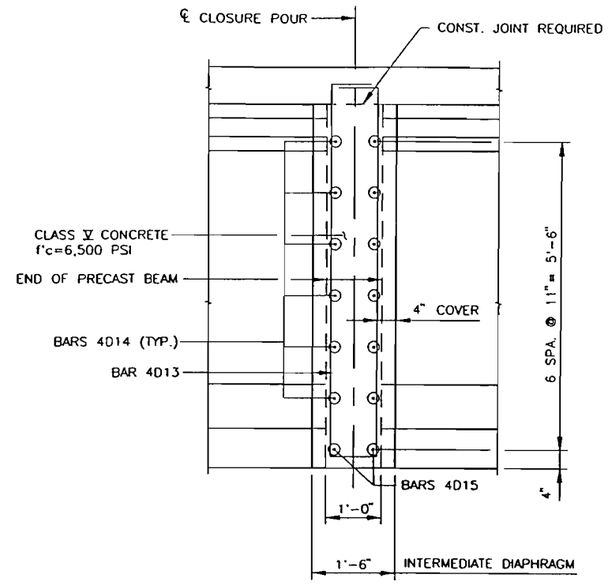

SECTION AT MAIN UNIT CLOSURE POUR

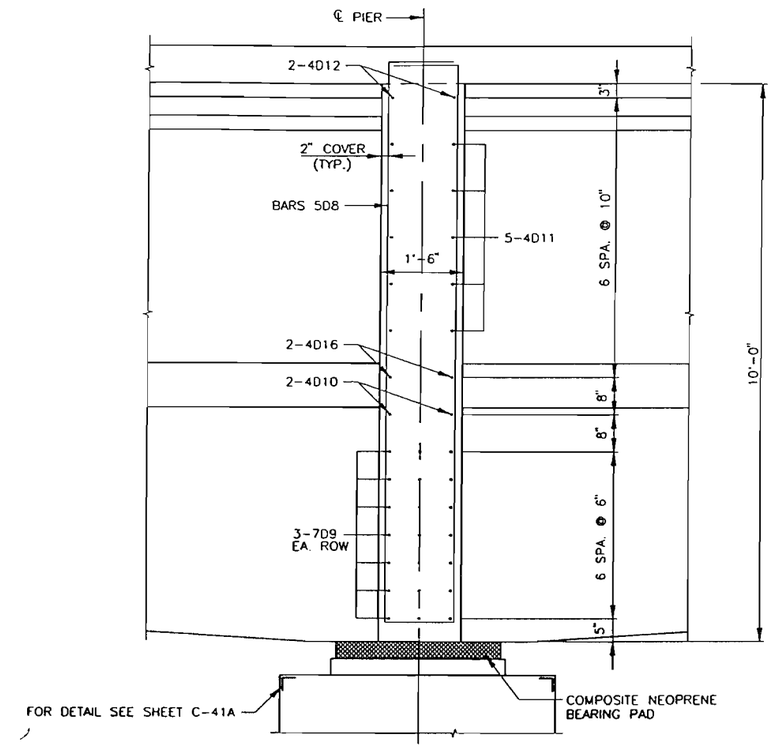

SECTION AT PIER NOS. 43 & 44

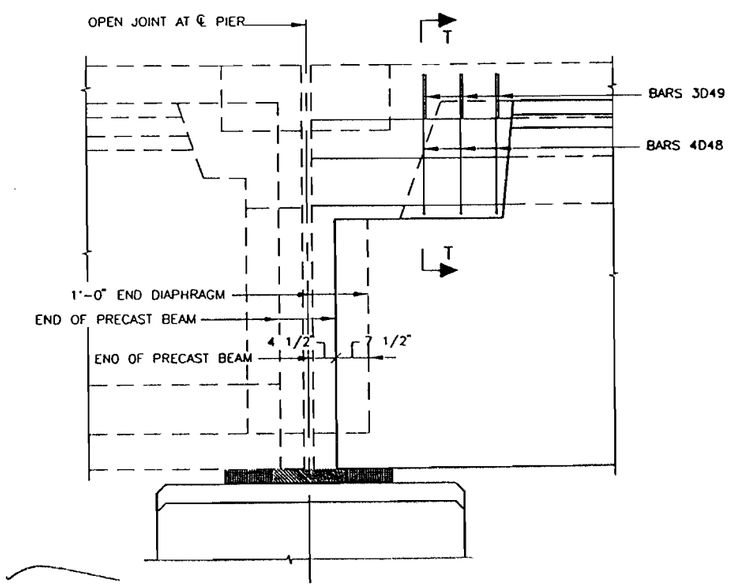

SECTION AT PIERS 42 & 45 (OPPOSITE HAND)

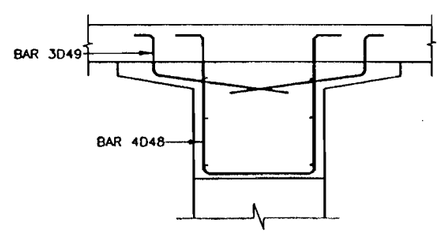

SECTION T-T

Michael J. Halter
5/3/96

FUTURE BEARING PAD REPLACEMENT			
END BENT OR PIER	GIRDER	DISTANCE "A" (MAXIMUM)	ANTICIPATED JACKING REACTION (MAX., SERVICE LOADS)
42 (AH) AND 45 (BK)	2 THRU 7	2'-0" *	128 KIPS
	1 AND 8	2'-3"	184 KIPS
43 AND 44	2 THRU 7	2'-3" *	397 KIPS
	1 AND 8	0"	623 KIPS (TOTAL)

* PLACE JACKS AT BOTH SIDES OF GIRDERS

NOTE: SEE SHEET 73A FOR NOTES AND CROSS-SECTION

FINLEY McNARY/JANSSEN SPAANS
a Joint Venture
Finley McNary Engineers, Inc
1391 Timberlane Road Suite 200
Tallahassee, Florida 32312-1721
Janssen & Spaans Engineers, Inc.
2825 East 56th Street
Indianapolis, Indiana 46220

REVISIONS

DATE	BY	DESCRIPTION	DATE	BY	DESCRIPTION	DATE	BY	DESCRIPTION	DATE	BY

	NAME	DATE
DR. BY	TAL	1/96
CHK. BY	MJH	1/96

FINLEY McNARY/JANSSEN SPAANS

BOARD OF COUNTY COMMISSIONERS
LEE, COUNTY, FLORIDA
DEPARTMENT OF TRANSPORTATION

MIDPOINT BRIDGE
SUPERSTRUCTURE DETAILS

PROJECT NO.	SHEET NO.
5896	C-74

BX1-85

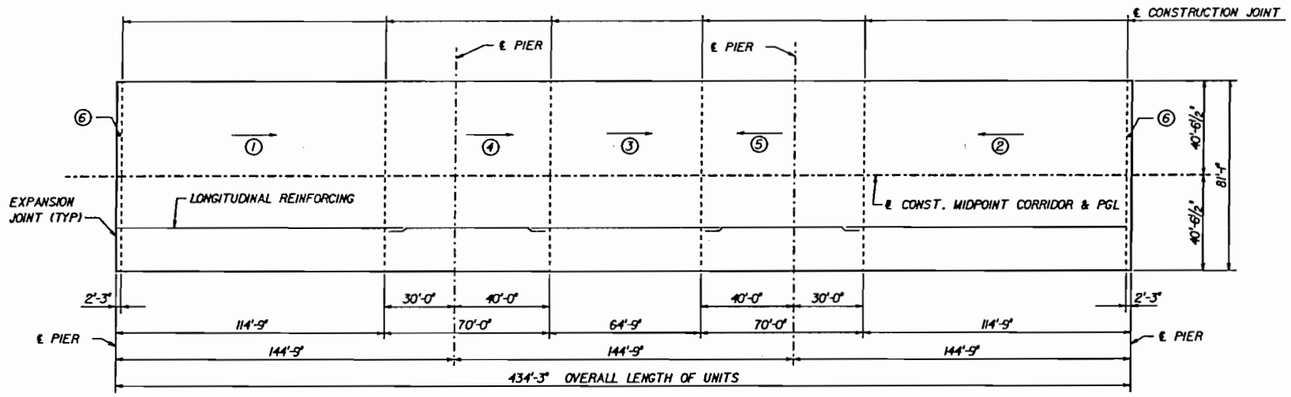

DECK POURING SEQUENCE OF UNITS I, J, N, P

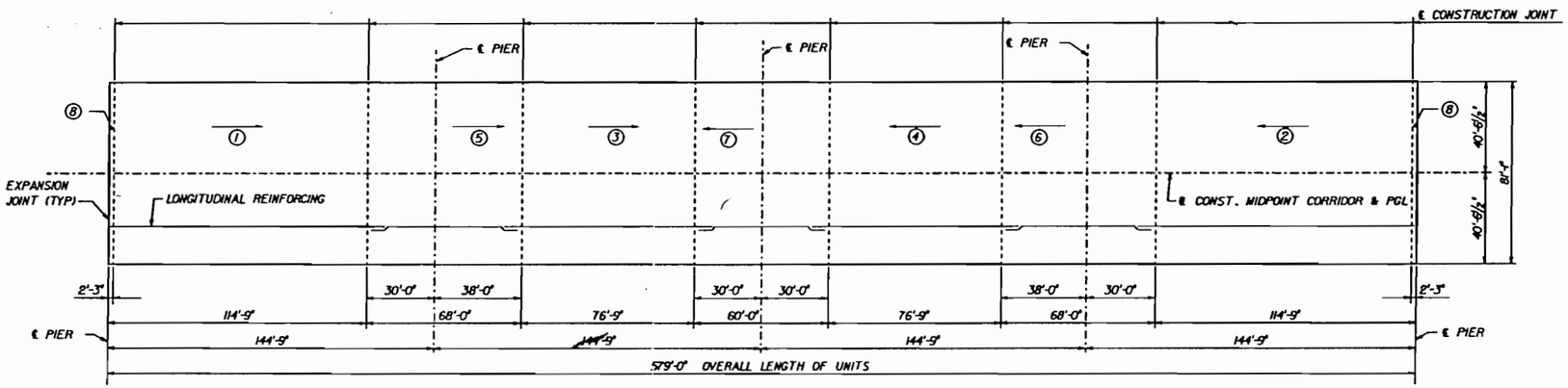

DECK POURING SEQUENCE OF UNITS K & M

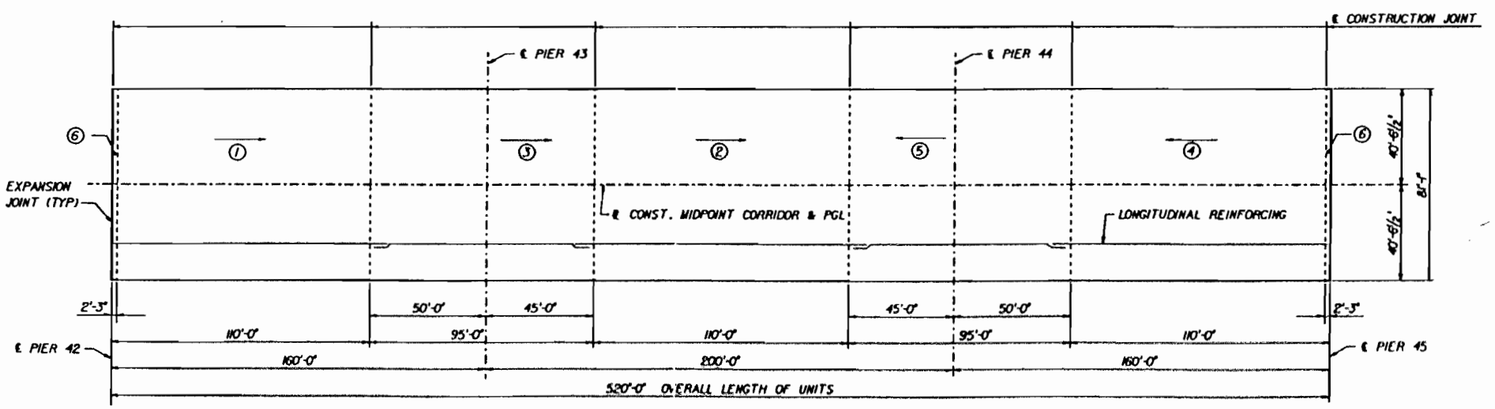

DECK POURING SEQUENCE OF MAIN SPAN UNIT L

NOTES

1. CIRCLE NUMBERS INDICATE POURING SEQUENCE.
2. THE CONTRACTOR SHALL ADJUST THE SET-TIME OF THE CONCRETE MIX WITH RETARDANTS AS NECESSARY TO ASSURE COMPLETE PLACEMENT OF ALL DECK CONCRETE BETWEEN CONSTRUCTION JOINTS BEFORE INITIAL SET BEGINS IN THE PLASTIC CONCRETE.
3. NO UNIT SHALL BE PLACED ADJACENT TO A PREVIOUSLY PLACED UNIT THAT IS NOT A MINIMUM OF 72 HOURS OLD.
4. UNITS WITH IDENTICAL LABLES MAY BE PLACED INDIVIDUALLY OR SIMULTANEOUSLY.
5. THE CONTRACTOR MAY REVISE THE POURING SEQUENCE PROVIDED A NEW STRUCTURAL ANALYSIS IS PERFORMED BY THE CONTRACTOR'S ENGINEER AND NEW CAMBER DIAGRAMS ARE CALCULATED AND THESE CALCULATIONS, ALONG WIN DRAWINGS SHOWING THE REVISED SEQUENCE, ARE SUBMITTED TO AND APPROVED BY THE ENGINEER.
6. SEE ERECTION SEQUENCE, SHEET C-98 FOR ADDITIONAL POURING SEQUENCE REQUIREMENTS.
7. BRIDGE DECK SHALL BE SCREEDED ALONG THE FULL DECK WIDTH (81'-4") FACIA TO FACIA ON ALL POURS. LONGITUDINAL CONSTRUCTION JOINTS WILL NOT BE PERMITTED.

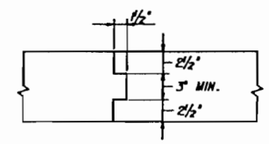

SLAB CONSTRUCTION JOINT

REINFORCING STEEL SHALL BE CONTINUOUS THRU CONSTRUCTION JOINTS.

3/3/95

REVISIONS											
DATE	BY	DESCRIPTION	DATE	BY	DESCRIPTION	DATE	BY	DESCRIPTION	DATE	BY	DESCRIPTION

	NAME	DATE
DR. BY	SG	7/94
CHK. BY	MCM	7/94
SUPV.	REJ	7/94

Greiner Greiner, Inc. Tampa, Florida

Engineers, Architects and Planners

BOARD OF COUNTY COMMISSIONERS
LEE COUNTY, FLORIDA
DEPARTMENT OF TRANSPORTATION

MIDPOINT BRIDGE
MISCELLLANEOUS SUPERSTRUCTURE
DETAIL SPANS 32 THRU 54 (2)

FILECITY

PLOTTED: 27-JUN-95 09:50:00

#IMDIAT, C:\5896000.DADD.FG, BDECNP25.FGBJ

PROJECT NO.	SHEET NO.
5896	C-74A

BX1-86

ESTIMATED QUANTITIES

ITEM		UNIT	UNIT 'A'			UNIT 'B'				UNIT 'C'				UNIT 'D'			
			SPAN 1	SPAN 2	SPAN 3	SPAN 4	SPAN 5	SPAN 6	SPAN 7	SPAN 8	SPAN 9	SPAN 10	SPAN 11	SPAN 12	SPAN 13	SPAN 14	SPAN 15
CLASS II CONCRETE (SUPERSTRUCTURE)	SLAB	CU. YD.	188.04	188.04	188.04	188.04	188.04	188.04	188.04	188.04	188.04	188.04	188.04	188.04	188.04	188.04	188.04
	HAUNCH		7.83	7.83	7.83	7.83	7.83	7.83	7.83	7.83	7.83	7.83	6.56	6.66	5.62	5.39	5.37
	DIAPHRAGMS		16.39	16.39	16.39	16.39	16.39	16.39	16.39	16.39	16.39	16.39	16.39	16.39	16.39	16.39	16.39
	TOTAL		212.26	212.26	212.26	212.26	212.26	212.26	212.26	212.26	212.26	212.26	210.99	211.09	210.05	209.82	209.80
PRESTRESSED CONCRETE GIRDERS (TYPE IV)		LIN. FT.	837.17	838.67	837.73	837.73	838.67	838.67	837.73	837.73	838.67	838.67	837.73	837.79	838.78	838.78	837.75
REINFORCING STEEL (SUPERSTRUCTURE)		LBS.	138,937			186,126				186,126				183,332			

ESTIMATED QUANTITIES

ITEM		UNIT	UNIT 'E'				UNIT 'F'				UNIT 'G'				UNIT 'H'			
			SPAN 16	SPAN 17	SPAN 18	SPAN 19	SPAN 20	SPAN 21	SPAN 22	SPAN 23	SPAN 24	SPAN 25	SPAN 26	SPAN 27	SPAN 28	SPAN 29	SPAN 30	SPAN 31
CLASS II CONCRETE (SUPERSTRUCTURE)	SLAB	CU. YD.	188.04	188.04	188.04	188.04	188.04	188.04	188.04	188.04	188.04	188.04	188.04	188.04	188.04	188.04	188.04	190.56
	HAUNCH		6.53	5.67	5.67	5.67	5.67	5.67	5.67	5.67	5.67	5.67	5.67	5.67	6.48	6.62	6.62	6.62
	DIAPHRAGMS		16.39	16.39	16.39	16.39	16.39	16.39	16.39	16.39	16.39	16.39	16.39	16.39	16.39	16.39	16.39	14.64
	TOTAL		210.96	210.10	210.10	210.10	210.10	210.10	210.10	210.10	210.10	210.10	210.10	210.10	210.91	211.05	211.05	211.82
PRESTRESSED CONCRETE GIRDERS (TYPE IV)		LIN. FT.	837.75	838.78	838.78	837.75	837.75	838.78	838.78	837.75	837.75	838.78	838.78	837.75	837.75	838.78	838.78	837.0
REINFORCING STEEL (SUPERSTRUCTURE)		LBS.	183,043				183,043				183,043				184,069			

ESTIMATED QUANTITIES

ITEM		UNIT	UNIT 'R'			UNIT 'S'			UNIT 'T'		
			SPAN 55	SPAN 56	SPAN 57	SPAN 58	SPAN 59	SPAN 60	SPAN 61	SPAN 62	SPAN 63
CLASS II CONCRETE (SUPERSTRUCTURE)	SLAB	CU. YD.	190.56	188.04	188.04	188.04	188.04	188.04	188.04	188.04	188.04
	HAUNCH		6.53	6.25	7.30	7.43	7.83	7.83	7.83	7.71	7.83
	DIAPHRAGMS		14.64	16.39	16.39	16.39	16.39	16.39	16.39	16.39	16.39
	TOTAL		211.73	210.68	211.73	211.86	212.26	212.26	212.26	212.14	212.26
PRESTRESSED CONCRETE GIRDERS (TYPE IV)		LIN. FT.	837.0	838.78	837.81	837.73	838.67	837.73	837.73	838.67	837.17
REINFORCING STEEL (SUPERSTRUCTURE)		LBS.	139,055			139,098			139,098		

SPANS 1 THRU 31 AND 55 THRU 63

ESTIMATED QUANTITIES

ITEM		UNIT	UNIT 'I'			UNIT 'J'			UNIT 'K'				UNIT 'L'			UNIT 'M'			
			SPAN 32	SPAN 33	SPAN 34	SPAN 35	SPAN 36	SPAN 37	SPAN 38	SPAN 39	SPAN 40	SPAN 41	SPAN 42	SPAN 43	SPAN 44	SPAN 45	SPAN 46	SPAN 47	SPAN 48
CLASS II CONCRETE (SUPERSTRUCTURE)	SLAB	CU. YD.	302.52	292.22	302.52	302.52	292.22	302.52	302.52	292.22	292.22	302.52	333.38	404.02	333.38	302.52	292.22	292.22	302.52
	HAUNCH		32.87	31.65	24.45	24.45	24.45	24.45	24.45	24.45	22.62	20.86	33.75	44.82	32.38	20.86	21.85	24.45	24.45
	DIAPHRAGMS		9.88	-	9.88	9.88	-	9.88	9.88	-	-	9.88	25.64	31.50	25.64	9.88	-	-	9.88
	TOTAL		345.27	323.87	336.85	336.85	316.67	336.85	336.85	316.67	314.84	333.26	392.77	480.34	391.40	333.26	314.07	316.67	336.85
CLASS V CONCRETE (SUPERSTRUCTURE)	CLOSURE POUR/DIAPHRAGMS		12.85	25.69	12.85	12.85	25.69	12.85	12.85	25.69	25.69	12.85	24.62	49.24	24.62	12.85	25.69	25.69	12.85
PRESTRESSED CONCRETE GIRDERS (SPECIAL)		LIN. FT.	1294.88	1295.06	1295.06	1295.25	1295.06	1295.06	1295.06	1295.25	1295.06	1294.88	-	-	-	1294.88	1295.06	1295.25	1295.06
PRESTRESSED CONCRETE GIRDERS (SPECIAL-SEGMENTAL)		LIN. FT.	-	-	-	-	-	-	-	-	-	-	4637.06			-	-	-	-
REINFORCING STEEL (SUPERSTRUCTURE)		LBS.	186848			186848			248535				271930			248535			

ESTIMATED QUANTITIES

ITEM		UNIT	UNIT 'N'			UNIT 'P'		
			SPAN 49	SPAN 50	SPAN 51	SPAN 52	SPAN 53	SPAN 54
CLASS II CONCRETE (SUPERSTRUCTURE)	SLAB	CU. YD.	302.52	292.22	302.52	302.52	292.22	302.52
	HAUNCH		24.45	24.45	24.45	24.45	32.33	37.69
	DIAPHRAGMS		9.88	-	9.88	9.88	-	9.88
	TOTAL		336.85	316.67	336.85	336.85	324.55	350.09
CLASS V CONCRETE (SUPERSTRUCTURE)	CLOSURE POURS/DIAPHRAGMS		12.85	25.69	12.85	12.85	25.69	12.85
PRESTRESSED CONCRETE GIRDERS (SPECIAL)		LIN. FT.	1295.06	1295.06	1295.25	1295.06	1295.06	1294.88
REINFORCING STEEL (SUPERSTRUCTURE)		LBS.	186848			186848		

SPANS 32 THRU 54

3/3/93

WORK THIS SHEET WITH SHEETS C-64 THRU C-74

REVISIONS											
DATE	BY	DESCRIPTION	DATE	BY	DESCRIPTION	DATE	BY	DESCRIPTION	DATE	BY	DESCRIPTION

	NAME	DATE
DR. BY	JBW	5/93
CHK. BY	WSO	7/94
SUPV.	REJ	11/93

Greiner Engineering, Inc. Tampa, Florida

Engineers, Architects and Planners

BOARD OF COUNTY COMMISSIONERS
LEE COUNTY, FLORIDA
DEPARTMENT OF TRANSPORTATION

MIDPOINT BRIDGE
SUPERSTRUCTURE ESTIMATED QUANTITIES

PLOTTED: 27JAN95-09.50.30

FILECITY

$$DIAT: C26\backslash 000.CADD.FG\backslash BDECMP26.FGBJ$$

DISK#DRAW: C26K000.CADD.FG BFRPLNP01.FGBJ

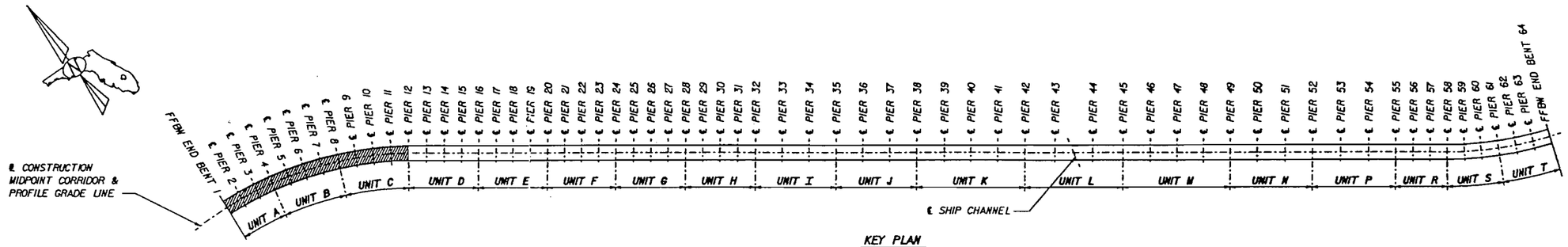

KEY PLAN

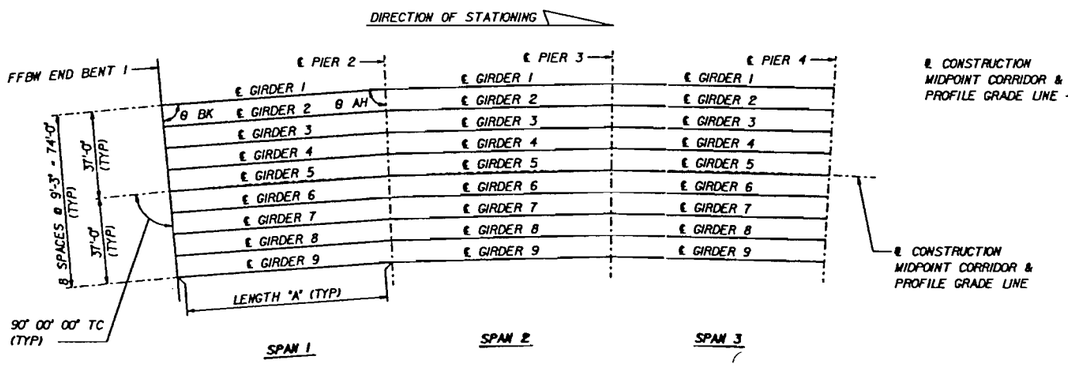

FRAMING PLAN - UNIT A

UNIT A - SPANS 1 THRU 3

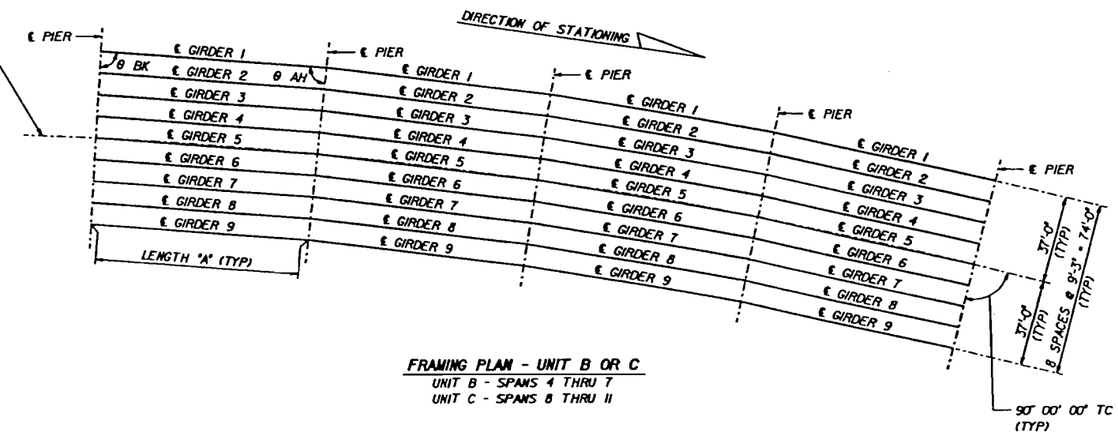

FRAMING PLAN - UNIT B OR C

UNIT B - SPANS 4 THRU 7

UNIT C - SPANS 8 THRU 11

NOTE:
θ (AHEAD) = 90° 00' 00" (UNO)
θ (BACK) = 90° 00' 00" (UNO)

GDR NO.	UNIT A — SPANS 1, 2, & 3					UNITS B & C — SPANS 4 THRU 11				
	BEAM TYPE/ STRAND PATTERN	SPAN LENGTH	LENGTH "A"	θ BACK	θ AHEAD	BEAM TYPE/ STRAND PATTERN	SPAN LENGTH	LENGTH "A"	θ BACK	θ AHEAD
1	N/(43-0)	93'-11"	95'-8 11/16"	88° 35' 29"	88° 35' 29"	N/(43-0)	93'-11"	95'-8 11/16"	88° 35' 29"	88° 35' 29"
2	N/(43-0)	93'-11"	95'-3 3/4"	88° 35' 29"	88° 35' 29"	N/(43-0)	93'-11"	95'-3 3/4"	88° 35' 29"	88° 35' 29"
3	N/(43-0)	93'-11"	94'-9 3/16"	88° 35' 29"	88° 35' 29"	N/(43-0)	93'-11"	94'-9 3/16"	88° 35' 29"	88° 35' 29"
4	N/(43-0)	93'-11"	94'-4 5/16"	88° 35' 29"	88° 35' 29"	N/(43-0)	93'-11"	94'-4 5/16"	88° 35' 29"	88° 35' 29"
5	N/(45-0)	93'-11"	93'-10 7/8"	88° 35' 29"	88° 35' 29"	N/(45-0)	93'-11"	93'-10 7/8"	88° 35' 29"	88° 35' 29"
6	N/(42-0)	93'-11"	93'-5 11/16"	88° 35' 29"	88° 35' 29"	N/(42-0)	93'-11"	93'-5 11/16"	88° 35' 29"	88° 35' 29"
7	N/(42-0)	93'-11"	93'-0"	88° 35' 29"	88° 35' 29"	N/(42-0)	93'-11"	93'-0"	88° 35' 29"	88° 35' 29"
8	N/(42-0)	93'-11"	92'-6 1/2"	88° 35' 29"	88° 35' 29"	N/(42-0)	93'-11"	92'-6 1/2"	88° 35' 29"	88° 35' 29"
9	N/(36-0)	93'-11"	92'-1 1/16"	88° 35' 29"	88° 35' 29"	N/(36-0)	93'-11"	92'-1 1/16"	88° 35' 29"	88° 35' 29"

TABLE OF SUBSTRUCTURE STATIONS

ELEMENT	FFBW END BENT 1	℄ PIER 2	℄ PIER 3	℄ PIER 4	℄ PIER 5	℄ PIER 6	℄ PIER 7	℄ PIER 8	℄ PIER 9	℄ PIER 10	℄ PIER 11	℄ PIER 12
STATION	2114+27.08	2115+21.00	2116+14.92	2117+08.83	2118+02.75	2118+96.67	2119+90.58	2120+84.50	2121+78.42	2122+72.33	2123+66.25	2124+60.17

3/3/95

REVISIONS

DATE	BY	DESCRIPTION	DATE	BY	DESCRIPTION	DATE	BY	DESCRIPTION	DATE	BY	DESCRIPTION

	NAME	DATE
DR.BY	MDD	4/93
CHK.BY	REJ	8/93
SUPV.	REJ	7/93

Greiner Engineering, Inc. Tampa, Florida

Engineers, Architects and Planners

BOARD OF COUNTY COMMISSIONERS
LEE COUNTY, FLORIDA
DEPARTMENT OF TRANSPORTATION

MIDPOINT BRIDGE
FRAMING PLAN (1)

FILECCTY

DISK#DRAW: C25K00.LADJ.FG | BFRPWP02.FGB

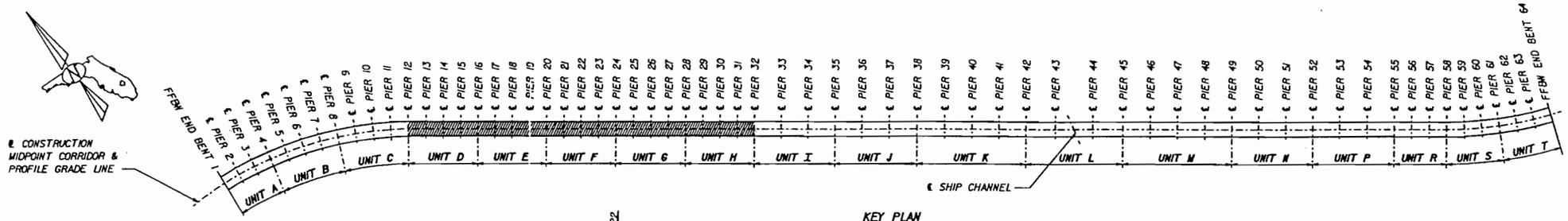

KEY PLAN

TABLE OF SUBSTRUCTURE STATIONS					
ELEMENT	℄ PIER 12	℄ PIER 13	℄ PIER 14	℄ PIER 15	℄ PIER 16
STATION	2124+60.17	2125+54.08	2126+48.00	2127+41.92	2128+35.83

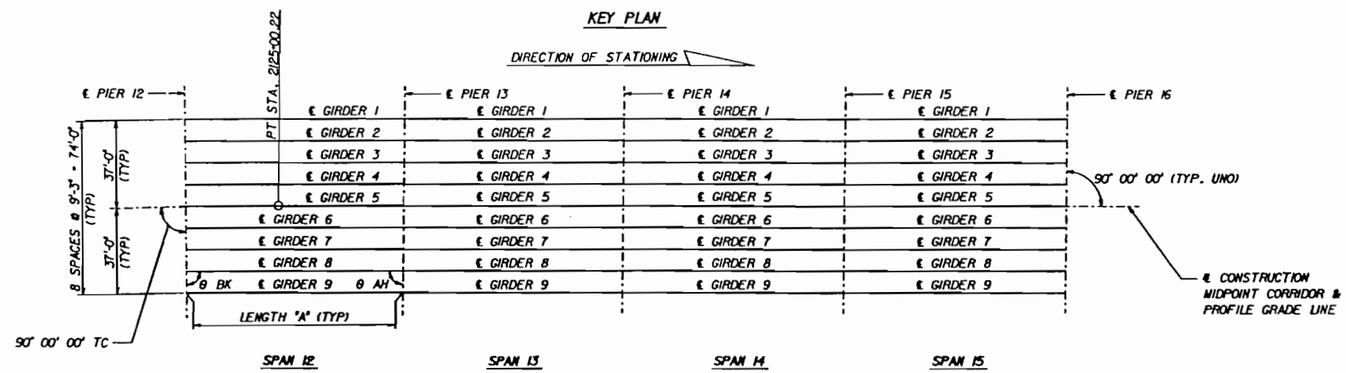

FRAMING PLAN - UNIT D

NOTE:
θ (AHEAD) = 90° 00' 00" (UNO)
θ (BACK) = 90° 00' 00" (UNO)

GDR NO.	UNIT D								UNITS E, F, G & H		
	SPAN 12					SPANS 13 THRU 15			SPANS 16 THRU 31		
	BEAM TYPE/ STRAND PATTERN	SPAN LENGTH	LENGTH "A"	θ BACK	θ AHEAD	BEAM TYPE/ STRAND PATTERN	SPAN LENGTH	LENGTH "A"	BEAM TYPE/ STRAND PATTERN	SPAN LENGTH	LENGTH "A"
1	N/(42-0)	93'-11"	94'-8 1/4"	89° 03' 27"	89° 44' 27"	N/(42-0)	93'-11"	93'-11"	N/(42-0)	93'-11"	93'-11"
2	N/(42-0)	93'-11"	94'-5 5/16"	89° 03' 24"	89° 44' 30"	N/(42-0)	93'-11"	93'-11"	N/(42-0)	93'-11"	93'-11"
3	N/(42-0)	93'-11"	94'-3 3/16"	89° 03' 22"	89° 44' 32"	N/(42-0)	93'-11"	93'-11"	N/(42-0)	93'-11"	93'-11"
4	N/(42-0)	93'-11"	94'-1 5/16"	89° 03' 19"	89° 44' 35"	N/(42-0)	93'-11"	93'-11"	N/(42-0)	93'-11"	93'-11"
5	N/(45-0)	93'-11"	93'-10 5/16"	89° 03' 17"	89° 44' 38"	N/(45-0)	93'-11"	93'-11"	N/(45-0)	93'-11"	93'-11"
6	N/(42-0)	93'-11"	93'-8 3/16"	89° 03' 14"	89° 44' 40"	N/(42-0)	93'-11"	93'-11"	N/(42-0)	93'-11"	93'-11"
7	N/(42-0)	93'-11"	93'-6 5/16"	89° 03' 12"	89° 44' 43"	N/(42-0)	93'-11"	93'-11"	N/(42-0)	93'-11"	93'-11"
8	N/(42-0)	93'-11"	93'-4"	89° 03' 09"	89° 44' 45"	N/(42-0)	93'-11"	93'-11"	N/(42-0)	93'-11"	93'-11"
9	N/(42-0)	93'-11"	93'-1 7/16"	89° 03' 06"	89° 44' 48"	N/(42-0)	93'-11"	93'-11"	N/(42-0)	93'-11"	93'-11"

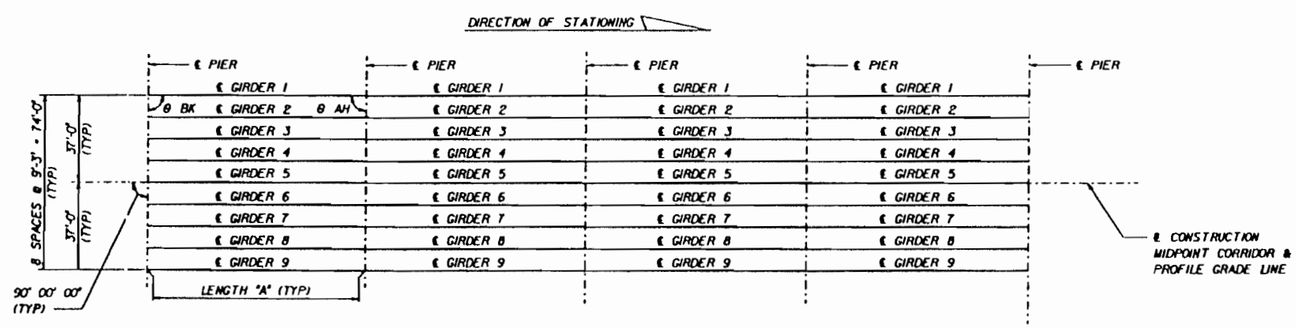

FRAMING PLAN - UNIT E, F, G OR H
UNIT E - SPANS 16 THRU 19
UNIT F - SPANS 20 THRU 23
UNIT G - SPANS 24 THRU 27
UNIT H - SPANS 28 THRU 31

TABLE OF SUBSTRUCTURE STATIONS																		
ELEMENT	℄ PIER 16	℄ PIER 17	℄ PIER 18	℄ PIER 19	℄ PIER 20	℄ PIER 21	℄ PIER 22	℄ PIER 23	℄ PIER 24	℄ PIER 25	℄ PIER 26	℄ PIER 27	℄ PIER 28	℄ PIER 29	℄ PIER 30	℄ PIER 31	℄ PIER 32
STATION	2128+35.83	2129+29.75	2130+23.67	2131+17.58	2132+11.50	2133+05.42	2133+99.33	2134+93.25	2135+87.17	2136+81.08	2137+75.00	2138+68.92	2139+62.83	2140+56.75	2141+50.67	2142+44.58	2143+38.50

3/3/95

REVISIONS											
DATE	BY	DESCRIPTION	DATE	BY	DESCRIPTION	DATE	BY	DESCRIPTION	DATE	BY	DESCRIPTION

	NAME	DATE
DR. BY	MDD	4/93
CHK. BY	REJ	8/93
SUPV.	REJ	7/93

Greiner Engineering, Inc. Tampa, Florida — Engineers, Architects and Planners

BOARD OF COUNTY COMMISSIONERS
LEE COUNTY, FLORIDA
DEPARTMENT OF TRANSPORTATION

MIDPOINT BRIDGE
FRAMING PLAN (2)

FRLECCTY

PLOTTED: 27JAN95-08:48:10

PROJECT NO.	SHEET NO.
5896	C-77A

BX1-89

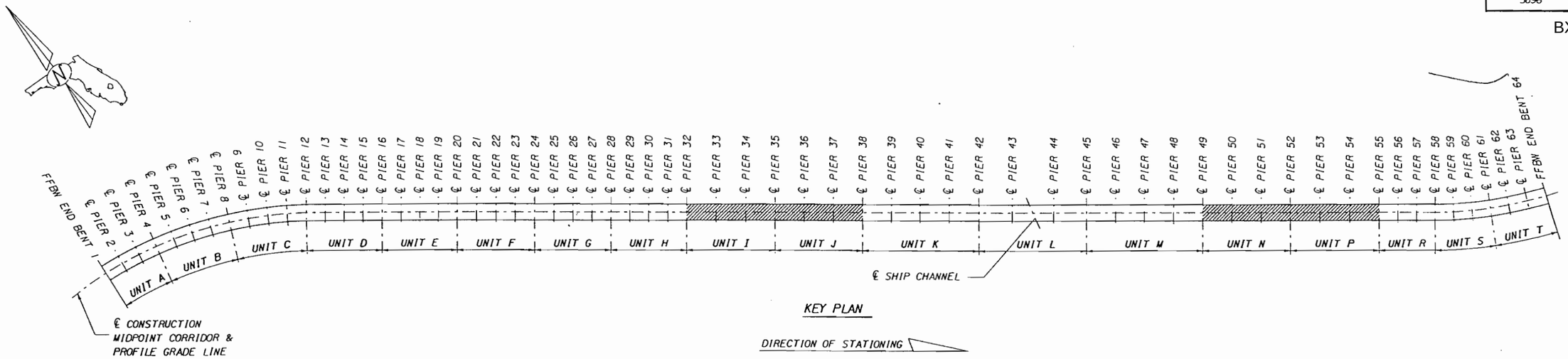

KEY PLAN

DIRECTION OF STATIONING

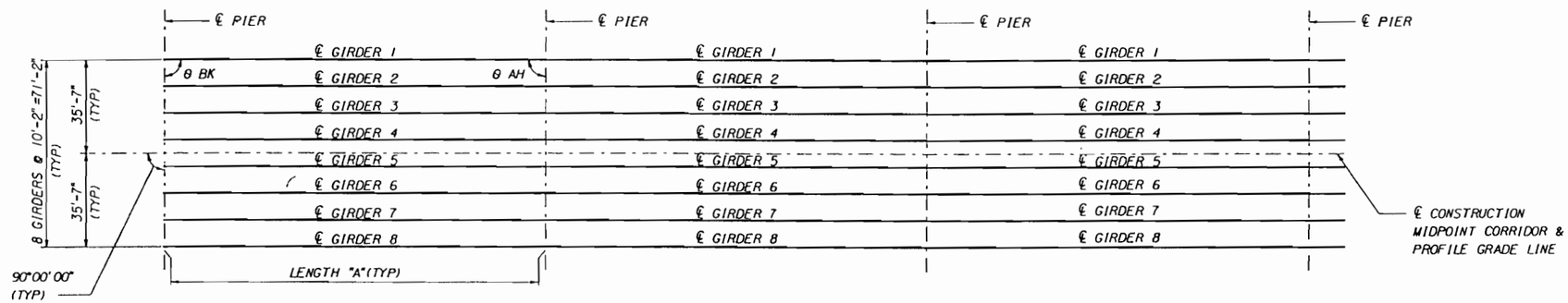

NOTE:
θ (AHEAD) = 90°00'00"
θ (BACK) = 90°00'00"

FRAMING PLAN - UNIT I, J, N OR P

UNIT I - SPANS 32 THRU 34
UNIT J - SPANS 35 THRU 37
UNIT N - SPANS 49 THRU 51
UNIT P - SPANS 52 THRU 54

	UNITS I & J			UNITS N & P		
GDR NO.	SPANS 32 THRU 37			SPANS 49 THRU 54		
	BEAM TYPE	SPAN LENGTH	LENGTH "A"	BEAM TYPE	SPAN LENGTH	LENGTH "A"
1	MOD. TYPE VI	144'-9"	144'-9"	MOD. TYPE VI	144'-9"	144'-9"
2	MOD. TYPE VI	144'-9"	144'-9"	MOD. TYPE VI	144'-9"	144'-9"
3	MOD. TYPE VI	144'-9"	144'-9"	MOD. TYPE VI	144'-9"	144'-9"
4	MOD. TYPE VI	144'-9"	144'-9"	MOD. TYPE VI	144'-9"	144'-9"
5	MOD. TYPE VI	144'-9"	144'-9"	MOD. TYPE VI	144'-9"	144'-9"
6	MOD. TYPE VI	144'-9"	144'-9"	MOD. TYPE VI	144'-9"	144'-9"
7	MOD. TYPE VI	144'-9"	144'-9"	MOD. TYPE VI	144'-9"	144'-9"
8	MOD. TYPE VI	144'-9"	144'-9"	MOD. TYPE VI	144'-9"	144'-9"

TABLE OF SUBSTRUCTURE STATIONS

ELEMENT	℄ PIER 32	℄ PIER 33	℄ PIER 34	℄ PIER 35	℄ PIER 36	℄ PIER 37	℄ PIER 38	℄ PIER 49	℄ PIER 50	℄ PIER 51	℄ PIER 52	℄ PIER 53	℄ PIER 54	℄ PIER 55
STATION	2143+38.50	2144+83.25	2146+28.00	2147+72.75	2149+17.50	2150+62.25	2152+01.00	2168+85.00	2170+29.75	2171+74.50	2173+19.25	2174+64.00	2176+08.75	2177+53.50

HDR 6 MAY 96

FINLEY McNARY/JANSSEN SPAANS
a Joint Venture

Finley McNary Engineers, Inc.
1391 Timberlane Road Suite 200
Tallahassee, Florida 32312-1721

Janssen & Spaans Engineers, Inc.
2825 East 56th Street
Indianapolis, Indiana 46220

REVISIONS

DATE	BY	DESCRIPTION	DATE	BY	DESCRIPTION	DATE	BY	DESCRIPTION	DATE	BY	

	NAME	DATE
DR. BY	J.J.S.	1/96
CHK. BY	C.H.H.	1/96
SUPV.	H.D.R.	1/96

FINLEY McNARY/JANSSEN SPAANS

BOARD OF COUNTY COMMISSIONERS
LEE COUNTY, FLORIDA
DEPARTMENT OF TRANSPORTATION

MIDPOINT BRIDGE
FRAMING PLAN (3)

PROJECT NO	SHEET NO
5896	C-78A

BX1-90

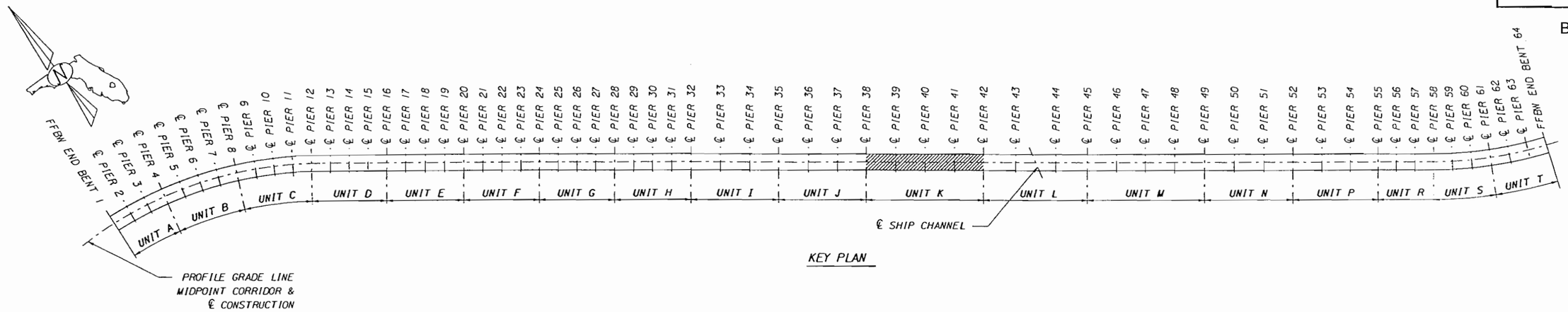

KEY PLAN

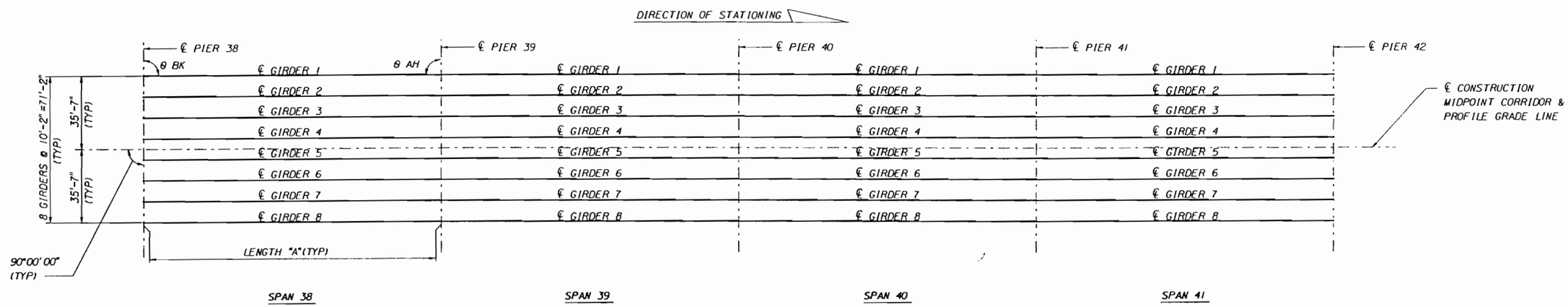

FRAMING PLAN - UNIT K

UNIT K - SPANS 38 THRU 41

NOTE:
θ (AHEAD) = 90°00'00" (UNO)
θ (BACK) = 90°00'00" (UNO)

UNIT K			
GDR NO.	SPANS 38 THRU 41		
	BEAM TYPE	SPAN LENGTH	LENGTH "A"
1	MOD. TYPE VI	144'-9"	144'-9"
2	MOD. TYPE VI	144'-9"	144'-9"
3	MOD. TYPE VI	144'-9"	144'-9"
4	MOD. TYPE VI	144'-9"	144'-9"
5	MOD. TYPE VI	144'-9"	144'-9"
6	MOD. TYPE VI	144'-9"	144'-9"
7	MOD. TYPE VI	144'-9"	144'-9"
8	MOD. TYPE VI	144'-9"	144'-9"

TABLE OF SUBSTRUCTURE STATIONS					
ELEMENT	℄ PIER 38	℄ PIER 39	℄ PIER 40	℄ PIER 41	℄ PIER 42
STATION	2152+07.00	2153+51.75	2154+96.50	2156+41.25	2157+86.00

HDR 6 MAY 96

FINLEY McNARY/JANSSEN SPAANS
a Joint Venture

Finley McNary Engineers, Inc.
1391 Timberlane Road, Suite 2
Tallahassee, Florida 32312-1172

Janssen & Spaans Engineers, Inc.
2825 East 56th Street
Indianapolis, Indiana 46220

REVISIONS

DATE	BY	DESCRIPTION	DATE	BY	DESCRIPTION	DATE	BY	DESCRIPTION	DATE	BY	

	NAME	DATE
DR. BY	J.J.S.	1/96
CHK. BY	C.W.R.	1/96
SUPV.	H.D.R.	1/96

FINLEY McNARY/JANSSEN SPAANS

BOARD OF COUNTY COMMISSIONERS
LEE, COUNTY, FLORIDA
DEPARTMENT OF TRANSPORTATION

MIDPOINT BRIDGE
FRAMING PLAN (4)

PROJECT NO	SHEET NO
5896	C-79A

BX1-91

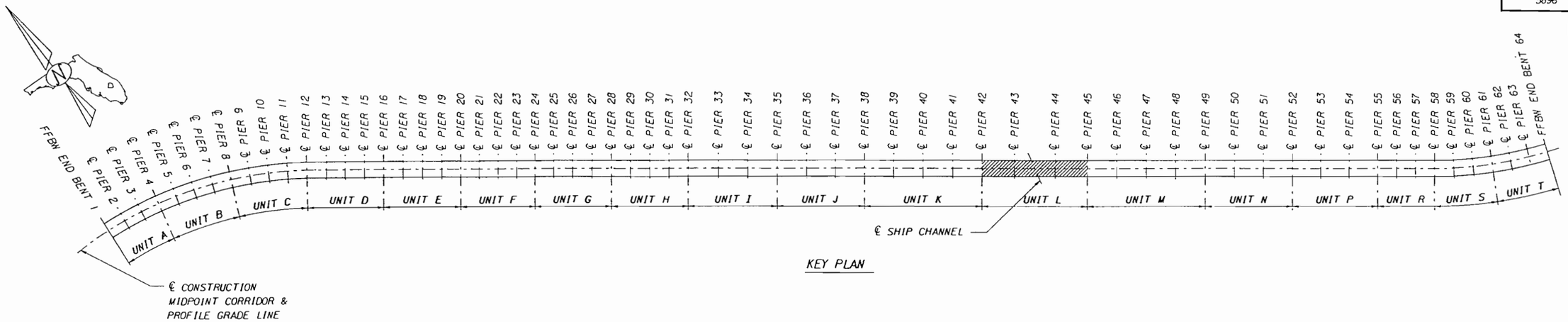

KEY PLAN

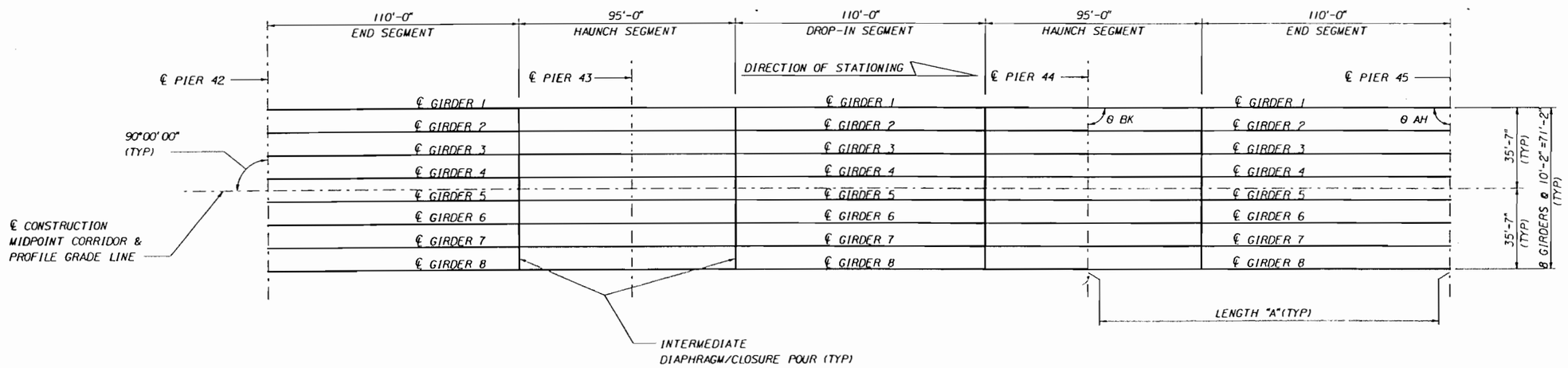

FRAMING PLAN - UNIT L

UNIT L - SPANS 42 THRU 44

NOTE:
θ (AHEAD) = 90°00'00" (UNO)
θ (BACK) = 90°00'00" (UNO)

UNIT L						
GDR NO.	SPANS 42 & 44			SPAN 43		
	BEAM TYPE	SPAN LENGTH	LENGTH "A"	BEAM TYPE	SPAN LENGTH	LENGTH "A"
1	MOD. MOD. TYPE VI	160'-0"	160'-0"	MOD. MOD. TYPE VI	200'-0"	200'-0"
2	MOD. MOD. TYPE VI	160'-0"	160'-0"	MOD. MOD. TYPE VI	200'-0"	200'-0"
3	MOD. MOD. TYPE VI	160'-0"	160'-0"	MOD. MOD. TYPE VI	200'-0"	200'-0"
4	MOD. MOD. TYPE VI	160'-0"	160'-0"	MOD. MOD. TYPE VI	200'-0"	200'-0"
5	MOD. MOD. TYPE VI	160'-0"	160'-0"	MOD. MOD. TYPE VI	200'-0"	200'-0"
6	MOD. MOD. TYPE VI	160'-0"	160'-0"	MOD. MOD. TYPE VI	200'-0"	200'-0"
7	MOD. MOD. TYPE VI	160'-0"	160'-0"	MOD. MOD. TYPE VI	200'-0"	200'-0"
8	MOD. MOD. TYPE VI	160'-0"	160'-0"	MOD. MOD. TYPE VI	200'-0"	200'-0"

TABLE OF SUBSTRUCTURE STATIONS				
ELEMENT	℄ PIER 42	℄ PIER 43	℄ PIER 44	℄ PIER 45
STATION	2157+86.00	2159+46.00	2161+46.00	2163+06.00

6 MAY 90

FINLEY McNARY/JANSSEN SPAANS
a Joint Venture

Finley McNary Engineers, Inc
1391 Timberlane Road Suite 200
Tallahassee, Florida 32312-1721

Janssen & Spaans Engineers, Inc
2825 East 56th Street
Indianapolis, Indiana 46220

REVISIONS											
DATE	BY	DESCRIPTION	DATE	BY	DESCRIPTION	DATE	BY	DESCRIPTION	DATE	BY	

	NAME	DATE
DR. BY	J.L.S.	5/96
CHK. BY	C.W.H.	5/96
SUPV.	H.D.R.	5/96

FINLEY McNARY/JANSSEN SPAANS

BOARD OF COUNTY COMMISSIONERS
LEE, COUNTY, FLORIDA
DEPARTMENT OF TRANSPORTATION

MIDPOINT BRIDGE
FRAMING PLAN (5)

PROJECT NO	SHEET NO
5896	C-80A

BX1-92

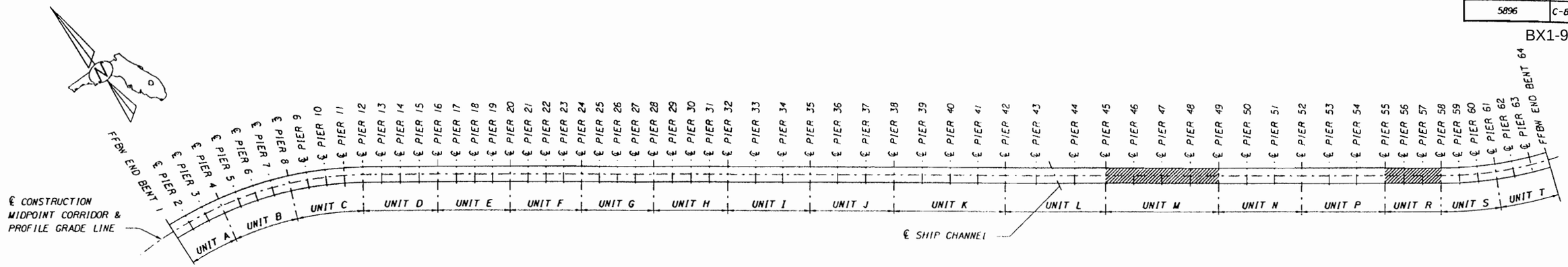

KEY PLAN

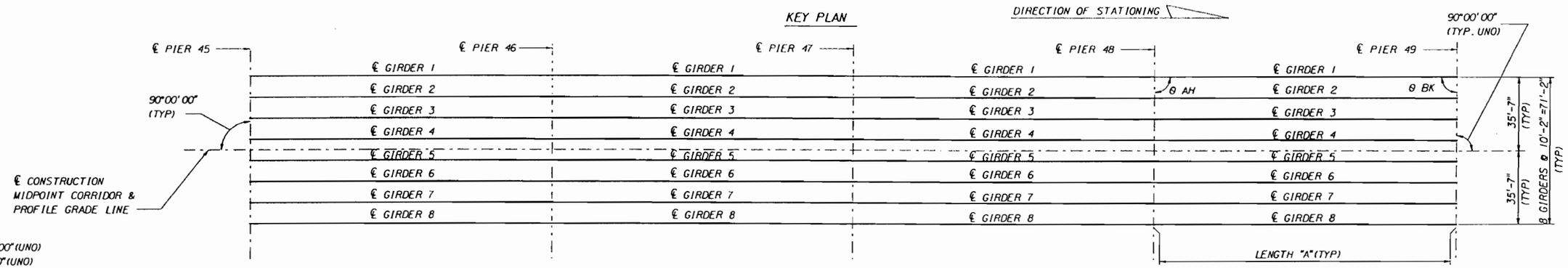

NOTE:
θ (AHEAD) = 90°00'00" (UNO)
θ (BACK) = 90°00'00" (UNO)

UNIT M			
GDR NO.	SPANS 45 THRU 48		
	BEAM TYPE	SPAN LENGTH	LENGTH "A"
1	MOD. TYPE VI	144'-9"	144'-9"
2	MOD. TYPE VI	144'-9"	144'-9"
3	MOD. TYPE VI	144'-9"	144'-9"
4	MOD. TYPE VI	144'-9"	144'-9"
5	MOD. TYPE VI	144'-9"	144'-9"
6	MOD. TYPE VI	144'-9"	144'-9"
7	MOD. TYPE VI	144'-9"	144'-9"
8	MOD. TYPE VI	144'-9"	144'-9"

NOTE:
θ (AHEAD) = 90°00'00" (UNO)
θ (BACK) = 90°00'00" (UNO)

TABLE OF SUBSTRUCTURE STATIONS					
ELEMENT	℄ PIER 45	℄ PIER 46	℄ PIER 47	℄ PIER 48	℄ PIER 49
STATION	2163+06.00	2164+50.75	2165+95.50	2167+40.25	2168+85.00

FRAMING PLAN - UNIT M
UNIT M - SPANS 45 THRU 48

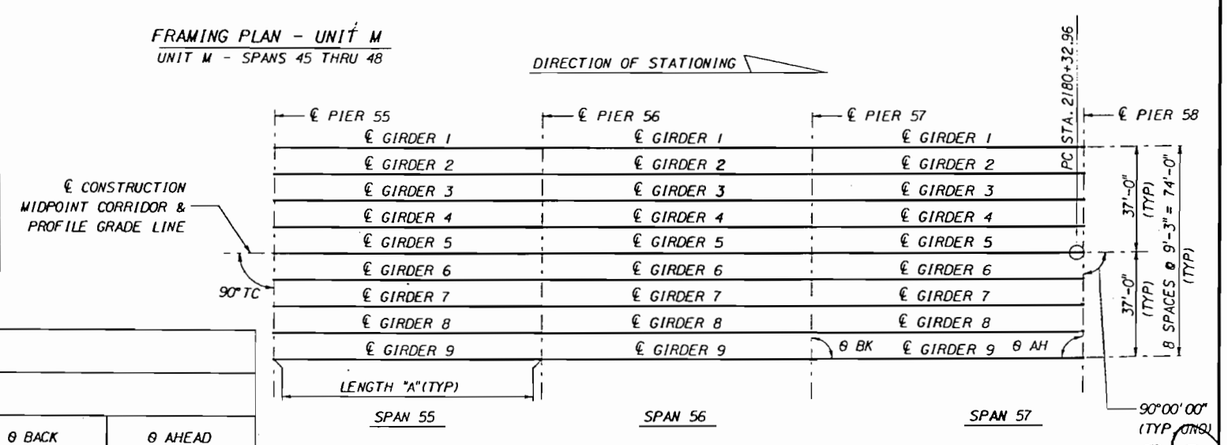

FRAMING PLAN - UNIT R
UNIT R - SPANS 55 THRU 57

UNIT R								
GDR NO.	SPANS 55 & 56			SPAN 57				
	BEAM TYPE/ STRAND PATTERN	SPAN LENGTH	LENGTH "A"	BEAM TYPE/ STRAND PATTERN	SPAN LENGTH	LENGTH "A"	θ BACK	θ AHEAD
1	IV/(42-0)	93'-11"	93'-11"	IV/(42-0)	93'-11"	93'-10 7/16"	89°59'57"	89°55'56"
2	IV/(42-0)	93'-11"	93'-11"	IV/(42-0)	93'-11"	93'-10 5/8"	89°59'57"	89°55'56"
3	IV/(42-0)	93'-11"	93'-11"	IV/(42-0)	93'-11"	93'-10 3/4"	89°59'57"	89°55'56"
4	IV/(42-0)	93'-11"	93'-11"	IV/(42-0)	93'-11"	93'-10 7/8"	89°59'57"	89°55'56"
5	IV/(45-0)	93'-11"	93'-11"	IV/(45-0)	93'-11"	93'-11"	89°59'57"	89°55'56"
6	IV/(42-0)	93'-11"	93'-11"	IV/(42-0)	93'-11"	93'-11 1/8"	89°59'57"	89°55'56"
7	IV/(42-0)	93'-11"	93'-11"	IV/(42-0)	93'-11"	93'-11 1/4"	89°59'57"	89°55'56"
8	IV/(42-0)	93'-11"	93'-11"	IV/(42-0)	93'-11"	93'-11 3/8"	89°59'57"	89°55'56"
9	IV/(42-0)	93'-11"	93'-11"	IV/(42-0)	93'-11"	93'-11 1/2"	89°59'57"	89°55'56"

TABLE OF SUBSTRUCTURE STATIONS			
ELEMENT	℄ PIER 55	℄ PIER 56	℄ PIER 57
STATION	2177+53.50	2178+47.42	2179+41.33

HDR 6 MAY 96

FINLEY McNARY/JANSSEN SPAANS
a Joint Venture

Finley McNary Engineers, Inc
1391 Timberlane Road Suite 200
Tallahassee, Florida 32312-1721

Janssen & Spaans Engineers, Inc.
2825 East 56th Street
Indianapolis, Indiana 46220

REVISIONS

DATE	BY	DESCRIPTION	DATE	BY	DESCRIPTION	DATE	BY	DESCRIPTION	DATE	BY	

	NAME	DATE
DR. BY	J.L.S.	1/96
CHK. BY	C.W.N.	1/96
SUPV.	H.D.R.	1/96

FINLEY McNARY/JANSSEN SPAANS

BOARD OF COUNTY COMMISSIONERS
LEE, COUNTY, FLORIDA
DEPARTMENT OF TRANSPORTATION

MIDPOINT BRIDGE
FRAMING PLAN (6)

42

PROJECT NO.	SHEET NO.
5896	C-81

BX1-93

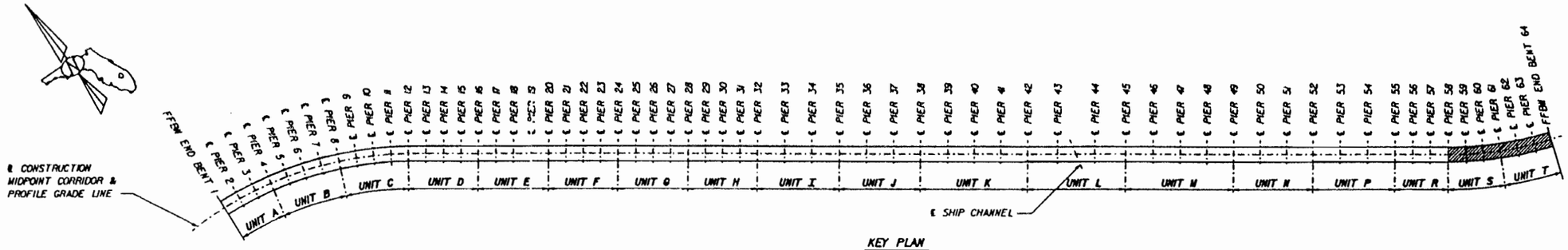

KEY PLAN

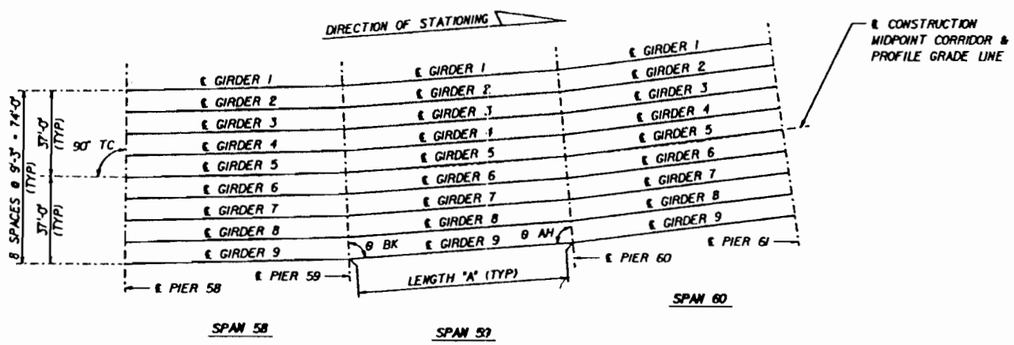

FRAMING PLAN - UNIT S
UNIT S - SPANS 58 THRU 60

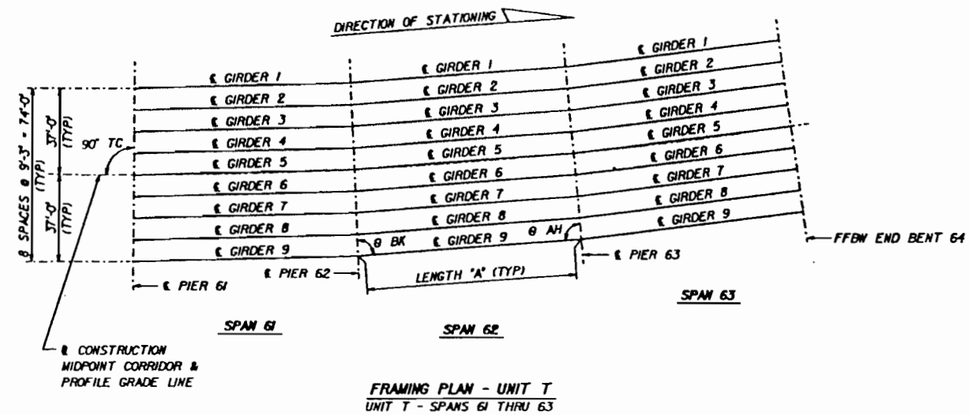

FRAMING PLAN - UNIT T
UNIT T - SPANS 61 THRU 63

NOTE:
θ (AHEAD) = 90° 00' 00" (UNO)
θ (BACK) = 90° 00' 00" (UNO)

GDR NO.	UNIT S					UNIT T				
	SPANS 58 THRU 60					SPANS 61 THRU 63				
	BEAM TYPE/ STRAND PATTERN	SPAN LENGTH	LENGTH "A"	θ BACK	θ AHEAD	BEAM TYPE/ STRAND PATTERN	SPAN LENGTH	LENGTH "A"	θ BACK	θ AHEAD
1	IV/(36-0)	93'-11"	92'-1 1/16"	88° 35' 29"	88° 35' 29"	IV/(36-0)	93'-11"	92'-1 1/16"	88° 35' 29"	88° 35' 29"
2	IV/(42-0)	93'-11"	92'-6 1/2"	88° 35' 29"	88° 35' 29"	IV/(42-0)	93'-11"	92'-6 1/2"	88° 35' 29"	88° 35' 29"
3	IV/(42-0)	93'-11"	93'-0"	88° 35' 29"	88° 35' 29"	IV/(42-0)	93'-11"	93'-0"	88° 35' 29"	88° 35' 29"
4	IV/(42-0)	93'-11"	93'-5 7/16"	88° 35' 29"	88° 35' 29"	IV/(42-0)	93'-11"	93'-5 7/16"	88° 35' 29"	88° 35' 29"
5	IV/(45-0)	93'-11"	93'-10 7/8"	88° 35' 29"	88° 35' 29"	IV/(45-0)	93'-11"	93'-10 7/8"	88° 35' 29"	88° 35' 29"
6	IV/(43-0)	93'-11"	94'-4 3/16"	88° 35' 29"	88° 35' 29"	IV/(43-0)	93'-11"	94'-4 3/16"	88° 35' 29"	88° 35' 29"
7	IV/(43-0)	93'-11"	94'-9 3/16"	88° 35' 29"	88° 35' 29"	IV/(43-0)	93'-11"	94'-9 3/16"	88° 35' 29"	88° 35' 29"
8	IV/(43-0)	93'-11"	95'-3 1/4"	88° 35' 29"	88° 35' 29"	IV/(43-0)	93'-11"	95'-3 1/4"	88° 35' 29"	88° 35' 29"
9	IV/(43-0)	93'-11"	95'-8 11/16"	88° 35' 29"	88° 35' 29"	IV/(43-0)	93'-11"	95'-8 11/16"	88° 35' 29"	88° 35' 29"

TABLE OF SUBSTRUCTURE STATIONS

ELEMENT	℄ PIER 58	℄ PIER 59	℄ PIER 60	℄ PIER 61	℄ PIER 62	℄ PIER 63	FFBW END BENT 64
STATION	2180+35.25	2181+29.17	2182+23.08	2183+17.00	2184+10.92	2185+04.83	2185+98.75

3-3-95

REVISIONS											
DATE	BY	DESCRIPTION	DATE	BY	DESCRIPTION	DATE	BY	DESCRIPTION	DATE	BY	DESCRIPTION

	NAME	DATE
DR.BY	MDD	4/93
CHK.BY	REJ	8/93
SUPV.	REJ	7/93

Greiner Greiner, Inc. Tampa, Florida

Engineers, Architects and Planners

BOARD OF COUNTY COMMISSIONERS
LEE COUNTY, FLORIDA
DEPARTMENT OF TRANSPORTATION

MIDPOINT BRIDGE
FRAMING PLAN (7)

DISK#DRAW: C25000.CADD.FG BFRP#PDT FG81

FRLEECTY

BX1-94	PROJECT NO.	SHEET NO.
	5896	C-82

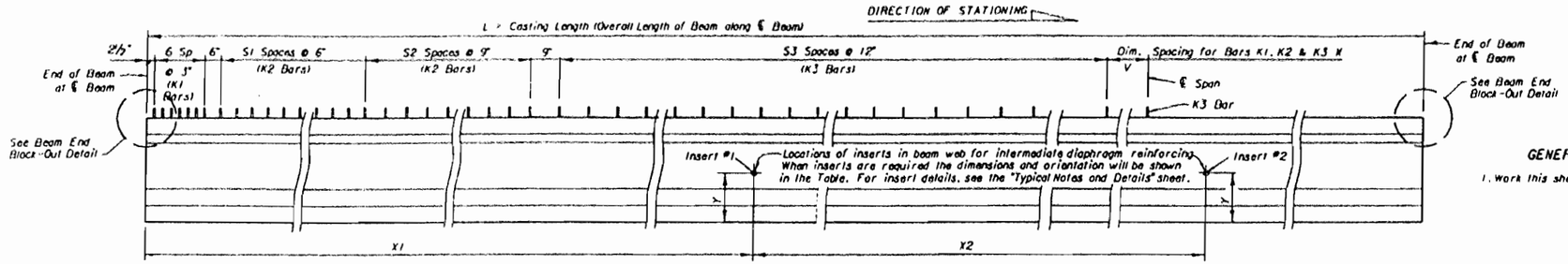

ELEVATION

NOTE: Dimension R has been included in the lengths (L) of beams to compensate for elastic and time-dependent shortening effects.

✱ Note: Spacing of Bars D, K1, K2, K3 and Z shown are Measured along centerline of beam.

GENERAL NOTES

1. Work this sheet with Sheet No. C-83.

BILL OF REINFORCING STEEL FOR ONE BEAM ONLY

MARK	SIZE	NO. REQUIRED	LENGTH (1)
A	5	8	See Table
D (3)(7)	3	28	Varies(6'-1" Min.)
K1 (3)	5	14	See Table
K2 (3)	4	102	See Table
K3 (3)	4	See Table	See Table
L (4)(5)	4	18	5'-5"
N (2)(6)	⅞"Ø Strand	4	See Table
Z (3)	5	24	5'-9"

BENDING DIAGRAMS (1)

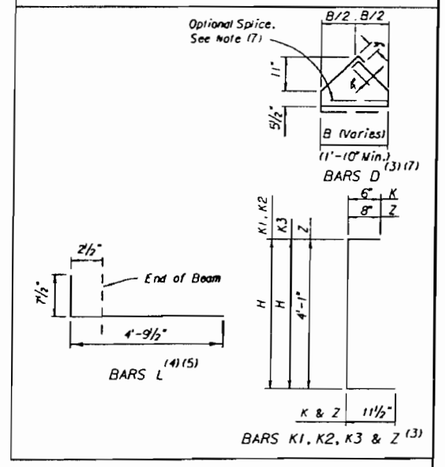

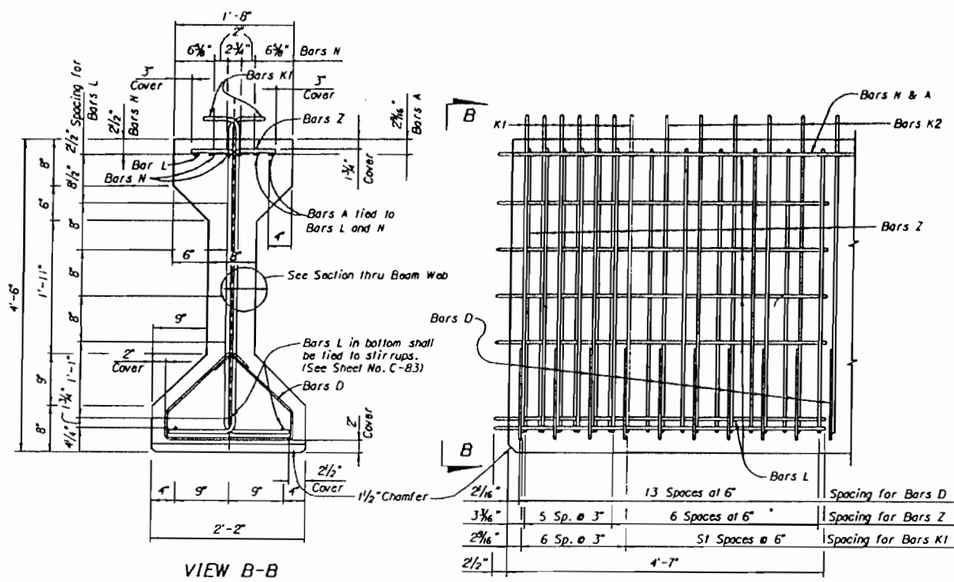

VIEW B-B

(With strands omitted, see Table for reference to strand pattern.)

NOTE: Place Bars K1 or K2 and Z one (1) each space (alternate).

DETAIL AT END OF BEAM

NOTE: Stirrups shall be placed and tied to the top of the fully bonded prestressing strands in the bottom row.

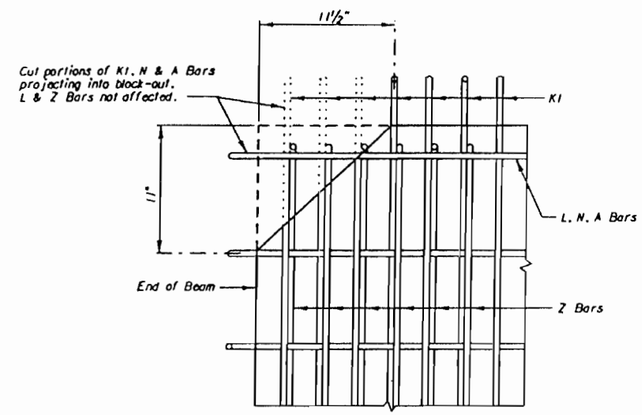

BEAM END BLOCK-OUT DETAIL

Typical Span 55, Girders 1 thru 9 Back End (shown) and Span 31, Girders 1 thru 9 Ahead End (opposite hand).

Note: Block-Out provided to accommodate post-tensioning jacks for high-level approach unit girders. Contractor shall confirm adequate fit & clearance for tensioning jacks to be used prior to casting of girders.

NOTES:

(1) All bar dimensions are out-to-out.

(2) (Not Used)

(3) Bars D, K1, K2, K3 and Z shall be bent around pins having the following diameters for respective sizes:

Bar Size	Pin Diameters
#3	1"
#4	2"
#5	2½"

(4) Bars L shall be bent prior to the beam leaving the prestressing yard. For treatment of bars L at skewed beam ends, see "Plan Ends of Beams".

(5) Caution should be used with Bars L in the ends of exterior beams to assure that the bent portion of the bar is properly oriented so that the bar will be embedded in the diaphragm concrete.

(6) Bars N shall be either ASTM A416, Grade 250 or 270, seven-wire strands ⅞" diameter or larger, stressed to 10,000 pounds each.

(7) The minimum Dimension B and length of Bars D shown apply to one-piece Bars D placed perpendicular to the centerline of the beam. Dimension B and the length of Bars D for beams with skewed ends vary with the skew (See "Plan Ends of Beams").
At the Contractor's option, Bars D may be fabricated either as a two-piece bar with a 1'-2" lap splice of the bottom legs or may be welded wire fabric, one or two-piece, provided the wire size and spacing furnishes the same steel area as No. 3 Bars.

(8) (NS) means Near Side and (FS) means Far Side, both refering to which face of the beam web is to receive the insert for the dimensioned location. (NS) and (FS) are referenced to the DIRECTION OF STATIONING shown.

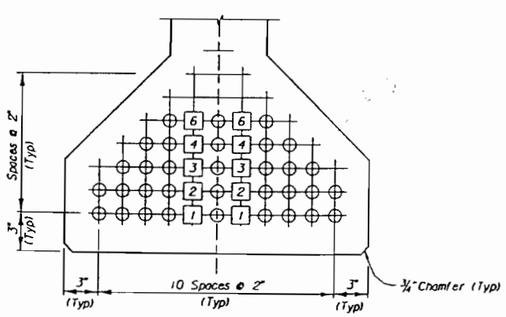

TYPE ①

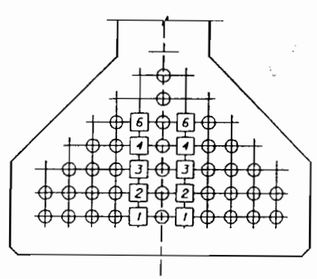

TYPE ②

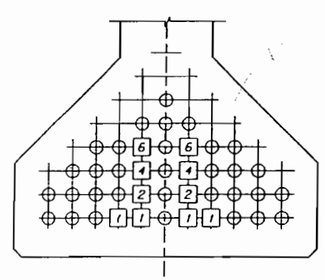

TYPE ③

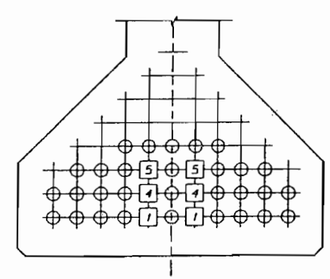

TYPE ④

STRAND PATTERNS AND DEBONDING SCHEDULE

NOTE: ○ - Indicates fully bonded strands.

- [1] - Shielded 10'-0" from each end of beam.
- [2] - Shielded 15'-0" from each end of beam.
- [3] - Shielded 20'-0" from each end of beam.
- [4] - Shielded 25'-0" from each end of beam.
- [5] - Shielded 30'-0" from each end of beam.
- [6] - Shielded 32'-0" from each end of beam.

5/11/94

REVISIONS																	
DATE	BY	DESCRIPTION	DATE	BY	DESCRIPTION	DATE	BY	DESCRIPTION	DATE	BY	DESCRIPTION		NAME	DATE
												DR.BY	KAC	3-94
												CHK.BY	MEV	3-94
												SUPV.	REJ	3-94

Greiner — Greiner, Inc. Tampa, Florida — Engineers, Architects and Planners

BOARD OF COUNTY COMMISSIONERS
LEE COUNTY, FLORIDA
DEPARTMENT OF TRANSPORTATION

MIDPOINT BRIDGE
AASHTO TYPE IV BEAMS
TYPICAL BEAM & STRAND PATTERN

FALEECTY

PROJECT NO.	SHEET NO.
5896	C-83

BX1-95

C:\BRIDGES\PROJECTS\C26\000\BGRDWPOLDGN

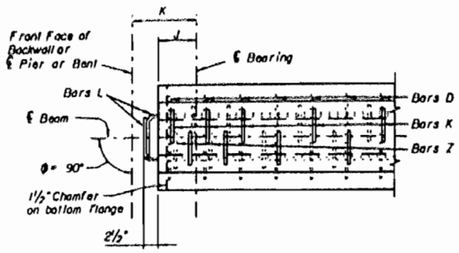

CASE 1

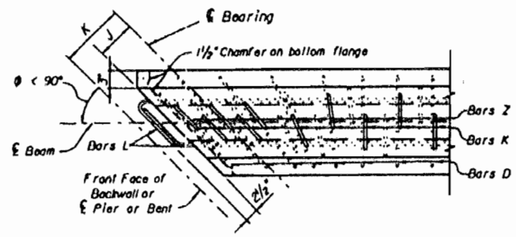

CASE 2
(See Note)

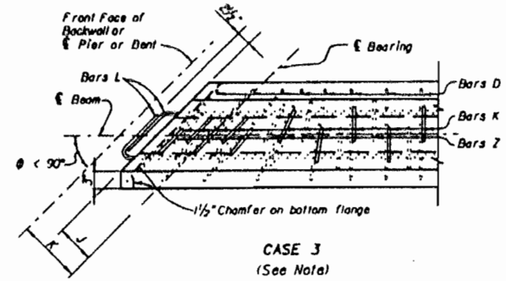

CASE 3
(See Note)

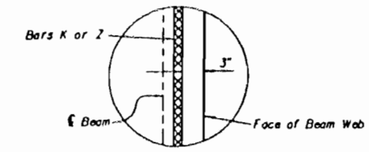

SECTION THRU BEAM WEB
(Showing Cover on Stirrups)

PLAN ENDS OF BEAMS

Note: For both Plan Views Case 2 and Case 3, the first Bar Z and the first two Bars K shall be placed parallel to the skewed end of the Beam. The remainder of the Bars Z & K shall be placed so as to transition from an axis parallel to the skewed end to an axis perpendicular to the centerline of the beam. Bars D in the bottom flange shall be rotated along with Bars Z & K. Bar spacing may be adjusted to miss welded studs for bearing plates. See also "End Elevations of Beams", this sheet.

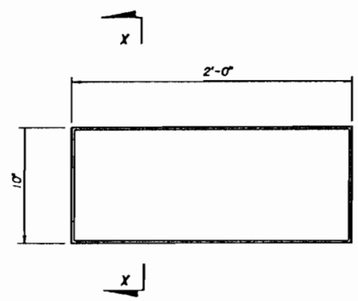

PLAN - COMPOSITE NEOPRENE PADS
(720 REQUIRED)

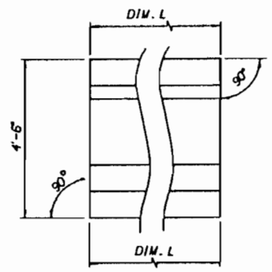

CONDITION 1
(P = 0'-0")

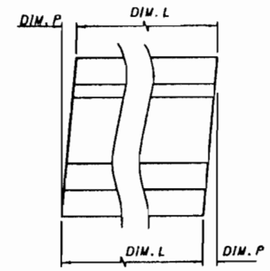

CONDITION 2

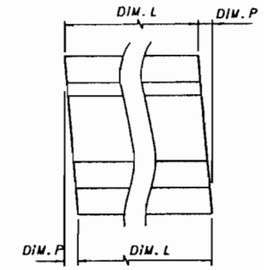

CONDITION 3

END ELEVATIONS OF BEAMS
(Showing Vertical Bevel of Beam End)

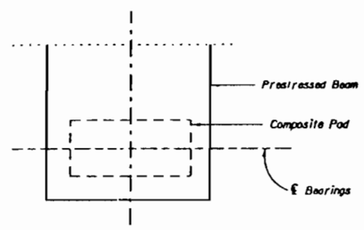

STRAIGHT BRIDGE

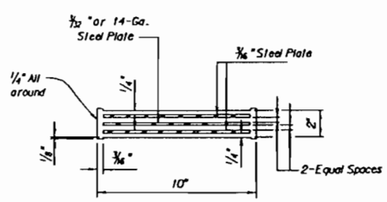

SECTION X-X

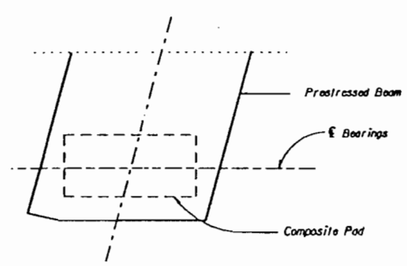

SKEWED BRIDGE

PART PLAN

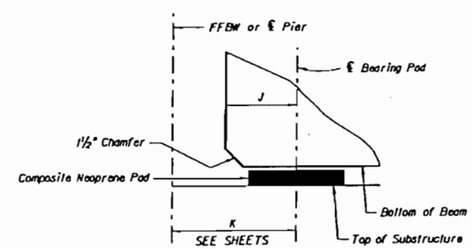

SIDE ELEVATION - SECTION OF BEARING ASSEMBLY
(Perpendicular to ℄ Bearing)

BEAM NOTES

MORTAR LEAKAGE: Any mortar leakage that occurs and stains resulting from leakage shall be removed so that beams have a uniform appearance.

STRANDS: At the option of the Contractor, other types, sizes and/or configurations of strands may be used in lieu of the stranding shown on these sheets. Calculations shall be submitted showing the substitution meets the following requirements:

1. The strands meet all the requirements of ASTM-A416 for the grade of strands proposed.
2. The net compressive stress in the concrete due to prestressing acting alone, after all losses, is at least as large as that provided by the stranding shown on these sheets.
3. The ultimate strength of the structure with the proposed stranding is at least equal to the ultimate strength of the original design.
4. The proposed stranding complies in all respects with the Department's Structures Design Guidelines.

FINISH: The top surface of the beam shall be rough floated and then scrubbed transversely with a coarse wire brush to remove all laitance and to produce a roughened surface for bonding. All beams shall receive a Class 3 surface finish.

SUBMITTALS: The Specifications stipulate the conditions for which Shop Drawings are not required. If each and every condition can not be met, then a formal Shop Drawing submittal is required. Supplemental reinforcing provided by the Contractor to facilitate fabrication of prestressed beams do not require Shop Drawings.

STRAND DETENSIONING: Strand detensioning shall be based upon the following priority, from first to last:

1. Top dormant strands (Bars N)
2. Fully bonded strands
3. Partially debonded (shielded) strands

FORMS AND PALLETS: All beams shall be cast on concrete based pallets and in metal forms.

HANDLING: In the handling of beams, they must be maintained in an upright position at all times and must be picked up from points located a maximum distance of 3 ft. from the ends of the beam.

STORAGE AND TRANSPORTATION: Beams shall be stored on adequate dunnage and supported during transit within 18" from ends of beam.

STRAND EXTENSION: All strands shall extend 2½" beyond ends of beams.

CONCRETE: Refer to Table of Beam Variables for the class of concrete, 28-day strength (f'c) and cylinder strength at transfer of the tensioning load (f'ci).

REINFORCING STEEL: All reinforcing steel shall be Grade 60.

BEARING PADS: The composite neoprene bearing pads shall be furnished and installed by the Contractor.

BEARING PAD NOTES

Neoprene in all Bearing Pads shall have a Grade 50 durometer hardness.

Steel Plates in composite pads shall conform to AASHTO Specifications M-251.

Variations in pad dimensions will be allowed provided revised pads will meet the current specifications and are approved by the Engineer.

NOTES: Work this sheet with individual beam sheets.

See "TABLE OF BEAM VARIABLES" on individual beam sheets for angle "θ"s and dimensions "J", "K", "L" and "P".

For beams with vertically bevelled ends, such as conditions 2 & 3, the first Bar K shall be placed parallel to the end bevel. Adjacent Bars Z and K shall be placed so as to transition from an axis parallel to the end bevel to a vertical axis. The spacing of Bars K and Z shown shall apply along the top flange of the beam and the spacing along the bottom of the beam shall be adjusted by not more than ½ inch (±) until the vertical position is attained.

3-3-95

REVISIONS											
DATE	BY	DESCRIPTION	DATE	BY	DESCRIPTION	DATE	BY	DESCRIPTION	DATE	BY	DESCRIPTION

	NAME	DATE
DR.BY	KAC	3-94
CHK.BY	REJ	3-94
SUPV.	REJ	3-94

Greiner
Greiner Inc.
Tampa Florida

Engineers, Architects and Planners

BOARD OF COUNTY COMMISSIONERS
LEE COUNTY, FLORIDA
DEPARTMENT OF TRANSPORTATION

MIDPOINT BRIDGE
TYPICAL NOTES AND DETAILS FOR
AASHTO TYPE IV PRESTRESSED BEAMS

FALEECTY

PROJECT NO.	SHEET
5898	C-84

BX1-96

TABLE OF BEAM VARIABLES

SPAN NO.	BEAM ID.	CONCRETE PROPERTIES: * CLASS	STRENGTHS: REL. (f'ci)	STRENGTHS: 28-DAY (f'c)	STND PTRN TYPE	PLAN VIEW CASE (BK)	PLAN VIEW CASE (AH)	END ELEV COND	ANGLE θ (LW)	ANGLE θ (AH)	DIM P	DIM J (BK)	DIM J (AH)	DIM K (BK)	DIM K (AH)	BEAM DIM L	BEAM DIM R	S1	S2	S3	STIRRUP DIM V	N LENGTH	A LENGTH	K1, K2 N	K1, K2 LENGTH	K3 N	K3 LENGTH	K3 NO. REQ'D.	BUILDUP BEGIN SPAN	BUILDUP ℄ SPAN	BUILDUP END SPAN	DEAD LOAD DEFLECTION DURING POUR (DIM. A)	BEAM CAMBER
1	1	VS	4600	6000	1	2	3	1	88° 35' 29"		0	7 1/2"	8 1/2"	1'-2"	1'-1"	94'-10"	3/8"	44	6	17	11 1/2"	95'-3"	15'-0"	4'-10	6'-4"	4'-9 1/4"	6'-3"	37	4 5/16"	9/16"	4 5/16"	13/16"	4 7/8"
	2	VS	4600	6000	1	2	3	1	88° 35' 29"		0	7 1/2"	8 1/2"	1'-2"	1'-1"	94'-4 1/2"	3/8"	44	6	17	8 3/4"	94'-9 1/2"	15'-0"	4'-10	6'-4"	4'-9 1/4"	6'-3"	37	4 1/4"	9/16"	4 1/4"	1/2"	4 7/8"
	3	IV	4600	5500	1	2	3	1	88° 35' 29"		0	7 1/2"	8 1/2"	1'-2"	1'-1"	93'-11 1/4"	3/8"	44	6	17	6 1/8"	94'-4 1/4"	15'-0"	4'-10	6'-4"	4'-9 1/4"	6'-3"	36	4 3/8"	9/16"	4 3/8"	1/2"	5
	4	IV	4600	5500	1	2	3	1	88° 35' 29"		0	7 1/2"	8 1/2"	1'-2"	1'-1"	93'-5 3/4"	3/8"	44	6	17	3 3/4"	93'-10 3/4"	15'-0"	4'-10"	6'-4"	4'-9 1/4"	6'-3"	36	4 3/8"	9/16"	4 3/8"	11/16"	4 15/16"
	5	VS	4800	6000	2	2	3	1	88° 35' 29"		0	7 1/2"	8 1/2"	1'-2"	1'-1"	93'-0 1/4"	3/8"	44	6	16	1'-0 3/4"	93'-5 1/4"	15'-0"	4'-10	6'-4"	4'-9 1/4"	6'-3"	35	4 1/2"	9/16"	4 1/2"	11/16"	5
	6	IV	4500	5500	3	2	3	1	88° 35' 29"		0	7 1/2"	8 1/2"	1'-2"	1'-1"	92'-6 3/4"	3/8"	44	6	16	9 1/8"	92'-11 3/4"	15'-0"	4'-10"	6'-4"	4'-9 1/4"	6'-3"	35	4 1/4"	9/16"	4 1/4"	11/16"	4 3/4"
	7	IV	4500	5500	3	2	3	1	88° 35' 29"		0	7 1/2"	8 1/2"	1'-2"	1'-1"	92'-1 1/4"	3/8"	44	6	16	7 1/8"	92'-6 1/4"	15'-0"	4'-10"	6'-4"	4'-9 1/4"	6'-3"	34	4 1/4"	9/16"	4 1/4"	1 1/8"	4 3/4"
	8	IV	4500	5500	3	2	3	1	88° 35' 29"		0	7 1/2"	8 1/2"	1'-2"	1'-1"	91'-7 3/4"	3/8"	44	6	16	4 3/8"	92'-0 3/4"	15'-0"	4'-10"	6'-4"	4'-9 1/4"	6'-3"	34	4 1/4"	9/16"	4 1/4"	1 1/8"	4 3/4"
	9	IV	4300	5500	4	2	3	1	88° 35' 29"		0	7 1/2"	8 1/2"	1'-2"	1'-1"	91'-2 1/2"	3/8"	44	6	15	1'-1 3/4"	92'-7 1/2"	15'-0"	4'-9 1/2"	6'-3"	4'-9 1/4"	6'-3"	33	3 11/16"	9/16"	3 11/16"	1 1/8"	3 15/16"
2, 5, 6, 9, & 10	1	VS	4600	6000	1	2	3	1	88° 35' 29"		0	8 1/2"	8 1/2"	1'-1"	1'-1"	95'-0"	3/8"	44	6	17	1'-0 1/2"	95'-5"	15'-0"	4'-10"	6'-4"	4'-9 1/4"	6'-3"	37	4 5/16"	9/16"	4 5/16"	13/16"	4 7/8"
	2	VS	4600	6000	1	2	3	1	88° 35' 29"		0	8 1/2"	8 1/2"	1'-1"	1'-1"	94'-8 1/2"	3/8"	44	6	17	9 3/4"	94'-11 1/2"	15'-0"	4'-10"	6'-4"	4'-9 1/4"	6'-3"	37	4 1/4"	9/16"	4 1/4"	1/2"	4 7/8"
	3	IV	4600	5500	1	2	3	1	88° 35' 29"		0	8 1/2"	8 1/2"	1'-1"	1'-1"	94'-1 1/4"	3/8"	44	6	17	7 1/8"	94'-6 1/4"	15'-0"	4'-10"	6'-4"	4'-9 1/4"	6'-3"	36	4 3/8"	9/16"	4 3/8"	1/2"	5
	4	IV	4600	5500	1	2	3	1	88° 35' 29"		0	8 1/2"	8 1/2"	1'-1"	1'-1"	93'-7 3/4"	3/8"	44	6	17	4 3/8"	94'-0 3/4"	15'-0"	4'-10"	6'-4"	4'-9 1/4"	6'-3"	36	4 3/8"	9/16"	4 3/8"	11/16"	4 15/16"
	5	VS	4800	6000	2	2	3	1	88° 35' 29"		0	8 1/2"	8 1/2"	1'-1"	1'-1"	93'-2 1/4"	3/8"	44	6	16	1'-1 3/8"	93'-7 1/4"	15'-0"	4'-10"	6'-4"	4'-9 1/4"	6'-3"	35	4 1/2"	9/16"	4 1/2"	11/16"	5
	6	IV	4500	5500	3	2	3	1	88° 35' 29"		0	8 1/2"	8 1/2"	1'-1"	1'-1"	92'-8 3/4"	3/8"	44	6	16	10 1/8"	93'-1 3/4"	15'-0"	4'-10"	6'-4"	4'-9 1/4"	6'-3"	35	4 1/4"	9/16"	4 1/4"	11/16"	4 3/4"
	7	IV	4500	5500	3	2	3	1	88° 35' 29"		0	8 1/2"	8 1/2"	1'-1"	1'-1"	92'-3 1/4"	3/8"	44	6	16	8 1/8"	92'-8 1/4"	15'-0"	4'-10"	6'-4"	4'-9 1/4"	6'-3"	35	4 1/4"	9/16"	4 1/4"	1 1/8"	4 3/4"
	8	IV	4500	5500	3	2	3	1	88° 35' 29"		0	8 1/2"	8 1/2"	1'-1"	1'-1"	91'-9 3/4"	3/8"	44	6	16	5 3/8"	92'-2 3/4"	15'-0"	4'-10"	6'-4"	4'-9 1/4"	6'-3"	34	4 1/4"	9/16"	4 1/4"	1 1/8"	4 3/4"
	9	IV	4300	5500	4	2	3	1	88° 35' 29"		0	8 1/2"	8 1/2"	1'-1"	1'-1"	91'-4 1/2"	3/8"	44	6	15	1'-2 3/4"	91'-9 1/2"	15'-0"	4'-9 1/2"	6'-3"	4'-9 1/4"	6'-3"	33	3 11/16"	9/16"	3 11/16"	1 1/8"	3 15/16"
4, 8	1	VS	4600	6000	1	2	3	1	88° 35' 29"		0	7 1/4"	8 1/2"	1'-1"	1'-1"	94'-10 3/4"	3/8"	44	6	17	11 1/8"	95'-3 3/4"	15'-0"	4'-10"	6'-4"	4'-9 1/4"	6'-3"	37	4 5/16"	9/16"	4 5/16"	13/16"	4 7/8"
	2	VS	4600	6000	1	2	3	1	88° 35' 29"		0	7 1/4"	8 1/2"	1'-1"	1'-1"	94'-5 1/4"	3/8"	44	6	17	9 1/8"	94'-10 1/4"	15'-0"	4'-10"	6'-4"	4'-9 1/4"	6'-3"	37	4 1/4"	9/16"	4 1/4"	1/2"	4 7/8"
	3	IV	4600	5500	1	2	3	1	88° 35' 29"		0	7 1/4"	8 1/2"	1'-1"	1'-1"	94'-0"	3/8"	44	6	17	6 1/2"	94'-5"	15'-0"	4'-10"	6'-4"	4'-9 1/4"	6'-3"	36	4 3/8"	9/16"	4 3/8"	1/2"	5
	4	IV	4600	5500	1	2	3	1	88° 35' 29"		0	7 1/4"	8 1/2"	1'-1"	1'-1"	93'-6 1/2"	3/8"	44	6	17	3 3/4"	93'-11 1/2"	15'-0"	4'-10"	6'-4"	4'-9 1/4"	6'-3"	36	4 3/8"	9/16"	4 3/8"	11/16"	4 15/16"
	5	VS	4800	6000	2	2	3	1	88° 35' 29"		0	7 1/4"	8 1/2"	1'-1"	1'-1"	93'-1"	3/8"	44	6	16	1'-1"	92'-6"	15'-0"	4'-10"	6'-4"	4'-9 1/4"	6'-3"	35	4 1/2"	9/16"	4 1/2"	11/16"	5
	6	IV	4500	5500	3	2	3	1	88° 35' 29"		0	7 1/4"	8 1/2"	1'-1"	1'-1"	92'-7 1/2"	3/8"	44	6	16	10 1/4"	93'-0 1/2"	15'-0"	4'-10"	6'-4"	4'-9 1/4"	6'-3"	35	4 1/4"	9/16"	4 1/4"	11/16"	4 3/4"
	7	IV	4500	5500	3	2	3	1	88° 35' 29"		0	7 1/4"	8 1/2"	1'-1"	1'-1"	92'-2"	3/8"	44	6	16	7 1/2"	92'-7"	15'-0"	4'-10"	6'-4"	4'-9 1/4"	6'-3"	34	4 1/4"	9/16"	4 1/4"	1 1/8"	4 3/4"
	8	IV	4500	5500	3	2	3	1	88° 35' 29"		0	7 1/4"	8 1/2"	1'-1"	1'-1"	91'-8 1/2"	3/8"	44	6	16	4 3/4"	92'-1 1/2"	15'-0"	4'-10"	6'-4"	4'-9 1/4"	6'-3"	34	4 1/4"	9/16"	4 1/4"	1 1/8"	4 3/4"
	9	IV	4300	5500	4	2	3	1	88° 35' 29"		0	7 1/4	8 1/2"	1'-1"	1'-1"	91'-3 1/4"	3/8"	44	6	15	1'-2 1/8"	91'-8 1/4"	15'-0"	4'-9 1/2"	6'-3"	4'-9 1/4"	6'-3"	33	3 11/16"	9/16"	3 11/16"	1 1/8"	3 15/16"
3, 7	1	VS	4600	6000	1	2	3	1	88° 35' 29"		0	8 1/2"	7 1/4"	1'-1"	1'-1"	94'-10 3/4"	3/8"	44	6	17	11 1/8"	95'-3 3/4"	15'-0"	4'-10"	6'-4"	4'-9 1/4"	6'-3"	37	4 5/16"	9/16"	4 5/16"	13/16"	4 7/8"
	2	VS	4600	6000	1	2	3	1	88° 35' 29"		0	8 1/2"	7 1/4"	1'-1"	1'-1"	94'-5 1/4"	3/8"	44	6	17	9 1/8"	94'-10 1/4"	15'-0"	4'-10"	6'-4"	4'-9 1/4"	6'-3"	37	4 1/4"	9/16"	4 1/4"	1/2"	4 7/8"
	3	IV	4600	5500	1	2	3	1	88° 35' 29"		0	8 1/2"	7 1/4"	1'-1"	1'-1"	94'-0"	3/8"	44	6	17	6 1/2"	94'-5"	15'-0"	4'-10"	6'-4"	4'-9 1/4"	6'-3"	36	4 3/8"	9/16"	4 3/8"	1/2"	5
	4	IV	4600	5500	1	2	3	1	88° 35' 29"		0	8 1/2"	7 1/4"	1'-1"	1'-1"	93'-6 1/2"	3/8"	44	6	17	3 3/4"	93'-11 1/2"	15'-0"	4'-10"	6'-4"	4'-9 1/4"	6'-3"	36	4 3/8"	9/16"	4 3/8"	11/16"	4 15/16"
	5	VS	4800	6000	2	2	3	1	88° 35' 29"		0	8 1/2"	7 1/4"	1'-1"	1'-1"	93'-1"	3/8"	44	6	16	1'-1"	93'-6"	15'-0"	4'-10"	6'-4"	4'-9 1/4"	6'-3"	35	4 1/2"	9/16"	4 1/2"	11/16"	5
	6	IV	4500	5500	3	2	3	1	88° 35' 29"		0	8 1/2"	7 1/4"	1'-1"	1'-1"	92'-7 1/2"	3/8"	44	6	16	10 1/4"	93'-0 1/2"	15'-0"	4'-10"	6'-4"	4'-9 1/4"	6'-3"	35	4 1/4"	9/16"	4 1/4"	11/16"	4 3/4"
	7	IV	4500	5500	3	2	3	1	88° 35' 29"		0	8 1/2"	7 1/4"	1'-1"	1'-1"	92'-2"	3/8"	44	6	16	7 1/2"	92'-7"	15'-0"	4'-10"	6'-4"	4'-9 1/4"	6'-3"	34	4 1/4"	9/16"	4 1/4"	1 1/8"	4 3/4"
	8	IV	4500	5500	3	2	3	1	88° 35' 29"		0	8 1/2"	7 1/4"	1'-1"	1'-1"	91'-8 1/2"	3/8"	44	6	16	4 3/4"	92'-1 1/2"	15'-0"	4'-10"	6'-4"	4'-9 1/4"	6'-3"	34	4 1/4"	9/16"	4 1/4"	1 1/8"	4 3/4"
	9	IV	4300	5500	4	2	3	1	88° 35' 29"		0	8 1/2"	7 1/4"	1'-1"	1'-1"	91'-3 1/4"	3/8"	44	6	15	1'-2 1/8"	91'-8 1/4"	15'-0"	4'-9 1/2"	6'-3"	4'-9 1/4"	6'-3"	33	3 11/16"	9/16"	3 11/16"	1 1/8"	3 15/16"
11	1	VS	4600	6000	1	2	3	3	88° 35' 29"		1/4"	8 1/2"	7 1/4"	1'-1"	1'-1"	94'-10 3/4"	3/8"	44	6	17	11 1/8"	95'-3 3/4"	15'-0"	4'-9 1/2"	6'-3	4'-9 1/4"	6'-3"	37	1 7/8"	9/16"	1 3/4"	13/16"	4 7/8"
	2	VS	4600	6000	1	2	3	3	88° 35' 29"		1/4"	8 1/2"	7 1/4"	1'-1"	1'-1"	94'-5 1/4"	3/8"	44	6	17	9 1/8"	94'-10 1/4"	15'-0"	4'-9 1/2"	6'-3	4'-9 1/4"	6'-3"	37	2 3/16"	9/16"	2 1/8"	1/2"	4 7/8"
	3	IV	4600	5500	1	2	3	3	88° 35' 29"		3/16"	8 1/2"	7 1/4"	1'-1"	1'-1"	94'-0"	3/8"	44	6	17	6 1/2"	94'-5"	15'-0"	4'-9 1/2"	6'-3	4'-9 1/4"	6'-3"	36	2 1/4"	9/16"	2 3/8"	1/2"	5
	4	IV	4600	5500	1	2	3	3	88° 35' 29"		1/8"	8 1/2"	7 1/4"	1'-1"	1'-1"	93'-6 1/2"	3/8"	44	6	17	3 3/4"	93'-11 1/2"	15'-0"	4'-9 1/2"	6'-3	4'-9 1/4"	6'-3"	36	3 1/8"	9/16"	3 7/16"	11/16"	4 15/16"
	5	VS	4800	6000	2	2	3	3	88° 35' 29"		1/8"	8 1/2"	7 1/4"	1'-1"	1'-1"	93'-1"	3/8"	44	6	16	1'-1"	93'-6"	15'-0"	4'-9 1/2"	6'-3	4'-9 1/4"	6'-3"	35	3 11/16"	9/16"	3 3/8"	11/16"	5
	6	IV	4500	5500	3	2	3	3	88° 35' 29"		1/16"	8 1/2"	7 1/4"	1'-1"	1'-1"	92'-7 1/2"	3/8"	44	6	16	10 1/4"	93'-0 1/2"	15'-0"	4'-9 1/2"	6'-3	4'-9 1/4"	6'-3"	35	3 7/8"	9/16"	3 3/4"	11/16"	4 3/4"
	7	IV	4500	5500	3	2	3	1	88° 35' 29"		0	8 1/2"	7 1/4"	1'-1"	1'-1"	92'-2"	3/8"	44	6	16	7 1/2"	92'-7"	15'-0"	4'-10 1/4"	6'-4"	4'-9 1/4"	6'-3"	34	4 5/16"	9/16"	4 5/16"	1 1/8"	4 3/4"
	8	IV	4500	5500	3	2	3	2	88° 35' 29"		1/16"	8 1/2"	7 1/4"	1'-1"	1'-1"	91'-8 1/2"	3/8"	44	6	16	4 3/4"	92'-1 1/2"	15'-0"	4'-10 1/4"	6'-4"	4'-9 1/4"	6'-3"	34	4 3/4"	9/16"	4 5/8"	1 1/8"	4 3/4"
	9	IV	4300	5500	4	2	3	2	88° 35' 29"		1/8"	8 1/2"	7 1/4"	1'-1"	1'-1"	91'-3 1/4"	3/8"	44	6	15	1'-2 1/8"	91'-8 1/4"	15'-0"	4'-10 1/4"	6'-4"	4'-9 1/4"	6'-3"	33	4 5/16"	9/16"	4 7/16"	1 1/8"	3 15/16"
12	1	IV	4500	5500	3	2	3	3	89° 3' 27"	89° 44' 27"	1/2"	7 1/4"	8 1/2"	1'-1"	1'-1"	93'-10 1/4"	3/8"	44	6	17	5 3/8"	94'-3 1/4"	15'-0"	4'-9 1/2"	6'-3"	4'-9"	6'-3'	36	3 7/8"	7/16"	3 11/16"	1/2"	4 13/16"
	2	VS	4500	6000	3	2	3	3	89° 3' 24"	89° 44' 30"	7/16"	7 1/4"	8 1/2"	1'-1"	1'-1"	93'-8"	3/8"	44	6	17	4 1/2"	94'-1"	15'-0"	4'-9 1/4"	6'-3"	4'-9"	6'-3'	36	3 11/16"	7/16"	3 9/16"	1/2"	4 11/16"
	3	VS	4500	6000	3	2	3	3	89° 3' 22"	89° 44' 33"	5/16"	7 1/4"	8 1/2"	1'-1"	1'-1"	93'-5 3/4"	3/8"	44	6	17	3 3/8"	93'-10 3/4"	15'-0"	4'-9 1/4"	6'-3"	4'-9"	6'-3'	36	3 3/4"	7/16"	3 9/16"	11/16"	4 11/16"
	4	IV	4500	5500	3	2	3	3	89° 3' 19"	89° 44' 35"	1/4"	7 1/4"	8 1/2"	1'-1"	1'-1"	93'-3 1/2"	3/8"	44	6	16	1'-2 1/4"	93'-8 1/2"	15'-0"	4'-9 1/4"	6'-3"	4'-9"	6'-3'	35	3 13/16"	7/16"	3 11/16"	11/16"	4 13/16"
	5	VS	4800	6000	2	2	3	3	89° 3' 17"	89° 44' 38"	3/16"	7 1/4"	8 1/2"	1'-1"	1'-1"	93'-1"	3/8"	44	6	16	1'-1"	93'-6"	15'-0"	4'-9 1/2"	6'-3"	4'-9"	6'-3'	35	4 1/8"	7/16"	3 15/16"	11/16"	5
	6	IV	4500	5500	3	2	3	3	89° 3' 14"	89° 44' 40"	1/16"	7 1/4"	8 1/2"	1'-1"	1'-1"	92'-10 3/4"	3/8"	44	6	16	11 1/8"	93'-3 3/4"	15'-0"	4'-9 1/2"	6'-3"	4'-9"	6'-3'	35	3 7/8"	7/16"	3 11/16"	11/16"	4 13/16"
	7	IV	4500	5500	3	2	3	1	89° 3' 12"	89° 44' 43"	0"	7 1/4"	8 1/2"	1'-1"	1'-1"	92'-8 1/2"	3/8"	44	6	16	10 3/4"	93'-1 1/2"	15'-0"	4'-9 1/2"	6'-3"	4'-9"	6'-3'	35	3 7/8"	7/16"	3 11/16"	11/16"	4 3/4"
	8	IV	4500	5500	3	2	3	2	89° 3' 9"	89° 44' 45"	1/16"	7 1/4"	8 1/2"	1'-1"	1'-1"	92'-6"	3/8"	44	6	16	9 1/2"	92'-11"	15'-0"	4'-9 1/2"	6'-3"	4'-9"	6'-3'	35	3 7/8"	7/16"	3 11/16"	11/16"	4 3/4"
	9	IV	4500	5500	3	2	3	2	89° 3' 6"	89° 44' 48"	3/16"	7 1/4"	8 1/2"	1'-1"	1'-1"	92'-3 3/4"	3/8"	44	6	16	8 3/8"	92'-8 3/4"	15'-0"	4'-9 1/2"	6'-3"	4'-9"	6'-3'	35	3 15/16"	7/16"	3 3/4"	1 1/8"	4 3/4"
13	1	IV	4500	5500	3	1	1	3	90° 00' 00"		1/2"	8 1/2"	8 1/2"	1'-1"	1'-1"	93'-2 3/8"	3/8"	44	6	16	1'-1 5/8"	93'-7 3/8"	15'-0"	4'-9 1/4"	6'-3"	4'-9"	6'-3"	35	3 3/4"	1/4"	3 9/16"	11/16"	4 13/16"
	2	IV	4500	5500	3	1	1	3	90° 00' 00"		7/16"	8 1/2"	8 1/2"	1'-1"	1'-1"	93'-2 3/8"	3/8"	44	6	16	1'-1 5/8"	93'-7 3/8"	15'-0"	4'-9"	6'-3"	4'-9"	6'-3"	35	3 9/16"	1/4"	3 7/16"	11/16"	4 13/16"
	3	IV	4500	5500	3	1	1	3	90° 00' 00"		5/16"	8 1/2"	8 1/2"	1'-1"	1'-1"	93'-2 3/8"	3/8"	44	6	16	1'-1 5/8"	93'-7 3/8"	15'-0"	4'-9"	6'-3"	4'-9"	6'-3"	35	3 9/16"	1/4"	3 7/16"	11/16"	4 13/16"
	4	IV	4500	5500	3	1	1	3	90° 00' 00"		1/4"	8 1/2"	8 1/2"	1'-1"	1'-1"	93'-2 3/8"	3/8"	44	6	16	1'-1 5/8"	93'-7 3/8"	15'-0"	4'-9"	6'-3"	4'-9"	6'-3"	35	3 9/16"	1/4"	3 7/16"	11/16"	4 13/16"
	5	VS	4800	6000	2	1	1	3	90° 00' 00"		3/16"	8 1/2"	8 1/2"	1'-1"	1'-1"	93'-2 3/8"	3/8"	44	6	16	1'-1 5/8"	93'-7 3/8"	15'-0"	4'-9 1/4"	6'-3"	4'-9"	6'-3"	35	3 13/16"	1/4"	3 11/16"	11/16"	5
	6	IV	4500	5500	3	1	1	3	90° 00' 00"		1/16"	8 1/2"	8 1/2"	1'-1"	1'-1"	93'-2 3/8"	3/8"	44	6	16	1'-1 5/8"	93'-7 3/8"	15'-0"	4'-9"	6'-3"	4'-9"	6'-3"	35	3 3/8"	1/4"	3 1/4"	11/16"	4 13/16"
	7	IV	4500	5500	3	1	1	1	90° 00' 00"		0"	8 1/2"	8 1/2"	1'-1"	1'-1"	93'-2 3/8"	3/8"	44	6	16	1'-1 5/8"	93'-7 3/8"	15'-0"	4'-9"	6'-3"	4'-9"	6'-3"	35	3 1/4"	1/4"	3 1/8"	11/16"	4 13/16"
	8	IV	4500	5500	3	1	1	2	90° 00' 00"		1/16"	8 1/2"	8 1/2"	1'-1"	1'-1"	93'-2 3/8"	3/8"	44	6	16	1'-1 5/8"	93'-7 3/8"	15'-0"	4'-9"	6'-3"	4'-9"	6'-3"	35	3 1/16"	1/4"	2 15/16"	11/16"	4 13/16"
	9	IV	4500	5500	3	1	1	2	90° 00' 00"		1/8"	8 1/2"	8 1/2"	1'-1"	1'-1"	93'-2 3/8"	3/8"	44	6	16	1'-1 5/8"	93'-7 3/8"	15'-0"	4'-9"	6'-3"	4'-9"	6'-3"	35	3 1/16"	1/4"	2 15/16"	11/16"	4 13/16"
14	1	IV	4500	5500	3	1	1	3	90° 00' 00"		1/2"	8 1/2"	8 1/2"	1'-1"	1'-1"	93'-2 3/8"	3/8"	44	6	16	1'-1 5/8"	93'-7 3/8"	15'-0"	4'-9 1/4"	6'-3"	4'-8 3/4"	6'-3"	35	3 9/16"	1/16"	3 7/16"	11/16"	4 13/16"
	2	IV	4500	5500	3	1	1	3	90° 00' 00"		7/16"	8 1/2"	8 1/2"	1'-1"	1'-1"	93'-2 3/8"	3/8"	44	6	16	1'-1 5/8"	93'-7 3/8"	15'-0"	4'-9	6'-3"	4'-8 3/4"	6'-3"	35	3 7/16"	1/16"	3 1/4"	11/16"	4 13/16"
	3	IV	4500	5500	3	1	1	3	90° 00' 00"		5/16"	8 1/2"	8 1/2"	1'-1"	1'-1"	93'-2 3/8"	3/8"	44	6	16	1'-1 5/8"	93'-7 3/8"	15'-0"	4'-9	6'-3"	4'-8 3/4"	6'-3"	35	3 7/16"	1/16"	3 1/4"	11/16"	4 13/16"
	4	IV	4500	5500	3	1	1	3	90° 00' 00"		1/4"	8 1/2"	8 1/2"	1'-1"	1'-1"	93'-2 3/8"	3/8"	44	6	16	1'-1 5/8"	93'-7 3/8"	15'-0"	4'-9	6'-3"	4'-8 3/4"	6'-3"	35	3 7/16"	1/16"	3 1/4"	11/16"	4 13/16"
	5	VS	4800	6000	2	1	1	3	90° 00' 00"		3/16"	8 1/2"	8 1/2"	1'-1"	1'-1"	93'-2 3/8"	3/8"	44	6	16	1'-1 5/8"	93'-7 3/8"	15'-0"	4'-9 1/4"	6'-3"	4'-8 3/4"	6'-3"	35	3 11/16"	1/16"	3 1/2"	11/16"	5
	6	IV	4500	5500	3	1	1	3	90° 00' 00"		3/16"	8 1/2"	8 1/2"	1'-1"	1'-1"	93'-2 3/8"	3/8"	44	6	16	1'-1 5/8"	93'-7 3/8"	15'-0"	4'-9	6'-3"	4'-8 3/4"	6'-3"	35	3 7/16"	3/16"	3 7/16"	11/16"	4 13/16"
	7	IV	4500	5500	3	1	1	3	90° 00' 00"		3/16"	8 1/2"	8 1/2"	1'-1"	1'-1"	93'-2 3/8"	3/8"	44	6	16	1'-1 5/8"	93'-7 3/8"	15'-0"	4'-9	6'-3"	4'-8 3/4"	6'-3"	35	3 7/16"	3/16"	3 7/16"	11/16"	4 13/16"
	8	IV	4500	5500	3	1	1	3	90° 00' 00"		3/16"	8 1/2"	8 1/2"	1'-1"	1'-1"	93'-2 3/8"	3/8"	44	6	16	1'-1 5/8"	93'-7 3/8"	15'-0"	4'-9"	6'-3"	4'-8 3/4"	6'-3"	35	3 7/16"	3/16"	3 7/16"	11/16"	4 13/16"
	9	IV	4500	5500	3	1	1	3	90° 00' 00"		3/16"	8 1/2"	8 1/2"	1'-1"	1'-1"	93'-2 3/8"	3/8"	44	6	16	1'-1 5/8"	93'-7 3/8"	15'-0"	4'-9 1/4"	6'-3"	4'-8 3/4"	6'-3"	35	3 5/8"	3/16"	3 5/8"	11/16"	4 13/16"

* CLASS VS - V (SPECIAL)

WORK THIS SHEET WITH SHEETS C-82 & C-83.

3-3-9

REVISIONS											
DATE	BY	DESCRIPTION	DATE	BY	DESCRIPTION	DATE	BY	DESCRIPTION	DATE	BY	DESCRIPTION

	NAME	DATE
DR. BY	HNG	1/94
CHK. BY	CFC	1/94

Greiner
greiner, inc.
Engineers, Architects and Planners

BOARD OF COUNTY COMMISSIONERS
LEE COUNTY, FLORIDA
DEPARTMENT OF TRANSPORTATION

MIDPOINT BRIDGE
PRESTRESSED BEAMS AASHTO TYPE IV
TABLE OF BEAM VARIABLES (I)

PROJECT NO	SHEET NO																															
5896	C-85																															

BX1-97

TABLE OF BEAM VARIABLES

SPAN NO.	BEAM ID.	CONCRETE PROPERTIES CLASS	STRENGTHS REL. (f'ci)	STRENGTHS 28-DAY (f'c)	STND PTRN TYPE	PLAN VIEW CASE (BK)	PLAN VIEW CASE (AH)	END ELEV COND	END OF BEAM AND BEARING ℄ DIMENSIONS ANGLE θ	DIM P	DIM J (BK)	DIM J (AH)	DIM K (BK)	DIM K (AH)	BEAM DIMENSIONS DIM L	DIM R	NO. OF SPACES FOR STIRRUP BARS K S1	S2	S3	STIRRUP DIM. DIM V	REINFORCING STEEL VARIABLES N LENGTH	A LENGTH	K1, K2 H	K1, K2 LENGTH	K3 H	K3 LENGTH	NO. REQ'D.	BUILDUP AND DEFLECTION DATA: REQUIRED THEORETICAL BUILDUP OVER ℄ BEAM BEGIN SPAN	℄ SPAN	END SPAN	DEAD LOAD DEFLECTION DURING POUR (DIM. A)	BEAM CAMBER
15	1	IV	4500	5500	3	1	1	3	90° 00' 00"	1/2"	8 1/2"	7 1/4"	1'-4"	1'-4"	93'-4"	3/8"	44	6	16	1'-4"	93'-6"	15'-0"	4'-10 1/4"	6'-3"	4'-9 1/4"	6'-3"	35	3 7/16"	1/16"	3 3/16"	7/16"	4 3/16"
	2	IV	4500	5500	3	1	1	3	90° 00' 00"	1/16"	8 1/2"	7 1/4"	1'-4"	1'-4"	93'-4"	3/8"	44	6	16	1'-4"	93'-6"	15'-0"	4'-10 1/4"	6'-3"	4'-9"	6'-3"	35	3 1/4"	1/16"	3 3/8"	7/16"	4 3/16"
	3	IV	4500	5500	3	1	1	3	90° 00' 00"	3/16"	8 1/2"	7 1/4"	1'-4"	1'-4"	93'-4"	3/8"	44	6	16	1'-4"	93'-6"	15'-0"	4'-10 1/4"	6'-3"	4'-9"	6'-3"	35	3 1/4"	1/16"	3 3/8"	7/16"	4 3/16"
	4	IV	4500	5500	3	1	1	3	90° 00' 00"	1/4"	8 1/2"	7 1/4"	1'-4"	1'-4"	93'-4"	3/8"	44	6	16	1'-4"	93'-6"	15'-0"	4'-10 1/4"	6'-3"	4'-9"	6'-3"	35	3 1/4"	1/16"	3 3/8"	7/16"	4 3/16"
	5	VS	4800	6000	2	1	1	3	90° 00' 00"	3/16"	8 1/2"	7 1/4"	1'-4"	1'-4"	93'-4"	3/8"	44	6	16	1'-4"	93'-6"	15'-0"	4'-10 1/4"	6'-3"	4'-9 1/4"	6'-3"	35	3 1/2"	1/16"	3 11/16"	7/16"	5"
	6	IV	4500	5500	3	1	1	3	90° 00' 00"	3/16"	8 1/2"	7 1/4"	1'-4"	1'-4"	93'-4"	3/8"	44	6	16	1'-4"	93'-6"	15'-0"	4'-10 1/4"	6'-3"	4'-9"	6'-3"	35	3 7/16"	3/16"	3 7/16"	7/16"	4 3/16"
	7	IV	4500	5500	3	1	1	3	90° 00' 00"	3/16"	8 1/2"	7 1/4"	1'-4"	1'-4"	93'-4"	3/8"	44	6	16	1'-4"	93'-6"	15'-0"	4'-10 1/4"	6'-3"	4'-9"	6'-3"	35	3 7/16"	3/16"	3 7/16"	7/16"	4 3/16"
	8	IV	4500	5500	3	1	1	3	90° 00' 00"	3/16"	8 1/2"	7 1/4"	1'-4"	1'-4"	93'-4"	3/8"	44	6	16	1'-4"	93'-6"	15'-0"	4'-10 1/4"	6'-3"	4'-9"	6'-3"	35	3 7/16"	3/16"	3 7/16"	7/16"	4 3/16"
	9	IV	4500	5500	3	1	1	3	90° 00' 00"	3/16"	8 1/2"	7 1/4"	1'-4"	1'-4"	93'-4"	3/8"	44	6	16	1'-4"	93'-6"	15'-0"	4'-10 1/4"	6'-3"	4'-9 1/4"	6'-3"	35	3 3/8"	3/16"	3 3/8"	7/16"	4 3/16"
16	1	IV	4500	5500	3	1	1	3	90° 00' 00"	1/4"	7 1/4"	8 1/2"	1'-4"	1'-4"	93'-4"	3/8"	44	6	16	1'-4"	93'-6"	15'-0"	4'-10 1/4"	6'-4"	4'-8 3/4"	6'-3"	35	4 1/8"	3/16"	4 1/8"	7/16"	4 3/16"
	2	IV	4500	5500	3	1	1	3	90° 00' 00"	3/16"	7 1/4"	8 1/2"	1'-4"	1'-4"	93'-4"	3/8"	44	6	16	1'-4"	93'-6"	15'-0"	4'-10 1/4"	6'-4"	4'-8 3/4"	6'-3"	35	4 1/16"	3/16"	4 1/2"	7/16"	4 3/16"
	3	IV	4500	5500	3	1	1	3	90° 00' 00"	3/16"	7 1/4"	8 1/2"	1'-4"	1'-4"	93'-4"	3/8"	44	6	16	1'-4"	93'-6"	15'-0"	4'-10 1/4"	6'-4"	4'-8 3/4"	6'-3"	35	4 1/4"	3/16"	4 1/4"	7/16"	4 3/16"
	4	IV	4500	5500	3	1	1	3	90° 00' 00"	1/8"	7 1/4"	8 1/2"	1'-4"	1'-4"	93'-4"	3/8"	44	6	16	1'-4"	93'-6"	15'-0"	4'-10 1/4"	6'-4"	4'-8 3/4"	6'-3"	35	4"	3/16"	4"	7/16"	4 3/16"
	5	VS	4800	6000	2	1	1	3	90° 00' 00"	1/8"	7 1/4"	8 1/2"	1'-4"	1'-4"	93'-4"	3/8"	44	6	16	1'-4"	93'-6"	15'-0"	4'-10 1/4"	6'-4"	4'-8 3/4"	6'-3"	35	4"	3/16"	4 1/16"	7/16"	5"
	6	IV	4500	5500	3	1	1	3	90° 00' 00"	1/8"	7 1/4"	8 1/2"	1'-4"	1'-4"	93'-4"	3/8"	44	6	16	1'-4"	93'-6"	15'-0"	4'-10 1/4"	6'-4"	4'-8 3/4"	6'-3"	35	3 13/16"	3/16"	3 13/16"	7/16"	4 3/16"
	7	IV	4500	5500	3	1	1	3	90° 00' 00"	1/8"	7 1/4"	8 1/2"	1'-4"	1'-4"	93'-4"	3/8"	44	6	16	1'-4"	93'-6"	15'-0"	4'-10 1/4"	6'-4"	4'-8 3/4"	6'-3"	35	3 13/16"	3/16"	3 13/16"	7/16"	4 3/16"
	8	IV	4500	5500	3	1	1	3	90° 00' 00"	1/8"	7 1/4"	8 1/2"	1'-4"	1'-4"	93'-4"	3/8"	44	6	16	1'-4"	93'-6"	15'-0"	4'-10 1/4"	6'-4"	4'-8 3/4"	6'-3"	35	3 13/16"	3/16"	3 13/16"	7/16"	4 3/16"
	9	IV	4500	5500	3	1	1	3	90° 00' 00"	1/8"	7 1/4"	8 1/2"	1'-4"	1'-4"	93'-4"	3/8"	44	6	16	1'-4"	93'-6"	15'-0"	4'-10 1/4"	6'-4"	4'-8 3/4"	6'-3"	35	3 15/16"	3/16"	3 15/16"	7/16"	4 3/16"
17, 18, 21, 22, 25 & 26	1	IV	4500	5500	3	1	1	1	90° 00' 00"	0	8 1/2"	8 1/2"	1'-4"	1'-4"	93'-2 3/8"	3/8"	44	6	16	1'-4 5/8"	93'-7 3/8"	15'-0"	4'-9 1/4"	6'-3"	4'-8 3/4"	6'-3"	35	3 3/8"	3/16"	3 3/8"	7/16"	4 3/16"
	2	IV	4500	5500	3	1	1	1	90° 00' 00"	0	8 1/2"	8 1/2"	1'-4"	1'-4"	93'-2 3/8"	3/8"	44	6	16	1'-4 5/8"	93'-7 3/8"	15'-0"	4'-9"	6'-3"	4'-8 3/4"	6'-3"	35	3 7/16"	3/16"	3 7/16"	7/16"	4 3/16"
	3	IV	4500	5500	3	1	1	1	90° 00' 00"	0	8 1/2"	8 1/2"	1'-4"	1'-4"	93'-2 3/8"	3/8"	44	6	16	1'-4 5/8"	93'-7 3/8"	15'-0"	4'-9"	6'-3"	4'-8 3/4"	6'-3"	35	3 7/16"	3/16"	3 7/16"	7/16"	4 3/16"
	4	IV	4500	5500	3	1	1	1	90° 00' 00"	0	8 1/2"	8 1/2"	1'-4"	1'-4"	93'-2 3/8"	3/8"	44	6	16	1'-4 5/8"	93'-7 3/8"	15'-0"	4'-9"	6'-3"	4'-8 3/4"	6'-3"	35	3 7/16"	3/16"	3 7/16"	7/16"	4 3/16"
	5	VS	4800	6000	2	1	1	1	90° 00' 00"	0	8 1/2"	8 1/2"	1'-4"	1'-4"	93'-2 3/8"	3/8"	44	6	16	1'-4 5/8"	93'-7 3/8"	15'-0"	4'-9 1/4"	6'-3"	4'-8 3/4"	6'-3"	35	3 11/16"	3/16"	3 11/16"	7/16"	5"
	6	IV	4500	5500	3	1	1	1	90° 00' 00"	0	8 1/2"	8 1/2"	1'-4"	1'-4"	93'-2 3/8"	3/8"	44	6	16	1'-4 5/8"	93'-7 3/8"	15'-0"	4'-9"	6'-3"	4'-8 3/4"	6'-3"	35	3 7/16"	3/16"	3 7/16"	7/16"	4 3/16"
	7	IV	4500	5500	3	1	1	1	90° 00' 00"	0	8 1/2"	8 1/2"	1'-4"	1'-4"	93'-2 3/8"	3/8"	44	6	16	1'-4 5/8"	93'-7 3/8"	15'-0"	4'-9"	6'-3"	4'-8 3/4"	6'-3"	35	3 7/16"	3/16"	3 7/16"	7/16"	4 3/16"
	8	IV	4500	5500	3	1	1	1	90° 00' 00"	0	8 1/2"	8 1/2"	1'-4"	1'-4"	93'-2 3/8"	3/8"	44	6	16	1'-4 5/8"	93'-7 3/8"	15'-0"	4'-9"	6'-3"	4'-8 3/4"	6'-3"	35	3 7/16"	3/16"	3 7/16"	7/16"	4 3/16"
	9	IV	4500	5500	3	1	1	1	90° 00' 00"	0	8 1/2"	8 1/2"	1'-4"	1'-4"	93'-2 3/8"	3/8"	44	6	16	1'-4 5/8"	93'-7 3/8"	15'-0"	4'-9 1/4"	6'-3"	4'-8 3/4"	6'-3"	35	3 3/8"	3/16"	3 3/8"	7/16"	4 3/16"
19, 23, & 27	1	IV	4500	5500	3	1	1	1	90° 00' 00"	0	8 1/2"	7 1/4"	1'-4"	1'-4"	93'-4"	3/8"	44	6	16	1'-4"	93'-6"	15'-0"	4'-9 1/4"	6'-3"	4'-8 3/4"	6'-3"	35	3 3/8"	3/16"	3 3/8"	7/16"	4 3/16"
	2	IV	4500	5500	3	1	1	1	90° 00' 00"	0	8 1/2"	7 1/4"	1'-4"	1'-4"	93'-4"	3/8"	44	6	16	1'-4"	93'-6"	15'-0"	4'-9"	6'-3"	4'-8 3/4"	6'-3"	35	3 7/16"	3/16"	3 7/16"	7/16"	4 3/16"
	3	IV	4500	5500	3	1	1	1	90° 00' 00"	0	8 1/2"	7 1/4"	1'-4"	1'-4"	93'-4"	3/8"	44	6	16	1'-4"	93'-6"	15'-0"	4'-9"	6'-3"	4'-8 3/4"	6'-3"	35	3 7/16"	3/16"	3 7/16"	7/16"	4 3/16"
	4	IV	4500	5500	3	1	1	1	90° 00' 00"	0	8 1/2"	7 1/4"	1'-4"	1'-4"	93'-4"	3/8"	44	6	16	1'-4"	93'-6"	15'-0"	4'-9"	6'-3"	4'-8 3/4"	6'-3"	35	3 7/16"	3/16"	3 7/16"	7/16"	4 3/16"
	5	VS	4800	6000	2	1	1	1	90° 00' 00"	0	8 1/2"	7 1/4"	1'-4"	1'-4"	93'-4"	3/8"	44	6	16	1'-4"	93'-6"	15'-0"	4'-9 1/4"	6'-3"	4'-8 3/4"	6'-3"	35	3 11/16"	3/16"	3 11/16"	7/16"	5"
	6	IV	4500	5500	3	1	1	1	90° 00' 00"	0	8 1/2"	7 1/4"	1'-4"	1'-4"	93'-4"	3/8"	44	6	16	1'-4"	93'-6"	15'-0"	4'-9"	6'-3"	4'-8 3/4"	6'-3"	35	3 7/16"	3/16"	3 7/16"	7/16"	4 3/16"
	7	IV	4500	5500	3	1	1	1	90° 00' 00"	0	8 1/2"	7 1/4"	1'-4"	1'-4"	93'-4"	3/8"	44	6	16	1'-4"	93'-6"	15'-0"	4'-9"	6'-3"	4'-8 3/4"	6'-3"	35	3 7/16"	3/16"	3 7/16"	7/16"	4 3/16"
	8	IV	4500	5500	3	1	1	1	90° 00' 00"	0	8 1/2"	7 1/4"	1'-4"	1'-4"	93'-4"	3/8"	44	6	16	1'-4"	93'-6"	15'-0"	4'-9"	6'-3"	4'-8 3/4"	6'-3"	35	3 7/16"	3/16"	3 7/16"	7/16"	4 3/16"
	9	IV	4500	5500	3	1	1	1	90° 00' 00"	0	8 1/2"	7 1/4"	1'-4"	1'-4"	93'-4"	3/8"	44	6	16	1'-4"	93'-6"	15'-0"	4'-9 1/4"	6'-3"	4'-8 3/4"	6'-3"	35	3 3/8"	3/16"	3 3/8"	7/16"	4 3/16"
20 & 24	1	IV	4500	5500	3	1	1	1	90° 00' 00"	0	7 1/4"	8 1/2"	1'-4"	1'-4"	93'-4"	3/8"	44	6	16	1'-4"	93'-6"	15'-0"	4'-9 1/4"	6'-3"	4'-8 3/4"	6'-3"	35	3 3/8"	3/16"	3 3/8"	7/16"	4 3/16"
	2	IV	4500	5500	3	1	1	1	90° 00' 00"	0	7 1/4"	8 1/2"	1'-4"	1'-4"	93'-4"	3/8"	44	6	16	1'-4"	93'-6"	15'-0"	4'-9"	6'-3"	4'-8 3/4"	6'-3"	35	3 7/16"	3/16"	3 7/16"	7/16"	4 3/16"
	3	IV	4500	5500	3	1	1	1	90° 00' 00"	0	7 1/4"	8 1/2"	1'-4"	1'-4"	93'-4"	3/8"	44	6	16	1'-4"	93'-6"	15'-0"	4'-9"	6'-3"	4'-8 3/4"	6'-3"	35	3 7/16"	3/16"	3 7/16"	7/16"	4 3/16"
	4	IV	4500	5500	3	1	1	1	90° 00' 00"	0	7 1/4"	8 1/2"	1'-4"	1'-4"	93'-4"	3/8"	44	6	16	1'-4"	93'-6"	15'-0"	4'-9"	6'-3"	4'-8 3/4"	6'-3"	35	3 7/16"	3/16"	3 7/16"	7/16"	4 3/16"
	5	VS	4800	6000	2	1	1	1	90° 00' 00"	0	7 1/4"	8 1/2"	1'-4"	1'-4"	93'-4"	3/8"	44	6	16	1'-4"	93'-6"	15'-0"	4'-9 1/4"	6'-3"	4'-8 3/4"	6'-3"	35	3 11/16"	3/16"	3 11/16"	7/16"	5"
	6	IV	4500	5500	3	1	1	1	90° 00' 00"	0	7 1/4"	8 1/2"	1'-4"	1'-4"	93'-4"	3/8"	44	6	16	1'-4"	93'-6"	15'-0"	4'-9"	6'-3"	4'-8 3/4"	6'-3"	35	3 7/16"	3/16"	3 7/16"	7/16"	4 3/16"
	7	IV	4500	5500	3	1	1	1	90° 00' 00"	0	7 1/4"	8 1/2"	1'-4"	1'-4"	93'-4"	3/8"	44	6	16	1'-4"	93'-6"	15'-0"	4'-9"	6'-3"	4'-8 3/4"	6'-3"	35	3 7/16"	3/16"	3 7/16"	7/16"	4 3/16"
	8	IV	4500	5500	3	1	1	1	90° 00' 00"	0	7 1/4"	8 1/2"	1'-4"	1'-4"	93'-4"	3/8"	44	6	16	1'-4"	93'-6"	15'-0"	4'-9"	6'-3"	4'-8 3/4"	6'-3"	35	3 7/16"	3/16"	3 7/16"	7/16"	4 3/16"
	9	IV	4500	5500	3	1	1	1	90° 00' 00"	0	7 1/4"	8 1/2"	1'-4"	1'-4"	93'-4"	3/8"	44	6	16	1'-4"	93'-6"	15'-0"	4'-9 1/4"	6'-3"	4'-8 3/4"	6'-3"	35	3 3/8"	3/16"	3 3/8"	7/16"	4 3/16"
28	1	IV	4500	5500	3	1	1	3	90° 00' 00"	1/16"	7 1/4"	8 1/2"	1'-4"	1'-4"	93'-4"	3/8"	44	6	16	1'-4"	93'-6"	15'-0"	4'-9 3/4"	6'-4"	4'-8 3/4"	6'-3"	35	4 3/16"	3/16"	4 3/16"	7/16"	4 3/16"
	2	IV	4500	5500	3	1	1	3	90° 00' 00"	1/16"	7 1/4"	8 1/2"	1'-4"	1'-4"	93'-4"	3/8"	44	6	16	1'-4"	93'-6"	15'-0"	4'-9 3/4"	6'-4"	4'-8 3/4"	6'-3"	35	4"	3/16"	4"	7/16"	4 3/16"
	3	IV	4500	5500	3	1	1	3	90° 00' 00"	1/16"	7 1/4"	8 1/2"	1'-4"	1'-4"	93'-4"	3/8"	44	6	16	1'-4"	93'-6"	15'-0"	4'-9 3/4"	6'-4"	4'-8 3/4"	6'-3"	35	4"	3/16"	4"	7/16"	4 3/16"
	4	IV	4500	5500	3	1	1	3	90° 00' 00"	1/16"	7 1/4"	8 1/2"	1'-4"	1'-4"	93'-4"	3/8"	44	6	16	1'-4"	93'-6"	15'-0"	4'-9 3/4"	6'-4"	4'-8 3/4"	6'-3"	35	4"	3/16"	4"	7/16"	4 3/16"
	5	VS	4800	6000	2	1	1	3	90° 00' 00"	1/16"	7 1/4"	8 1/2"	1'-4"	1'-4"	93'-4"	3/8"	44	6	16	1'-4"	93'-6"	15'-0"	4'-9 3/4"	6'-4"	4'-8 3/4"	6'-3"	35	4 1/4"	3/16"	4 1/4"	7/16"	5"
	6	IV	4500	5500	3	1	1	3	90° 00' 00"	1/16"	7 1/4"	8 1/2"	1'-4"	1'-4"	93'-4"	3/8"	44	6	16	1'-4"	93'-6"	15'-0"	4'-9 3/4"	6'-4"	4'-8 3/4"	6'-3"	35	4"	3/16"	4"	7/16"	4 3/16"
	7	IV	4500	5500	3	1	1	3	90° 00' 00"	1/16"	7 1/4"	8 1/2"	1'-4"	1'-4"	93'-4"	3/8"	44	6	16	1'-4"	93'-6"	15'-0"	4'-9 3/4"	6'-4"	4'-8 3/4"	6'-3"	35	4"	3/16"	4"	7/16"	4 3/16"
	8	IV	4500	5500	3	1	1	3	90° 00' 00"	1/16"	7 1/4"	8 1/2"	1'-4"	1'-4"	93'-4"	3/8"	44	6	16	1'-4"	93'-6"	15'-0"	4'-9 3/4"	6'-4"	4'-8 3/4"	6'-3"	35	4"	3/16"	4"	7/16"	4 3/16"
	9	IV	4500	5500	3	1	1	3	90° 00' 00"	1/16"	7 1/4"	8 1/2"	1'-4"	1'-4"	93'-4"	3/8"	44	6	16	1'-4"	93'-6"	15'-0"	4'-9 3/4"	6'-4"	4'-8 3/4"	6'-3"	35	4 3/16"	3/16"	4 3/16"	7/16"	4 3/16"
29	1	IV	4500	5500	3	1	1	3	90° 00' 00"	5/16"	8 1/2"	8 1/2"	1'-4"	1'-4"	93'-2 3/8"	3/8"	44	6	16	1'-4 5/8"	93'-7 3/8"	15'-0"	4'-9 3/4"	6'-4"	4'-8 3/4"	6'-3"	35	4 1/4"	3/16"	4 1/4"	7/16"	4 3/16"
	2	IV	4500	5500	3	1	1	3	90° 00' 00"	5/16"	8 1/2"	8 1/2"	1'-4"	1'-4"	93'-2 3/8"	3/8"	44	6	16	1'-4 5/8"	93'-7 3/8"	15'-0"	4'-9 3/4"	6'-4"	4'-8 3/4"	6'-3"	35	4 1/8"	3/16"	4 1/8"	7/16"	4 3/16"
	3	IV	4500	5500	3	1	1	3	90° 00' 00"	5/16"	8 1/2"	8 1/2"	1'-4"	1'-4"	93'-2 3/8"	3/8"	44	6	16	1'-4 5/8"	93'-7 3/8"	15'-0"	4'-9 3/4"	6'-4"	4'-8 3/4"	6'-3"	35	4 1/8"	3/16"	4 1/8"	7/16"	4 3/16"
	4	IV	4500	5500	3	1	1	3	90° 00' 00"	5/16"	8 1/2"	8 1/2"	1'-4"	1'-4"	93'-2 3/8"	3/8"	44	6	16	1'-4 5/8"	93'-7 3/8"	15'-0"	4'-9 3/4"	6'-4"	4'-8 3/4"	6'-3"	35	4 1/8"	3/16"	4 1/8"	7/16"	4 3/16"
	5	VS	4800	6000	2	1	1	3	90° 00' 00"	5/16"	8 1/2"	8 1/2"	1'-4"	1'-4"	93'-2 3/8"	3/8"	44	6	16	1'-4 5/8"	93'-7 3/8"	15'-0"	4'-9 3/4"	6'-4"	4'-8 3/4"	6'-3"	35	4 3/8"	3/16"	4 3/8"	7/16"	5"
	6	IV	4500	5500	3	1	1	3	90° 00' 00"	5/16"	8 1/2"	8 1/2"	1'-4"	1'-4"	93'-2 3/8"	3/8"	44	6	16	1'-4 5/8"	93'-7 3/8"	15'-0"	4'-9 3/4"	6'-4"	4'-8 3/4"	6'-3"	35	4 1/8"	3/16"	4 1/8"	7/16"	4 3/16"
	7	IV	4500	5500	3	1	1	3	90° 00' 00"	5/16"	8 1/2"	8 1/2"	1'-4"	1'-4"	93'-2 3/8"	3/8"	44	6	16	1'-4 5/8"	93'-7 3/8"	15'-0"	4'-9 3/4"	6'-4"	4'-8 3/4"	6'-3"	35	4 1/8"	3/16"	4 1/8"	7/16"	4 3/16"
	8	IV	4500	5500	3	1	1	3	90° 00' 00"	5/16"	8 1/2"	8 1/2"	1'-4"	1'-4"	93'-2 3/8"	3/8"	44	6	16	1'-4 5/8"	93'-7 3/8"	15'-0"	4'-9 3/4"	6'-4"	4'-8 3/4"	6'-3"	35	4 1/8"	3/16"	4 1/8"	7/16"	4 3/16"
	9	IV	4500	5500	3	1	1	3	90° 00' 00"	5/16"	8 1/2"	8 1/2"	1'-4"	1'-4"	93'-2 3/8"	3/8"	44	6	16	1'-4 5/8"	93'-7 3/8"	15'-0"	4'-9 3/4"	6'-4"	4'-8 3/4"	6'-3"	35	4 1/4"	3/16"	4 1/4"	7/16"	4 3/16"
30	1	IV	4500	5500	3	1	1	3	90° 00' 00"	9/16"	8 1/2"	8 1/2"	1'-4"	1'-4"	93'-2 3/8"	3/8"	44	6	16	1'-4 5/8"	93'-7 3/8"	15'-0"	4'-9 3/4"	6'-4"	4'-8 3/4"	6'-3"	35	4 1/4"	3/16"	4 1/4"	7/16"	4 3/16"
	2	IV	4500	5500	3	1	1	3	90° 00' 00"	9/16"	8 1/2"	8 1/2"	1'-4"	1'-4"	93'-2 3/8"	3/8"	44	6	16	1'-4 5/8"	93'-7 3/8"	15'-0"	4'-9 3/4"	6'-4"	4'-8 3/4"	6'-3"	35	4 1/8"	3/16"	4 1/8"	7/16"	4 3/16"
	3	IV	4500	5500	3	1	1	3	90° 00' 00"	9/16"	8 1/2"	8 1/2"	1'-4"	1'-4"	93'-2 3/8"	3/8"	44	6	16	1'-4 5/8"	93'-7 3/8"	15'-0"	4'-9 3/4"	6'-4"	4'-8 3/4"	6'-3"	35	4 1/8"	3/16"	4 1/8"	7/16"	4 3/16"
	4	IV	4500	5500	3	1	1	3	90° 00' 00"	9/16"	8 1/2"	8 1/2"	1'-4"	1'-4"	93'-2 3/8"	3/8"	44	6	16	1'-4 5/8"	93'-7 3/8"	15'-0"	4'-9 3/4"	6'-4"	4'-8 3/4"	6'-3"	35	4 1/8"	3/16"	4 1/8"	7/16"	4 3/16"
	5	VS	4800	6000	2	1	1	3	90° 00' 00"	9/16"	8 1/2"	8 1/2"	1'-4"	1'-4"	93'-2 3/8"	3/8"	44	6	16	1'-4 5/8"	93'-7 3/8"	15'-0"	4'-9 3/4"	6'-4"	4'-8 3/4"	6'-3"	35	4 3/8"	3/16"	4 3/8"	7/16"	5"
	6	IV	4500	5500	3	1	1	3	90° 00' 00"	9/16"	8 1/2"	8 1/2"	1'-4"	1'-4"	93'-2 3/8"	3/8"	44	6	16	1'-4 5/8"	93'-7 3/8"	15'-0"	4'-9 3/4"	6'-4"	4'-8 3/4"	6'-3"	35	4 1/8"	3/16"	4 1/8"	7/16"	4 3/16"
	7	IV	4500	5500	3	1	1	3	90° 00' 00"	9/16"	8 1/2"	8 1/2"	1'-4"	1'-4"	93'-2 3/8"	3/8"	44	6	16	1'-4 5/8"	93'-7 3/8"	15'-0"	4'-9 3/4"	6'-4"	4'-8 3/4"	6'-3"	35	4 1/8"	3/16"	4 1/8"	7/16"	4 3/16"
	8	IV	4500	5500	3	1	1	3	90° 00' 00"	9/16"	8 1/2"	8 1/2"	1'-4"	1'-4"	93'-2 3/8"	3/8"	44	6	16	1'-4 5/8"	93'-7 3/8"	15'-0"	4'-9 3/4"	6'-4"	4'-8 3/4"	6'-3"	35	4 1/8"	3/16"	4 1/8"	7/16"	4 3/16"
	9	IV	4500	5500	3	1	1	3	90° 00' 00"	9/16"	8 1/2"	8 1/2"	1'-4"	1'-4"	93'-2 3/8"	3/8"	44	6	16	1'-4 5/8"	93'-7 3/8"	15'-0"	4'-9 3/4"	6'-4"	4'-8 3/4"	6'-3"	35	4 1/4"	3/16"	4 1/4"	7/16"	4 3/16"

WORK THIS SHEET WITH SHEETS C-82 & C-83.

3-3-95

REVISIONS											
DATE	BY	DESCRIPTION	DATE	BY	DESCRIPTION	DATE	BY	DESCRIPTION	DATE	BY	DESCRIPTION

	NAME	DATE
DR. BY	HNG	1/94
CHK. BY	CFC	1/94
SUPV.	REJ	1/94

Greiner
Greiner, Inc.
Tampa, Florida

Engineers, Architects and Planners

BOARD OF COUNTY COMMISSIONERS
LEE COUNTY, FLORIDA
DEPARTMENT OF TRANSPORTATION

MIDPOINT BRIDGE
PRESTRESSED BEAMS AASHTO TYPE IV
TABLE OF BEAM VARIABLES (2)

FRLEECTY

PLOTTED: 27JAN95-10.45.00

C26000.CADD.FG BGPCWPO6.FG2J

PROJECT NO	SHEET NO
5896	C-86

BX1-98

TABLE OF BEAM VARIABLES

SPAN NO.	BEAM NO.	CONCRETE PROPERTIES: CLASS	STRENGTHS: REL. (f'ci)	STRENGTHS: 28-DAY (f'c)	STND PTRN TYPE	PLAN VIEW CASE (BK)	PLAN VIEW CASE (AH)	END ELEV COND	ANGLE θ	DIM P	DIM J (BK)	DIM J (AH)	DIM K (BK)	DIM K (AH)	BEAM DIMENSIONS: DIM L	DIM R	NO. OF SPACES FOR STIRRUP BARS K: S1	S2	S3	STIRRUP DIM. DIM V	N LENGTH	A LENGTH	K1, K2 H	K1, K2 LENGTH	K3 H	K3 LENGTH	K3 NO. REQ'D.	REQUIRED THEORETICAL BUILDUP OVER ℄ BEAM: BEGIN SPAN	℄ SPAN	END SPAN	DEAD LOAD DEFLECTION DURING POUR (DIM. A)	BEAM CAMBER
31	1	IV	4500	5500	3	1	1	3	90° 00' 00"	13/16"	8 1/2"	7 1/4"	1'-1"	1'-1"	93'-1"	3/8"	44	6	16	1'-0 1/2"	93'-5"	15'-0"	4'-9 3/4"	6'-4"	4'-8 3/4"	6'-3"	35	4 1/4"	3/16"	4 1/4"	1 7/16"	4 3/16"
	2	IV	4500	5500	3	1	1	3	90° 00' 00"	13/16"	8 1/2"	7 1/4"	1'-1"	1'-1"	93'-1"	3/8"	44	6	16	1'-0 1/2"	93'-5"	15'-0"	4'-9 3/4"	6'-4"	4'-8 3/4"	6'-3"	35	4 1/8"	3/16"	4 1/8"	1 7/16"	4 3/16"
	3	IV	4500	5500	3	1	1	3	90° 00' 00"	13/16"	8 1/2"	7 1/4"	1'-1"	1'-1"	93'-1"	3/8"	44	6	16	1'-0 1/2"	93'-5"	15'-0"	4'-9 3/4"	6'-4"	4'-8 3/4"	6'-3"	35	4 1/8"	3/16"	4 1/8"	1 7/16"	4 3/16"
	4	IV	4500	5500	3	1	1	3	90° 00' 00"	13/16"	8 1/2"	7 1/4"	1'-1"	1'-1"	93'-1"	3/8"	44	6	16	1'-0 1/2"	93'-5"	15'-0"	4'-9 3/4"	6'-4"	4'-8 3/4"	6'-3"	35	4 1/8"	3/16"	4 1/8"	1 7/16"	4 3/16"
	5	VS	4800	6000	2	1	1	3	90° 00' 00"	13/16"	8 1/2"	7 1/4"	1'-1"	1'-1"	93'-1"	3/8"	44	6	16	1'-0 1/2"	93'-5"	15'-0"	4'-9 3/4"	6'-4"	4'-8 3/4"	6'-3"	35	4 3/8"	3/16"	4 3/8"	1 7/16"	5"
	6	IV	4500	5500	3	1	1	3	90° 00' 00"	13/16"	8 1/2"	7 1/4"	1'-1"	1'-1"	93'-1"	3/8"	44	6	16	1'-0 1/2"	93'-5"	15'-0"	4'-9 3/4"	6'-4"	4'-8 3/4"	6'-3"	35	4 1/8"	3/16"	4 1/8"	1 7/16"	4 3/16"
	7	IV	4500	5500	3	1	1	3	90° 00' 00"	13/16"	8 1/2"	7 1/4"	1'-1"	1'-1"	93'-1"	3/8"	44	6	16	1'-0 1/2"	93'-5"	15'-0"	4'-9 3/4"	6'-4"	4'-8 3/4"	6'-3"	35	4 1/8"	3/16"	4 1/8"	1 7/16"	4 3/16"
	8	IV	4500	5500	3	1	1	3	90° 00' 00"	13/16"	8 1/2"	7 1/4"	1'-1"	1'-1"	93'-1"	3/8"	44	6	16	1'-0 1/2"	93'-5"	15'-0"	4'-9 3/4"	6'-4"	4'-8 3/4"	6'-3"	35	4 1/8"	3/16"	4 1/8"	1 7/16"	4 3/16"
	9	IV	4500	5500	3	1	1	3	90° 00' 00"	13/16"	8 1/2"	7 1/4"	1'-1"	1'-1"	93'-1"	3/8"	44	6	16	1'-0 1/2"	93'-5"	15'-0"	4'-9 3/4"	6'-4"	4'-8 3/4"	6'-3"	35	4 1/4"	3/16"	4 1/4"	1 7/16"	4 3/16"
55	1	IV	4500	5500	3	1	1	2	90° 00' 00"	11/16"	7 1/4"	8 1/2"	1'-1"	1'-1"	93'-1"	3/8"	44	6	16	1'-0 1/2"	93'-5"	15'-0"	4'-10"	6'-4"	4'-8 3/4"	6'-3"	35	4 3/8"	3/16"	4 3/8"	1 7/16"	4 3/16"
	2	IV	4500	5500	3	1	1	2	90° 00' 00"	11/16"	7 1/4"	8 1/2"	1'-1"	1'-1"	93'-1"	3/8"	44	6	16	1'-0 1/2"	93'-5"	15'-0"	4'-10"	6'-4"	4'-8 3/4"	6'-3"	35	4 1/4"	3/16"	4 1/4"	1 7/16"	4 3/16"
	3	IV	4500	5500	3	1	1	2	90° 00' 00"	11/16"	7 1/4"	8 1/2"	1'-1"	1'-1"	93'-1"	3/8"	44	6	16	1'-0 1/2"	93'-5"	15'-0"	4'-10"	6'-4"	4'-8 3/4"	6'-3"	35	4 1/4"	3/16"	4 1/4"	1 7/16"	4 3/16"
	4	IV	4500	5500	3	1	1	2	90° 00' 00"	11/16"	7 1/4"	8 1/2"	1'-1"	1'-1"	93'-1"	3/8"	44	6	16	1'-0 1/2"	93'-5"	15'-0"	4'-10"	6'-4"	4'-8 3/4"	6'-3"	35	4 1/4"	3/16"	4 1/4"	1 7/16"	4 3/16"
	5	VS	4800	6000	2	1	1	2	90° 00' 00"	11/16"	7 1/4"	8 1/2"	1'-1"	1'-1"	93'-1"	3/8"	44	6	16	1'-0 1/2"	93'-5"	15'-0"	4'-10"	6'-4"	4'-8 3/4"	6'-3"	35	4 1/2"	3/16"	4 1/2"	1 7/16"	5"
	6	IV	4500	5500	3	1	1	2	90° 00' 00"	3/8"	7 1/4"	8 1/2"	1'-1"	1'-1"	93'-1"	3/8"	44	6	16	1'-0 1/2"	93'-5"	15'-0"	4'-10"	6'-4"	4'-8 3/4"	6'-3"	35	4 1/8"	0	4 1/8"	1 7/16"	4 3/16"
	7	IV	4500	5500	3	1	1	2	90° 00' 00"	1/2"	7 1/4"	8 1/2"	1'-1"	1'-1"	93'-1"	3/8"	44	6	16	1'-0 1/2"	93'-5"	15'-0"	4'-10"	6'-4"	4'-8 3/4"	6'-3"	35	4 1/8"	0	4 1/8"	1 7/16"	4 3/16"
	8	IV	4500	5500	3	1	1	2	90° 00' 00"	7/16"	7 1/4"	8 1/2"	1'-1"	1'-1"	93'-1"	3/8"	44	6	16	1'-0 1/2"	93'-5"	15'-0"	4'-10"	6'-4"	4'-8 3/4"	6'-3"	35	4 1/8"	0	4 1/8"	1 7/16"	4 3/16"
	9	IV	4500	5500	3	1	1	2	90° 00' 00"	5/16"	7 1/4"	8 1/2"	1'-1"	1'-1"	93'-1"	3/8"	44	6	16	1'-0 1/2"	93'-5"	15'-0"	4'-10"	6'-4"	4'-8 3/4"	6'-3"	35	4 1/4"	0	4 5/16"	1 7/16"	4 3/16"
56	1	IV	4500	5500	3	1	1	2	90° 00' 00"	1/2"	8 1/2"	8 1/2"	1'-1"	1'-1"	93'-2 3/8"	3/8"	44	6	16	1'-1 3/8"	93'-7 3/8"	15'-0"	4'-9"	6'-3"	4'-8 3/4"	6'-3"	35	3"	3/16"	3 1/16"	1 7/16"	4 3/16"
	2	IV	4500	5500	3	1	1	2	90° 00' 00"	1/2"	8 1/2"	8 1/2"	1'-1"	1'-1"	93'-2 3/8"	3/8"	44	6	16	1'-1 3/8"	93'-7 3/8"	15'-0"	4'-9"	6'-3"	4'-8 3/4"	6'-3"	35	3 3/16"	3/16"	3 1/4"	1 7/16"	4 3/16"
	3	IV	4500	5500	3	1	1	2	90° 00' 00"	7/16"	8 1/2"	8 1/2"	1'-1"	1'-1"	93'-2 3/8"	3/8"	44	6	16	1'-1 3/8"	93'-7 3/8"	15'-0"	4'-9"	6'-3"	4'-8 3/4"	6'-3"	35	3 5/16"	3/16"	3 5/8"	1 7/16"	4 3/16"
	4	IV	4500	5500	3	1	1	2	90° 00' 00"	3/8"	8 1/2"	8 1/2"	1'-1"	1'-1"	93'-2 3/8"	3/8"	44	6	16	1'-1 3/8"	93'-7 3/8"	15'-0"	4'-10"	6'-4"	4'-8 3/4"	6'-3"	35	3 7/8"	3/16"	3 15/16"	1 7/16"	4 3/16"
	5	VS	4800	6000	2	1	1	2	90° 00' 00"	3/8"	8 1/2"	8 1/2"	1'-1"	1'-1"	93'-2 3/8"	3/8"	44	6	16	1'-1 3/8"	93'-7 3/8"	15'-0"	4'-10"	6'-4"	4'-8 3/4"	6'-3"	35	4 1/2"	3/16"	4 9/16"	1 7/16"	5"
	6	IV	4500	5500	3	1	1	2	90° 00' 00"	5/16"	8 1/2"	8 1/2"	1'-1"	1'-1"	93'-2 3/8"	3/8"	44	6	16	1'-1 3/8"	93'-7 3/8"	15'-0"	4'-10"	6'-4"	4'-8 3/4"	6'-3"	35	4 1/8"	3/16"	4 5/16"	1 7/16"	4 3/16"
	7	IV	4500	5500	3	1	1	2	90° 00' 00"	3/16"	8 1/2"	8 1/2"	1'-1"	1'-1"	93'-2 3/8"	3/8"	44	6	16	1'-1 3/8"	93'-7 3/8"	15'-0"	4'-10"	6'-4"	4'-8 3/4"	6'-3"	35	4 1/8"	3/16"	4 5/16"	1 7/16"	4 3/16"
	8	IV	4500	5500	3	1	1	2	90° 00' 00"	1/8"	8 1/2"	8 1/2"	1'-1"	1'-1"	93'-2 3/8"	3/8"	44	6	16	1'-1 3/8"	93'-7 3/8"	15'-0"	4'-10"	6'-4"	4'-8 3/4"	6'-3"	35	4 1/8"	3/16"	4 5/16"	1 7/16"	4 3/16"
	9	IV	4500	5500	3	1	1	2	90° 00' 00"	1/16"	8 1/2"	8 1/2"	1'-1"	1'-1"	93'-2 3/8"	3/8"	44	6	16	1'-1 3/8"	93'-7 3/8"	15'-0"	4'-10"	6'-4"	4'-8 3/4"	6'-3"	35	4 5/16"	3/16"	4 7/16"	1 7/16"	4 3/16"
57	1	IV	4500	5500	3	3	2	2	89° 59' 57" / 89° 55' 56"	1/16"	8 1/2"	7 1/4"	1'-1"	1'-1"	93'-0 1/2"	3/8"	44	6	16	1'-0 3/4"	93'-5 1/2"	15'-0"	4'-10"	6'-4"	4'-9"	6'-3"	35	4 3/8"	3/8"	4 9/16"	1 7/16"	4 3/16"
	2	IV	4500	5500	3	3	2	2	89° 59' 57" / 89° 55' 56"	3/8"	8 1/2"	7 1/4"	1'-1"	1'-1"	93'-0 3/4"	3/8"	44	6	16	1'-0 7/8"	93'-5 3/4"	15'-0"	4'-10"	6'-4"	4'-9"	6'-3"	35	4 3/16"	3/8"	4 3/8"	1 7/16"	4 3/16"
	3	IV	4500	5500	3	3	2	2	89° 59' 57" / 89° 55' 56"	1/4"	8 1/2"	7 1/4"	1'-1"	1'-1"	93'-0 3/4"	3/8"	44	6	16	1'-0 7/8"	93'-5 3/4"	15'-0"	4'-10"	6'-4"	4'-9"	6'-3"	35	4 3/16"	3/8"	4 3/8"	1 7/16"	4 3/16"
	4	IV	4500	5500	3	3	2	2	89° 59' 57" / 89° 55' 56"	3/16"	8 1/2"	7 1/4"	1'-1"	1'-1"	93'-1"	3/8"	44	6	16	1'-1"	93'-6"	15'-0"	4'-10"	6'-4"	4'-9"	6'-3"	35	4 3/16"	3/8"	4 3/8"	1 7/16"	4 3/16"
	5	VS	4800	6000	2	3	2	2	89° 59' 57" / 89° 55' 56"	1/16"	8 1/2"	7 1/4"	1'-1"	1'-1"	93'-1"	3/8"	44	6	16	1'-1"	93'-6"	15'-0"	4'-10"	6'-4"	4'-9"	6'-3"	35	4 7/16"	3/8"	4 5/8"	1 7/16"	5"
	6	IV	4500	5500	3	3	2	1	89° 59' 57" / 89° 55' 56"	0	8 1/2"	7 1/4"	1'-1"	1'-1"	93'-1 1/4"	3/8"	44	6	16	1'-1 1/8"	93'-6 1/4"	15'-0"	4'-10"	6'-4"	4'-9"	6'-3"	35	4 3/16"	3/8"	4 3/8"	1 7/16"	4 3/16"
	7	IV	4500	5500	3	3	2	3	89° 59' 57" / 89° 55' 56"	1/16"	8 1/2"	7 1/4"	1'-1"	1'-1"	93'-1 1/4"	3/8"	44	6	16	1'-1 1/8"	93'-6 1/4"	15'-0"	4'-10"	6'-4"	4'-9"	6'-3"	35	4 3/16"	3/8"	4 3/8"	1 7/16"	4 3/16"
	8	IV	4500	5500	3	3	2	3	89° 59' 57" / 89° 55' 56"	3/16"	8 1/2"	7 1/4"	1'-1"	1'-1"	93'-1 1/2"	3/8"	44	6	16	1'-1 1/4"	93'-6 1/2"	15'-0"	4'-10"	6'-4"	4'-9"	6'-3"	35	4 3/16"	3/8"	4 3/8"	1 7/16"	4 3/16"
	9	IV	4500	5500	3	3	2	3	89° 59' 57" / 89° 55' 56"	1/4"	8 1/2"	7 1/4"	1'-1"	1'-1"	93'-1 3/4"	3/8"	44	6	16	1'-1 3/8"	93'-6 3/4"	15'-0"	4'-10"	6'-4"	4'-9"	6'-3"	35	4 3/8"	3/8"	4 1/2"	1 7/16"	4 3/16"
58	1	IV	4300	5500	4	3	2	2	88° 35' 29"	5/16"	7 1/4"	8 1/2"	1'-1"	1'-1"	91'-3 1/4"	3/8"	44	6	15	1'-2 1/8"	91'-8 1/4"	15'-0"	4'-9 1/4"	6'-3"	4'-9 1/4"	6'-3"	33	3 5/8"	1/2"	3 3/4"	1 3/8"	3 15/16"
	2	IV	4500	5500	3	3	2	2	88° 35' 29"	1/4"	7 1/4"	8 1/2"	1'-1"	1'-1"	91'-8 1/2"	3/8"	44	6	16	4 3/4"	92'-1 1/2"	15'-0"	4'-10"	6'-4"	4'-9 1/4"	6'-3"	34	4 3/16"	1/2"	4 5/16"	1 3/8"	4 3/4"
	3	IV	4500	5500	3	3	2	2	88° 35' 29"	3/16"	7 1/4"	8 1/2"	1'-1"	1'-1"	92'-2"	3/8"	44	6	16	7 1/2"	92'-7"	15'-0"	4'-10"	6'-4"	4'-9 1/4"	6'-3"	34	4 1/8"	1/2"	4 1/4"	1 3/8"	4 3/4"
	4	IV	4500	5500	3	3	2	2	88° 35' 29"	1/16"	7 1/4"	8 1/2"	1'-1"	1'-1"	92'-7 1/2"	3/8"	44	6	16	10 1/4"	93'-0 1/2"	15'-0"	4'-10"	6'-4"	4'-9 1/4"	6'-3"	35	4 1/16"	1/2"	4 1/4"	1 7/16"	4 3/4"
	5	VS	4800	6000	2	3	2	1	88° 35' 29"	0	7 1/4"	8 1/2"	1'-1"	1'-1"	93'-1"	3/8"	44	6	16	1'-1"	93'-6"	15'-0"	4'-10"	6'-4"	4'-9 1/4"	6'-3"	35	4 5/16"	1/2"	4 7/16"	1 7/16"	5"
	6	IV	4600	5500	1	3	2	3	88° 35' 29"	1/16"	7 1/4"	8 1/2"	1'-1"	1'-1"	93'-6 1/2"	3/8"	44	6	17	3 3/4"	93'-11 1/2"	15'-0"	4'-10"	6'-4"	4'-9 1/4"	6'-3"	36	4 1/8"	1/2"	4 1/4"	1 7/16"	4 15/16"
	7	IV	4600	5500	1	3	2	3	88° 35' 29"	3/16"	7 1/4"	8 1/2"	1'-1"	1'-1"	94'-0"	3/8"	44	6	17	6 1/2"	94'-5"	15'-0"	4'-10"	6'-4"	4'-9 1/4"	6'-3"	36	4 1/16"	1/2"	4 1/4"	1 1/2"	5"
	8	VS	4600	6000	1	3	2	3	88° 35' 29"	1/4"	7 1/4"	8 1/2"	1'-1"	1'-1"	94'-5 1/4"	3/8"	44	6	17	9 1/8"	94'-10 1/4"	15'-0"	4'-10"	6'-4"	4'-9 1/4"	6'-3"	37	3 15/16"	1/2"	4 1/16"	1 1/2"	4 7/8"
	9	VS	4600	6000	1	3	2	3	88° 35' 29"	5/16"	7 1/4"	8 1/2"	1'-1"	1'-1"	94'-10 3/4"	3/8"	44	6	17	11 7/8"	95'-3 3/4"	15'-0"	4'-10"	6'-4"	4'-9 1/4"	6'-3"	37	3 15/16"	1/2"	4 1/8"	1 9/16"	4 7/8"
59	1	IV	4300	5500	4	3	2	1	88° 35' 29"	0	8 1/2"	8 1/2"	1'-1"	1'-1"	91'-4 1/2"	3/8"	44	6	15	1'-2 3/4"	91'-9 1/2"	15'-0"	4'-9 1/2"	6'-3"	4'-9 1/4"	6'-3"	33	3 11/16"	9/16"	3 11/16"	1 3/8"	3 15/16"
	2	IV	4500	5500	3	3	2	1	88° 35' 29"	0	8 1/2"	8 1/2"	1'-1"	1'-1"	91'-9 3/4"	3/8"	44	6	16	5 3/8"	92'-2 3/4"	15'-0"	4'-10"	6'-4"	4'-9 1/4"	6'-3"	34	4 1/4"	9/16"	4 1/4"	1 3/8"	4 3/4"
	3	IV	4500	5500	3	3	2	1	88° 35' 29"	0	8 1/2"	8 1/2"	1'-1"	1'-1"	92'-3 1/4"	3/8"	44	6	16	8 1/8"	92'-8 1/4"	15'-0"	4'-10"	6'-4"	4'-9 1/4"	6'-3"	35	4 1/4"	9/16"	4 1/4"	1 3/8"	4 3/4"
	4	IV	4500	5500	3	3	2	1	88° 35' 29"	0	8 1/2"	8 1/2"	1'-1"	1'-1"	92'-8 3/4"	3/8"	44	6	16	10 7/8"	93'-1 3/4"	15'-0"	4'-10"	6'-4"	4'-9 1/4"	6'-3"	35	4 1/4"	9/16"	4 1/4"	1 7/16"	4 3/4"
	5	VS	4800	6000	2	3	2	1	88° 35' 29"	0	8 1/2"	8 1/2"	1'-1"	1'-1"	93'-2 1/4"	3/8"	44	6	16	1'-1 5/8"	93'-7 1/4"	15'-0"	4'-10"	6'-4"	4'-9 1/4"	6'-3"	35	4 1/2"	9/16"	4 1/2"	1 7/16"	5"
	6	IV	4600	5500	1	3	2	1	88° 35' 29"	0	8 1/2"	8 1/2"	1'-1"	1'-1"	93'-7 3/4"	3/8"	44	6	17	4 3/8"	94'-0 3/4"	15'-0"	4'-10"	6'-4"	4'-9 1/4"	6'-3"	36	4 3/8"	9/16"	4 3/8"	1 7/16"	4 15/16"
	7	IV	4600	5500	1	3	2	1	88° 35' 29"	0	8 1/2"	8 1/2"	1'-1"	1'-1"	94'-1 1/4"	3/8"	44	6	17	7 1/8"	94'-6 1/4"	15'-0"	4'-10"	6'-4"	4'-9 1/4"	6'-3"	36	4 3/8"	9/16"	4 3/8"	1 1/2"	5"
	8	VS	4600	6000	1	3	2	1	88° 35' 29"	0	8 1/2"	8 1/2"	1'-1"	1'-1"	94'-6 1/2"	3/8"	44	6	17	9 3/4"	94'-11 1/2"	15'-0"	4'-10"	6'-4"	4'-9 1/4"	6'-3"	37	4 1/4"	9/16"	4 1/4"	1 1/2"	4 7/8"
	9	VS	4600	6000	1	3	2	1	88° 35' 29"	0	8 1/2"	8 1/2"	1'-1"	1'-1"	95'-0"	3/8"	44	6	17	1'-0 1/2"	95'-5"	15'-0"	4'-10"	6'-4"	4'-9 1/4"	6'-3"	37	4 5/16"	9/16"	4 5/16"	1 9/16"	4 7/8"
60	1	IV	4300	5500	4	3	2	1	88° 35' 29"	0	8 1/2"	7 1/4"	1'-1"	1'-1"	91'-3 3/4"	3/8"	44	6	15	1'-2 1/8"	91'-8 1/4"	15'-0"	4'-9 1/2"	6'-3"	4'-9 1/4"	6'-3"	33	3 11/16"	9/16"	3 11/16"	1 3/8"	3 15/16"
	2	IV	4500	5500	3	3	2	1	88° 35' 29"	0	8 1/2"	7 1/4"	1'-1"	1'-1"	91'-8 1/2"	3/8"	44	6	16	4 3/4"	92'-1 1/2"	15'-0"	4'-10"	6'-4"	4'-9 1/4"	6'-3"	34	4 1/4"	9/16"	4 1/4"	1 3/8"	4 3/4"
	3	IV	4500	5500	3	3	2	1	88° 35' 29"	0	8 1/2"	7 1/4"	1'-1"	1'-1"	92'-2"	3/8"	44	6	16	7 1/2"	92'-7"	15'-0"	4'-10"	6'-4"	4'-9 1/4"	6'-3"	34	4 1/4"	9/16"	4 1/4"	1 3/8"	4 3/4"
	4	IV	4500	5500	3	3	2	1	88° 35' 29"	0	8 1/2"	7 1/4"	1'-1"	1'-1"	92'-7 1/2"	3/8"	44	6	16	10 1/4"	93'-0 1/2"	15'-0"	4'-10"	6'-4"	4'-9 1/4"	6'-3"	35	4 1/4"	9/16"	4 1/4"	1 7/16"	4 3/4"
	5	VS	4800	6000	2	3	2	1	88° 35' 29"	0	8 1/2"	7 1/4"	1'-1"	1'-1"	93'-1"	3/8"	44	6	16	1'-1"	93'-6"	15'-0"	4'-10"	6'-4"	4'-9 1/4"	6'-3"	35	4 1/2"	9/16"	4 1/2"	1 7/16"	5"
	6	IV	4600	5500	1	3	2	1	88° 35' 29"	0	8 1/2"	7 1/4"	1'-1"	1'-1"	93'-6 1/2"	3/8"	44	6	17	3 3/4"	93'-11 1/2"	15'-0"	4'-10"	6'-4"	4'-9 1/4"	6'-3"	36	4 3/8"	9/16"	4 3/8"	1 7/16"	4 15/16"
	7	IV	4600	5500	1	3	2	1	88° 35' 29"	0	8 1/2"	7 1/4"	1'-1"	1'-1"	94'-0"	3/8"	44	6	17	6 1/2"	94'-5"	15'-0"	4'-10"	6'-4"	4'-9 1/4"	6'-3"	36	4 3/8"	9/16"	4 3/8"	1 1/2"	5"
	8	VS	4600	6000	1	3	2	1	88° 35' 29"	0	8 1/2"	7 1/4"	1'-1"	1'-1"	94'-5 1/4"	3/8"	44	6	17	9 1/8"	94'-10 1/4"	15'-0"	4'-10"	6'-4"	4'-9 1/4"	6'-3"	37	4 1/4"	9/16"	4 1/4"	1 1/2"	4 7/8"
	9	VS	4600	6000	1	3	2	1	88° 35' 29"	0	8 1/2"	7 1/4"	1'-1"	1'-1"	94'-10 3/4"	3/8"	44	6	17	11 7/8"	95'-3 3/4"	15'-0"	4'-10"	6'-4"	4'-9 1/4"	6'-3"	37	4 5/16"	9/16"	4 5/16"	1 9/16"	4 7/8"

WORK THIS SHEET WITH SHEETS C-82 & C-83.

R.E. Jarrett 3-3-95

REVISIONS											
DATE	BY	DESCRIPTION	DATE	BY	DESCRIPTION	DATE	BY	DESCRIPTION	DATE	BY	DESCRIPTION

	NAME	DATE
DR. BY	HNG	1/94
CHK. BY	CFC	1/94
SUPV.	REJ	1/94

Greiner
Greiner, Inc.
Tampa, Florida

Engineers, Architects and Planners

BOARD OF COUNTY COMMISSIONERS
LEE COUNTY, FLORIDA
DEPARTMENT OF TRANSPORTATION

MIDPOINT BRIDGE
PRESTRESSED BEAMS AASHTO TYPE IV
TABLE OF BEAM VARIABLES (3)

FRLEECTY

PLOTTED: 27JAN95-10.47.20

PROJECT NO.	SHEET NO.
5896	C-87

BX1-99

TABLE OF BEAM VARIABLES / REINFORCING STEEL VARIABLES / BUILDUP AND DEFLECTION DATA

SPAN NO.	BEAM ID.	CONCRETE PROPERTIES: CLASS	STRENGTHS: REL. (f'ci)	STRENGTHS: 28-DAY (f'c)	STND PTRN TYPE	PLAN VIEW CASE (BK)	PLAN VIEW CASE (AH)	END ELEV COND	END OF BEAM AND BEARING & DIMENSIONS: ANGLE θ	DIM P	DIM J (BK)	DIM J (AH)	DIM K (BK)	DIM K (AH)	BEAM DIMENSIONS: DIM L	DIM R	NO. OF SPACES FOR STIRRUP BARS K: S1	S2	S3	STIRRUP DIM. DIM V	N LENGTH	A LENGTH	K1, K2: H	K1, K2: LENGTH	K3: H	K3: LENGTH	K3: NO. REQ'D.	REQUIRED THEORETICAL BUILDUP OVER ℄ BEAM: BEGIN SPAN	℄ SPAN	END SPAN	DEAD LOAD DEFLECTION DURING POUR (DIM. A)	BEAM CAMBER
61	1	IV	4300	5500	4	3	2	1	88° 35' 29"	0	7 1/4"	8 1/2"	1'-1"	1'-1"	91'-3 1/4"	3/8"	44	6	15	1'-2 1/8"	91'-8 1/4"	15'-0"	4'-9 1/2"	6'-3"	4'-9 1/4"	6'-3"	33	3 11/16"	5/16"	3 11/16"	1 7/8"	3 5/16"
	2	IV	4500	5500	3	3	2	1	88° 35' 29"	0	7 1/4"	8 1/2"	1'-1"	1'-1"	91'-8 1/2"	3/8"	44	6	16	4 3/4"	92'-1 1/2"	15'-0"	4'-10"	6'-4"	4'-9 1/4"	6'-3"	34	4 1/4"	5/16"	4 1/4"	1 7/8"	4 3/4"
	3	IV	4500	5500	3	3	2	1	88° 35' 29"	0	7 1/4"	8 1/2"	1'-1"	1'-1"	92'-2"	3/8"	44	6	16	7 1/2"	92'-7"	15'-0"	4'-10"	6'-4"	4'-9 1/4"	6'-3"	34	4 1/4"	5/16"	4 1/4"	1 7/8"	4 3/4"
	4	IV	4500	5500	3	3	2	1	88° 35' 29"	0	7 1/4"	8 1/2"	1'-1"	1'-1"	92'-7 1/2"	3/8"	44	6	16	10 1/4"	93'-0 1/2"	15'-0"	4'-10"	6'-4"	4'-9 1/4"	6'-3"	35	4 1/4"	5/16"	4 1/4"	1 11/16"	4 3/4"
	5	VS	4800	6000	2	3	2	1	88° 35' 29"	0	7 1/4"	8 1/2"	1'-1"	1'-1"	93'-1"	3/8"	44	6	16	1'-1"	93'-6"	15'-0"	4'-10"	6'-4"	4'-9 1/4"	6'-3"	35	4 1/2"	5/16"	4 1/2"	1 11/16"	5"
	6	IV	4600	5500	1	3	2	1	88° 35' 25"	0	7 1/4"	8 1/2"	1'-1"	1'-1"	93'-8 1/2"	3/8"	44	6	17	3 3/8"	93'-11 1/2"	15'-0"	4'-10"	6'-4"	4'-9 1/4"	6'-3"	36	4 7/8"	5/16"	4 7/8"	1 11/16"	4 5/16"
	7	IV	4600	5500	1	3	2	1	88° 35' 29"	0	7 1/4"	8 1/2"	1'-1"	1'-1"	94'-0"	3/8"	44	6	17	6 1/2"	94'-5"	15'-0"	4'-10"	6'-4"	4'-9 1/4"	6'-3"	36	4 7/8"	5/16"	4 7/8"	1 1/2"	5"
	8	VS	4600	6000	1	3	2	1	88° 35' 29"	0	7 1/4"	8 1/2"	1'-1"	1'-1"	94'-3 1/4"	3/8"	44	6	17	9 1/8"	94'-10 1/4"	15'-0"	4'-10"	6'-4"	4'-9 1/4"	6'-3"	37	4 1/4"	5/16"	4 1/4"	1 1/2"	4 7/8"
	9	VS	4600	6000	1	3	2	1	88° 35' 29"	0	7 1/4"	8 1/2"	1'-1"	1'-1"	94'-10 1/4"	3/8"	44	6	17	11 7/8"	95'-3 1/4"	15'-0"	4'-10"	6'-4"	4'-9 1/4"	6'-3"	37	4 9/16"	5/16"	4 9/16"	1 9/16"	4 7/8"
62	1	IV	4300	5500	4	3	2	1	88° 35' 29"	0	8 1/2"	8 1/2"	1'-1"	1'-1"	91'-4 1/2"	3/8"	44	6	15	1'-2 3/4"	91'-9 1/2"	15'-0"	4'-9 1/4"	6'-3"	4'-9 1/4"	6'-3"	33	3 9/16"	5/16"	3 9/16"	1 7/8"	3 15/16"
	2	IV	4500	5500	3	3	2	1	88° 35' 29"	0	8 1/2"	8 1/2"	1'-1"	1'-1"	91'-9 3/4"	3/8"	44	6	16	5 3/8"	92'-2 3/4"	15'-0"	4'-9 3/4"	6'-4"	4'-9 1/4"	6'-3"	34	4 3/16"	5/16"	4 3/16"	1 7/8"	4 3/4"
	3	IV	4500	5500	3	3	2	1	88° 35' 29"	0	8 1/2"	8 1/2"	1'-1"	1'-1"	92'-3 1/4"	3/8"	44	6	16	8 1/8"	92'-8 1/4"	15'-0"	4'-9 3/4"	6'-4"	4'-9 1/4"	6'-3"	35	4 3/16"	5/16"	4 3/16"	1 7/8"	4 3/4"
	4	IV	4500	5500	3	3	2	1	88° 35' 29"	0	8 1/2"	8 1/2"	1'-1"	1'-1"	92'-8 3/4"	3/8"	44	6	16	10 7/8"	93'-1 3/4"	15'-0"	4'-9 3/4"	6'-4"	4'-9 1/4"	6'-3"	35	4 1/8"	5/16"	4 1/8"	1 11/16"	4 3/4"
	5	VS	4800	6000	2	3	2	1	88° 35' 29"	0	8 1/2"	8 1/2"	1'-1"	1'-1"	93'-2 1/4"	3/8"	44	6	16	1'-1 5/8"	93'-7 1/4"	15'-0"	4'-9 3/4"	6'-4"	4'-9 1/4"	6'-3"	35	4 7/16"	5/16"	4 7/16"	1 11/16"	5"
	6	IV	4600	5500	1	3	2	1	88° 35' 29"	0	8 1/2"	8 1/2"	1'-1"	1'-1"	93'-7 3/4"	3/8"	44	6	17	4 3/8"	94'-0 3/4"	15'-0"	4'-9 3/4"	6'-4"	4'-9 1/4"	6'-3"	36	4 1/4"	5/16"	4 1/4"	1 11/16"	4 5/16"
	7	IV	4600	5500	1	3	2	1	88° 35' 29"	0	8 1/2"	8 1/2"	1'-1"	1'-1"	94'-1 1/4"	3/8"	44	6	17	7 1/8"	94'-6 1/4"	15'-0"	4'-9 3/4"	6'-4"	4'-9 1/4"	6'-3"	36	4 1/4"	5/16"	4 1/4"	1 1/2"	5"
	8	VS	4600	6000	1	3	2	1	88° 35' 29"	0	8 1/2"	8 1/2"	1'-1"	1'-1"	94'-6 1/2"	3/8"	44	6	17	9 3/4"	94'-11 1/2"	15'-0"	4'-9 3/4"	6'-4"	4'-9 1/4"	6'-3"	37	4 7/16"	5/16"	4 7/16"	1 1/2"	4 7/8"
	9	VS	4600	6000	1	3	2	1	88° 35' 29"	0	8 1/2"	8 1/2"	1'-1"	1'-1"	95'-0"	3/8"	44	6	17	1'-0 1/2"	95'-5"	15'-0"	4'-9 3/4"	6'-4"	4'-9 1/4"	6'-3"	37	4 1/4"	5/16"	4 1/4"	1 9/16"	4 7/8"
63	1	IV	4300	5500	4	3	2	2	88° 35' 29"	3/16"	8 1/2"	7 1/2"	1'-1"	1'-2"	91'-2 1/2"	3/8"	44	6	15	1'-1 3/4"	91'-7 1/2"	15'-0"	4'-9 1/2"	6'-3"	4'-9 1/4"	6'-3"	33	3 11/16"	5/16"	3 11/16"	1 7/8"	3 5/16"
	2	IV	4500	5500	3	3	2	2	88° 35' 29"	3/16"	8 1/2"	7 1/2"	1'-1"	1'-2"	91'-7 3/4"	3/8"	44	6	16	4 7/8"	92'-0 3/4"	15'-0"	4'-10"	6'-4"	4'-9 1/4"	6'-3"	34	4 1/4"	5/16"	4 1/4"	1 7/8"	4 3/4"
	3	IV	4500	5500	3	3	2	2	88° 35' 29"	3/16"	8 1/2"	7 1/2"	1'-1"	1'-2"	92'-1 1/4"	3/8"	44	6	16	7 1/8"	92'-6 1/4"	15'-0"	4'-10"	6'-4"	4'-9 1/4"	6'-3"	34	4 1/4"	5/16"	4 1/4"	1 7/8"	4 3/4"
	4	IV	4500	5500	3	3	2	2	88° 35' 29"	3/16"	8 1/2"	7 1/2"	1'-1"	1'-2"	92'-6 3/4"	3/8"	44	6	16	9 7/8"	92'-11 3/4"	15'-0"	4'-10"	6'-4"	4'-9 1/4"	6'-3"	35	4 1/4"	5/16"	4 1/4"	1 11/16"	4 3/4"
	5	VS	4800	6000	2	3	2	2	88° 35' 29"	3/16"	8 1/2"	7 1/2"	1'-1"	1'-2"	93'-0 1/4"	3/8"	44	6	16	1'-0 5/8"	93'-5 1/4"	15'-0"	4'-10"	6'-4"	4'-9 1/4"	6'-3"	35	4 1/2"	5/16"	4 1/2"	1 11/16"	5"
	6	IV	4600	5500	1	3	2	2	88° 35' 29"	3/16"	8 1/2"	7 1/2"	1'-1"	1'-2"	93'-5 3/4"	3/8"	44	6	17	3 7/8"	93'-10 3/4"	15'-0"	4'-10"	6'-4"	4'-9 1/4"	6'-3"	36	4 7/8"	5/16"	4 7/8"	1 11/16"	4 5/16"
	7	IV	4600	5500	1	3	2	2	88° 35' 29"	3/16"	8 1/2"	7 1/2"	1'-1"	1'-2"	93'-11 1/4"	3/8"	44	6	17	6 1/8"	94'-4 1/4"	15'-0"	4'-10"	6'-4"	4'-9 1/4"	6'-3"	36	4 7/8"	5/16"	4 7/8"	1 1/2"	5"
	8	VS	4600	6000	1	3	2	2	88° 35' 29"	3/16"	8 1/2"	7 1/2"	1'-1"	1'-2"	94'-4 1/2"	3/8"	44	6	17	8 3/4"	94'-9 1/2"	15'-0"	4'-10"	6'-4"	4'-9 1/4"	6'-3"	37	4 1/4"	5/16"	4 1/4"	1 1/2"	4 7/8"
	9	VS	4600	6000	1	3	2	3	88° 35' 29"	3/16"	8 1/2"	7 1/2"	1'-1"	1'-2"	94'-10"	3/8"	44	6	17	11 1/2"	95'-3"	15'-0"	4'-10"	6'-4"	4'-9 1/4"	6'-3"	37	4 5/16"	5/16"	4 5/16"	1 9/16"	4 7/8"

WORK THIS SHEET WITH SHEETS C-82 & C-83.

3-3-95

REVISIONS											
DATE	BY	DESCRIPTION	DATE	BY	DESCRIPTION	DATE	BY	DESCRIPTION	DATE	BY	DESCRIPTION

	NAME	DATE
DR. BY	HNG	1/94
CHK. BY	CFC	1/94
SUPV.	REJ	1/94

Greiner, Inc. Tampa, Florida — Engineers, Architects and Planners

BOARD OF COUNTY COMMISSIONERS
LEE COUNTY, FLORIDA
DEPARTMENT OF TRANSPORTATION

MIDPOINT BRIDGE
PRESTRESSED BEAMS AASHTO TYPE IV
TABLE OF BEAM VARIABLES (4)

PLOTTED: 27JAN95-10.50 JO

FILE: CCTY 5896000 CADD.FG BGRCM/POB.FGBJ

BX1-100

PROJECT NO	SHEET NO
5896	C-88A

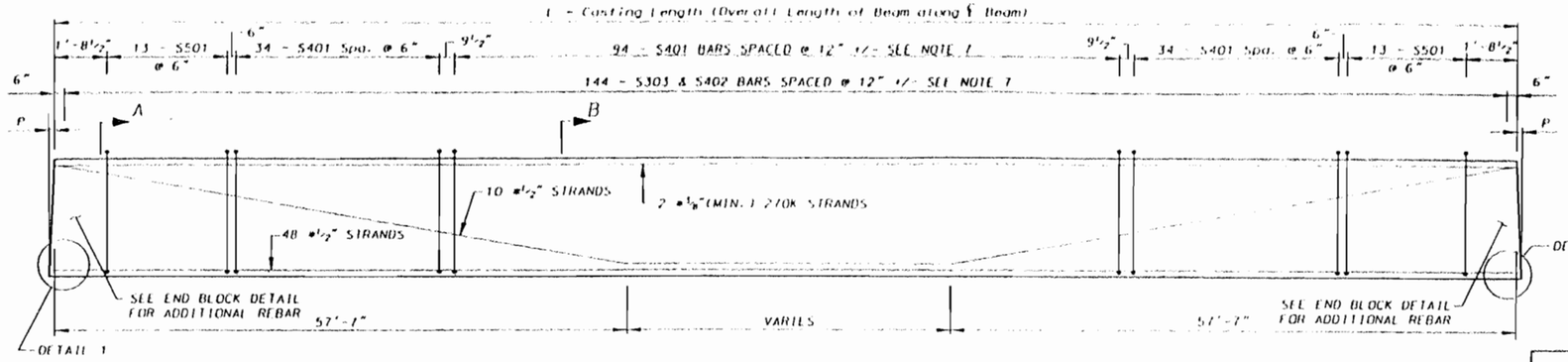

NOTE: DIMENSION R HAS BEEN INCLUDED IN THE LENGTH (L) OF BEAMS TO COMPENSATE FOR ELASTIC SHORTING EFFECTS AND LONGITUDINAL GRADE.

ELEVATION

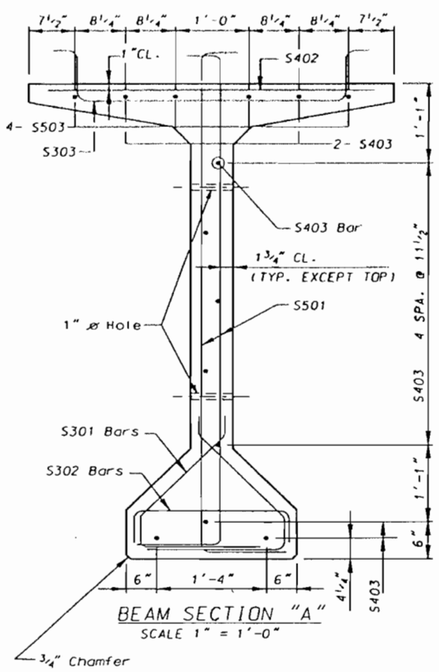

BEAM SECTION "A"
SCALE 1" = 1'-0"

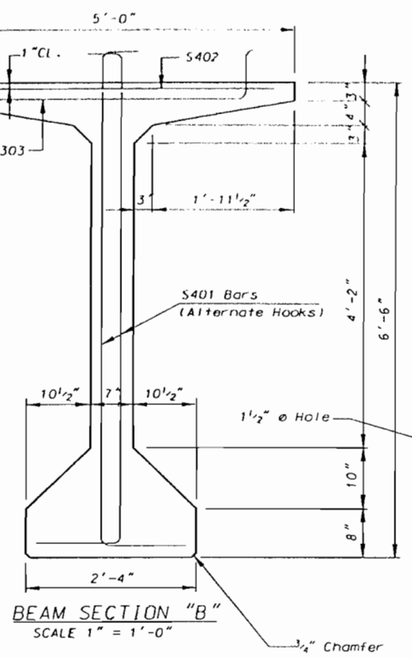

BEAM SECTION "B"
SCALE 1" = 1'-0"

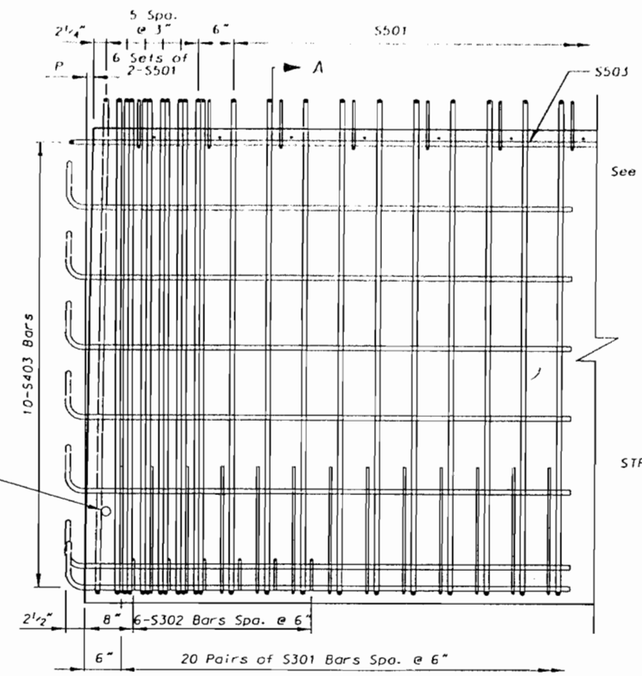

END BLOCK DETAIL
SCALE 1" = 1'-0"

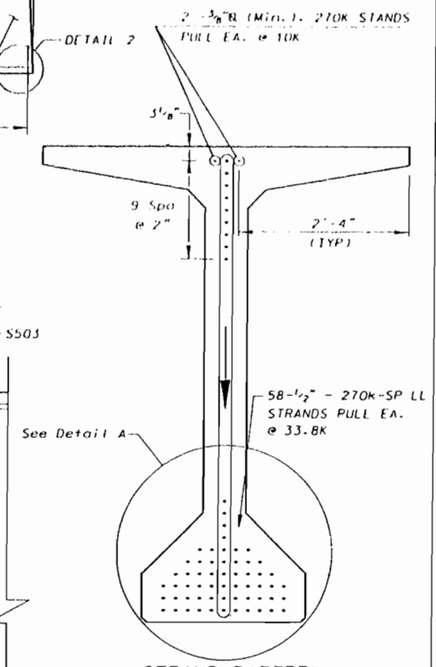

STRAND PATTERN
SCALE 1" = 1'-0"

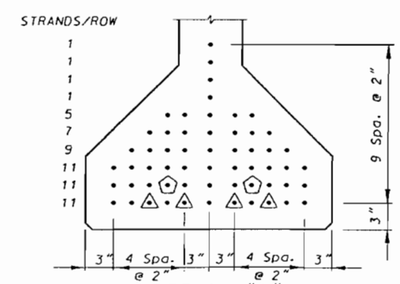

DETAIL "A"
SCALE 1½" = 1'-0"

⊙ INDICATES STRANDS SHIELDED 15.0'
△ INDICATES STRANDS SHIELDED 30.0'

BILL OF REINFORCING STEEL
(VALID FOR ONE BEAM)
(160 TOTAL BEAMS)

BAR MARK	SIZE	No. OF BARS	LENGTH FT. IN.
S503	#5	8	22-07.50
S501	#5	50	8-05.75
S401	#4	162	8-05.75
S402	#4	144	4-08.00
S403	#4	20	6-08.00
S301	#3	80	4-07.00
S302	#3	12	2-11.50
S303	#3	144	5-08.00

BAR SHAPES

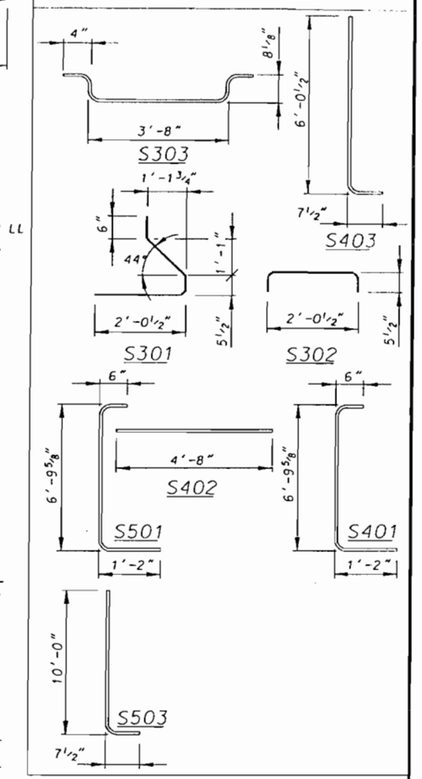

NOTES: ALL BAR DIMENSIONS ARE OUT-TO-OUT. BARS SHALL BE BENT AROUND PINS HAVING THE FOLLOWING DIAMETERS FOR RESPECTIVE SIZES:

BAR SIZE	PIN DIAMETERS
#3	1"
#4	2"
#5	2½"
#6	4½"

NOTES:

1. FOR DIMENSIONS L, P & R SEE SHEET C-89A.
2. PROVIDE INSERTS FOR TEMPORARY BRACING & DIAPHRAGMS AS REQUIRED.
3. FOR BEAM NOTES SEE SHEET C-2A.
4. ALL LONGITUDINAL BEAM DIMENSIONS ARE MEASURED ALONG THE TOP OF THE BEAM AT CENTERLINE OF BEAM.
5. BARS S403 SHALL BE BENT PRIOR TO THE BEAM LEAVING THE PRESTRESSING YARD.
6. CONCRETE: CLASS V
   STRENGTH AT 28 DAYS: $F_c' = 6500psi$
   STRENGTH AT RELEASE: $F_{ci}' = 5000psi$
7. ADJUST SPACING OF BARS AT GIRDER CENTERLINE TO MATCH CASTING LENGTH.

HDR 10 MAY 96

FINLEY McNARY/JANSSEN SPAANS
a Joint Venture

Finley McNary Engineers, Inc
1391 Timberlane Road Suite 200
Tallahassee, Florida 32312-1721

Janssen & Spaans Engineers, Inc.
2825 East 56th Street
Indianapolis, Indiana 46220

REVISIONS

DATE	BY	DESCRIPTION	DATE	BY	DESCRIPTION	DATE	BY	DESCRIPTION	DATE	BY

	NAME	DATE
DR. BY	J.L.S.	1/96
CHK. BY	C.W.N.	1/96
SUPV.	H.D.R.	1/96

FINLEY McNARY/JANSSEN SPAANS

BOARD OF COUNTY COMMISSIONERS
LEE COUNTY, FLORIDA
DEPARTMENT OF TRANSPORTATION

MIDPOINT BRIDGE
MODIFIED TYPE VI GIRDER (144'-0")
HIGH LEVEL APPROACH UNITS

43

PROJECT NO	SHEET NO
5896	C-89A

BX1-101

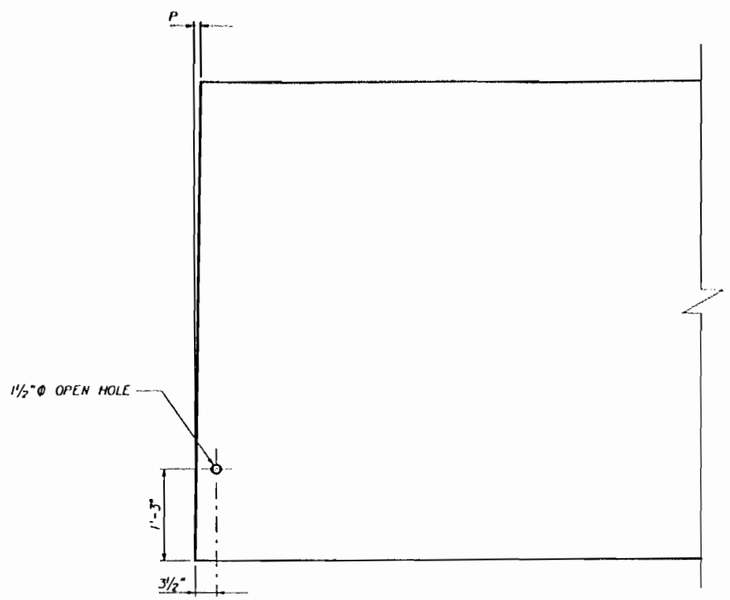

AT PIERS 33 THRU 41 AND 46 THRU 54

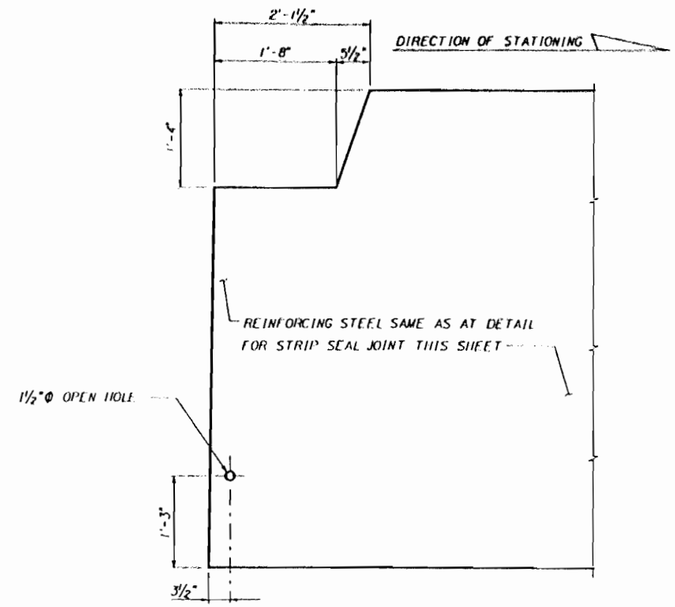

AT PIER 45 (42 Opposite Hand)

DETAILS AT END OF BEAM

(End Block Reinforcement Not Shown For Clarity)

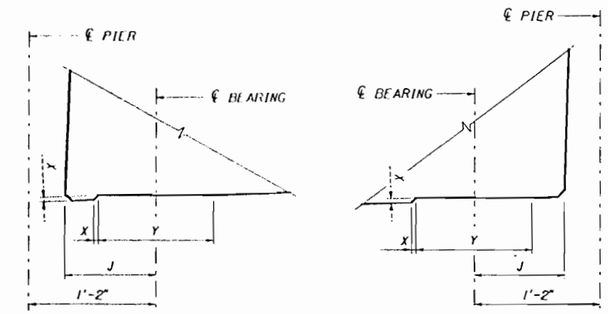

DETAIL 'A'

DETAIL 'B'

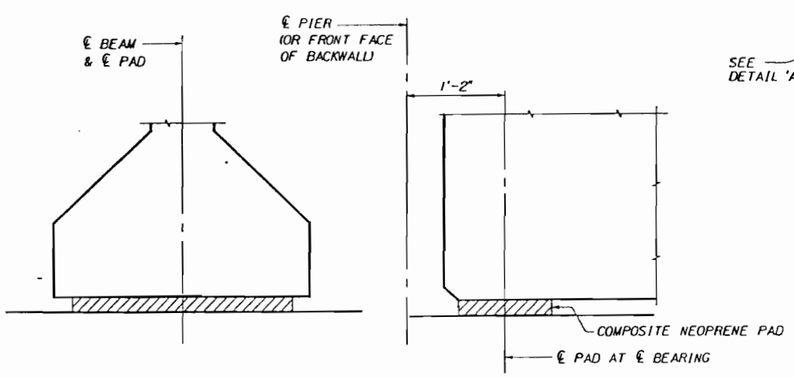

END ELEVATION

SIDE ELEVATION

SECTION OF BEARING ASSEMBLY-TYPICAL DETAIL

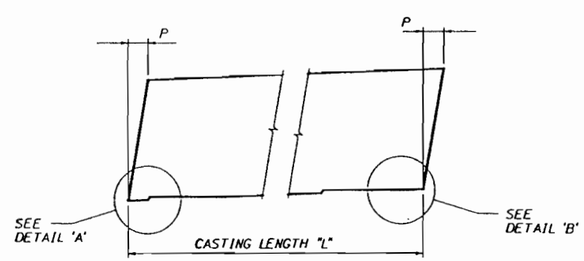

CONDITION 1

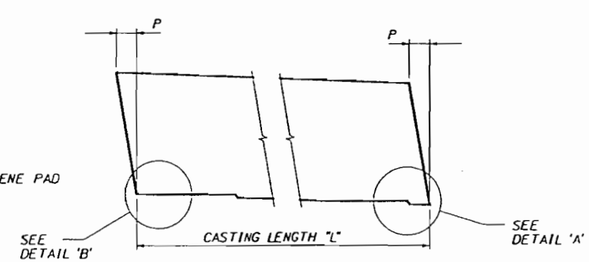

CONDITION 2

DIRECTION OF STATIONING

END ELEVATIONS OF BEAM

(SHOWING VERTICAL BEVEL OF BEAM END)

MODIFIED TYPE VI GIRDER DATA

SPAN NO.	END CONDITION	START END (LEFT)				FINISH END (RIGHT)					CASTING LENGTH
		"J"	"P"	"X"	"Y"	"J"	"P"	"X"	"Y"	"R"	
32	1	9½"	2¼"	⅜"	1'-0⅝"	10"	1⅛"	0	1'-0⅝"	1¾"	144'-1⅞"
33	1	10"	2¾"	½"	1'-0⅝"	10"	1⅝"	¼"	1'-0⅝"	1 11/16"	144'-2¾"
34	1	10"	3"	½"	1'-0⅝"	9½"	1⅞"	¼"	1'-0⅝"	1 13/16"	144'-2⅜"
35	1	9½"	3"	½"	1'-0⅝"	10"	1⅞"	¼"	1'-0⅝"	1 13/16"	144'-2⅜"
36	1	10"	3"	½"	1'-0⅝"	10"	1⅞"	¼"	1'-0⅝"	1 13/16"	144'-2⅞"
37	1	10"	3"	½"	1'-0⅝"	9½"	1⅞"	¼"	1'-0⅝"	1 13/16"	144'-2⅜"
38	1	9½"	3"	½"	1'-0⅝"	10"	1⅞"	¼"	1'-0⅝"	1 13/16"	144'-2⅜"
39	1	10"	3"	½"	1'-0⅝"	10"	1⅞"	¼"	1'-0⅝"	1 13/16"	144'-2⅞"
40	1	10"	2⅞"	½"	1'-0⅝"	10"	1¾"	¼"	1'-0⅝"	1 13/16"	144'-2¾"
41	1	10"	2⅜"	⅜"	1'-0⅝"	9½"	1¼"	¼"	1'-0⅝"	1 7/16"	144'-2"
45	2	9½"	1⅛"	¼"	1'-0⅝"	10"	2¼"	⅜"	1'-0⅝"	1 7/16"	144'-2"
46	2	10"	1¾"	¼"	1'-0⅝"	10"	2⅞"	½"	1'-0⅝"	1¾"	144'-2¾"
47	2	10"	1⅞"	¼"	1'-0⅝"	10"	3"	½"	1'-0⅝"	1 13/16"	144'-2⅞"
48	2	10"	1⅞"	¼"	1'-0⅝"	9½"	3"	½"	1'-0⅝"	1 13/16"	144'-2⅜"
49	2	9½"	1⅞"	¼"	1'-0⅝"	10"	3"	½"	1'-0⅝"	1 13/16"	144'-2⅜"
50	2	10"	1⅞"	¼"	1'-0⅝"	10"	3"	½"	1'-0⅝"	1 13/16"	144'-2⅞"
51	2	10"	1⅞"	¼"	1'-0⅝"	9½"	3"	½"	1'-0⅝"	1 13/16"	144'-2⅜"
52	2	9½"	1⅞"	¼"	1'-0⅝"	10"	3"	½"	1'-0⅝"	1 13/16"	144'-2⅜"
53	2	10"	1⅝"	¼"	1'-0⅝"	10"	2¾"	½"	1'-0⅝"	1 11/16"	144'-2¾"
54	2	10"	1"	0	1'-0⅝"	9½"	2⅛"	⅜"	1'-0⅝"	1 5/16"	144'-1⅞"

HDR 6 MAY 96

FINLEY McNARY/JANSSEN SPAANS
a Joint Venture

Finley McNary Engineers, Inc
1391 Timberlane Road Suite 200
Tallahassee, Florida 32312-1721

Janssen & Spaans Engineers, Inc.
2825 East 56th Street
Indianapolis, Indiana 46220

REVISIONS

DATE	BY	DESCRIPTION	DATE	BY	DESCRIPTION	DATE	BY	DESCRIPTION	DATE	BY	

	NAME	DATE
DR. BY	J.L.S.	1/96
CHK. BY	C.W.N.	1/96
SUPV.	H.D.R.	1/96

FINLEY McNARY/JANSSEN SPAANS

BOARD OF COUNTY COMMISSIONERS
LEE COUNTY, FLORIDA
DEPARTMENT OF TRANSPORTATION

MIDPOINT BRIDGE
MODIFIED TYPE VI GIRDER DETAILS (1)

44

PROJECT NO	SHEET NO
5896	C-90A

BX1-102

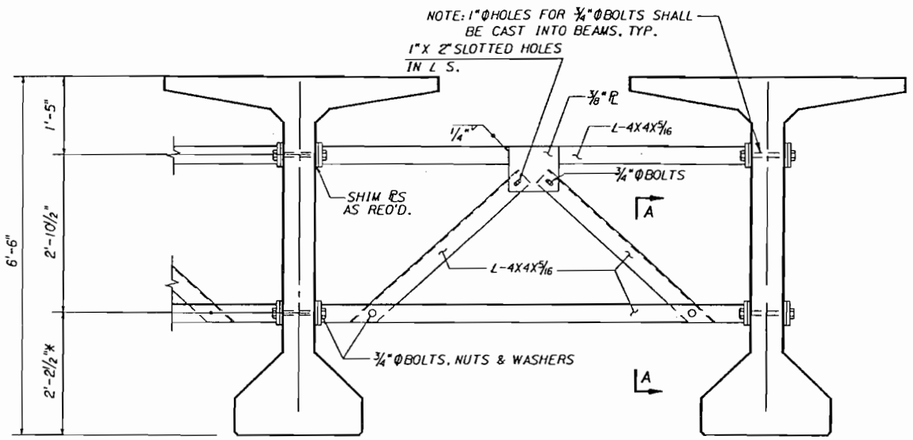

*ADJUST THIS DIMENSION ON A BEAM BASIS TO AVOID INTERFERENCE WITH DRAPED STRANDS.

AT TYPICAL SECTION

SECTION SHOWING TEMPORARY BRACING
(TYPICAL FOR APPROACH UNITS)

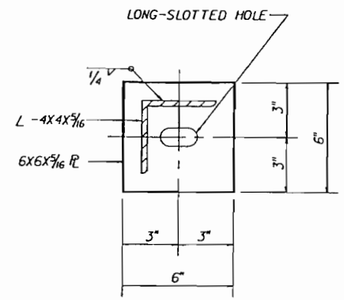

VIEW A-A

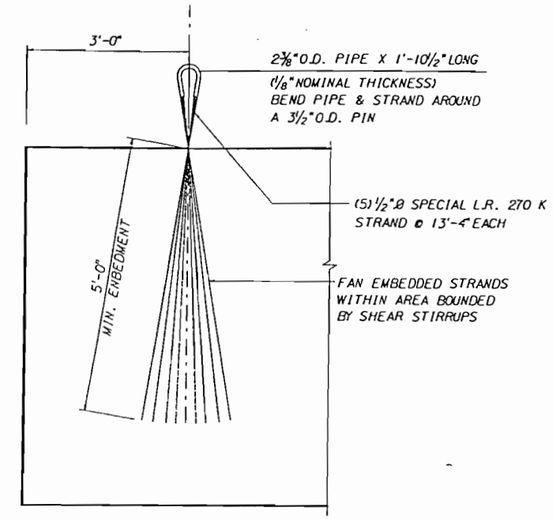

DETAIL 'A'

NOTE: PAYMENT FOR TEMPORARY BRACINGS TO BE INCLUDED IN THE PRICE BID FOR PRESTRESSED BEAMS. (SPECIAL).

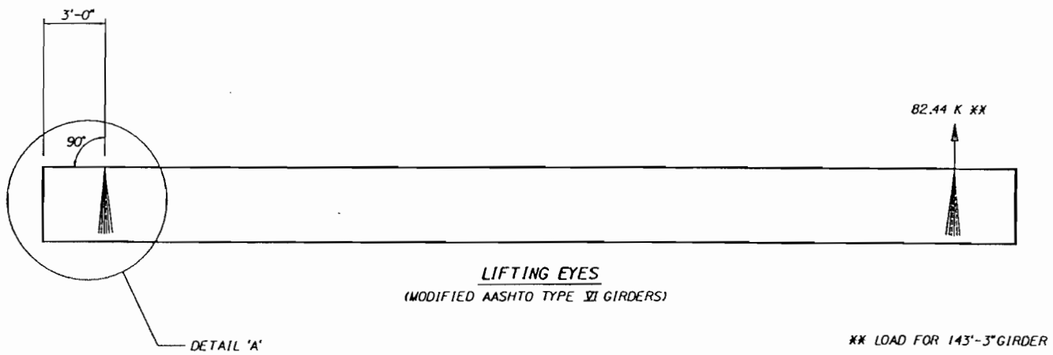

LIFTING EYES
(MODIFIED AASHTO TYPE VI GIRDERS)

** LOAD FOR 143'-3" GIRDER

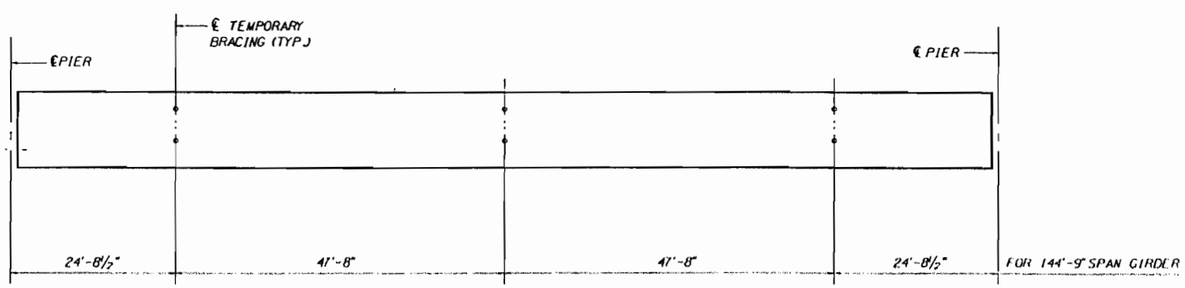

ELEVATION (APPROACH SPAN BEAMS)

HDR 6 May 96

FINLEY McNARY/JANSSEN SPAANS
a Joint Venture

Finley McNary Engineers, Inc.
1391 Timberlane Road Suite 290
Tallahassee, Florida 32312-721

Janssen & Spaans Engineers, Inc.
2825 East 56th Street
Indianapolis, Indiana 46220

REVISIONS

DATE	BY	DESCRIPTION	DATE	BY	DESCRIPTION	DATE	BY	DESCRIPTION	DATE	BY

	NAME	DATE
DR. BY	J.L.S.	1/96
CHK. BY	C.W.K.	1/96
SUPV.	H.D.R.	1/96

FINLEY McNARY/JANSSEN SPAANS

BOARD OF COUNTY COMMISSIONERS
LEE COUNTY, FLORIDA
DEPARTMENT OF TRANSPORTATION

MIDPOINT BRIDGE
MODIFIED TYPE VI GIRDER DETAILS (2)

BX1-103	PROJECT NO.	SHEET NO
	5896	C-91A

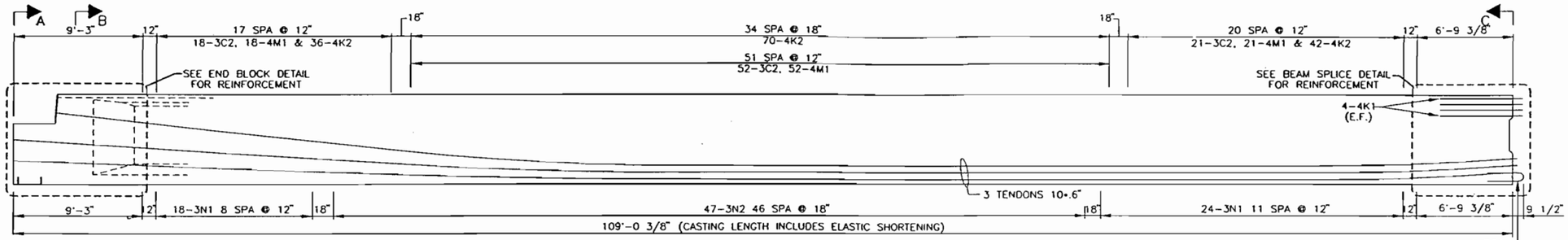

ELEVATION
(16 BEAMS REQUIRED)

BILL OF REINFORCING STEEL
(VALID FOR ONE BEAM)
(BEAM LENGTHS 109'-0 3/8")

BAR MARK	SIZE	No. OF BARS	LENGTH FT. IN.
8L1	#8	4	6'-7 1/4"
7G1	#7	4	5'-9"
6K1	#6	8	4'-9"
5C1	#5	14	7'-2"
5C2	#5	10	5'-11"
5C4	#5	3	9'-1 3/4"
5C5	#5	6	5'-2"
5N1	#5	5	19'-6"
5N2	#5	6	14'-0 1/2"
5U1	#5	3	17'-11" to 15'-5"
5W1	#5	12	11'-10"
5W2	#5	6	9'-5"
4C7	#4	4	4'-9"
4K1	#4	8	6'-9"
4K2	#4	182	8'-3 1/2"
4M1	#4	108	4'-10"
3C2	#3	108	5'-9 1/2"
3N1	#3	108	4'-4 1/4"
3N2	#3	47	5'-3 1/2"

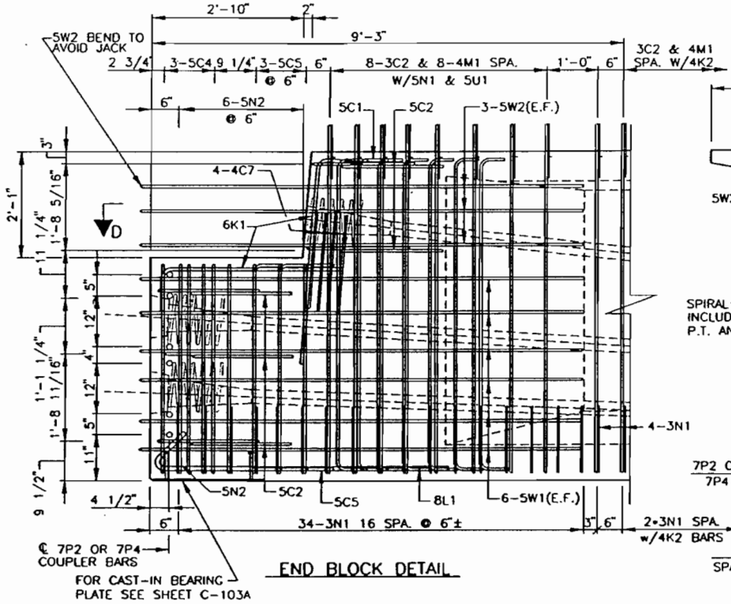

END BLOCK DETAIL

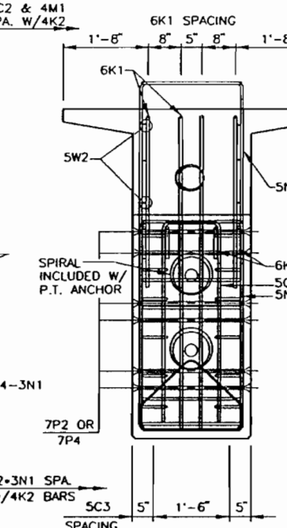

SECTION A

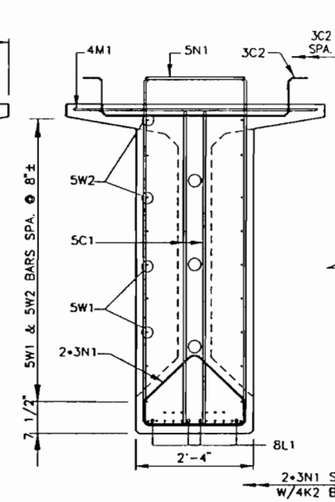

SECTION B

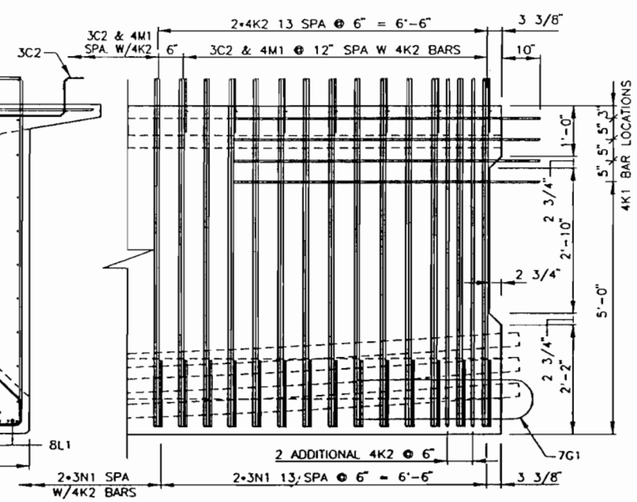

BEAM SPLICE DETAIL

BAR SHAPES

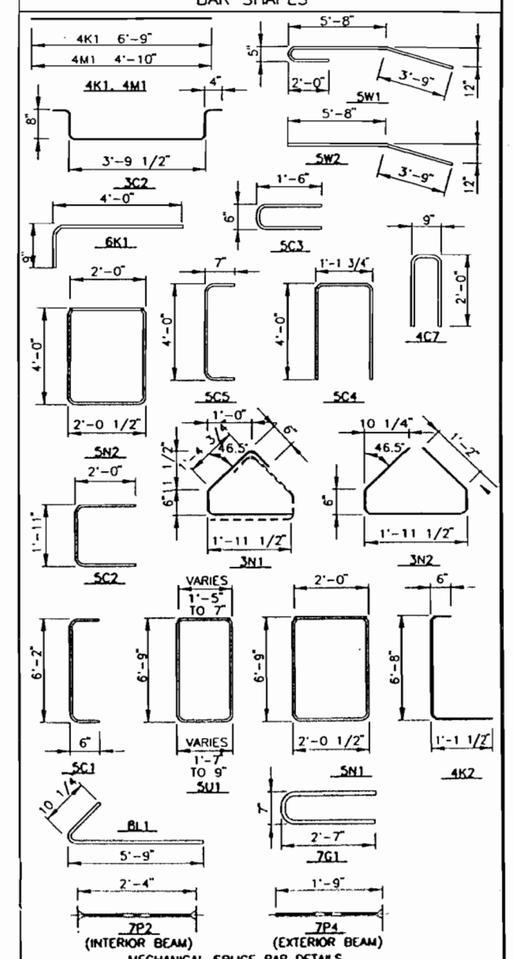

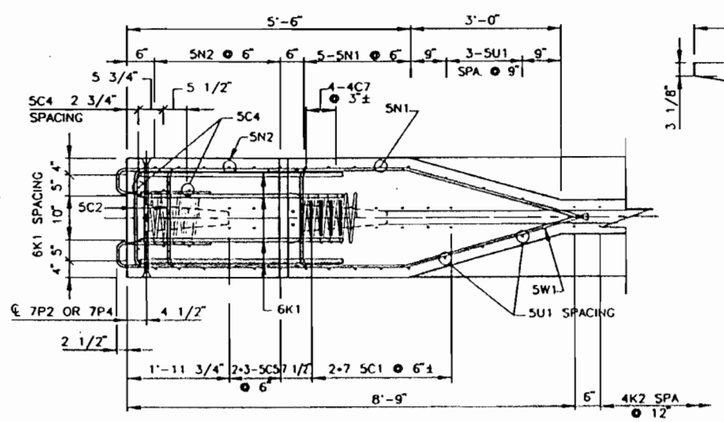

SECTION D

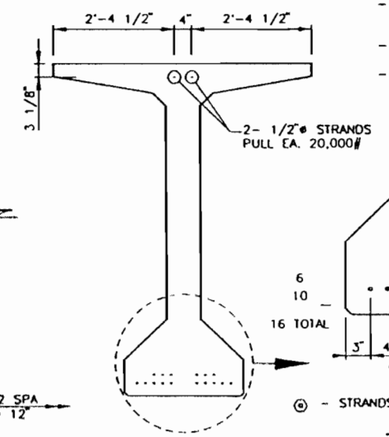

NOTE:
- REQUIRED CONCRETE STRENGTH (f'c=6500 psi)
  f'ci @ RELEASE = 4500 psi
  f'ci @ HANDLING = 4500 psi
- BEAMS MUST BE KEPT IN A VERTICAL POSTION AT ALL TIMES.
- ALL LONGITUDINAL BEAM DIMENSIONS ARE MEASURED ALONG THE BOTTOM OF THE BEAM AT CENTERLINE OF BEAM

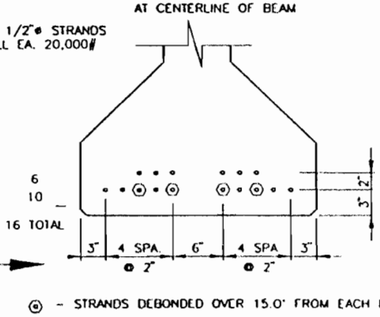

Ⓢ - STRANDS DEBONDED OVER 15.0' FROM EACH END

STRAND PATTERN
16 - 1/2"ø STRANDS
As = 0.167 IN. SQ./STRAND
270 ksi LOLAX SPECIAL
PULL EA. 33820#

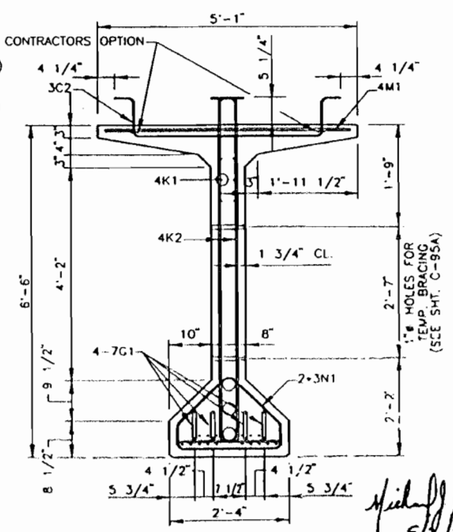

SECTION C

Michael J. Halter
5/3/96

FINLEY McNARY/JANSSEN SPAANS
a Joint Venture

Finley McNary Engineers, Inc
1391 Timberlane Road Suite 200
Tallahassee, Florida 32317-1721

Janssen & Spaans Engineers, Inc.
2825 East 56th Street
Indianapolis, Indiana 46220

REVISIONS											
DATE	BY	DESCRIPTION	DATE	BY	DESCRIPTION	DATE	BY	DESCRIPTION	DATE	BY	

	NAME	DATE
DR. BY	TAL	1/96
CHK. BY	MJH	1/96
SUPV.	MJH	1/96

FINLEY McNARY/JANSSEN SPAANS

BOARD OF COUNTY COMMISSIONERS
LEE, COUNTY, FLORIDA
DEPARTMENT OF TRANSPORTATION

MIDPOINT BRIDGE
MAIN SPAN UNIT END SEGMENT

BX1-104	PROJECT NO. 5896	SHEET NO. C-92A

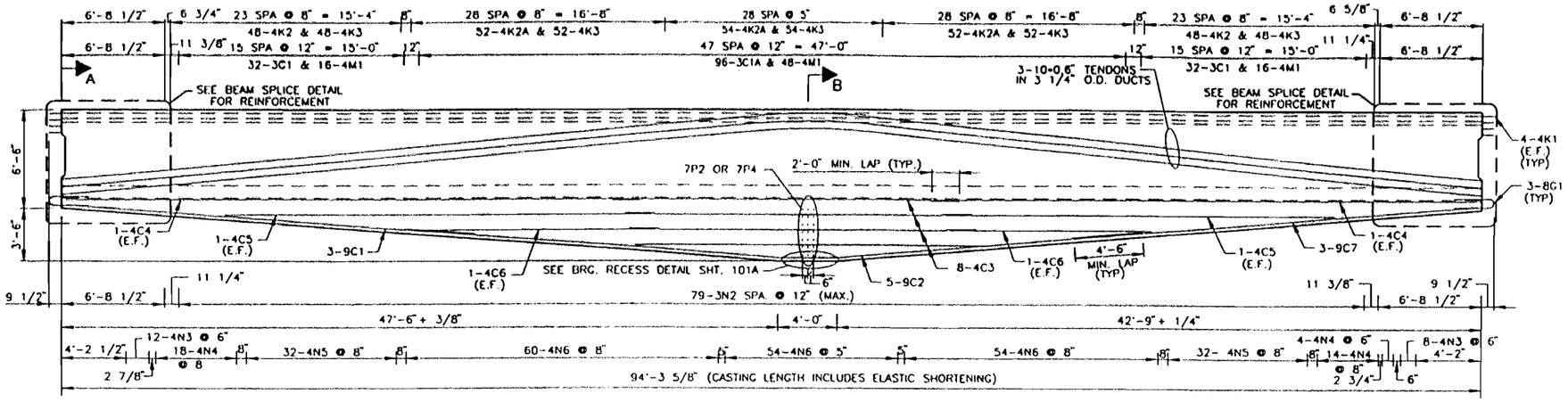

ELEVATION
(16 BEAMS REQUIRED)

BILL OF REINFORCING STEEL
(VALID FOR ONE BEAM)
(BEAM LENGTHS 94'-3 5/8")

BAR MARK	SIZE	No. OF BARS	LENGTH FT. IN.
9C1	#9	3	28'-0"
9C2	#9	5	50'-0"
9C7	#9	3	26'-0"
8G1	#8	6	6'-4"
4C3	#4	8	25'-0"
4C4	#4	4	36'-6"
4C5	#4	4	28'-0"
4C6	#4	4	14'-10"
4K1	#4	16	6'-9"
4K2	#4	152	8'-3 1/2"
4K2A	#4	158	8'-5"
4K3	#4	292	6'-7 1/2"
4M1	#4	107	4'-10"
4N3	#4	20	3'-6 1/2"
4N4	#4	36	3'-10 1/2"
4N5	#4	64	4'-10 1/2"
4N6	#4	168	6'-6 1/2"
3C1	#3	240	3'-6 1/2"
3C1A	#3	192	3'-5"
3N1	#3	56	4'-4 1/4"
3N2	#3	79	5'-3 1/2"

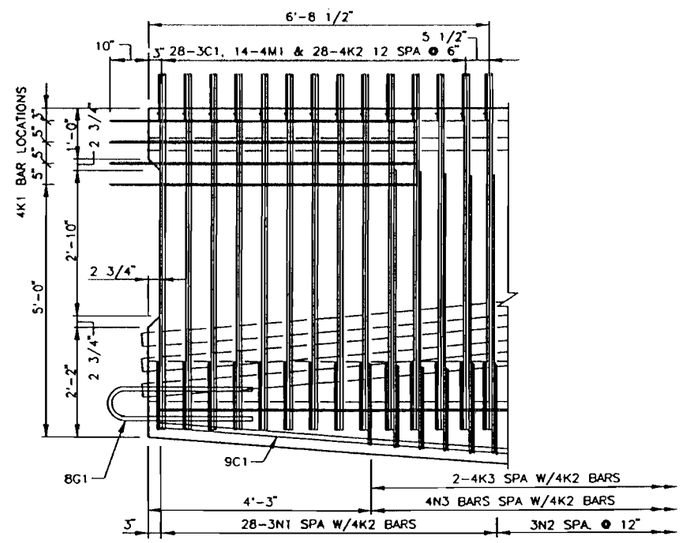

BEAM SPLICE DETAIL

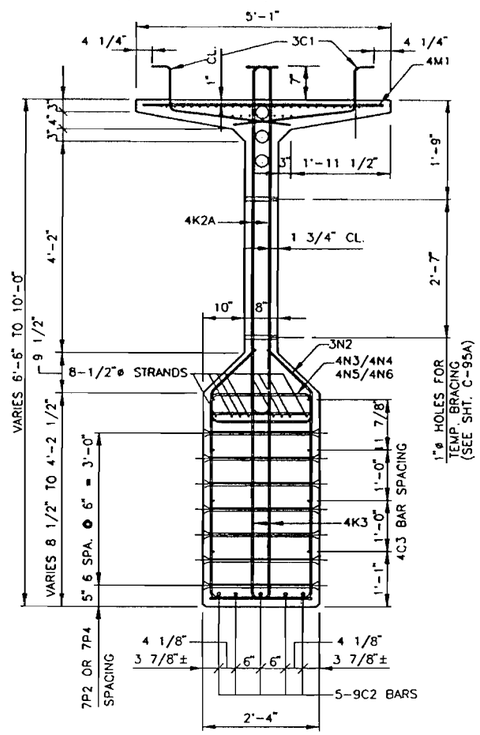

SECTION B

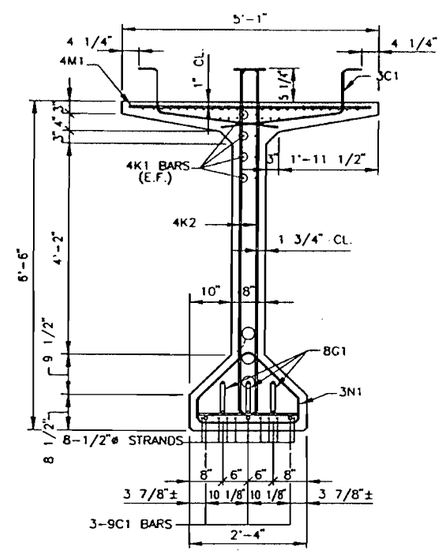

SECTION A
(DIMS. AT BEAM END)

BAR SHAPES

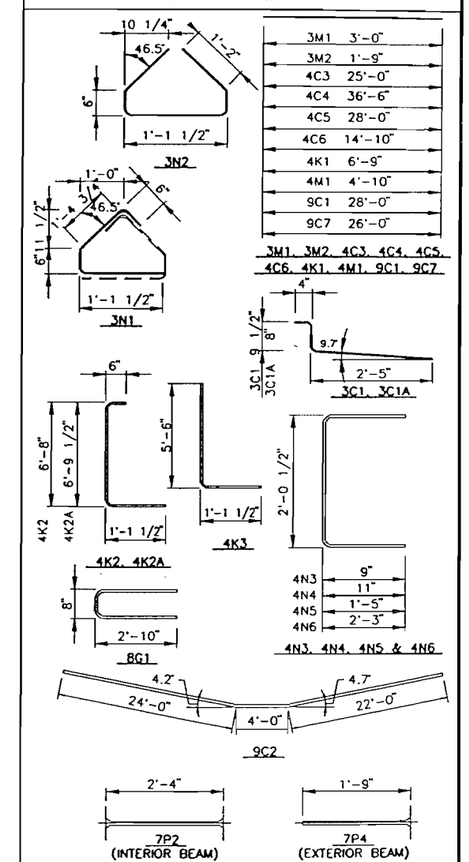

3M1	3'-0"
3M2	1'-9"
4C3	25'-0"
4C4	36'-6"
4C5	28'-0"
4C6	14'-10"
4K1	6'-9"
4M1	4'-10"
9C1	28'-0"
9C7	26'-0"

3M1, 3M2, 4C3, 4C4, 4C5, 4C6, 4K1, 4M1, 9C1, 9C7

MECHANICAL SPLICE BAR DETAILS

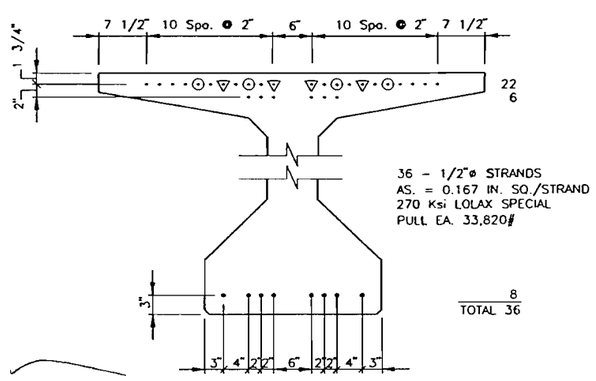

36 - 1/2"ø STRANDS
AS. = 0.167 IN. SQ./STRAND
270 Ksi LOLAX SPECIAL
PULL EA. 33,820#

8
TOTAL 36

STRAND PATTERN
AT END OF GIRDER

⊙ - INDICATES STRANDS DEBONDED OVER 10'-0" EACH END
▽ - INDICATES STRANDS DEBONDED OVER 20'-0" EACH END

NOTE:
- REQUIRED CONCRETE STRENGTH (f'c=6500 psi)
  f'ci @ RELEASE = 4500 psi
  f'ci @ HANDLING = 4500 psi
- BEAMS MUST BE KEPT IN A VERTICAL POSTION AT ALL TIMES.
- ALL LONGITUDINAL BEAM DIMENSIONS ARE MEASURED ALONG THE BOTTOM OF THE BEAM AT CENTERLINE OF BEAM.

Michael J. Hafter
5/3/96

FINLEY McNARY/JANSSEN SPAANS
a Joint Venture

Finley McNary Engineers, Inc
1391 Timberlane Road Suite 200
Tallahassee, Florida 32312-1721

Janssen & Spaans Engineers, Inc.
2825 East 56th Street
Indianapolis, Indiana 46220

REVISIONS

DATE	BY	DESCRIPTION	DATE	BY	DESCRIPTION	DATE	BY	DESCRIPTION	DATE	BY

	NAME	DATE
DR. BY	TAL	1/96
CHK. BY	MJH	1/96
SUPV.	MJH	1/96

FINLEY McNARY/JANSSEN SPAANS

BOARD OF COUNTY COMMISSIONERS
LEE, COUNTY, FLORIDA
DEPARTMENT OF TRANSPORTATION

MIDPOINT BRIDGE
MAIN SPAN UNIT HAUNCH SEGMENT

BX1-105	PROJECT NO.	SHEET NO.
	5896	C-93A

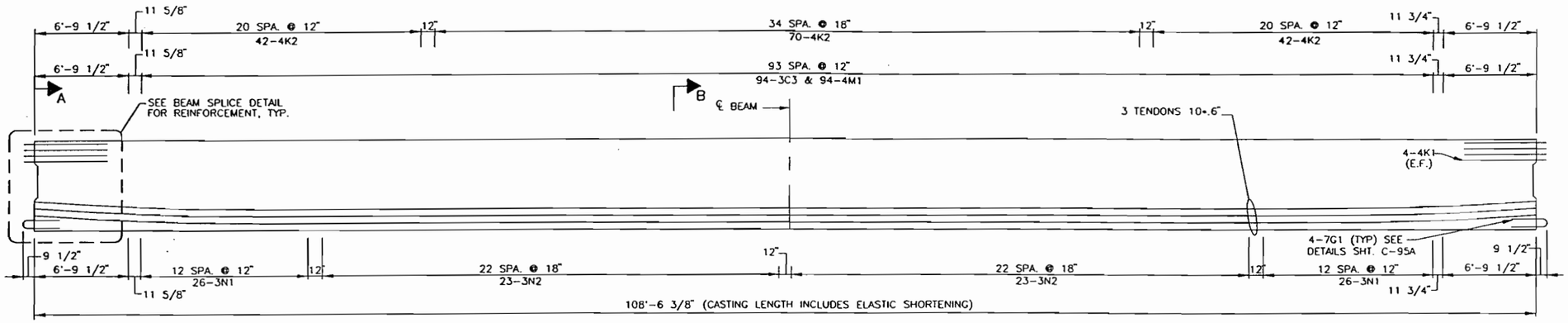

ELEVATION
(8 BEAMS REQUIRED)

BILL OF REINFORCING STEEL
(VALID FOR ONE BEAM)
(BEAM LENGTHS 108'-6 3/8")

BAR MARK	SIZE	No. OF BARS	LENGTH FT. IN.
7G1	#7	8	5'-9"
4K1	#4	16	6'-9"
4K2	#4	214	8'-3 1/2"
4M1	#4	108	4'-10"
3C3	#3	108	5'-9 1/2"
3N1	#3	108	4'-4 1/4"
3N2	#3	46	5'-3 1/2"

BAR SHAPES

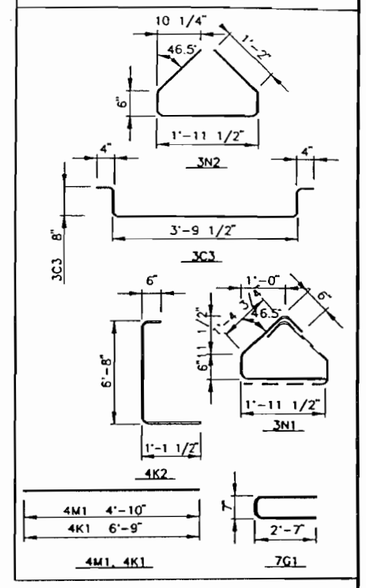

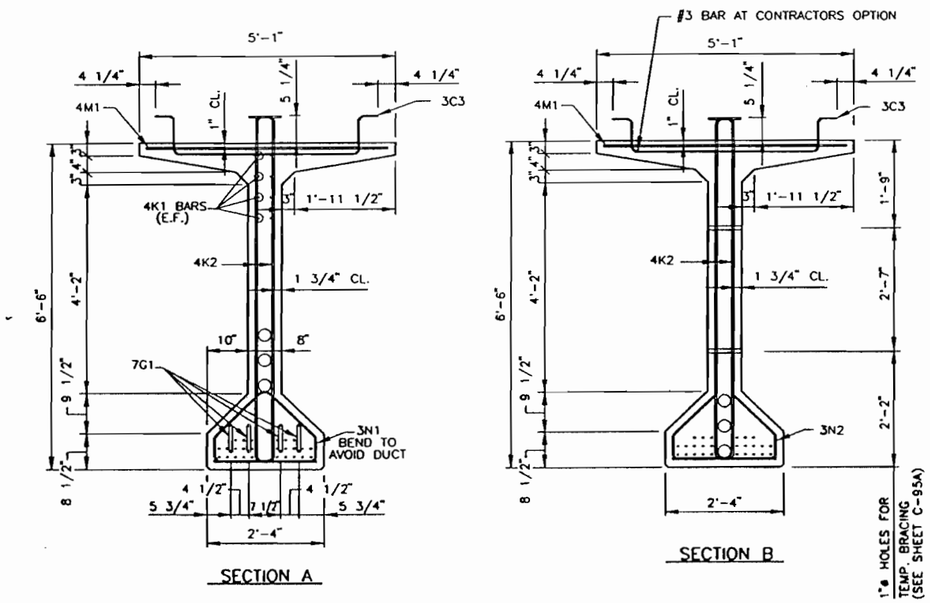

SECTION A

SECTION B

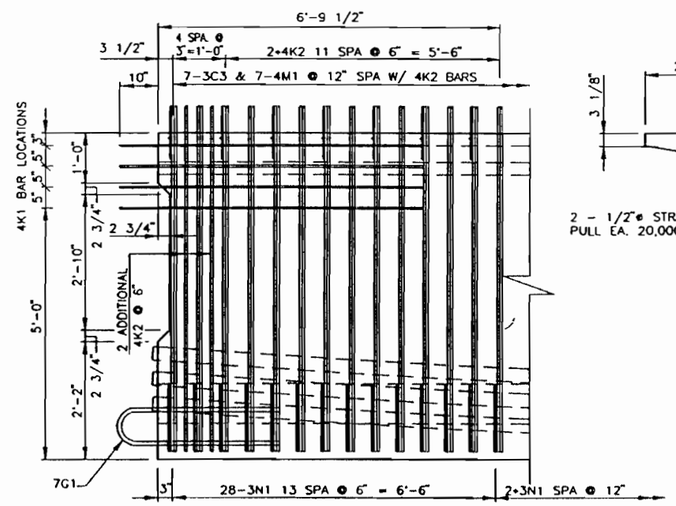

BEAM SPLICE DETAIL

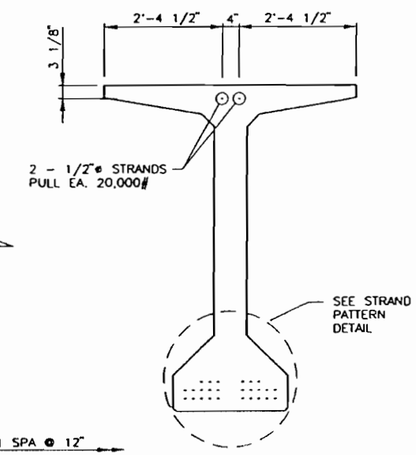

NOTES:

- REQUIRED CONCRETE STRENGTH (f'c=6500 psi)
  f'ci @ RELEASE = 4500 psi
  f'ci @ HANDLING = 4500 psi
- BEAMS MUST BE KEPT IN A VERTICAL POSTION AT ALL TIMES.
- ALL LONGITUDINAL BEAM DIMENSIONS ARE MEASURED ALONG THE BOTTOM OF THE BEAM AT CENTERLINE OF BEAM.
- ALL BAR DIMENSIONS ARE OUT-TO-OUT. BARS SHALL BE BENT AROUND PINS HAVING THE FOLLOWING DIAMETERS FOR RESPECTIVE SIZES:

BAR SIZE	PIN DIAMETERS
#3	1 1/2"
#4	2"
#7	5 1/2"

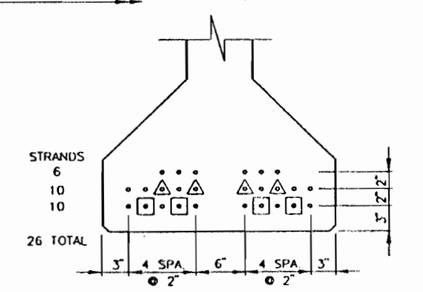

△ - INDICATES STRANDS DEBONDED OVER 15'-0" EACH END
▯ - INDICATES STRANDS DEBONDED OVER 27'-6" EACH END

STRAND PATTERN
26 - 1/2"ø STRANDS
As = 0.167 IN. SQ./STRAND
270 ksi LOLAX SPECIAL
PULL EA. 33,820#

Michael J. Falter
5/13/96

FINLEY McNARY/JANSSEN SPAANS
a Joint Venture

Finley McNary Engineers, Inc
1391 Timberlane Road Suite 200
Tallahassee, Florida 32312-1721

Janssen & Spaans Engineers, Inc
2825 East 56th Street
Indianapolis, Indiana 46220

REVISIONS

DATE	BY	DESCRIPTION	DATE	BY	DESCRIPTION	DATE	BY	DESCRIPTION	DATE	BY

	NAME	DATE
DR. BY	TAL	1/96
CHK. BY	MJH	1/96
SUPV.	MJH	1/96

FINLEY McNARY/JANSSEN SPAANS

BOARD OF COUNTY COMMISSIONERS
LEE, COUNTY, FLORIDA
DEPARTMENT OF TRANSPORTATION

MIDPOINT BRIDGE
MAIN SPAN UNIT DROP-IN-SEGMENT

PROJECT NO.	SHEET NO
5896	C-94A

BX1-106

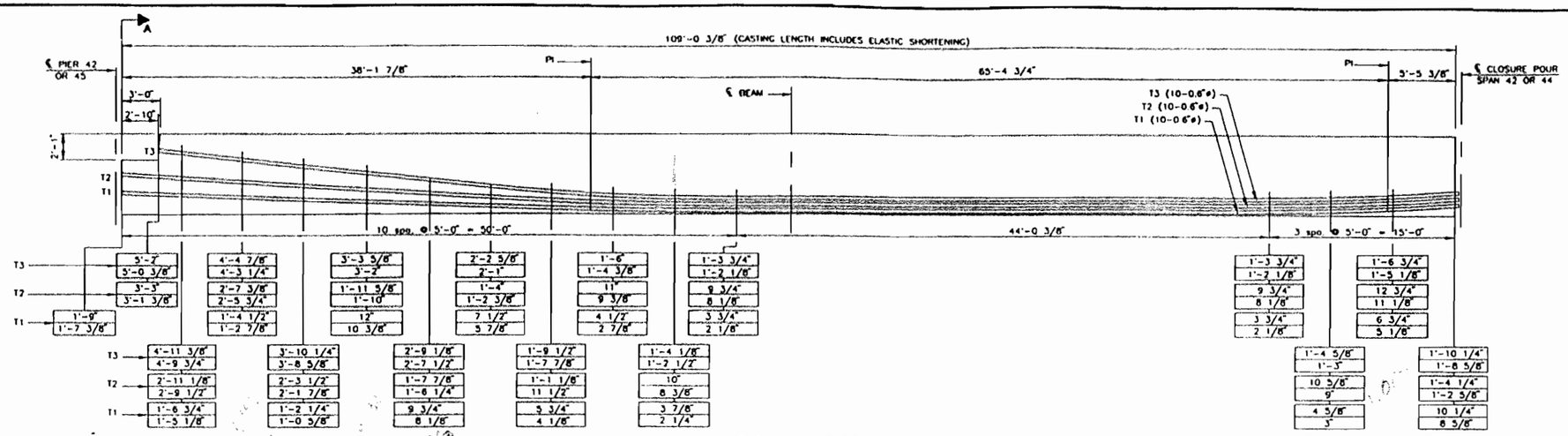

END SEGMENT BEAMS

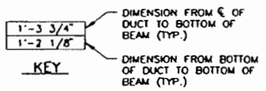

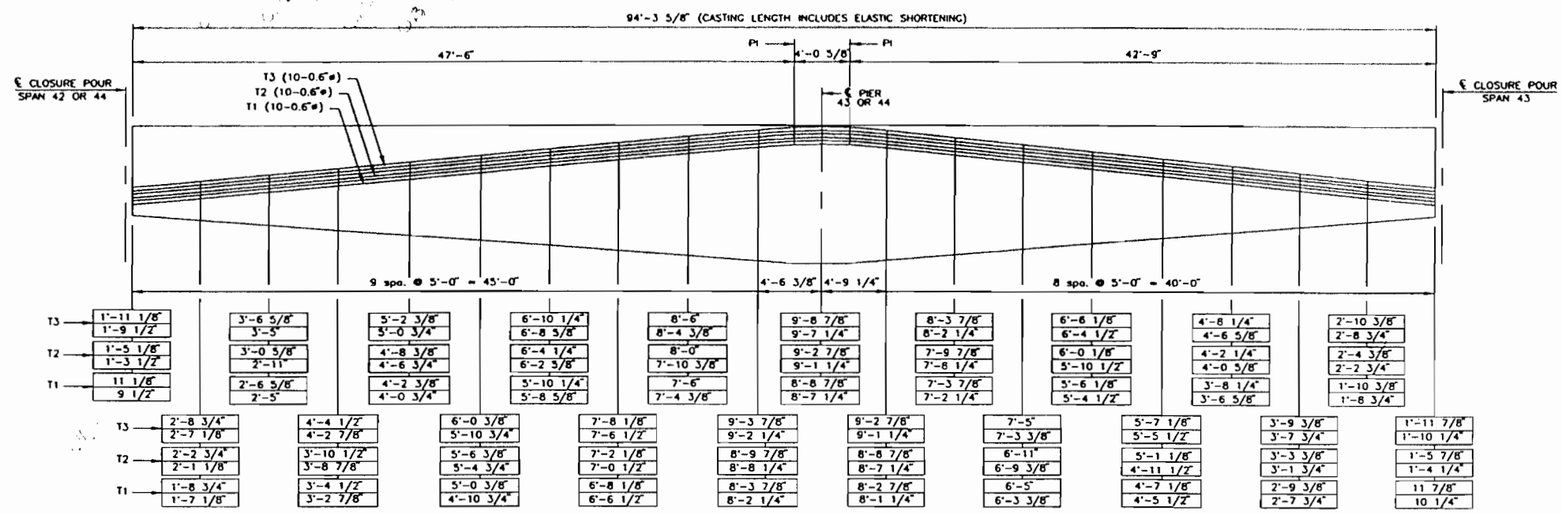

HAUNCH SEGMENT BEAMS

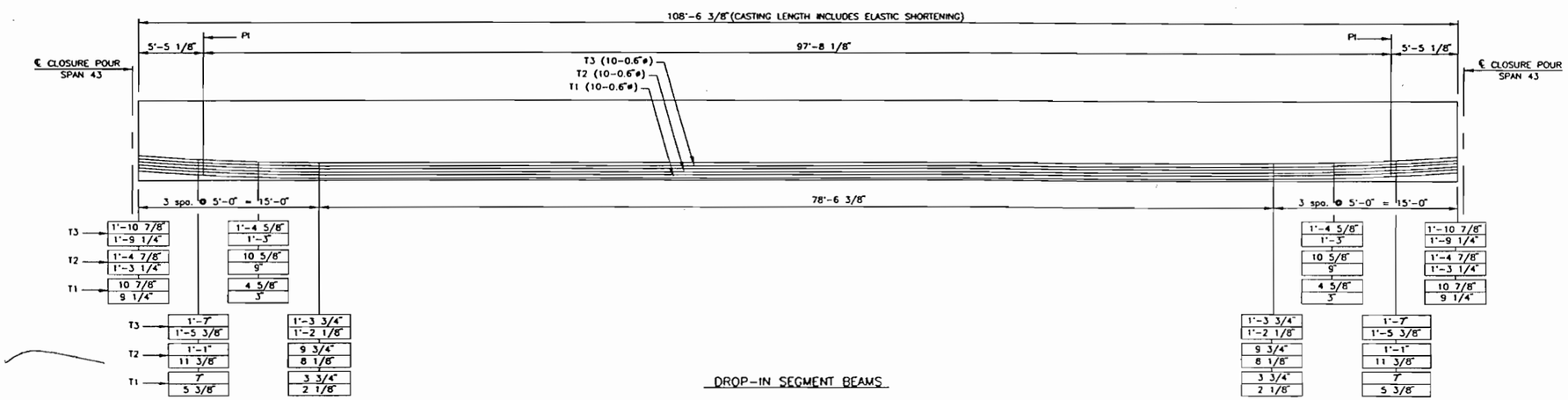

DROP-IN SEGMENT BEAMS

STRESSING INSTRUCTIONS				
TENDON	TENDON SIZE	JACKING FORCE (KIPS)	ELONGATION BEFORE SEATING	ELONGATION AFTER SEATING
1	10-0.6"	468.7	3'-4 9/16"	3'-3 13/16"
2	10-0.6"	468.7	3'-4 3/8"	3'-3 5/8"
3	10-0.6"	468.7	3'-3 5/8"	3'-2 7/8"

ALL TENDONS (1-3) TO BE STRESSED FROM BOTH ENDS.

ASSUMPTIONS: Em = 26,500 kips; FRICTION = 0.25; WOBBLE = 0.0015; ANCHOR SET = 3/8".

IF FIELD CONDITIONS DEVIATE FROM THESE VALUES, ELONGATIONS GIVEN IN THE ABOVE TABLE SHALL BE ADJUSTED ACCORDINGLY.

ELONGATIONS GIVEN ABOVE ARE TOTAL VALUES AFTER STRESSING FROM BOTH ENDS.

DUCT SIZE 3 1/4" O.D.

Michael J. Fletter
5/3/96

FINLEY McNARY/JANSSEN SPAANS

a Joint Venture

Finley McNary Engineers, Inc
1391 Timberlane Road Suite 200
Tallahassee, Florida 32312-1721

Janssen & Spaans Engineers, Inc.
2825 East 56th Street
Indianapolis, Indiana 46220

REVISIONS

DATE	BY	DESCRIPTION	DATE	BY	DESCRIPTION	DATE	BY	DESCRIPTION	DATE	BY

	NAME	DATE
DR. BY	TAL	1/96
CHK. BY	MJH	1/96
SUPV.	MJH	1/96

FINLEY McNARY/JANSSEN SPAANS

BOARD OF COUNTY COMMISSIONERS
LEE COUNTY, FLORIDA
DEPARTMENT OF TRANSPORTATION

MIDPOINT BRIDGE
MAIN SPAN UNIT TENDON LAYOUT

PROJECT NO.	SHEET NO.
5896	C-95A

BX1-107

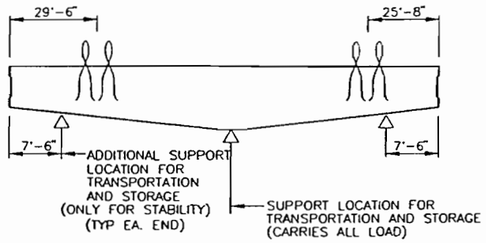

SUPPORT LOCATIONS
TRANSPORTATION STORAGE & LIFTING
(HAUNCH SEGMENT)

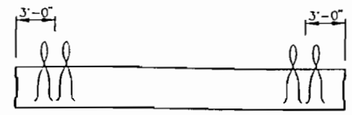

LIFTING

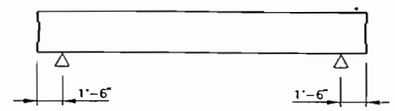

TRANSPORTATION

SUPPORT LOCATIONS
(END SEGMENT AND DROP-IN SEGMENT)

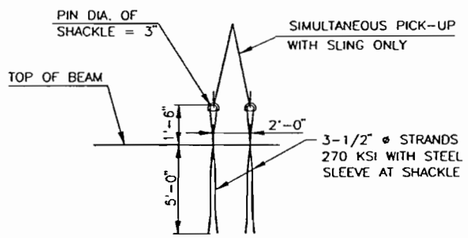

LIFTING LOOP DETAIL
(TYPICAL)

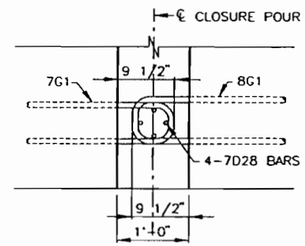

BEAM CONNECTION AT CLOSURE POUR

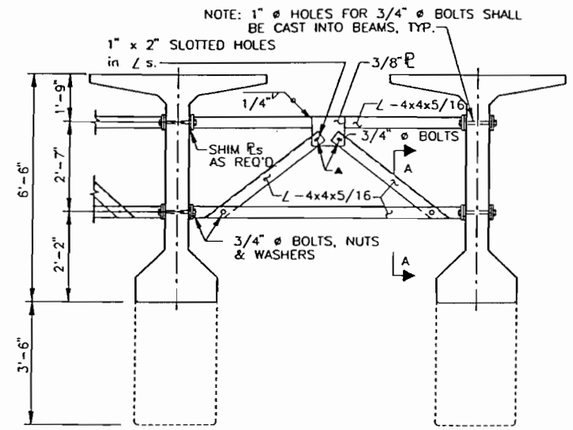

SECTION SHOWING TEMPORARY BRACING

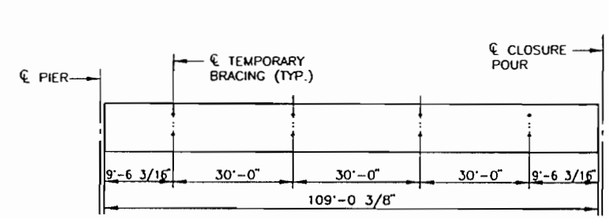

ELEVATION (END BEAM OF MAIN UNIT)

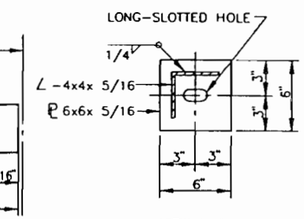

VIEW A-A

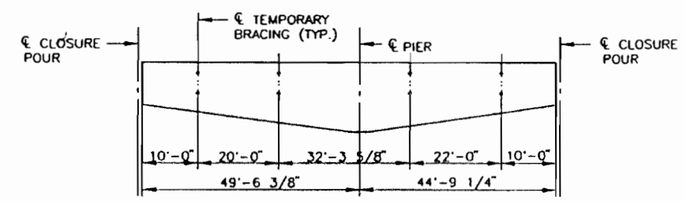

ELEVATION (HAUNCH BEAM OF MAIN UNIT)

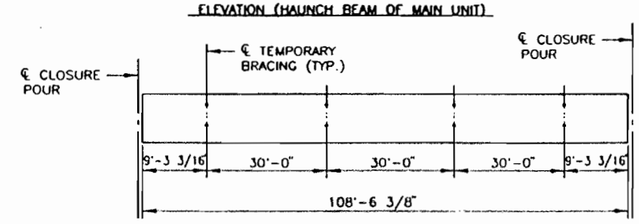

ELEVATION (DROP-IN BEAM OF MAIN UNIT)

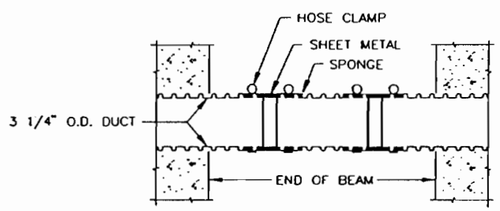

SUGGESTED DUCT SPLICE

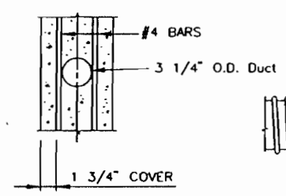

DUCT IN BEAM WEB

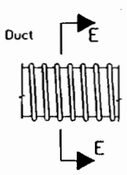

PLAN VIEW

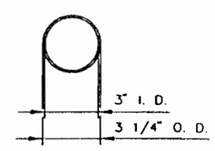

SECTION E-E

POST-TENSIONING DUCT DETAILS

HIGH LEVEL UNIT					
UNIT	SPAN NO.	END CONDITION	DIMENSION "P" LEFT END	DIMENSION "P" RIGHT END	CASTING LENGTH "L" (SEE NOTE BELOW)
"L"	END SEGMENT	2	1 1/8"	1 1/16"	109'-0 3/8"
	HAUNCH SEGMENT	4	3/16"	3/4"	94'-3 5/8"
	DROP-IN SEGMENT	1	5/16"	1/4"	108'-6 3/8"
	HAUNCH SEGMENT	5	11/16"	3/16"	94'-3 5/8"
	END SEGMENT	3	3/4"	13/16"	109'-0 3/8"

NOTE: CASTING LENGTH "L" INCLUDES COMPENSATION FOR ELASTIC AND TIME-DEPENDENT SHORTENING EFFECTS. AGE AT ERECTION IS ASSUMED TO BE 120 DAYS.

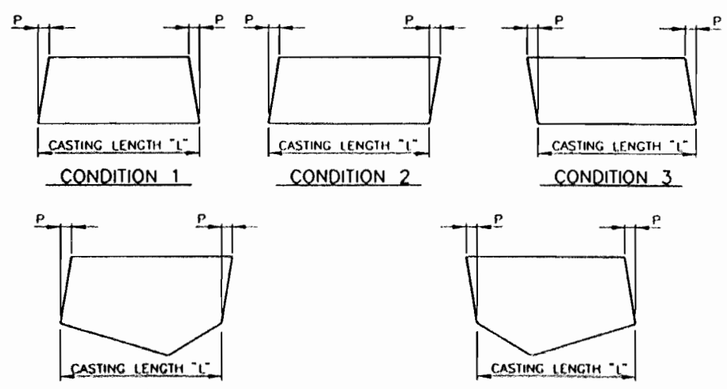

END ELEVATIONS OF BEAM
(SHOWING VERTICAL BEVEL OF BEAM END)

NOTES:

1. PAYMENT FOR BRACING TO BE INCLUDED IN THE PRICE BID FOR BEAMS.
2. SEE SHEET C-98A, ERECTION SEQUENCE FOR TEMPORARY BRACING INSTALLATION REQUIREMENTS.
3. AFTER REMOVAL OF TEMPORARY BRACING, THE HOLES IN THE BEAMS SHALL BE FILLED WITH NON-SHRINK GROUT. THE MATERIAL REQUIRES APPROVAL OF THE ENGINEER.

Michael J. Halter
5/31/96

FINLEY McNARY/JANSSEN SPAANS
a Joint Venture
Finley McNary Engineers, Inc.
1391 Timberlane Road Suite 200
Tallahassee, Florida 32312-1721
Janssen & Spaans Engineers, Inc.
2825 East 56th Street
Indianapolis, Indiana 46220

REVISIONS

DATE	BY	DESCRIPTION	DATE	BY	DESCRIPTION	DATE	BY	DESCRIPTION	DATE	BY

	NAME	DATE
DR. BY	TAL	1/96
CHK. BY	MJH	1/96
SUPV	MJH	1/96

FINLEY McNARY/JANSSEN SPAANS

BOARD OF COUNTY COMMISSIONERS
LEE COUNTY, FLORIDA
DEPARTMENT OF TRANSPORTATION

MIDPOINT BRIDGE
MAIN SPAN UNIT
BEAM DETAILS (1)

NOTE: PRESTRESSED STRAND PATTERNS SHOWN ARE FOR HIGH-LEVEL APPROACH BEAMS. ARRANGEMENT A AND B ARE TYPICAL FOR BOTH HIGH-LEVEL APPROACH UNITS AND MAIN SPAN UNIT.

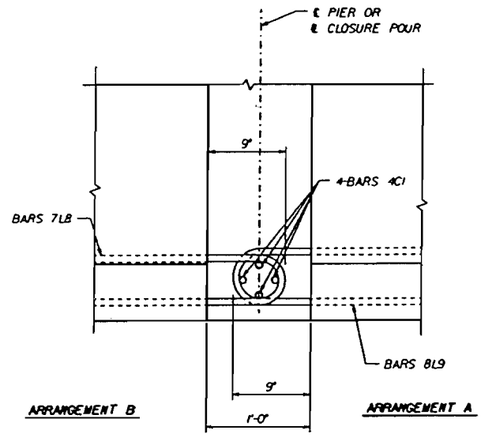

SIDE VIEW

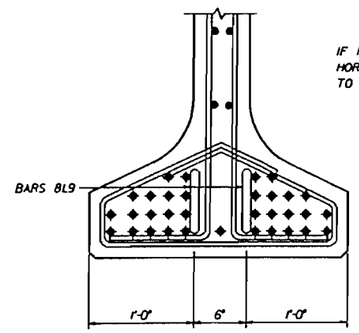

ARRANGEMENT A

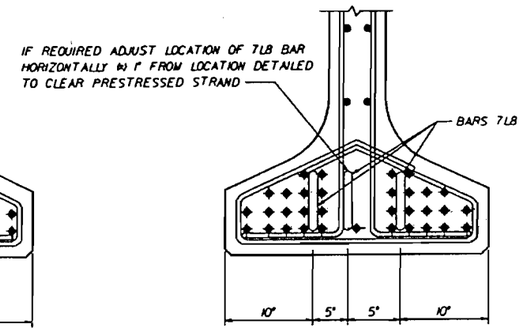

ARRANGEMENT B

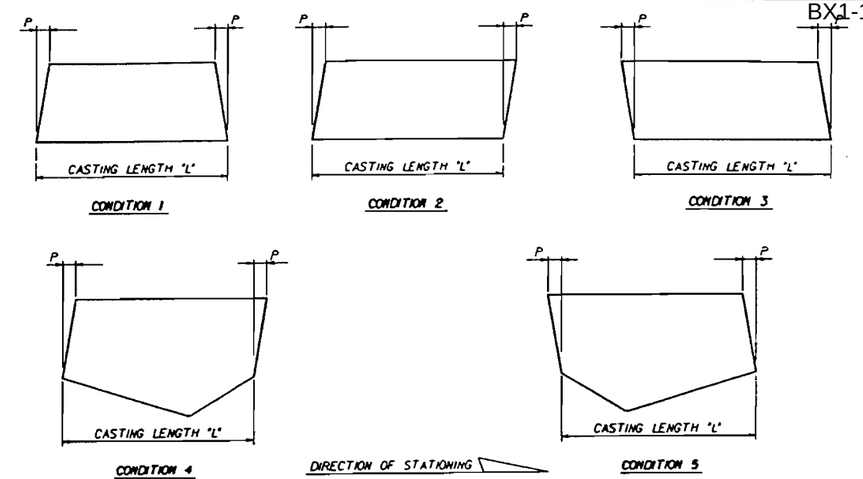

END ELEVATIONS OF BEAM
(SHOWING VERTICAL BEVEL OF BEAM END)

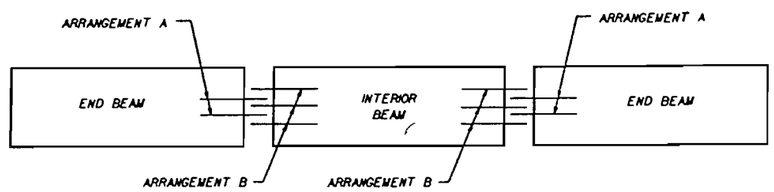

UNITS I, J, N, P

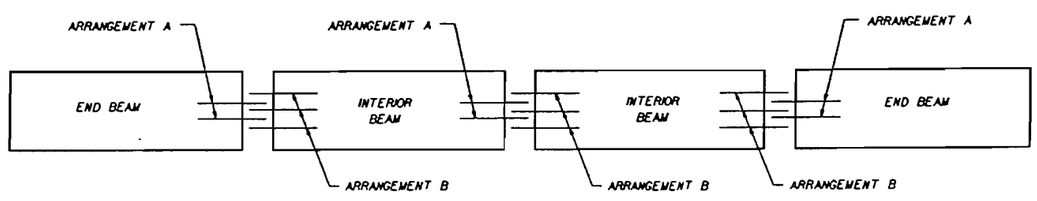

UNITS K AND M

PLAN OF HIGH-LEVEL APPROACH UNITS
(SHOWING LOCATION OF BAR ARRANGEMENTS A & B)

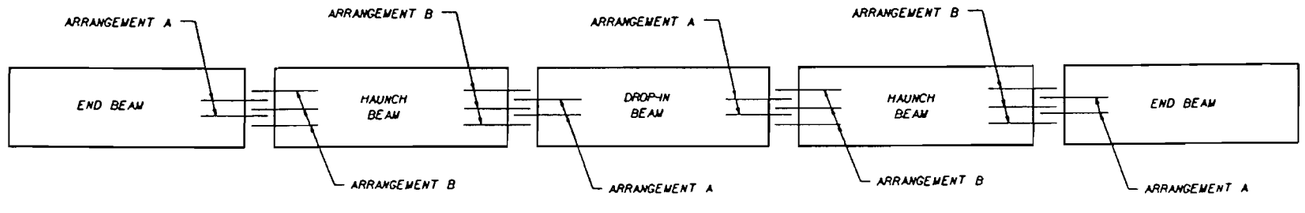

PLAN OF MAIN SPAN UNIT
(SHOWING LOCATION OF BAR ARRANGEMENTS A & B)

HIGH LEVEL APPROACH AND MAIN SPAN UNITS

UNIT	SPAN NO.	END CONDITION	DIMENSION "P" LEFT END	DIMENSION "P" RIGHT END	CASTING LENGTH "L" (SEE NOTE BELOW)
I	32	2	1 3/16"	1 1/4"	143'-10 1/2"
	33	2	2 1/4"	1 3/4"	143'-10 3/4"
	34	2	2 1/2"	1 3/4"	143'-10 3/4"
J	35	2	2 1/2"	2"	143'-11"
	36	2	2 1/4"	1 3/4"	143'-10 3/4"
	37	2	2 1/2"	1 3/4"	143'-10 3/4"
K	38	2	2 1/2"	1 3/4"	143'-10 3/4"
	39	2	2 1/2"	2"	143'-11"
	40	2	2 1/4"	1 3/4"	143'-10 3/4"
	41	2	1 3/16"	1 1/4"	143'-10 1/2"
L	END SEGMENT	2	1 1/4"	3/4"	109'-0 3/4"
	HAUNCH SEGMENT	4	3/8"	7/8"	94'-0 1/4"
	DROP-IN SEGMENT	1	1/4"	1/4"	109'-0 3/4"
	HAUNCH SEGMENT	5	7/8"	3/8"	94'-0 1/4"
	END SEGMENT	3	3/4"	1 1/4"	109'-0 3/4"
M	45	3	1 1/4"	1 3/4"	143'-10 1/2"
	46	3	1 3/4"	2 1/4"	143'-10 3/4"
	47	3	2"	2 1/2"	143'-11"
	48	3	1 3/4"	2 1/2"	143'-10 3/4"
N	49	3	1 3/4"	2 1/2"	143'-10 3/4"
	50	3	1 3/4"	2 1/4"	143'-10 3/4"
	51	3	2"	2 1/2"	143'-11"
P	52	3	1 3/4"	2 1/2"	143'-10 3/4"
	53	3	1 3/4"	2 1/4"	143'-10 3/4"
	54 BEAMS 1-6	3	1 1/4"	1 3/4"	143'-10 1/2"
	54 BEAM 7	3	r	1 3/4"	143'-10 1/2"
	54 BEAMS 8,9	3	r	1 1/2"	143'-10 1/4"

NOTE: TO COMPENSATE FOR ELASTIC AND TIME-DEPENDENT SHORTENING EFFECTS. CASTING LENGTH "L" INCLUDES 1/2" FOR UNIT L SEGMENTS AND 3/4" FOR ALL OTHER BEAMS. AGE AT ERECTION IS ASSUMED TO BE 90 DAYS.

R Flanell 1-11-95

REVISIONS

DATE	BY	DESCRIPTION	DATE	BY	DESCRIPTION	DATE	BY	DESCRIPTION	DATE	BY	DESCRIPTION

	NAME	DATE
DR. BY	HMG	7/94
CHK. BY	MCM	7/94
SUPV.	REJ	3/94

Greiner Engineering, Inc. Tampa, Florida — Engineers, Architects and Planners

BOARD OF COUNTY COMMISSIONERS
LEE COUNTY, FLORIDA
DEPARTMENT OF TRANSPORTATION

MIDPOINT BRIDGE
HIGH-LEVEL APPROACH AND MAIN SPAN UNIT
BEAM DETAILS (2)

SIGNAT. C:\26\000.CADD.FG\BGRDWPD9.FGBW
FRLECCTY
PLOTTED: ORFER95-13.53.30

DISK:&DRAW: C2B1000.CADD.FG | BGROWPO4.FGBW

BILL OF REINFORCING STEEL (PER BEAM)

HIGH-LEVEL APPROACH UNITS (HLAU)

MARK SIZE	MARK DES	NO. REQUIRED	LENGTH
END SPAN (108 REQUIRED)			
4	D1	74	6 - 2
4	D5	69	5 - 0
4	K1	426 (SEE NOTE 1)	7 - 9
4	K7	15	14 - 5 (SEE NOTE 2)
5	K8	13	14 - 5 (SEE NOTE 2)
4	K9	4	VARIES 13-4TO14-0(SEE NOTE 2
4	L1	26	19 - 3
4	L5	14	3 - 1
4	L6	4	151 - 0
8	L9	2	6 - 1
4	M1	118	3 - 0
4	M2	72	2 - 0
5	N1	52	5 - 2
4	N2	6	7 - 0
4	N3	6	2 - 6
4	N4	12	5 - 9
4	N5	4	5 - 0
4	N6	56	3 - 11
4	S1	3	20 - 2
7	P2	4*	2 - 6
7	P4	7**	1 - 9
4	K11	176 (SEE NOTE 1)	7 - 11
* GIRDERS 2 THRU 8 ONLY ** GIRDERS 1 & 9 ONLY			
INTERIOR SPAN (72 REQUIRED)			
4	D1	168	6 - 2
4	K1	576	7 - 9
4	L5	28	3 - 1
4	L6	4	151 - 0
7	L8	*	5 - 5
8	L9	*	6 - 1
4	M1	114	3 - 0
4	M2	52	2 - 0
* SEE SHEET C-96			

NOTE: EACH BAR 4L6 MAY BE REPLACED BY ONE ASTM A-416 GRADE 250 OR 270 SEVEN WIRE STRAND 3/8" ϕ OR LARGER. STRESSED TO 10,000 LB. EACH.

NOTE 1. FOR SPAN 54 GIRDERS 1 THRU 9. SUBSTITUTE 176-4K11 FOR 176-4K1.

2. FOR SPAN 54 GIRDERS 1 THRU 9. SEE MSU BILL OF REINFORCING STEEL FOR "LENGTH" OF BARS 4K7. 5K8. 4K9.

MAIN SPAN UNITS (MSU)

MARK SIZE	MARK DES	NO. REQUIRED	LENGTH
END SEGMENT (18 REQUIRED)			
4	D1	28	6 - 2
4	D5	77	5 - 0
4	K1	196	7 - 9
4	K7	15	14 - 11
5	K8	13	14 - 11
4	K9	4	VARIES 13 - 10 TO 14 - 6
5	K10	8	7 - 9
4	L1	26	19 - 3
4	L5	4	3 - 1
4	L6	4	116 - 2
8	L9	2	6 - 1
4	M1	111	3 - 0
4	M2	46	2 - 0
5	N1	52	5 - 2
4	N2	6	7 - 0
4	N3	6	2 - 6
4	N4	12	5 - 9
4	N5	4	5 - 0
4	N6	56	3 - 11
4	S1	3	20 - 2
7	P2	4*	2 - 6
7	P4	7**	1 - 9
* GIRDER 2 THRU 8 ONLY ** GIRDERS 1 & 9 ONLY			
HAUNCH SEGMENT (18 REQUIRED)			
4	D2	31	VARIES 7 - 2 TO 11 - 10
4	D3	2	11 - 10
4	D4	34	VARIES 7 - 2 TO 11 - 10
4	D6	10	VARIES 6 - 2 TO 7 - 3
4	D7	10	VARIES 6 - 2 TO 7 - 5
4	K1	12	7 - 9
4	K2	2 SETS OF 20	VARIES 7 - 9 TO 8 - 4
5	K3	2 SETS OF 75	VARIES 8 - 5 TO 10 - 11
5	K4	14	10 - 11
5	K5	2 SETS OF 65	VARIES 10 - 11 TO 8 - 6
4	K6	2 SETS OF 20	VARIES 8 - 5 TO 7 - 8
6	L2	4	89 - 7
8	L3	8	28 - 7
8	L4	4	42 - 3
4	L5	8	3 - 1
7	L8	6	5 - 5
4	L10	2	56 - 0
4	L11	2	24 - 0
4	M1	70	3 - 0
4	M2	64	2 - 0
3	M3	12	2 - 10
7	P2	21*	2 - 6
7	P4	63**	1 - 9
* GIRDERS 2 THRU 8 ONLY (14 HAUNCH SEGMENTS REQ'D.) ** GIRDERS 1 AND 9 ONLY (4 HAUNCH SEGMENTS REQ'D.)			
DROP-IN-SEGMENT (9 REQUIRED)			
4	D1	46	6 - 2
4	D5	70	5 - 0
4	K1	280	7 - 9
5	K10	16	7 - 9
4	L5	8	3 - 1
4	L6	4	116 - 2
8	L9	4	6 - 1
4	M1	109	3 - 0

NOTE: EACH BAR 4L6 MAY BE REPLACED BY ONE ASTM A-416 GRADE 250 OR 270 SEVEN WIRE STRAND 3/8" ϕ OR LARGER. STRESSED TO 10,000 LB. EACH.

REINFORCING STEEL NOTES:

1. ALL BAR DIMENSIONS ARE OUT TO OUT.
2. BARS SHALL BE BENT AROUND PINS HAVING THE FOLLOWING DIAMETERS FOR THE RESPECTIVE SIZES:

BAR SIZE	PIN DIAMETER
#3	1"
#4	2"
#5	3¾"
#6	4½"
#7	5¼"
#8	6"
#9	9"

BENDING DIAGRAMS (1)

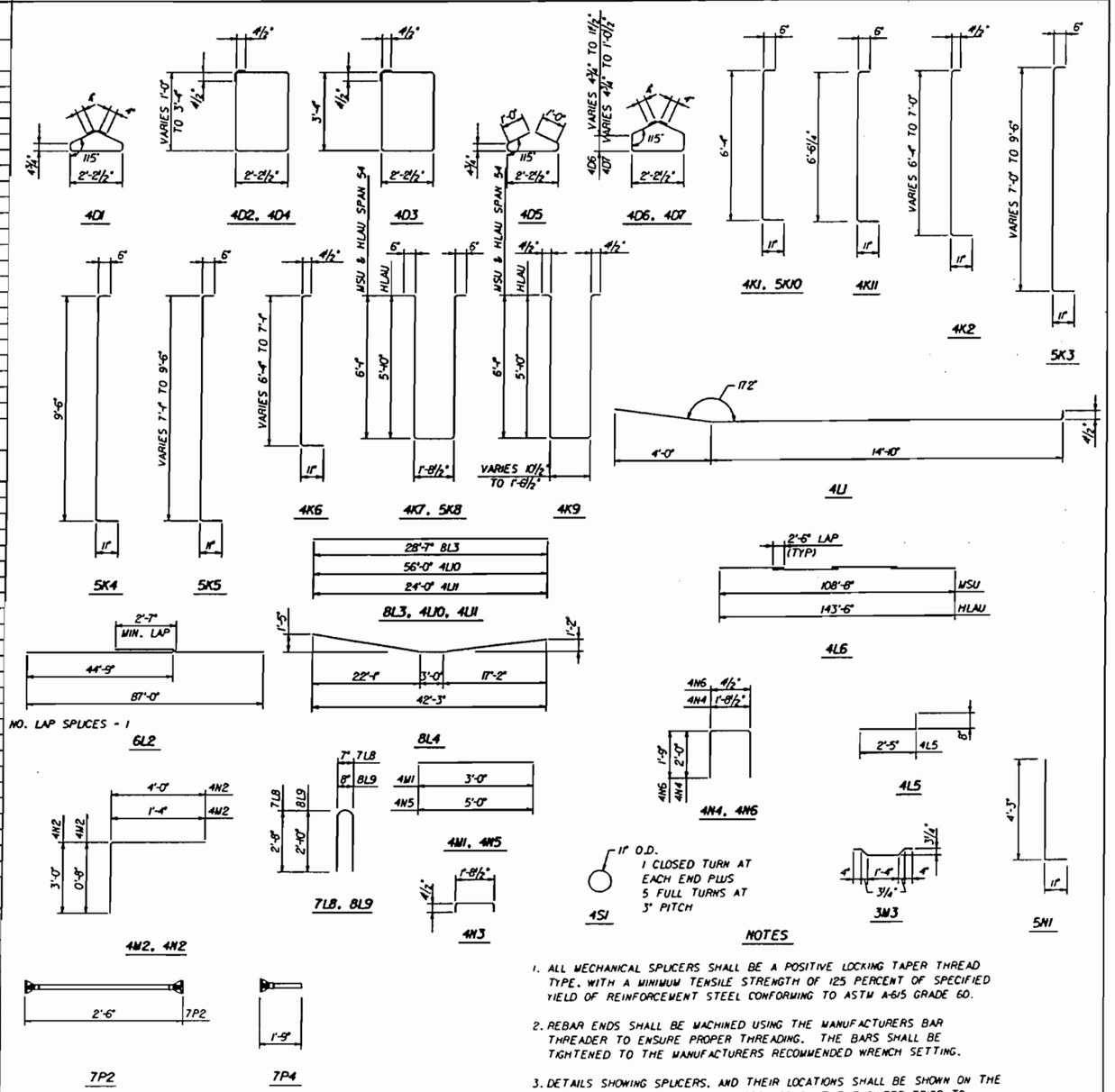

NOTES

1. ALL MECHANICAL SPLICERS SHALL BE A POSITIVE LOCKING TAPER THREAD TYPE, WITH A MINIMUM TENSILE STRENGTH OF 125 PERCENT OF SPECIFIED YIELD OF REINFORCEMENT STEEL CONFORMING TO ASTM A-615 GRADE 60.
2. REBAR ENDS SHALL BE MACHINED USING THE MANUFACTURERS BAR THREADER TO ENSURE PROPER THREADING. THE BARS SHALL BE TIGHTENED TO THE MANUFACTURERS RECOMMENDED WRENCH SETTING.
3. DETAILS SHOWING SPLICERS, AND THEIR LOCATIONS SHALL BE SHOWN ON THE SHOP DRAWINGS AND SHALL BE APPROVED BY THE ENGINEER PRIOR TO CASTING THE BEAM.

WORK THIS SHEET WITH SHEETS C-88 THRU C-94

5-11-95

FILECCTY

REVISIONS											
DATE	BY	DESCRIPTION	DATE	BY	DESCRIPTION	DATE	BY	DESCRIPTION	DATE	BY	DESCRIPTION

	NAME	DATE
DR. BY	MDD	8/93
CHK. BY	MCW	6/94
SUPV.	REJ	8/93

Greiner, Inc. Tampa, Florida — Engineers, Architects and Planners

BOARD OF COUNTY COMMISSIONERS
LEE COUNTY, FLORIDA
DEPARTMENT OF TRANSPORTATION

MIDPOINT BRIDGE
HIGH-LEVEL APPROACH AND MAIN SPAN UNIT
SPECIAL REBAR LIST

PLOTTED: 09FEB95-13:32:20

PROJECT NO.	SHEET NO
5896	C-98A

BX1-110

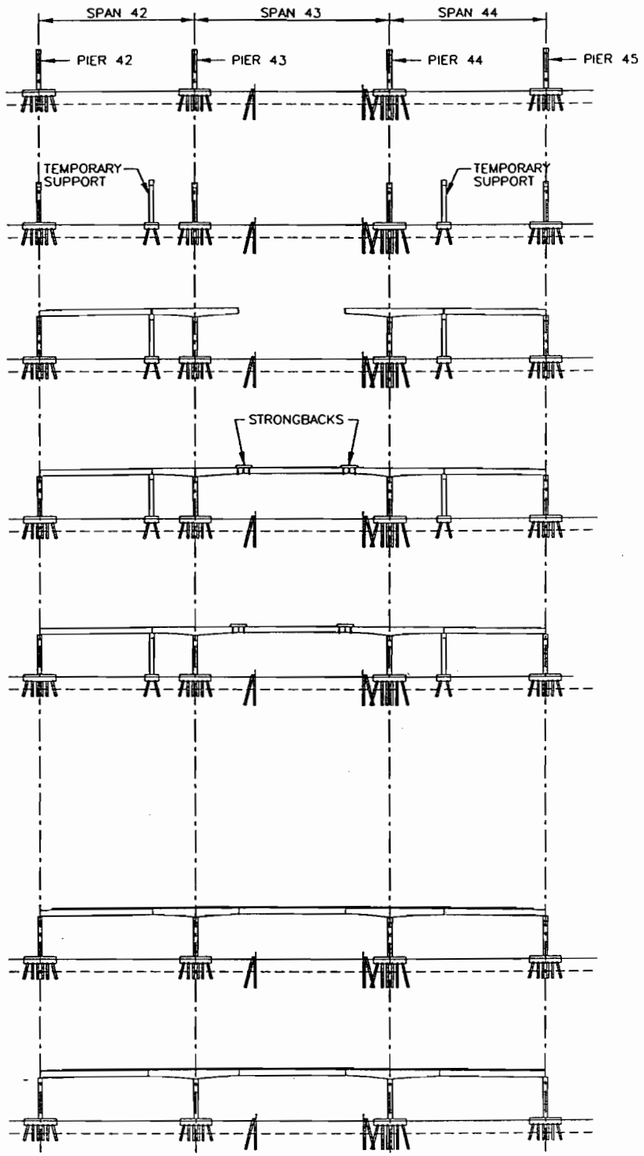

ERECTION SEQUENCE FOR MAIN SPAN UNIT

STEP 1 CONSTRUCT PIERS 42 THRU 45 AND FENDER SYSTEM PILES

STEP 2 ERECT TEMPORARY SUPPORTS IN SPANS 42 AND 44.

STEP 3 (DAY 120) ERECT HAUNCH SEGMENT BEAMS AND SECURE TO TEMPORARY SUPPORTS. BEAM CONNECTIONS TO TEMPORARY SUPPORT SHALL BE CAPABLE OF TRANSMITTING REACTIONS SHOWN IN STEP 4. INSTALL TEMPORARY BRACING BETWEEN BEAMS AS ADJACENT BEAMS ARE ERECTED. ERECT END SEGMENT BEAMS. SECURE END SEGMENT BEAMS TO TEMPORARY SUPPORTS AND PIERS 42 AND 45 TO TRANSMIT TRANSVERSE WIND FORCES ASSUMING BEARINGS AT PIERS 42 AND 45 PROVIDE NO TRANSVERSE SUPPORT. WHEN ERECTING FIRST SEGMENT (HAUNCH OR END), SEGMENT SHALL BE SECURED TRANSVERSELY TO ENSURE STABILITY UNTIL ADJACENT BEAM IS ERECTED AND TEMPORARY BRACING PLACED.
REACTIONS ON TEMPORARY SUPPORTS, PER BEAM: (EXCLUDING CONSTRUCTION LOADS)
HAUNCH SEGMENT = 9 KIPS (DOWNWARD)
END SEGMENT = 68 KIPS (DOWNWARD)
REACTIONS SHOWN SHALL BE ADJUSTED FOR ANY CONSTRUCTION LOADS PROPOSED BY THE CONTRACTOR.

STEP 4 ATTACH STEEL STRONG-BACKS TO EACH END OF DROP-IN SEGMENT BEAMS. ERECT DROP-IN SEGMENT BEAMS AND CONNECT STRONG-BACKS TO HAUNCH SEGMENT BEAMS. INSTALL TEMPORARY BRACING BETWEEN BEAMS AS BEAMS ARE ERECTED.
REACTIONS ON TEMPORARY SUPPORTS, PER BEAM: (EXCLUDING CONSTRUCTION LOADS)
HAUNCH SEGMENT = 58 KIPS (UPWARD)
END SEGMENT = 68 KIPS (DOWNWARD)
REACTION ON STRONG-BACK PER BEAM: (EXCLUDING CONSTRUCTION LOADS)
DROP-IN SEGMENT = 67 KIPS (EXCLUDING CONSTRUCTION LOADS)
REACTIONS SHOWN SHALL BE ADJUSTED FOR ANY CONSTRUCTION LOADS PROPOSED BY THE CONTRACTOR, INCLUDING THE WEIGHT OF STRONG-BACKS.

STEP 5 (DAY 150) CAST CLOSURE POURS (WITH INTERMEDIATE DIAPHRAGMS) IN SPANS 42 AND 44 FIRST, AND THEN CAST CLOSURE POURS (WITH INTERMEDIATE DIAPHRAGMS) IN SPAN 43. CAST DIAPHRAGMS AT PIER 43 AND 44 AND LOWER PORTION OF DIAPHRAGMS AT PIERS 42 AND 45. CAST SHEAR KEYS ON PIERS 42 THRU 45.

STEP 6 FIRST STAGE POST-TENSIONING: AFTER CLOSURE POURS IN SPANS 42, 43 AND 44 HAVE ATTAINED DESIGN STRENGTH OF 4500 PSI, STRESS TENDON NO. 1. STRESS BEAM NO. 1 FIRST, THEN PROCEED SEQUENTIALLY TO BEAM 8 LAST (OR VICE VERSA). FOR BEAM NUMBERS SEE SHEET NO. C-53A. AFTER TENDON NO. 1 IS STRESSED 30% OF ULTIMATE FORCE, IN GIVEN BEAM , THAT BEAM SHALL BE RELEASED FROM TEMPORARY SUPPORTS IN SPAN 42 AND 44. THEN TENDON IN GIVEN BEAM SHALL BE STRESSED TO FULL ANCHOR FORCE BEFORE PROCEEDING TO NEXT BEAM. AFTER TENDON NO. 1 IS STRESSED IN ALL BEAMS. STRESS TENDON NO. 2 TO FULL ANCHOR FORCE, UTILIZING THE SAME BEAM ORDER AS SPECIFIED ABOVE.

STEP 7 GROUT TENDONS NO.1 AND NO.2. DO NOT APPLY OR REMOVE LOADS UNTIL THE GROUT HAS REACHED A MINIMUM STRENGTH OF 2500 PSI. COMPLETELY REMOVE TEMPORARY SUPPORTS AND THE TEMPORARY SUPPORT PILING IN SPANS 42 AND 44.

STEP 8 (DAY 180) REMOVE STEEL STRONG-BACKS. ERECT DECK FORMS IN SPANS 42 THROUGH 44. CAST DECK POURS 1 THRU 5 AS SHOWN ON SHEET NO. C-74A. REMOVE DECK FORMS AND TEMPORARY BRACING AFTER DECK CONCRETE HAS ATTAINED A STRENGTH OF 2500 PSI.

STEP 9 SECOND STAGE POST-TENSIONING: STRESS TENDON NO. 3 UTILIZING THE SAME BEAM ORDER AS SPECIFIED ABOVE, TO FULL ANCHOR FORCE AFTER THE DECK CONCRETE HAS ATTAINED A STRENGTH OF 3400 PSI, THEN GROUT TENDON NO. 3. DO NOT APPLY OR REMOVE LOADS UNTIL THE GROUT HAS REACHED A MINIMUM STRENGTH OF 2500 PSI.

STEP 10 CAST DECK POUR 6, AS SHOWN ON SHEET NO. C-74, FILLING ANCHORAGE BLOCKOUTS AND UPPER PORTIONS OF END DIAPHRAGMS AT PIERS 42 AND 45 WITH CLASS II CONCRETE (BRIDGE DECK). PLACE BARRIERS.

NOTES

1. PRIOR TO POST-TENSIONING OPERATIONS ON MAIN SPAN UNIT, ALL SHEAR KEYS ON FIXED PIERS (PIERS 43 AND 44) SHALL BE IN PLACE AND SHEAR KEY CONCRETE SHALL HAVE MINIMUM STRENGTH OF 3400 PSI.
2. IF THE CONTRACTOR CHOOSES TO USE A CONSTRUCTION SEQUENCE OTHER THAN THE ONE SUGGESTED IN THIS DRAWING, HE SHALL SUBMIT HIS CONSTRUCTION SEQUENCE TO THE ENGINEER FOR APPROVAL.
3. COST OF ADDITIONAL MATERIAL RESULTING FROM AN UNSPECIFIED CONSTRUCTION SEQUENCE CHOSEN BY THE CONTRACTOR SHALL BE BORNE BY THE CONTRACTOR.
4. DESIGN AND DETAILING RELATED TO TIME DEPENDANT EFFECTS OF CREEP AND SHRINKAGE, WERE BASED ON CASTING OF GIRDERS AT DAY 0 AND COMPLETION OF EACH CONSTRUCTION STAGE AS SHOWN. IF THE CONTRACTOR VARIES CONSTRUCTION BY (±) 30 DAYS FROM THIS SCHEDULE, THE CONTRACTOR SHALL BE RESPONSIBLE FOR THE COST OF SURVEYING THE TOPS OF BEAMS AND MAKING ANY NECESSARY ADJUSTMENTS TO THE GIRDER BUILDUP.
5. TREATMENT OF CREEP AND SHRINKAGE IN ACCORDANCE WITH CEB-FIP RECOMMENDATIONS, 1978 EDITION, WITH THE FOLLOWING PARAMETERS:
   AVERAGE NOTIONAL THICKNESS = 19 INCHES
   Ec (28) = 4,200,000 PSI
   ϕd = 0.4
   ϕf = 1.75
   Es = 0.00028
6. THE CONTRACTOR SHALL DESIGN THE TEMPORARY SUPPORTS AND ITS CONNECTIONS, THE DEVICE TO SECURE THE END SEGMENT BEAMS TRANSVERSELY AND THE STRONG-BACKS. THE DESIGNS SHALL BE DONE BY A PROFESSIONAL ENGINEER REGISTERED IN FLORIDA. THE CONTRACTOR SHALL SUBMIT SHOP DRAWINGS TO THE ENGINEER FOR APPROVAL SHOWING THE DETAILS (SHOWING CONNECTIONS) AND BACKUP CALCULATIONS FOR THE AFOREMENTIONED DESIGNS. AND A THOROUGH LIST OF THE ANTICIPATED CONSTRUCTION LOADS DURING EACH STEP OF THE ERECTION SEQUENCE ALL DESIGNS SHALL BE IN ACCORDANCE WITH AASHTO DESIGN REQUIREMENTS WITH THE FOLLOWING ADDITIONAL REQUIREMENTS:
   I) THE DESIGN LOADINGS FOR TEMPORARY SUPPORTS AND STRONG-BACKS SHALL FOLLOW AASHTO ARTICLE 3.22 WITH A WIND VELOCITY OF 100 MPH.
   II) FOUNDATION DESIGN SHALL COMPLY WITH ALL APPLICABLE REQUIREMENTS OF FDOT SUPPLEMENTAL SPECIFICATIONS SECTION 455.
   III) BEAM CONNECTIONS TO TEMPORARY SUPPORTS AND STRONG-BACKS SHALL BE DESIGNED AND DETAILED IN SUCH A WAY AS TO PRECLUDE ANY DAMAGE TO THE BEAMS UNDER DESIGN LOADS.
   IV) TEMPORARY SUPPORTS SHALL HAVE SUFFICIENT STIFFENESS IN BOTH THE VERTICAL AND HORIZONTAL DIRECTIONS TO PREVENT MOVEMENTS UNDER DESIGN LOADS AT THE SUPPORT FROM EXCEEDING 1/4".

Michael J Halter
5/3/96

FINLEY McNARY/JANSSEN SPAANS
a Joint Venture
Finley McNary Engineers, Inc
1391 Timberlane Road Suite 200
Tallahassee, Florida 32312-1721
Janssen & Spaans Engineers, Inc.
2825 East 56th Street
Indianapolis, Indiana 46220

REVISIONS

DATE	BY	DESCRIPTION	DATE	BY	DESCRIPTION	DATE	BY	DESCRIPTION	DATE	BY

	NAME	DATE
DR. BY	TAL	1/96
CHK. BY	MJH	1/96
SUPV.	MJH	1/96

FINLEY McNARY/JANSSEN SPAANS

BOARD OF COUNTY COMMISSIONERS
LEE, COUNTY, FLORIDA
DEPARTMENT OF TRANSPORTATION

MIDPOINT BRIDGE
MAIN SPAN UNIT
ERECTION SEQUENCE

CAMBER NOTES - APPROACH UNIT

1. IF THE BEAM DEFLECTIONS PRIOR TO THE DECK POUR ARE HIGHER THAN THOSE SHOWN ON THIS SHEET, THE CONTRACTOR MAY INSERT THE TOP OF THE BEAM INTO THE DECK BY A MAXIMUM OF 2 INCHES.

2. PRIOR TO CASTING DECK CONCRETE, DECK FORMS SHALL BE SET 8 INCHES BELOW DECK ELEVATIONS SHOWN ON THE "FINISH GRADE ELEVATIONS SHEETS" AND ADJUSTED UPWARD OR DOWNWARD BY THE AMOUNT SHOWN AS CAMBER ORDINATE E. ON THIS SHEET. SCREED RAILS SHALL ALSO BE SET UPWARD OR DOWNWARD BY THE AMOUNT SHOWN AS CAMBER ORDINATE E. UPON COMPLETION OF CONSTRUCTION THE DECK ELEVATIONS SHOULD BE ABOVE OR BELOW THE ELEVATIONS GIVEN ON THE FINISH GRADE ELEVATIONS (SHEETS NO. C-59A THRU C-63A) BY AN AMOUNT OPPOSITE TO THAT SHOWN AS ITEM C.

3. ITEMS A, B, AND C ARE INTENDED TO ASSIST THE CONTRACTOR AND ENGINEER TO TROUBLE-SHOOT ANY DEFLECTION PROBLEMS THAT MAY OCCUR DURING CONSTRUCTION. ITEM D IS USED TO CALCULATE BUILD-UP OVER BEAMS.

4. THE DEFLECTIONS SHOWN ON THIS SHEET DO NOT INCLUDE THE EFFECTS OF BEARING PAD COMPRESSIVE DEFLECTION AND COLUMN SHORTENING.

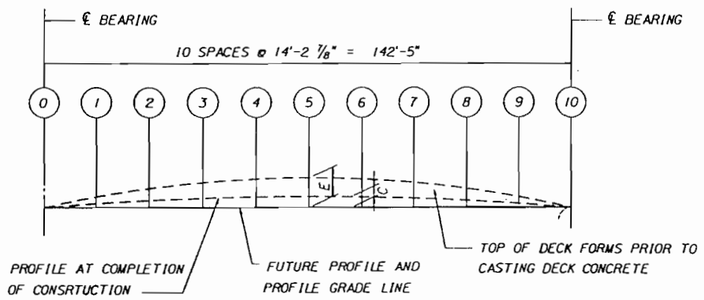

CAMBER DIAGRAM FOR MODIFIED TYPE VI GIRDER (144'-9")

BEAM DEFLECTION - 144'-9"												
ITEM	BEAM DEFLECTION DUE TO	0	1	2	3	4	5	6	7	8	9	10
A	Deflection prior to deck pours (due to beam camber)	0"	1 7/8"	3 1/4"	4 3/16"	4 3/4"	4 9/16"	4 3/4"	4 3/16"	3 1/4"	1 7/8"	0"
B	Deflection due to deck pours & barriers	0"	-15/16"	-1 3/4"	-2 3/8"	-2 3/4"	-2 7/8"	-2 3/4"	-2 3/8"	-1 3/4"	-15/16"	0"
C	Deflection due to future creep (after completion of construction)	0"	-1/16"	-1/8"	-3/16"	-3/16"	-1/4"	-3/16"	-3/16"	-1/8"	-1/16"	0"
D	Final Deflections = A+B+C	0"	7/8"	1 3/8"	1 5/8"	1 15/16"	1 15/16"	1 15/16"	1 5/8"	1 3/8"	7/8"	0"
E	Camber Ordinate = -(B+C)	0"	1"	1 7/8"	2 9/16"	2 15/16"	3 1/8"	2 15/16"	2 9/16"	1 7/8"	1"	0"

ORDINATES COMPUTED AT 10 EQUAL SPACES BETWEEN ℄ BEARINGS AT BEGIN OR END UNIT
POSITIVE ORDINATES INDICATE UPWARD DEFLECTION

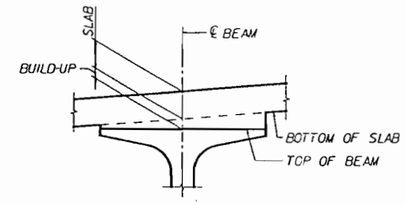

DETAIL SHOWING BUILD-UP OVER BEAM

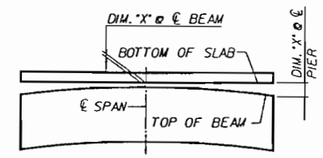

CASE T
BUILD-UP DIAGRAM FOR TANGENT SPANS

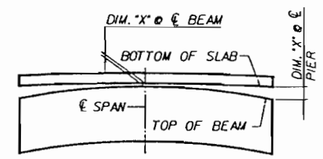

CASE C_1
BUILD-UP DIAGRAM FOR CREST VERTICAL CURVE SPANS

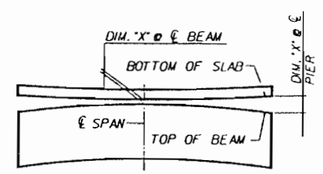

CASE C_3
BUILD-UP DIAGRAM FOR SAG VERTICAL CURVE SPANS

BUILD-UP OVER BEAMS FOR APPROACH SPANS						
UNIT NO.	SPAN NO.	VERTICAL CURVE CORRECTION	FINAL BEAM DEFLECTION (NOTE 1)	MAXIMUM BUILD-UP DIM "X" @ ℄ PIERS	MAXIMUM BUILD-UP DIM "X" @ ℄ SPANS	BUILD-UP CASE NO.
I	32	1 9/16" ⌣	1 3/16" ▭	3 15/16"	5/8"	C3
	33	1 9/16" ⌣	1 3/16" ▭	3 3/4"	5/8"	C3
	34	0" —	1 3/16" ▭	2 7/16"	5/8"	T
J	35	0" —	1 3/16" ▭	2 7/16"	5/8"	T
	36	0" —	1 3/16" ▭	2 7/16"	5/8"	T
	37	0" —	1 3/16" ▭	2 7/16"	5/8"	T
K	38	0" —	1 3/16" ▭	2 7/16"	5/8"	T
	39	0" —	1 3/16" ▭	2 7/16"	5/8"	T
	40	-5/16" ⌒	1 3/16" ▭	2 1/16"	7/8"	C_1
	41	-1 9/16" ⌒	1 3/16" ▭	7/8"	5/8"	C_1
M	45	-1 9/16" ⌒	1 3/16" ▭	7/8"	5/8"	C_1
	46	-7/16" ⌒	1 3/16" ▭	1 5/16"	5/8"	C_1
	47	0" —	1 3/16" ▭	2 7/16"	5/8"	T
	48	0" —	1 3/16" ▭	2 7/16"	5/8"	T
N	49	0" —	1 3/16" ▭	2 7/16"	5/8"	T
	50	0" —	1 3/16" ▭	2 7/16"	5/8"	T
	51	0" —	1 3/16" ▭	2 7/16"	5/8"	T
O	52	0" —	1 3/16" ▭	2 7/16"	5/8"	T
	53	1 7/16" ⌣	1 3/16" ▭	3 7/8"	5/8"	C3
	54 (GIRDERS 1-8 BELOW SEE NOTE 2)					
GIRDERS 1-4		7/8" ⌣	1 3/16" ▭	4 1/4"	5/8"	C3
GIRDER 5		2 7/16" ⌣	1 3/16" ▭	4 3/16"	9/16"	C3
GIRDER 6		3 1/8" ⌣	1 3/16" ▭	5 1/2"	9/16"	C3
GIRDER 7		3 15/16" ⌣	1 3/16" ▭	6 3/16"	9/16"	C3
GIRDER 8		4 1/2" ⌣	1 3/16" ▭	6 7/8"	9/16"	C3

BUILD-UP DETAILS-APPROACH UNITS

NOTES:
1) CAMBER OF BEAM IS BASED ON AN AGE OF BEAM CONCRETE OF 120 DAYS.
2) SEE C-53A FOR GIRDER POSITIONS.

6 MAY 96

FINLEY McNARY/JANSSEN SPAANS
a Joint Venture
Finley McNary Engineers, Inc.
1391 Timberlane Road Suite 200
Tallahassee, Florida 32312-1721
Janssen & Spaans Engineers, Inc.
2825 East 56th Street
Indianapolis, Indiana 46220

REVISIONS

DATE	BY	DESCRIPTION	DATE	BY	DESCRIPTION	DATE	BY	DESCRIPTION	DATE	BY	

	NAME	DATE
DR. BY	J.L.S.	1/96
CHK. BY	C.W.K.	1/96
SUPV.	H.D.K.	1/96

FINLEY McNARY/JANSSEN SPAANS

BOARD OF COUNTY COMMISSIONERS
LEE, COUNTY, FLORIDA
DEPARTMENT OF TRANSPORTATION

MIDPOINT BRIDGE
HIGH LEVEL APPROACH UNITS
CAMBER DIAGRAM

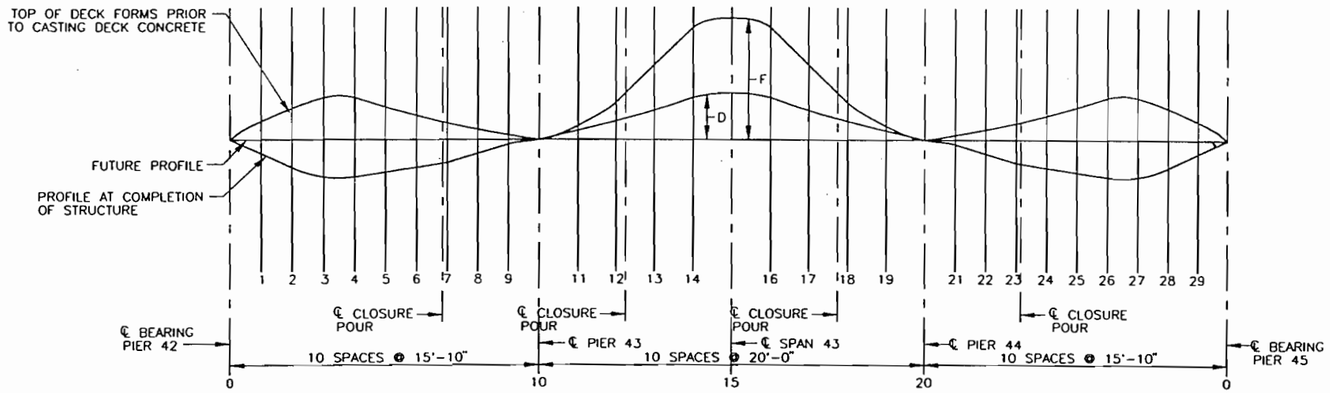

CAMBER NOTES FOR MAIN SPAN UNIT

1. IF THE BEAM DEFLECTIONS PRIOR TO THE DECK POUR ARE HIGHER THAN THOSE SHOWN ON THIS SHEET, THEN THE CONTRACTOR MAY INSET THE TOP OF THE BEAM INTO THE DECK A MAXIMUM OF 1".
2. PRIOR TO PLACEMENT OF ANY DECK CONCRETE, DECK FORMS SHALL BE SET 8" BELOW ELEVATIONS GIVEN ON THE "FINISH GRADE ELEVATION SHEETS" AND ADJUSTED UPWARD OR DOWNWARD BY THE AMOUNT GIVEN AS CAMBER ORDINATE F ON THIS SHEET. SCREED RAILS SHALL ALSO BE SET UPWARD OR DOWNWARD BY THE AMOUNT GIVEN AS CAMBER ORDINATE F. UPON COMPLETION OF CONSTRUCTION THE DECK ELEVATIONS SHOULD BE ABOVE OR BELOW THE ELEVATIONS GIVEN ON THE "FINISH GRADE ELEVATION SHEET" BY AN AMOUNT OPPOSITE TO THAT GIVEN FOR ITEM D.
3. ITEMS A, B, C AND D ARE INTENDED TO ASSIST THE CONTRACTOR AND ENGINEER TO TROUBLESHOOT ANY DEFLECTION PROBLEMS THAT MAY OCCUR DURING CONSTRUCTION . ITEM E, IS USED TO CALCULATE BUILD-UP OVER BEAMS, SEE SKETCH THIS SHEET.
4. ALL CAMBER ORDINATES ARE GIVEN IN INCHES.
5. LEGEND:
   - A DEFLECTION PRIOR TO THE DECK POUR (DUE TO BEAM CAMBER AND FIRST STAGE P.T.)
   - B DEFLECTION DUE TO DECK POUR.
   - C DEFLECTION DUE TO SECOND STAGE P.T. & BARRIERS)
   - D DEFLECTION DUE TO FUTURE CREEP AND FWS (AFTER COMPLETION OF STRUCTURE)
   - E FINAL DEFLECTIONS = A+B+C+D
   - F CAMBER ORDINATES = -[B+C+D]
6. A NEGATIVE (-) SIGN INDICATES DOWNWARD DEFLECTION.

BEAM NO.	ITEM (SEE NOTE 5)	SPAN 42											SPAN 43												SPAN 44										
		℄ BRG. PIER 42	1	2	3	4	5	6	℄ CLOSURE POUR	7	8	9	℄ BRG. PIER 43	11	12	℄ CLOSURE POUR	13	14	15	16	17	℄ CLOSURE POUR	18	19	℄ BRG. PIER 44	21	22	23	℄ CLOSURE POUR	24	25	26	27	28	29	℄ BRG. PIER 45
1 THRU 9	A	0	9/16	15/16	1 1/16	1 1/16	15/16	5/8	3/16	1/16	-5/8	-1	-1	-5/8	3/8	5/8	1 3/8	1 15/16	2 1/8	1 15/16	1 3/8	5/8	3/8	-5/8	-1	-1	-5/8	1/16	3/16	5/8	15/16	1 1/16	1 1/16	15/16	9/16	0
	B	0	-5/8	-1 1/8	-1 7/16	-1 9/16	-1 7/16	-1 3/16	-7/8	-13/16	-7/16	-3/16	0	0	-3/16	-1/4	-1/2	-13/16	-7/8	-13/16	-1/2	-1/4	-3/16	0	0	-3/16	-7/16	-13/16	-7/8	-1 3/16	-1 7/16	-1 9/16	-1 7/16	-1 1/8	-5/8	0
	C	0	3/16	3/8	1/2	9/16	9/16	1/2	3/8	3/8	3/16	1/16	0	-1/16	-1/16	-1/16	-1/8	-1/8	-1/8	-1/8	-1/8	-1/16	-1/16	-1/16	0	1/16	3/16	3/8	3/8	1/2	9/16	9/16	1/2	3/8	3/16	0
	D	0	3/16	3/8	3/8	7/16	7/16	3/8	5/16	5/16	3/16	1/16	0	-1/8	-1/4	-5/16	-3/8	-9/16	-5/8	-9/16	-3/8	-5/16	-1/4	-1/8	0	1/16	3/16	5/16	5/16	3/8	7/16	7/16	3/8	3/8	3/16	0
	E	0	5/16	9/16	1/2	1/2	1/2	5/16	0	-1/16	-11/16	-1 1/16	-1	-13/16	-1/8	0	3/8	7/16	3/8	7/16	3/8	0	-1/8	-13/16	-1	-1 1/16	-11/16	-1/16	0	5/16	1/2	1/2	1/2	9/16	5/16	0
	F	0	1/4	3/8	9/16	9/16	7/16	5/16	3/16	1/8	1/16	1/16	0	3/16	1/2	5/8	1	1 1/2	1 5/8	1 1/2	1	5/8	1/2	3/16	0	1/16	1/16	1/8	3/16	5/16	7/16	9/16	9/16	3/8	1/4	0

CAMBER DIAGRAM FOR MAIN SPAN UNIT

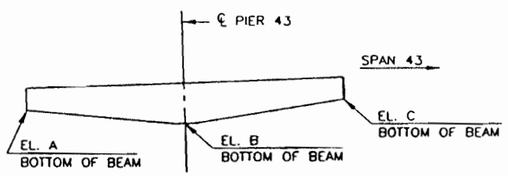

PLACEMENT OF BEAM AT PIER 43

BEAM NO.	EL. A	EL. B	EL. C	EL. D	EL. E	EL. F
1	57.585	54.429	58.454	58.483	54.482	57.664
2	57.788	54.632	58.657	58.687	54.685	57.868
3	57.992	54.836	58.861	58.890	54.889	58.071
4	58.195	55.039	59.064	59.093	55.092	58.274
5	58.195	55.039	59.064	59.093	55.092	58.274
6	57.992	54.836	58.861	58.890	54.889	58.071
7	57.788	54.632	58.657	58.687	54.685	57.868
8	57.585	54.429	58.454	58.483	54.482	57.664

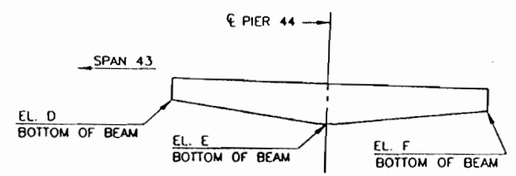

PLACEMENT OF BEAM AT PIER 44

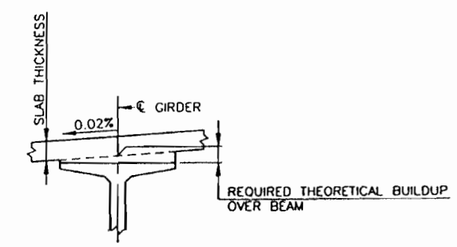

BUILD-UP OVER BEAM

NOTE: GIRDER BUILD-UP WAS COMPUTED USING THE WEIGHT OF THE BEAM, SLAB, BARRIERS, DIAPHRAGMS AND F.W.S. ALONG WITH THE PRESTRESS AND CREEP AND SHRINKAGE AT DAY 10,000.

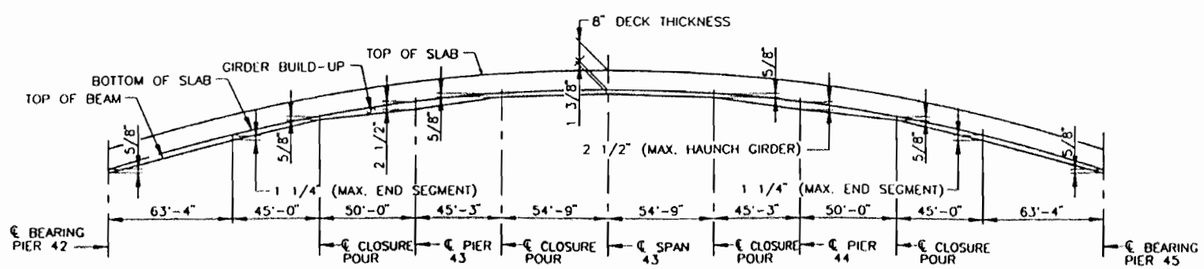

GIRDER BUILD-UP FOR MAIN SPAN UNIT

Michael J. Halter
5/8/96

FINLEY McNARY/JANSSEN SPAANS
a Joint Venture

Finley McNary Engineers, Inc
1391 Timberlane Road Suite 200
Tallahassee, Florida 32312-1721

Janssen & Spaans Engineers, Inc.
2825 East 56th Street
Indianapolis, Indiana 46220

REVISIONS											
DATE	BY	DESCRIPTION	DATE	BY	DESCRIPTION	DATE	BY	DESCRIPTION	DATE	BY	

	NAME	DATE
DR. BY	TAL	1/96
CHK. BY	MJH	1/96
SUPV.	MJH	1/96

FINLEY McNARY/JANSSEN SPAANS

BOARD OF COUNTY COMMISSIONERS
LEE, COUNTY, FLORIDA
DEPARTMENT OF TRANSPORTATION

MIDPOINT BRIDGE
MAIN SPAN UNIT
CAMBER DIAGRAM

PROJECT NO.	SHEET NO.
5896	C-101A

BX1-113

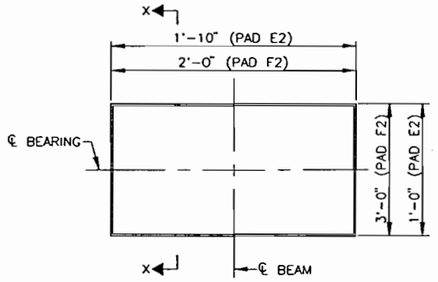

PLAN
(PADS F2 & E2)

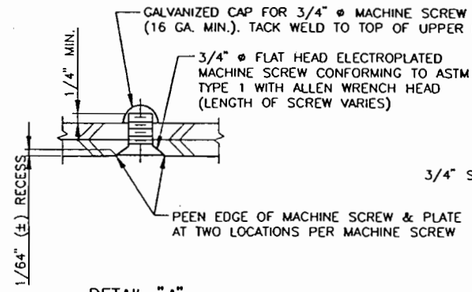

DETAIL "A"

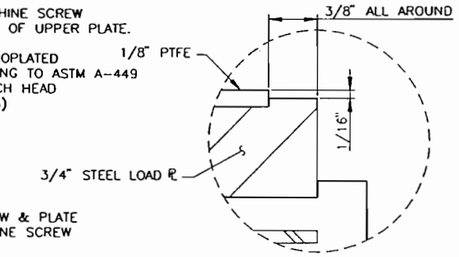

DETAIL B

BEARING PAD NOTES

1. NEOPRENE SHALL HAVE A GRADE 60 DUROMETER HARDNESS.
2. INTERNAL STEEL PLATES IN COMPOSITE PADS SHALL CONFORM TO AASHTO SPECIFICATIONS M-251, AND EXTERNAL STEEL LOAD PLATES SHALL BE ASTM A709, GRADE 36 STEEL.
3. THE STEEL LOAD PLATES SHALL BE EITHER HOT DIP GALVANIZED IN ACCORDANCE WITH STANDARD SPECIFICATION 962-7, OR SANDBLASTED AND PAINTED WITH 3 COATS OF INORGANIC ZINC PAINT IN ACCORDANCE WITH STANDARD SPECIFICATION 561 EXCEPT THAT ALL 3 COATS SHALL BE APPLIED BEFORE THE BEARING IS SHIPPED TO THE JOB SITE. THE STEEL LOAD PLATE SHALL BE VULCANIZED THE SAME TIME AS THE REMAINDER OF THE TYPE E2 PAD.
4. PAYMENT: THE COMPOSITE NEOPRENE BEARING PADS SHALL BE FURNISHED BY THE CONTRACTOR. THE COST OF TESTING, FURNISHING AND INSTALLING THE COMPOSITE NEOPRENE BEARING PADS (INCLUDING LOAD ℙ AND TFE) SHALL BE INCLUDED IN THE CONTRACT UNIT PRICE FOR COMPOSITE NEOPRENE BEARING PADS. SUCH PRICE AND PAYMENT SHALL BE FULL COMPENSATION FOR ALL WORK AND MATERIALS REQUIRED FOR A COMPLETE INSTALLATION.
5. NEOPRENE BEARING PADS FOR SPANS 1 THRU 31 AND 55 THRU 63 ARE SHOWN ON SHEET C-83.
6. FOR SPANS 32 THRU 41 AND 45 THRU 54 SEE SHEET C-102A.
7. FABRICATION OF TYPE E2 BEARING ASSEMBLIES SHALL CONFORM TO THE REQUIREMENTS OF TECHNICAL SPECIAL PROVISIONS SECTION 932A.

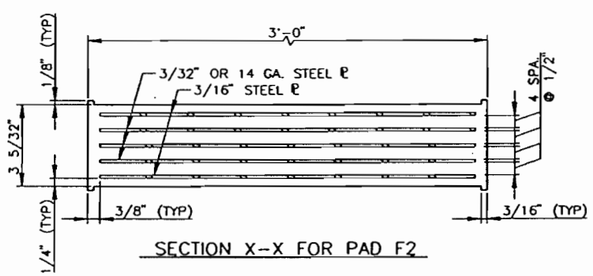

SECTION X-X FOR PAD F2

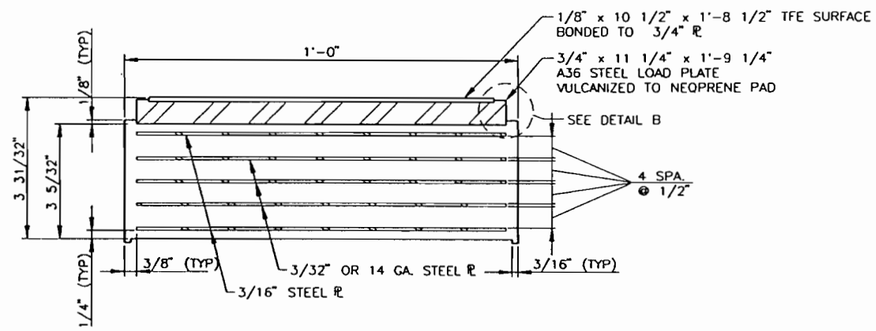

SECTION X-X FOR PAD E2

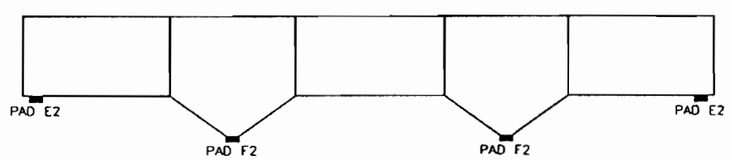

PIER 42 PIER 43 PIER 44 PIER 45

MAIN SPAN UNIT

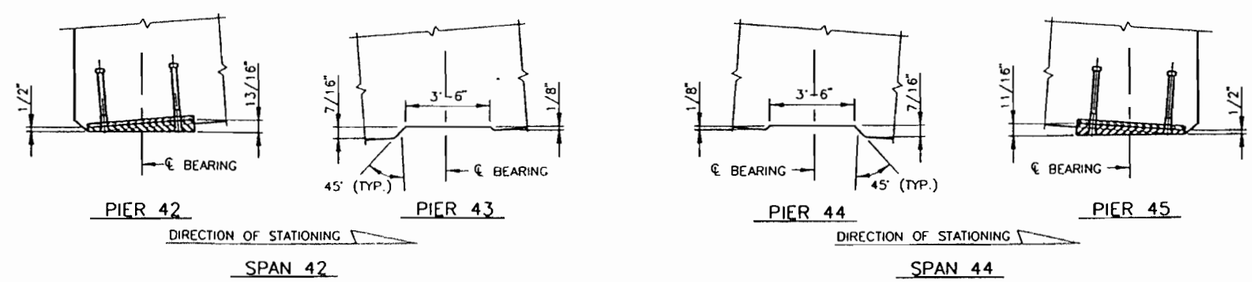

SECTION SHOWING BEARING PLATE AND RECESS SLOPES

NOTE: TOP PLATES ARE PARALLEL TO THE BOTTOM OF THE BEAMS AT ALL LOCATIONS.

Michael J. Hatter
5/3/96

WORK THIS SHEET WITH SHEETS C-102A & C-103A.

FINLEY McNARY/JANSSEN SPAANS
a Joint Venture

Finley McNary Engineers, Inc
1391 Timberlane Road Suite 200
Tallahassee, Florida 32312-1721

Janssen & Spaans Engineers, Inc.
2825 East 56th Street
Indianapolis, Indiana 46220

REVISIONS

DATE	BY	DESCRIPTION	DATE	BY	DESCRIPTION	DATE	BY	DESCRIPTION	DATE	BY

	NAME	DATE
DR. BY	TAL	1/96
CHK. BY	MJH	1/96
SUPV.	MJH	1/96

FINLEY McNARY/JANSSEN SPAANS

BOARD OF COUNTY COMMISSIONERS
LEE, COUNTY, FLORIDA
DEPARTMENT OF TRANSPORTATION

MIDPOINT BRIDGE
BEARING DETAILS (1)

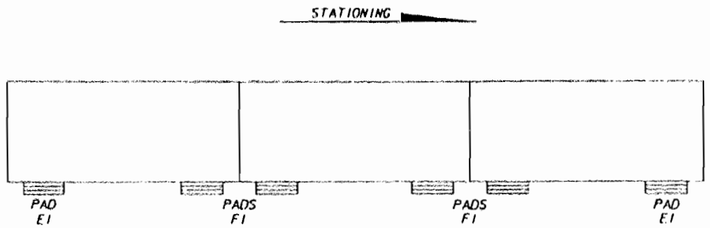

3 SPAN UNITS

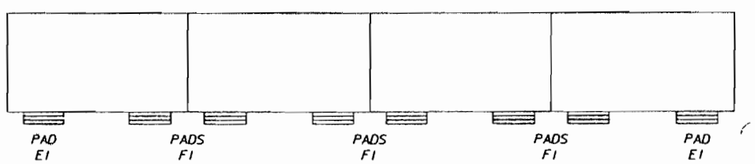

4 SPAN UNITS

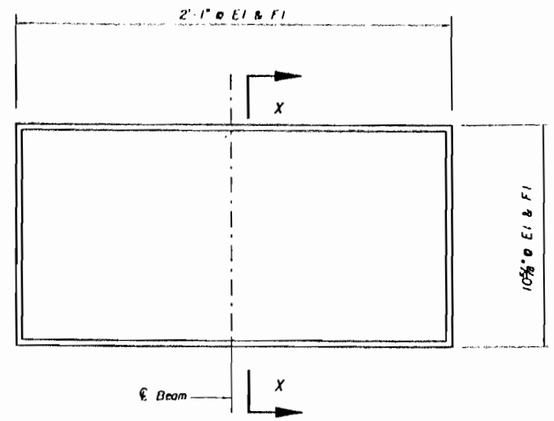

PLAN OF BEARING PADS TYPE E1 & F1

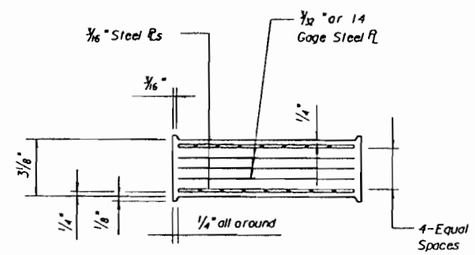

SECTION X-X

TYPES E1
(96 REQ'D)

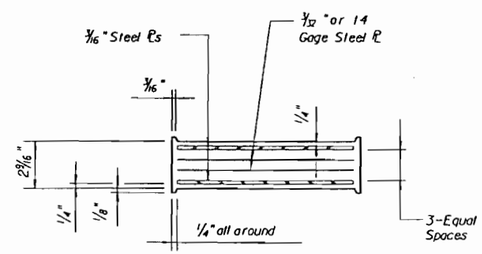

SECTION X-X

TYPES F1
(224 REQ'D)

NEOPRENE BEARING PAD NOTES

NEOPRENE: Neoprene in all pads shall have a grade 60 durometer hardness and a shear modulus of 141 psi + 5%.
STEEL PLATES: Internal steel plates shall conform to AASHTO Specifications M-251.
PAYMENT: The composite neoprene bearing pads shall be furnished by the Contractor. The cost of furnishing and installing the composite neoprene pads shall be included in the contract unit price for Composite Neoprene Pads.
TESTING: The Engineer shall test the neoprene bearing pads in accordance with ASTM D4014. See Special provisions for details.

HDR 6 MAY 96

FINLEY McNARY/JANSSEN SPAANS
a Joint Venture

Finley McNary Engineers, Inc
1391 Timberlane Road Suite 200
Tallahassee, Florida 32312-1721

Janssen & Spaans Engineers, Inc.
2825 East 56th Street
Indianapolis, Indiana 46220

REVISIONS

DATE	BY	DESCRIPTION	DATE	BY	DESCRIPTION	DATE	BY	DESCRIPTION	DATE	BY	

	NAME	DATE
DR. BY	J.L.S.	1/96
CHK. BY	C.W.N.	1/96
SUPV.	H.D.R.	1/96

FINLEY McNARY/JANSSEN SPAANS

BOARD OF COUNTY COMMISSIONERS
LEE, COUNTY, FLORIDA
DEPARTMENT OF TRANSPORTATION

MIDPOINT BRIDGE
BEARING DETAILS (2)

PROJECT NO	SHEET NO
5896	C-103A

BX1-115

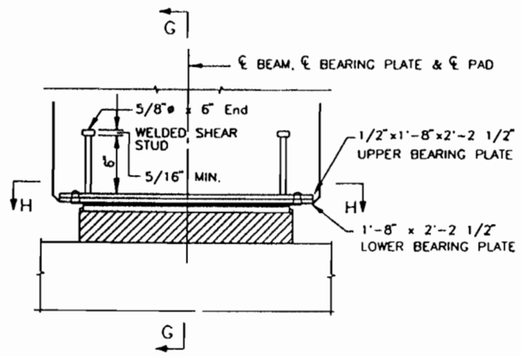

END ELEVATION – SECTION OF BEARING ASSEMBLY FOR PADS E2
(PERPENDICULAR TO ℄ BEAM)

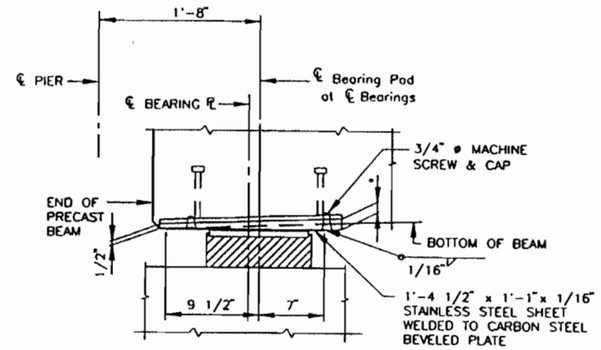

SECTION G–G
SIDE ELEVATION – SECTION OF BEARING ASSEMBLY FOR PADS E2
(PERPENDICULAR TO ℄ BEARING)
(16 TOTAL REQUIRED)

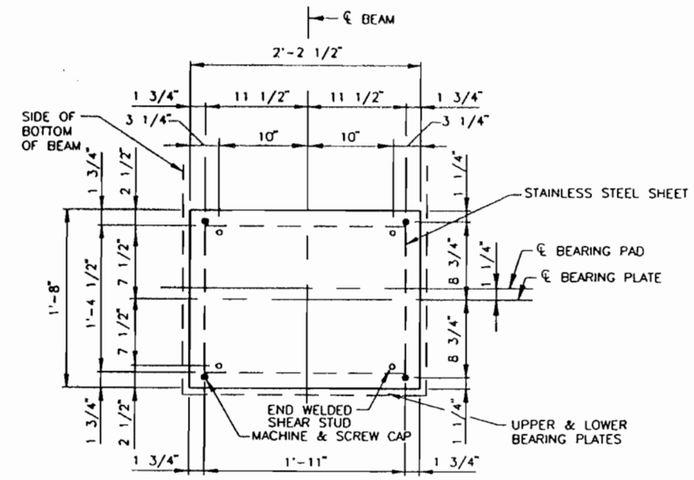

SECTION H–H
BEARING PLATE DETAIL FOR PADS E2

NOTES:

1. BEARING PLATES SHALL CONFORM TO ASTM A709 GR.36, AND SHALL BE HOT DIP GALVANIZED IN ACCORDANCE WITH STANDARD SPECIFICATION 962-7.
2. STAINLESS STEEL SHEET SHALL BE ASTM A-240 TYPE 316, AND POLISHED TO A SURFACE FINISH OF LESS THAN 10 MICRO-INCHES RMS ON THE SIDE OF THE CONTACT WITH THE TFE. MINIMUM BRINELL HARDNESS 125.
3. THE SURFACE OF THE BEARING PLATE TO WHICH THE STAINLESS STEEL SHEET IS TO BE ATTACHED SHALL BE NEAR WHITE BLAST CLEANED IN ACCORDANCE WITH SSPC-SP10. THE BACK OF THE STEEL SHEET THAT IS TO BE IN CONTACT WITH THE STEEL PLATE SHALL BE ABRADED USING EMERY CLOTH. THE STAINLESS STEEL SHEET SHALL BE POSITIONED ON THE STEEL PLATE, CLAMPED AND BONDED FIRMLY IN PLACE USING QUICK-SET EPOXY APPLIED IN THE CENTER PORTION ONLY. THE STAINLESS STEEL SHEET SHALL BE APPLIED TO THE BLAST CLEANED SURFACE OF THE STEEL PLATE AS SOON AS POSSIBLE AFTER BLASTING AND BEFORE ANY VISABLE OXIDATION OF THE BLAST CLEANED SURFACE OCCURS. THE EPOXY SHALL CONFORM TO FEDERAL SPECIFICATION MMM-A-134 TYPE 1. THE STAINLESS STEEL SHEET SHALL BE WELDED TO THE STEEL BEARING PLATE CONTINUOUSLY AROUND ITS PERIMETER USING A TUNGSTEN INSERT GAS, WIRE-FED WELDER WITH FILLER METAL MATCHING THE COMPOSITION OF AN E309L ELECTRODE. THE WELDING SHALL BE DONE IN A CONTROLLED MANNER USING MULTIPLE PASSES OR STITCH WELDING TECHNIQUES TO CONTROL HEAT BUILD-UP.

• FOR DIMENSIONS OF LOWER BEARING PLATE, SEE SECTION SHOWING BEARING PLATE SLOPES SHEET 101A.

WORK THIS SHEET WITH SHEETS C-101A & C-102A.

Michael J. Halter
5/3/96

FINLEY McNARY/JANSSEN SPAANS
a Joint Venture

Finley McNary Engineers, Inc
1391 Timberlane Road Suite 200
Tallahassee, Florida 32312-1721

Janssen & Spaans Engineers, Inc.
2825 East 56th Street
Indianapolis, Indiana 46220

REVISIONS

DATE	BY	DESCRIPTION	DATE	BY	DESCRIPTION	DATE	BY	DESCRIPTION	DATE	BY

	NAME	DATE
DR. BY	TAL	1/96
CHK. BY	MJH	1/96
SUPV.	MJH	1/96

FINLEY McNARY/JANSSEN SPAANS

BOARD OF COUNTY COMMISSIONERS
LEE, COUNTY, FLORIDA
DEPARTMENT OF TRANSPORTATION

MIDPOINT BRIDGE
BEARING DETAILS (3)

PROJECT NO	SHEET NO.
5896	C-104A

BX1-116

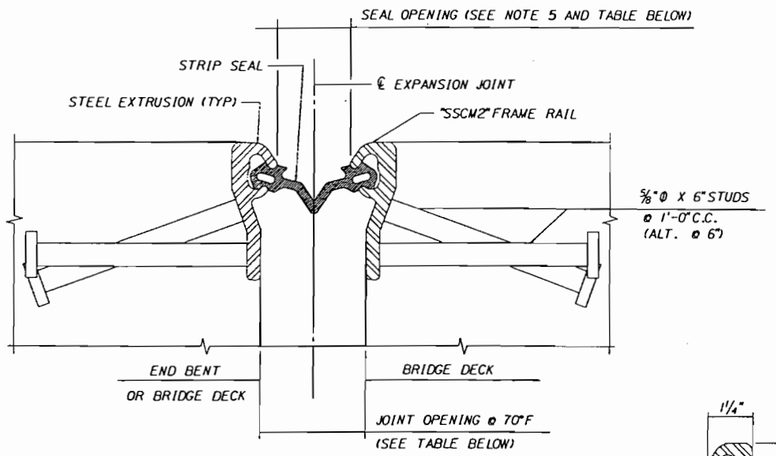

TYPICAL SECTION THRU EXPANSION JOINT

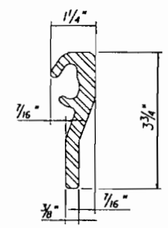

"SSCM2" FRAME RAIL

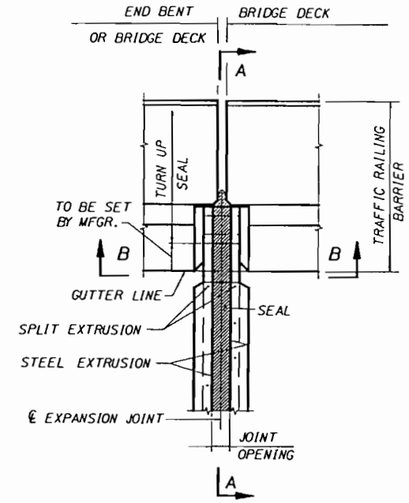

PART PLAN AT GUTTER LINE

NOTES FOR EXPANSION JOINTS

1. THE COST OF ALL LABOR AND MATERIALS REQUIRED FOR CONSTRUCTION OF EXPANSION JOINTS IN BRIDGE DECKS SHALL BE INCLUDED IN THE CONTRACT UNIT PRICE FOR EXPANSION JOINT SEAL (STRIP ELASTOMERIC). ITEM NO. 460-7-4.
2. ALL STRUCTURAL STEEL FOR THE EXPANSION ASSEMBLY SHALL BE ASTM A36 OR A588.
3. AFTER ALL WELDING OPERATIONS HAVE BEEN COMPLETED, THE ASSEMBLY SHALL BE HOT DIP GALVANIZED IN ACCORDANCE WITH ASTM A-123. THE GALVANIZED ASSEMBLY SHALL BE PROTECTED DURING DECK SCREEDING OPERATIONS.
4. THE CONTRACTOR SHALL SUBMIT SHOP DRAWINGS SHOWING ALL EXPANSION JOINT MATERIALS INCLUDING SEAL MANUFACTURER, SEAL DESIGNATION AND PROPOSED METHOD OF INSTALLATION. THE SEAL SELECTED SHALL BE A HEAVY DUTY BRIDGE SEAL AND ACCOMMODATE THE JOINT SIZE SHOWN IN ACCORDANCE WITH THE MANUFACTURER'S RECOMMENDATIONS.
5. FOR TEMPERATURES OTHER THAN 70°F, ADJUST "JOINT OPENING" ACCORDING TO THE TEMPERATURE ADJUSTMENTS SHOWN IN THE EXPANSION JOINT DATA TABLE. FOR TEMPERATURES ABOVE 70°F DECREASE OPENING. FOR TEMPERATURES BELOW 70° INCREASE OPENING.

EXPANSION JOINT DATA (SEE NOTE 6)						
LOCATION	SEAL OPENING @ 70°F	MAX. OPG.	MIN. OPG.	TEMP. ADJUST (IN/10°F)	MIN. REQ'D. SEAL MOVEMENT	JOINT OPENING
PIER 32	1 1/4"	2 7/8"	5/8"	1/4"	2 1/4"	2 1/8"
PIERS 35 & 52	1 1/4"	3"	5/8"	1/4"	2 3/8"	2 1/8"
PIERS 38 & 49	1 1/4"	3 5/16"	1/2"	3/16"	2 11/16"	2 1/8"
PIER 55	1 1/4"	2 11/16"	11/16"	1/4"	2"	2 1/8"

NOTE: THE SEAL DATA IS BASED ON A SEAL MOVEMENT RATING OF 2 1/8".
TOTAL UNITS REQUIRED: 17

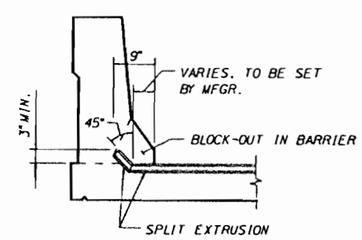

SECTION A-A

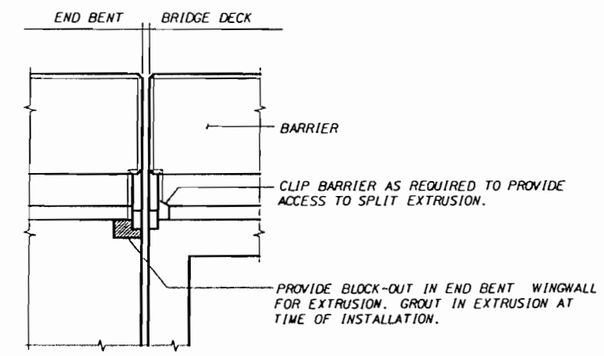

SECTION B-B

NOTE: EXTRUSIONS & SEAL NOT SHOWN FOR CLARITY.

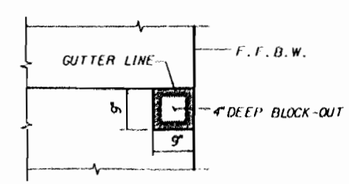

PLAN VIEW OF BLOCK-OUT AT END BENT

6 MAY 96

FINLEY McNARY/JANSSEN SPAANS
a Joint Venture

Finley McNary Engineers, Inc
1391 Timberlane Road Suite 200
Tallahassee, Florida 32312-1721

Janssen & Spaans Engineers, Inc
2825 East 56th Street
Indianapolis, Indiana 46220

REVISIONS

DATE	BY	DESCRIPTION	DATE	BY	DESCRIPTION	DATE	BY	DESCRIPTION	DATE	BY

	NAME	DATE
DR. BY	J.L.S.	5/96
CHK. BY	C.W.H.	5/96
SUPV.	H.D.R.	5/96

FINLEY McNARY/JANSSEN SPAANS

BOARD OF COUNTY COMMISSIONERS
LEE, COUNTY, FLORIDA
DEPARTMENT OF TRANSPORTATION

MIDPOINT BRIDGE
EXPANSION JOINT (1)

PROJECT NO	SHEET NO
5896	C-105A

BX1-117

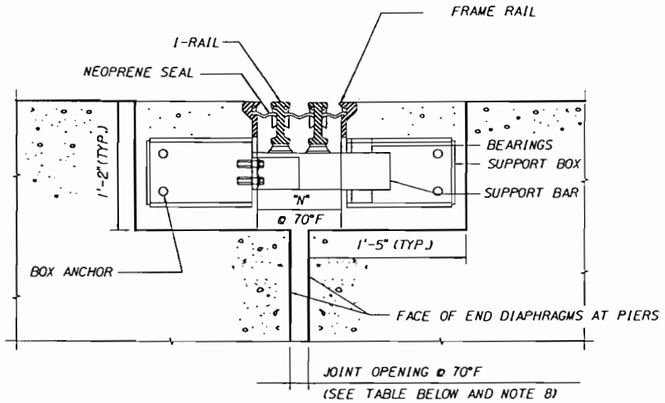

TYPICAL SECTION THRU JOINT AT SUPPORT BOX

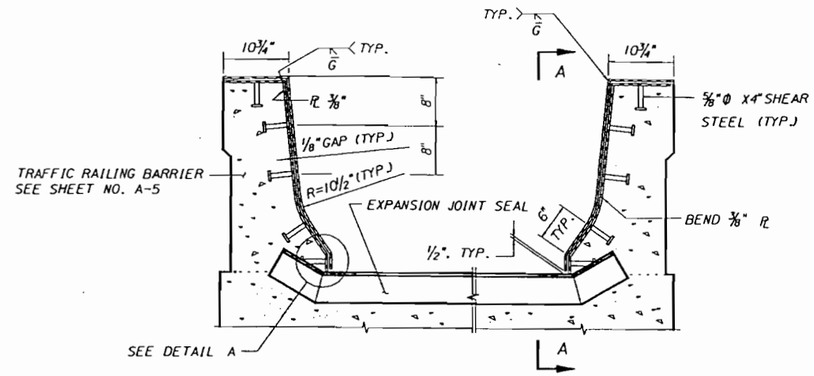

BARRIER SLIDING PLATE-ELEVATION

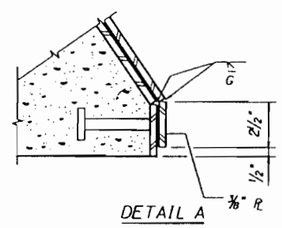

DETAIL A

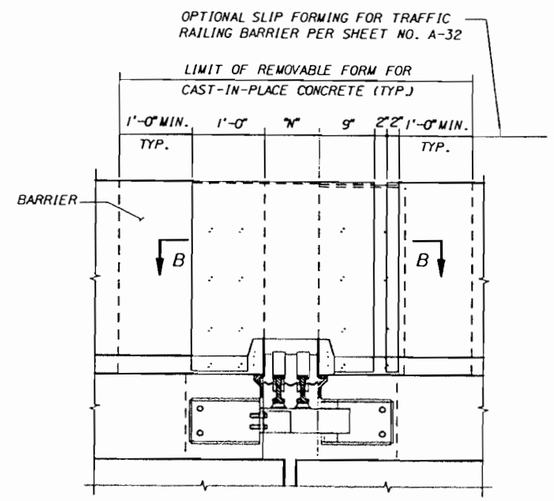

VIEW A-A

DIRECTION OF TRAFFIC

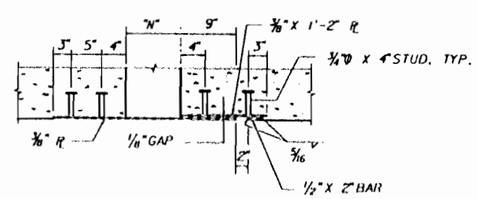

SECTION B-B

TABLE "X"	
LOCATION	TEMP. ADJUST. (IN /10°F)
PIER NOS. 42 & 45	5/16"

EXPANSION JOINT DATA				
LOCATION	SEAL OPENING "N" @ 70°F	MAX. OPENING	MIN. OPENING	JOINT OPENING
PIERS NOS. 42 & 45	11 1/16"	15⅞"	11"	5"

NOTES

1) DETAILS OF EXPANSION JOINT SHOWN ARE TYPICAL FOR MODULAR "D" SYSTEM JOINTS AS MANUFACTURED BY THE D.S. BROWN COMPANY. THE MODULAR JOINT PROVIDED SHALL BE A MODULAR "D" SYSTEM. OTHER EQUIVALENT JOINT SYSTEMS MAY BE SUBMITTED TO THE ENGINEER FOR APPROVAL.

2) ANY ADJUSTMENT TO THE DECK SLAB, THE GIRDER OR THE BARRIER SLIDING PLATE ASSEMBLY NECESSARY TO ACCOMMODATE THE EXPANSION JOINT SEAL, SHALL BE DESIGNED BY THE FABRICATOR. DESIGN CALCULATIONS AND DETAILS OF ADJUSTMENTS SHALL BE SUBMITTED TO THE ENGINEER FOR APPROVAL. THE COST OF THE ADJUSTMENTS SHALL BE CONSIDERED INCIDENTAL TO THE BID ITEM FOR EXPANSION JOINT SEAL (MODULAR), ITEM NO. 460-7-5.

3) ALL BOLTS SHALL BE A-307. STUDS, BOLTS, NUTS AND WASHERS SHALL BE HOT DIP GALVANIZED AFTER FABRICATION IN ACCORDANCE WITH THE SPECIFICATIONS.

4) ALL STEEL SURFACES EXCEPT THOSE OF STAINLESS STEEL OR IN CONTACT WITH THE NEOPRENE SEAL SHALL BE SHOP PAINTED WITH AN INORGANIC ZINC PRIMER, 3 MILS MINIMUM, ACCORDING TO SECTION 971-16 OF THE CONSTRUCTION SPECIFICATION.

5) THE NEOPRENE SEALS OF THE EXPANSION JOINT SHALL BE CONTINUOUS.

6) EXPANSION JOINT SHALL BE INSTALLED AT A SLOPE PARALLEL TO THE BRIDGE DECK.

7) CONTRACTOR SHALL PLACE CONCRETE SIMULTANEOUSLY ON BOTH SIDES OF JOINT.

8) TEMPERATURE ADJUSTMENT: FOR JOINT CONSTRUCTION AT TEMPERATURES OTHER THAN 70°F., ADJUST THE OPENING DIMENSION "N" AND JOINT OPENING ACCORDING TO THE TEMPERATURE ADJUSTMENTS SHOWN IN TABLE "X". FOR TEMPERATURES ABOVE 70°F, DECREASE OPENING, AND FOR TEMPERATURES BELOW 70°F, INCREASE OPENING. THE EXPANSION JOINTS SHALL BE EQUIPPED WITH TEMPERATURE ADJUSTMENT DEVICES TO ALLOW THESE FIELD ADJUSTMENTS.

9) IN ORDER TO MINIMIZE JOINT MOVEMENT DUE TO CREEP AND SHRINKAGE, THE CONCRETE OF THE RECESSES FOR THE EXPANSION JOINT SEALS SHALL BE THE FINAL CONSTRUCTION OPERATION.

10) ALL WELDED ASSEMBLIES SHALL BE A.S.T.M. A-709 GRADE 36 AND HOT-DIP GALVANIZED, AFTER FABRICATION, IN ACCORDANCE WITH A.S.T.M. A-123.

11) THE COST OF FURNISHING AND INSTALLING THE BARRIER AND SLIDING PLATE ASSEMBLIES SHALL BE INCLUDED IN THE CONTRACT UNIT PRICE FOR TRAFFIC RAILING BARRIER.

6 MAY 96

FINLEY McNARY/JANSSEN SPAANS
a Joint Venture

Finley McNary Engineers, Inc
1391 Timberlane Road Suite 200
Tallahassee, Florida 32312-1721

Janssen & Spaans Engineers, Inc
2825 East 56th Street
Indianapolis, Indiana 46220

REVISIONS

DATE	BY	DESCRIPTION	DATE	BY	DESCRIPTION	DATE	BY	DESCRIPTION	DATE	BY

	NAME	DATE
DR. BY	J.L.S.	5/96
CHK. BY	C.W.N.	5/96
SUPV.	H.D.M.	5/96

FINLEY McNARY/JANSSEN SPAANS

BOARD OF COUNTY COMMISSIONERS
LEE COUNTY, FLORIDA
DEPARTMENT OF TRANSPORTATION

MIDPOINT BRIDGE
EXPANSION JOINT (2)

PROJECT NO.	SHEET NO
5896	C-106

BX1-118

DISK&DRAW: C26000.CADD.FG BDECWP18.FGBJ

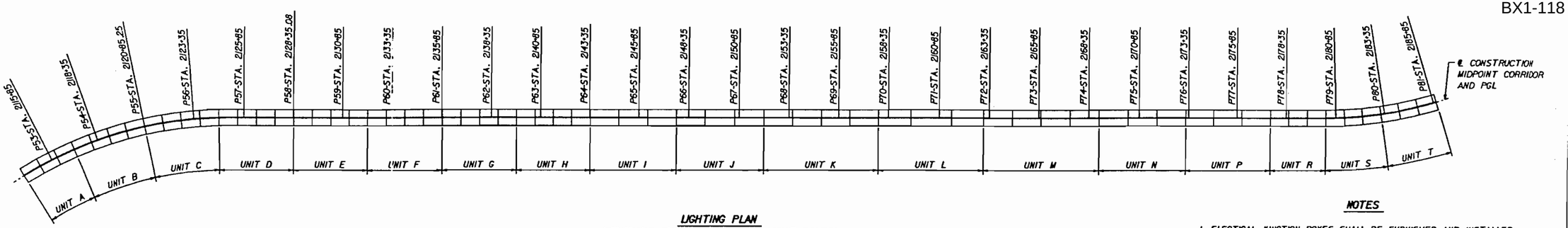

LIGHTING PLAN
(STATIONS SHOW LOCATION OF LIGHT POLES)

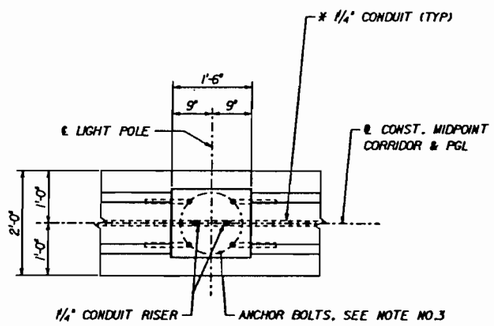

PLAN

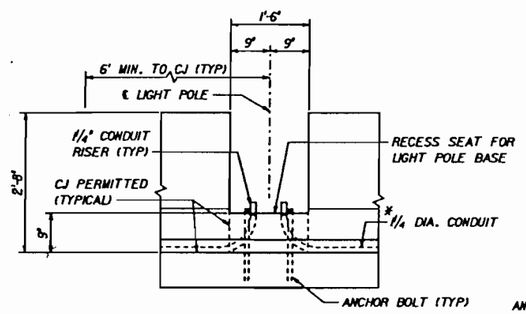

ELEVATION

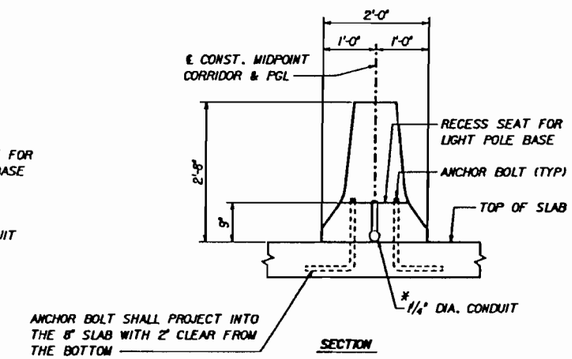

SECTION

* 1¼"ø ELECTRICAL CONDUIT FROM STA. 2115+85 TO END OF BRIDGE. PLUS A PARALLEL 1¼"ø ELECTRICAL CONDUIT FROM STA. 2130+85 TO END OF BRIDGE.

NOTES

1. ELECTICAL JUNCTION BOXES SHALL BE FURNISHED AND INSTALLED AS SHOWN.
2. ALL CONDUITS SHALL BE RIGID GALVANIZED STEEL OR SCHEDULE NO. 40 PVC AND ENDS SHALL BE SEALED IN ACCORDANCE WITH ARTICLE 630-3.4.
3. ANCHOR BOLTS SHALL RESIST THE LIGHT POLE LOADS. CALCULATIONS SHALL BE SUBMITTED WITH THE SHOP DRAWINGS AND SHALL BE SIGNED AND SEALED BY A PROFESSIONAL ENGINEER REGISTERED IN THE STATE OF FLORIDA.
4. THE COST OF ANCHOR BOLTS SHALL BE INCLUDED IN THE BID PRICE FOR LIGHT POLES.
5. PAYMENT: THE COST OF ALL LABOR AND MATERIALS REQUIRED FOR THE CONSTRUCTION OF THE LIGHT POLE BASES AND ALL CONDUITS. EXPANSION COUPLINGS. AND MISCELLANEOUS HARDWARE REQUIRED FOR COMPLETION OF THE ELECTRICAL INSTALLATION WITHIN THE LIMITS SHOWN ON THIS SHEET SHALL BE INCLUDED IN THE CONTRACTOR'S BID PRICE FOR THE MEDIAN BARRIER.

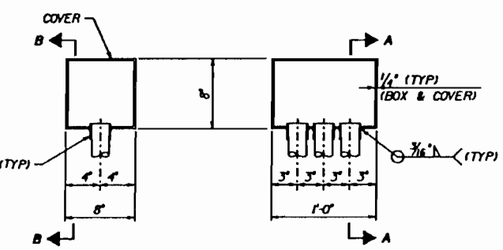

SECTION A-A

SECTION B-B

JUNCTION BOX

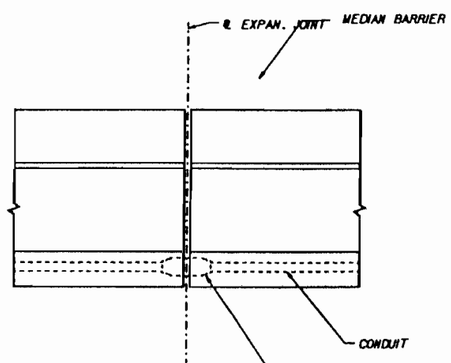

ELEVATION

PROVIDE CONDUIT EXPANSION AND DEFLECTION JOINT FITTING AT ALL EXPANSION JOINTS IN BRIDGE. THE SIZE OF THE CONDUIT EXPANSION AND DEFLECTION FITTINGS SHALL MATCH THE EXPANSION JOINT SIZE IN THE BRIDGE. AT ¾" OPEN JOINTS IN THE BARRIER PROVIDE A PROTECTIVE SLEEVE AS SHOWN IN THE CONDUIT OPEN JOINT DETAIL.

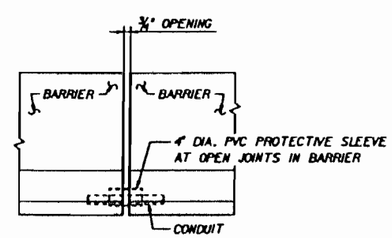

CONDUIT OPEN JOINT DETAIL

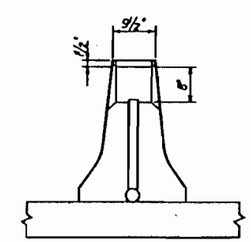

TRANSVERSE SECTION

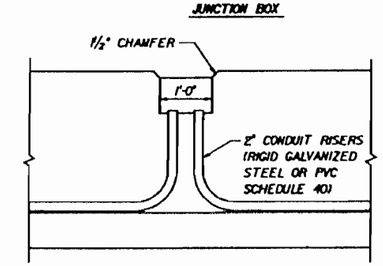

LONGITUDINAL SECTION

INSTALLATION

1. JUNCTION BOXES ARE TO BE FABRICATED FROM STEEL CONFORMING TO ASTM A-36 AND BE HOT DIPPED GALVANIZED AFTER FABRICATION. ALL SEAMS SHALL BE CONTINUOUSLY WELDED AND GROUND SMOOTH. A NEOPRENE GASKET SHALL BE ATTACHED TO THE BOX TO PROVIDE A WATERTIGHT COVER. THE COVER SCREWS SHALL BE FULLY GALVANIZED.
2. REMOVE EXCESS CONCRETE WHILE GREEN AND HAND FORM CHAMFERS.
3. JUNCTION BOX COMPLETE AND CONDUIT RISERS ARE INCIDENTAL TO THE CONSTRUCTION AND COST OF THE BARRIER WALL. THERE IS TO BE NO SEPARATE COMPENSATION FOR THE BOX, RISERS OR INSTALLATION UNLESS SPECIFICALLY CALLED FOR IN THE PLANS.

REVISIONS

DATE	BY	DESCRIPTION	DATE	BY	DESCRIPTION	DATE	BY	DESCRIPTION	DATE	BY	DESCRIPTION

	NAME	DATE
DR. BY	JBW	7/93
CHK. BY	REJ	5/94

Greiner Engineering, Inc.

Engineers, Architects and Planners

BOARD OF COUNTY COMMISSIONERS
LEE COUNTY, FLORIDA

MIDPOINT BRIDGE
LIGHT POLE MOUNTING DETAILS

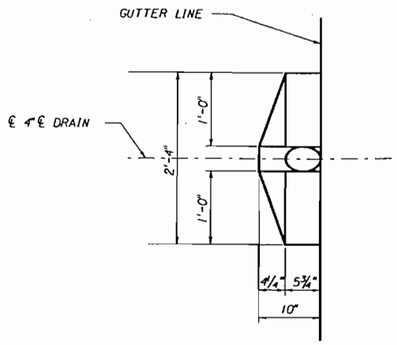

PLAN AT DRAINS

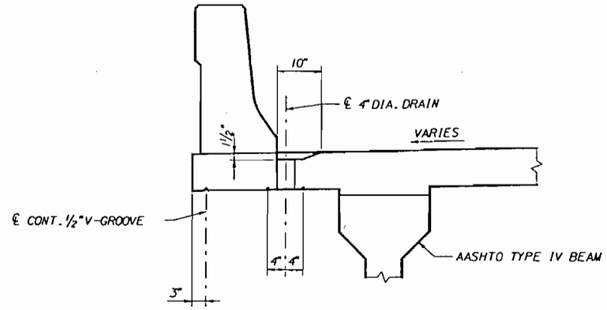

SECTION AT TRAFFIC BARRIER
(SPANS 1 THRU 31 AND 55 THRU 63)

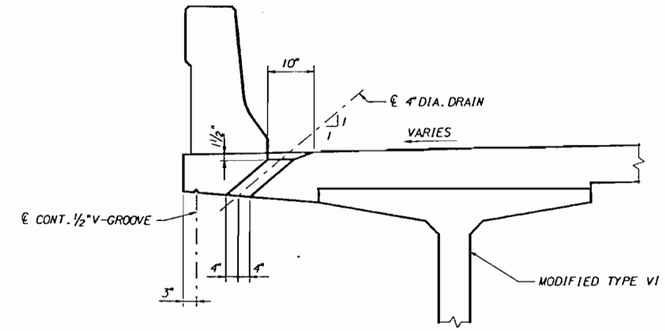

SECTION AT TRAFFIC BARRIER
(SPANS 32 THRU 54)

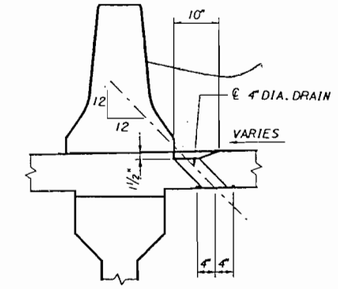

SECTION AT MEDIAN BARRIER
(SPANS 1 THRU 15 AND 55 THRU 63)

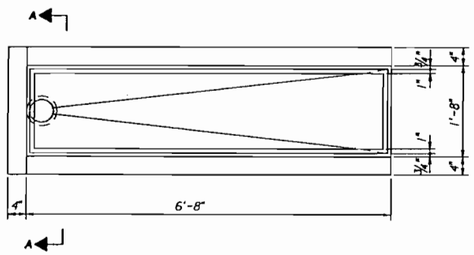

PLAN GRATING FRAME

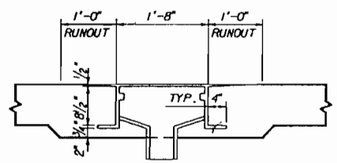

SECTION A-A

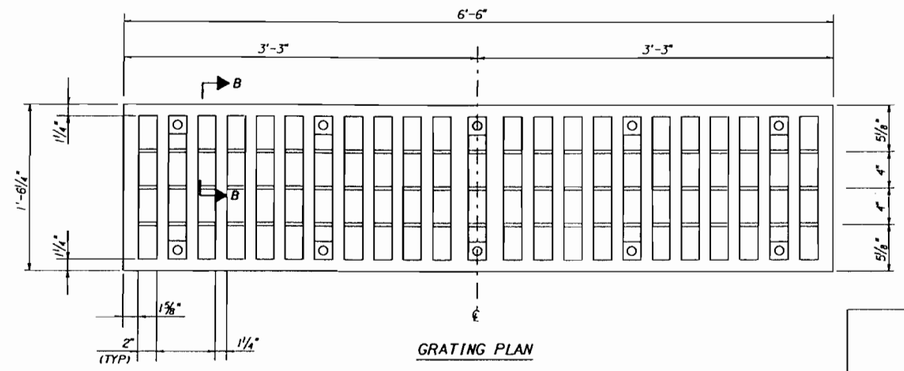

GRATING PLAN

NOTES

1. POLYVINYL-CHLORIDE PIPE SHALL CONFORM TO THE REQUIREMENTS OF ASTM D1785, TYPE II, GRADE I, SCHEDULE 40 PIPE.
2. GRATING AND GRATING FRAME SHALL BE FABRICATED FROM A.S.T.M. A-709 GRADE 50W STEEL PLATE WELDED SOLID WITH MINIMUM ¼" FILLET WELDS AND HOT DIPPED GALVANIZED IN ACCORDANCE WITH ASTM A-123 AFTER FABRICATION.
3. FOUR GRATING AND FRAME UNITS ARE REQUIRED FOR SPAN 43 (SEE SHEET C-67).
4. REINFORCING SHALL BE INCLUDED IN THE PRICE OF BRIDGE DRAINAGE SYSTEM.

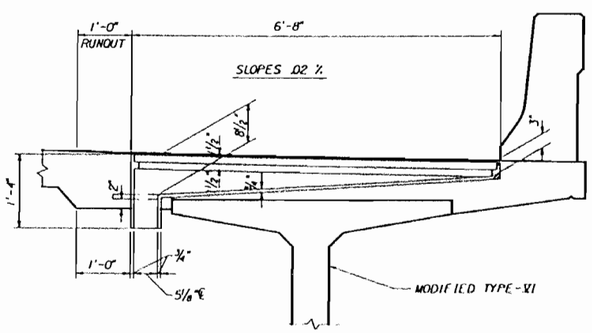

SECTION THRU GRATING FRAME

GRATING SECTION

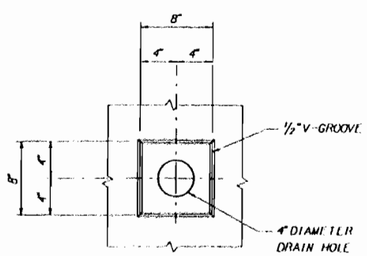

V-GROOVE DETAIL

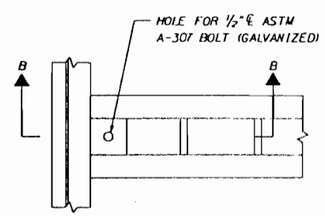

PLAN GRATING HOLD-DOWN

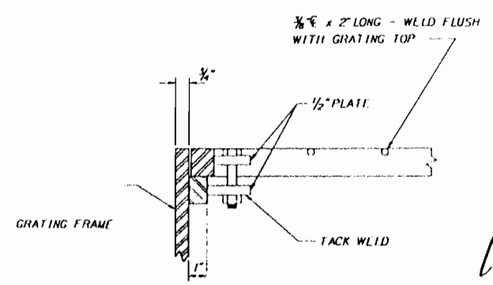

SECTION B-B
(GRATING HOLD-DOWN)

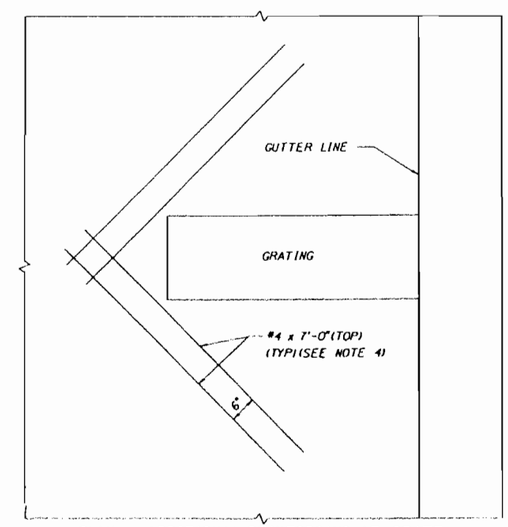

PLAN - ADDITIONAL REINFORCING AT GRATE

6 MAY 96

FINLEY McNARY/JANSSEN SPAANS
a Joint Venture

Finley McNary Engineers, Inc
1391 Timberlane Road Suite 200
Tallahassee, Florida 32312-1721

Janssen & Spaans Engineers, Inc
2825 East 56th Street
Indianapolis, Indiana 46220

REVISIONS

DATE	BY	DESCRIPTION	DATE	BY	DESCRIPTION	DATE	BY	DESCRIPTION	DATE	BY

	NAME	DATE
DR. BY	J.L.S.	5/96
CHK. BY	C.W.H.	5/96
SUPV.	H.D.R.	5/96

FINLEY McNARY/JANSSEN SPAANS

BOARD OF COUNTY COMMISSIONERS
LEE, COUNTY, FLORIDA
DEPARTMENT OF TRANSPORTATION

MIDPOINT BRIDGE
DECK DRAIN DETAILS (1)

5896	C-108A

BX1-120

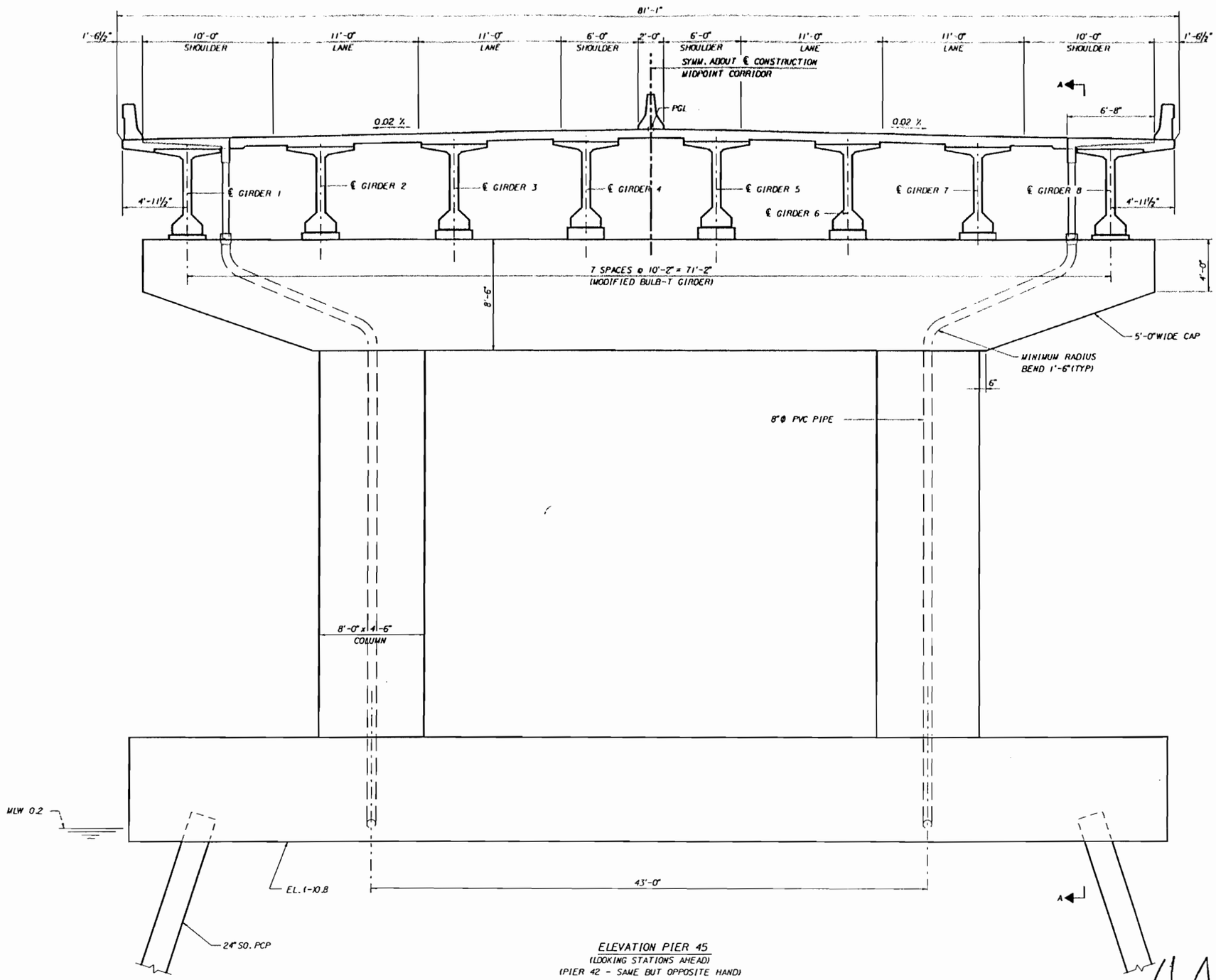

ELEVATION PIER 45
(LOOKING STATIONS AHEAD)
(PIER 42 - SAME BUT OPPOSITE HAND)

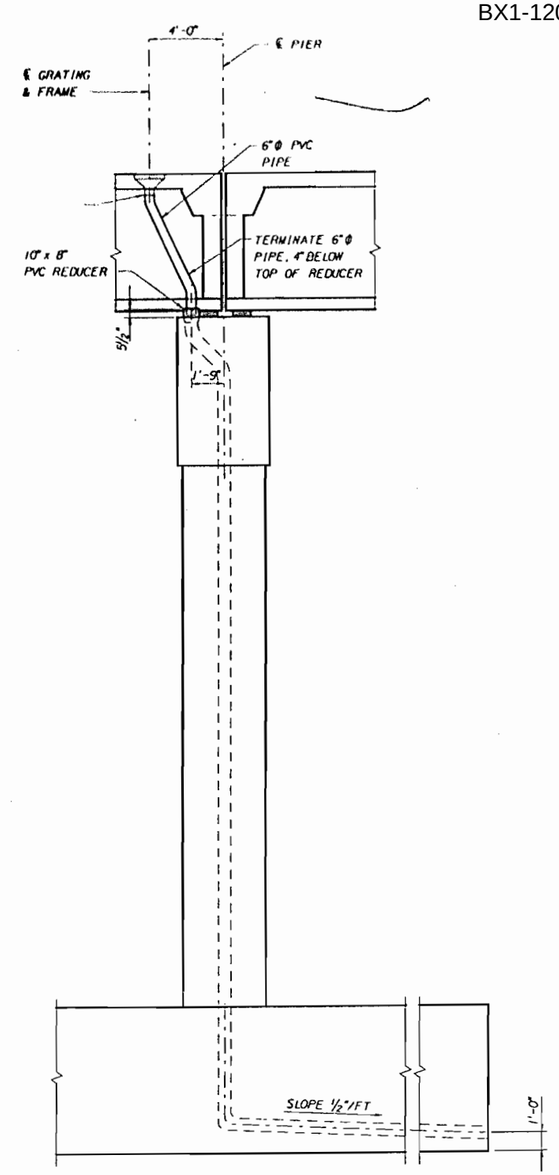

SECTION A-A

HDR 6 MAY 96

FINLEY McNARY/JANSSEN SPAANS
a Joint Venture

Finley McNary Engineers, Inc
1391 Timberlane Road Suite 200
Tallahassee, Florida 32312-1721

Janssen & Spaans Engineers, Inc.
2825 East 56th Street
Indianapolis, Indiana 46220

REVISIONS

DATE	BY	DESCRIPTION	DATE	BY	DESCRIPTION	DATE	BY	DESCRIPTION	DATE	BY	

	NAME	DATE
DR. BY	J.L.S.	1/96
CHK. BY	C.W.N.	1/96
SUPV.	H.D.R.	1/96

FINLEY McNARY/JANSSEN SPAANS

BOARD OF COUNTY COMMISSIONERS
LEE COUNTY, FLORIDA
DEPARTMENT OF TRANSPORTATION

MIDPOINT BRIDGE
DECK DRAIN DETAILS (2)

63

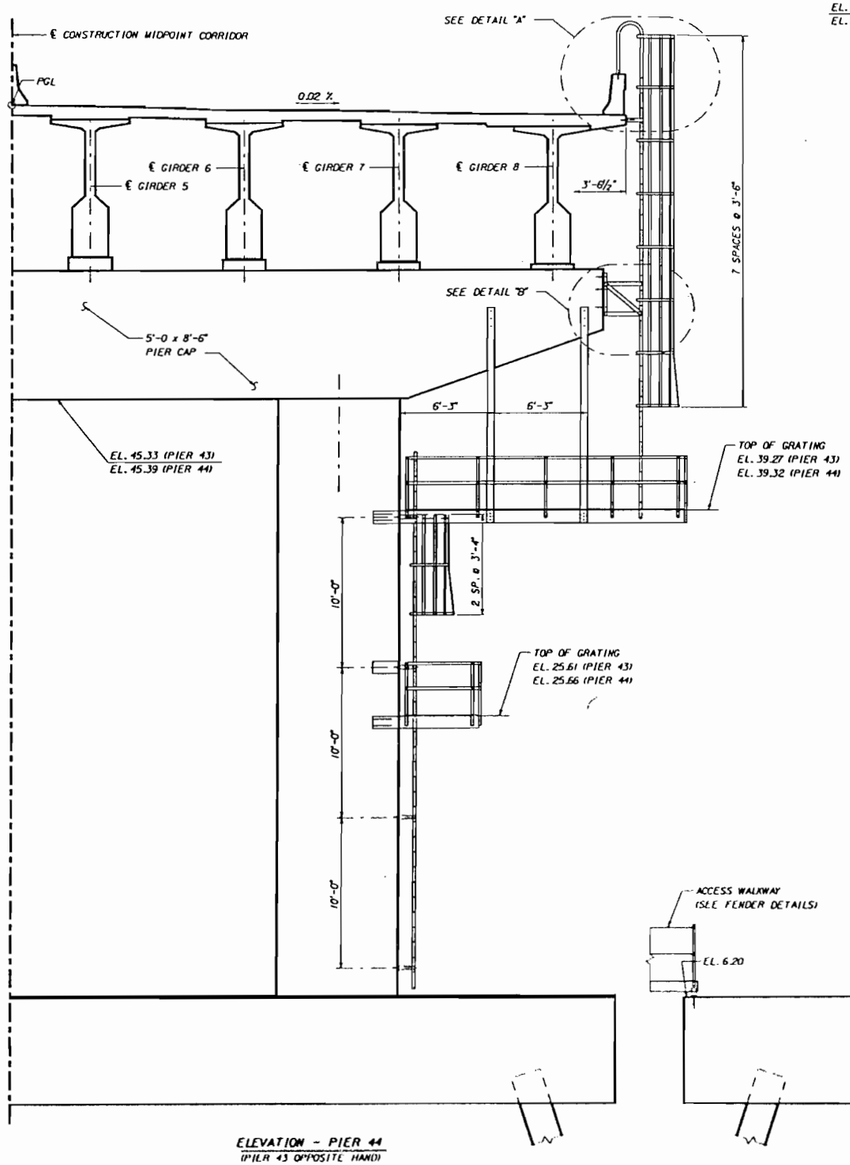

ELEVATION - PIER 44
(PIER 43 OPPOSITE HAND)

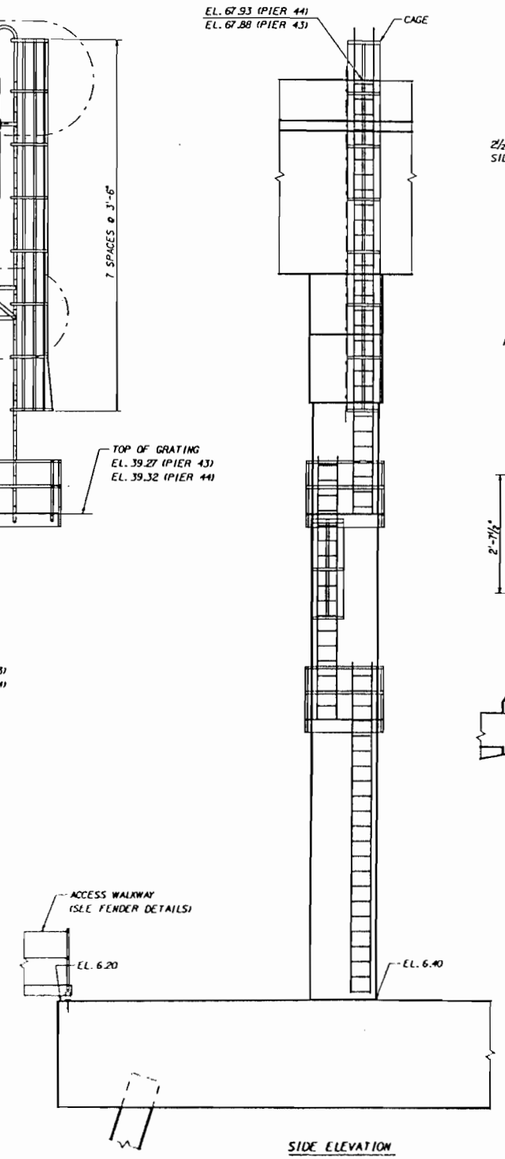

SIDE ELEVATION

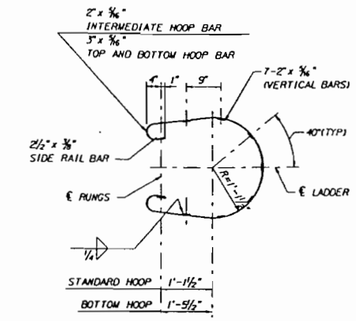

NOTE: REMOVE ALL SHARP EDGES BEFORE GALVANIZING

SECTION THRU LADDER CAGE

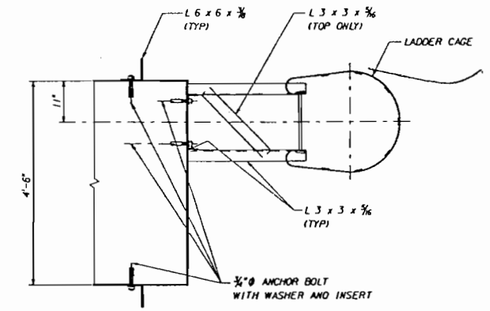

VIEW C-C

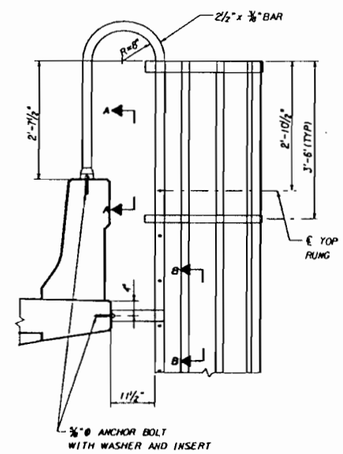

DETAIL "A"

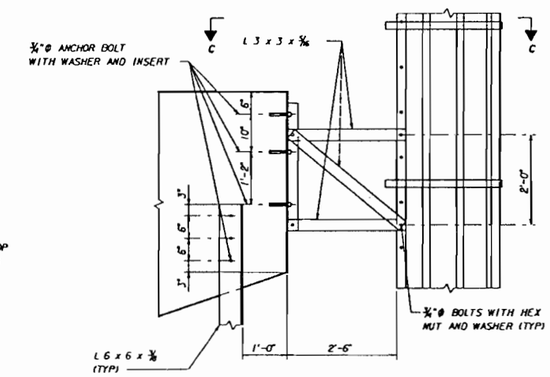

DETAIL "B"

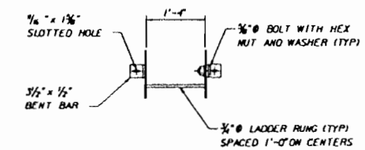

VIEW B-B

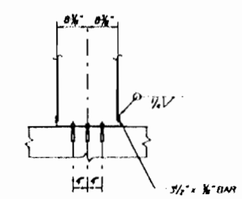

VIEW A-A

NOTES

1. ALL STRUCTURAL STEEL SHALL BE IN ACCORDANCE WITH A.S.T.M., A-36.
2. ALL STEEL FOR LADDERS INCLUDING PLATES, SHAPES, BARS, BOLTS, NUTS AND WASHERS SHALL BE HOT DIP GALVANIZED IN ACCORDANCE WITH THE SPECIFICATIONS. WELDING OF PARTS SHALL BE COMPLETED PRIOR TO GALVANIZING.
3. ALL ANCHOR BOLTS SHALL BE A.S.T.M., A-307 AND SHALL BE GALVANIZED IN ACCORDANCE WITH THE SPECIFICATIONS.
4. ALL OTHER BOLTS SHALL BE A.S.T.M., A325 AND SHALL BE ELECTROPLATED IN ACCORDANCE WITH THE SPECIFICATIONS.
5. COPE ALL ANGLES AS REQUIRED TO MATCH TOP OF CHANNELS.
6. INSERTS SHALL HAVE A MINIMUM SAFE PULLOUT LOAD AS FOLLOWS:

BOLT DIAMETER	MIN. SAFE PULLOUT LOAD
¾"	6000 LBS.
⅝"	4000 LBS.

ESTIMATED QUANTITIES

ITEM	UNIT	QUANTITY
LADDERS AND PLATFORMS	LBS.	5446

QUANTITIES ARE SHOWN FOR ONE SET OF LADDERS AND PLATFORMS. A TOTAL OF TWO ARE REQUIRED.

REVISIONS

DATE	BY	DESCRIPTION	DATE	BY	DESCRIPTION	DATE	BY	DESCRIPTION	DATE	BY	
5/96	HDR	REVISED PEDESTAL ELEVATIONS AND LOCATIONS									

	NAME	DATE
DR. BY	DDW	7/94
CHK. BY	GCG	7/94
SUPV.	REJ	7/94

Greiner
Greiner, Inc.
Tampa, Florida

Engineers, Architects and Planners

BOARD OF COUNTY COMMISSIONERS
LEE COUNTY, FLORIDA
DEPARTMENT OF TRANSPORTATION

MIDPOINT BRIDGE
ACCESS LADDER DETAILS

PROJECT NO	SHEET NO
5896	C-10

BX1-122

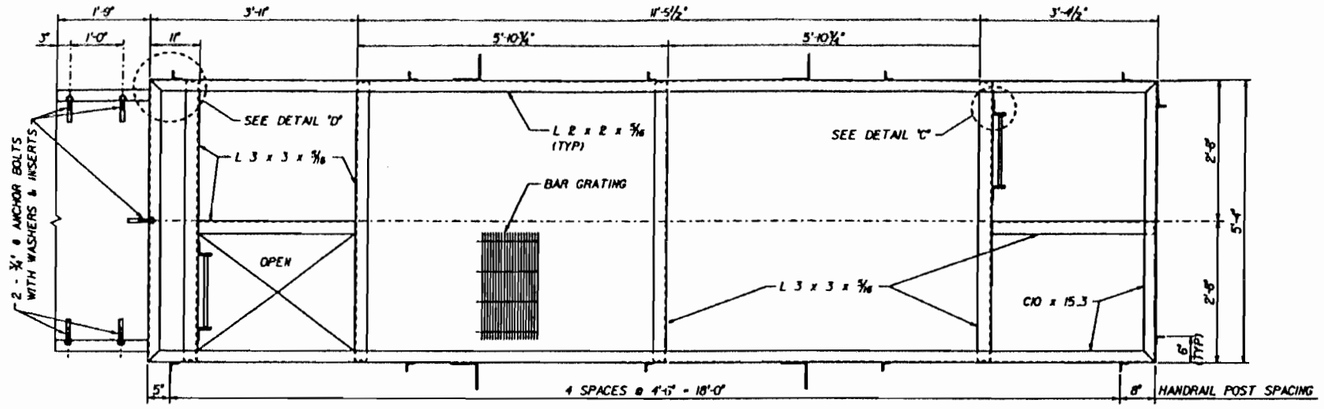

UPPER LANDING - FRAMING PLAN

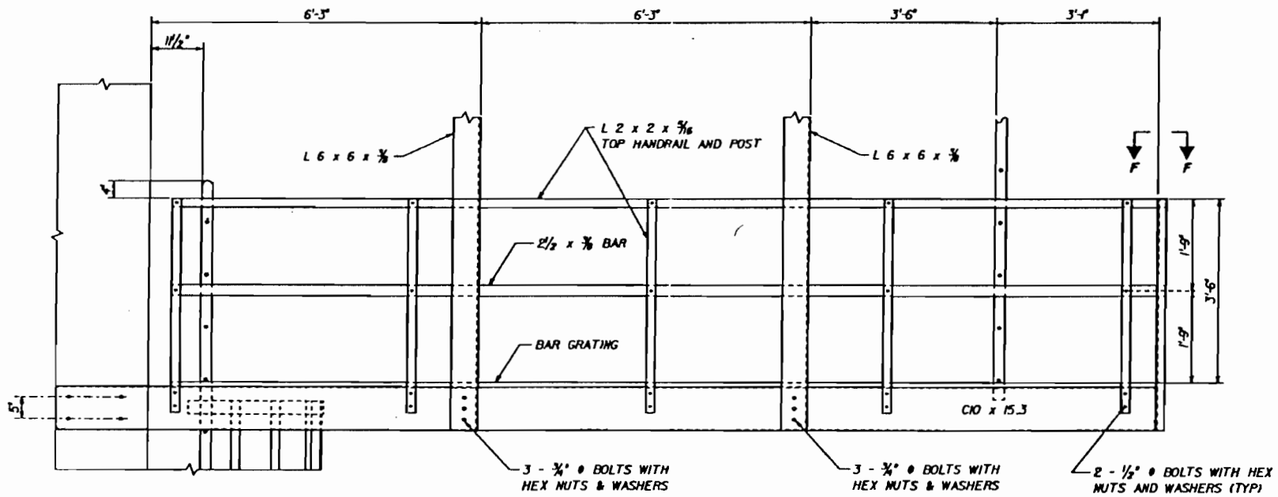

UPPER LANDING - SIDE ELEVATION

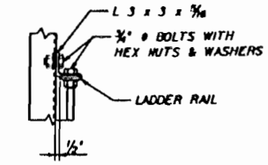

DETAIL "C"

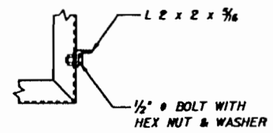

VIEW F-F

NOTE: GRATING SHALL BE WELDED STEEL, GALVANIZED, 1" x 3/16" BARS SPACED 1 3/16" ON CENTERS, WITH CROSS BARS SPACED 4" ON CENTERS. GRATING SHALL BE SECURED WITH GALVANIZED CLIPS AND BOLTS AS RECOMMENDED BY THE MANUFACTURER.

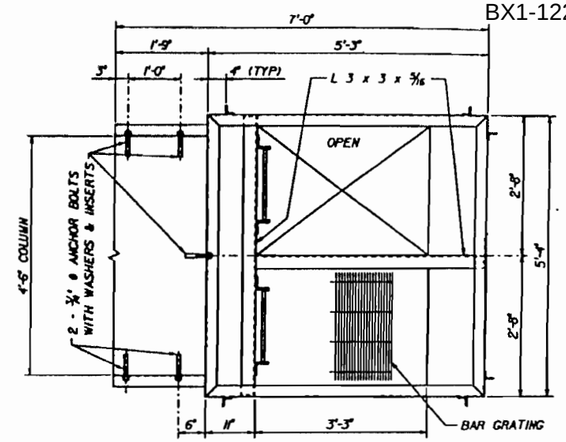

LOWER LANDING - FRAMING PLAN

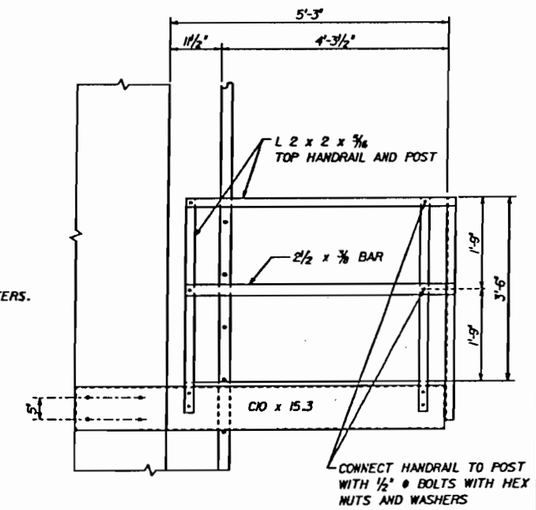

LOWER LANDING - SIDE ELEVATION

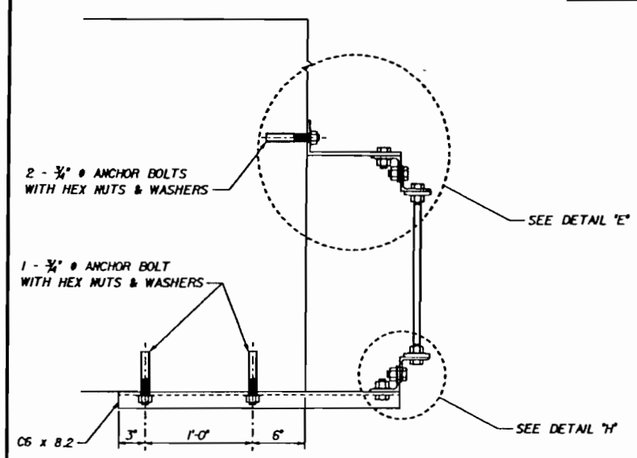

LADDER CONNECTION DETAIL

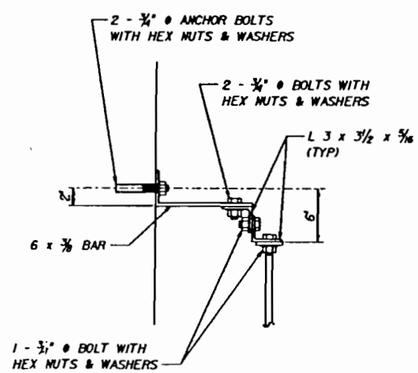

DETAIL "E"

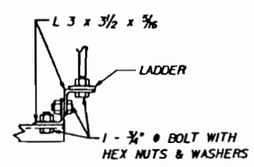

DETAIL "H"

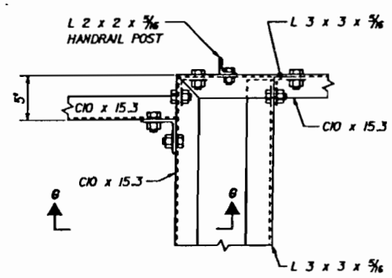

DETAIL "D"

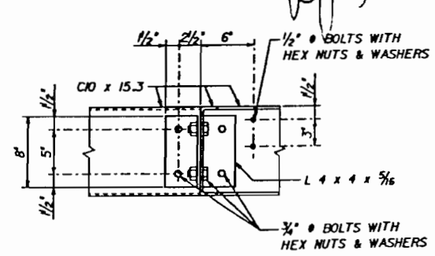

SECTION G-G

3-3-95

REVISIONS												
DATE	BY	DESCRIPTION	DATE	BY	DESCRIPTION	DATE	BY	DESCRIPTION	DATE	BY	DESCRIPTION

	NAME	DATE
DR. BY	BDW	6/94
CHK. BY	REJ	6/94
SUPV.	REJ	6/94

Greiner
Greiner, Inc.
Tampa, Florida

Engineers, Architects and Planners

BOARD OF COUNTY COMMISSIONERS
LEE COUNTY, FLORIDA
DEPARTMENT OF TRANSPORTATION

MIDPOINT BRIDGE
ACCESS LADDER PLATFORM DETAILS

FRLEECTY

C:\DATA\ 285000.CADD.FG BPRJPL3.FGBJ

PROJECT NO	SHEET NO
5896	C-111

BX1-123

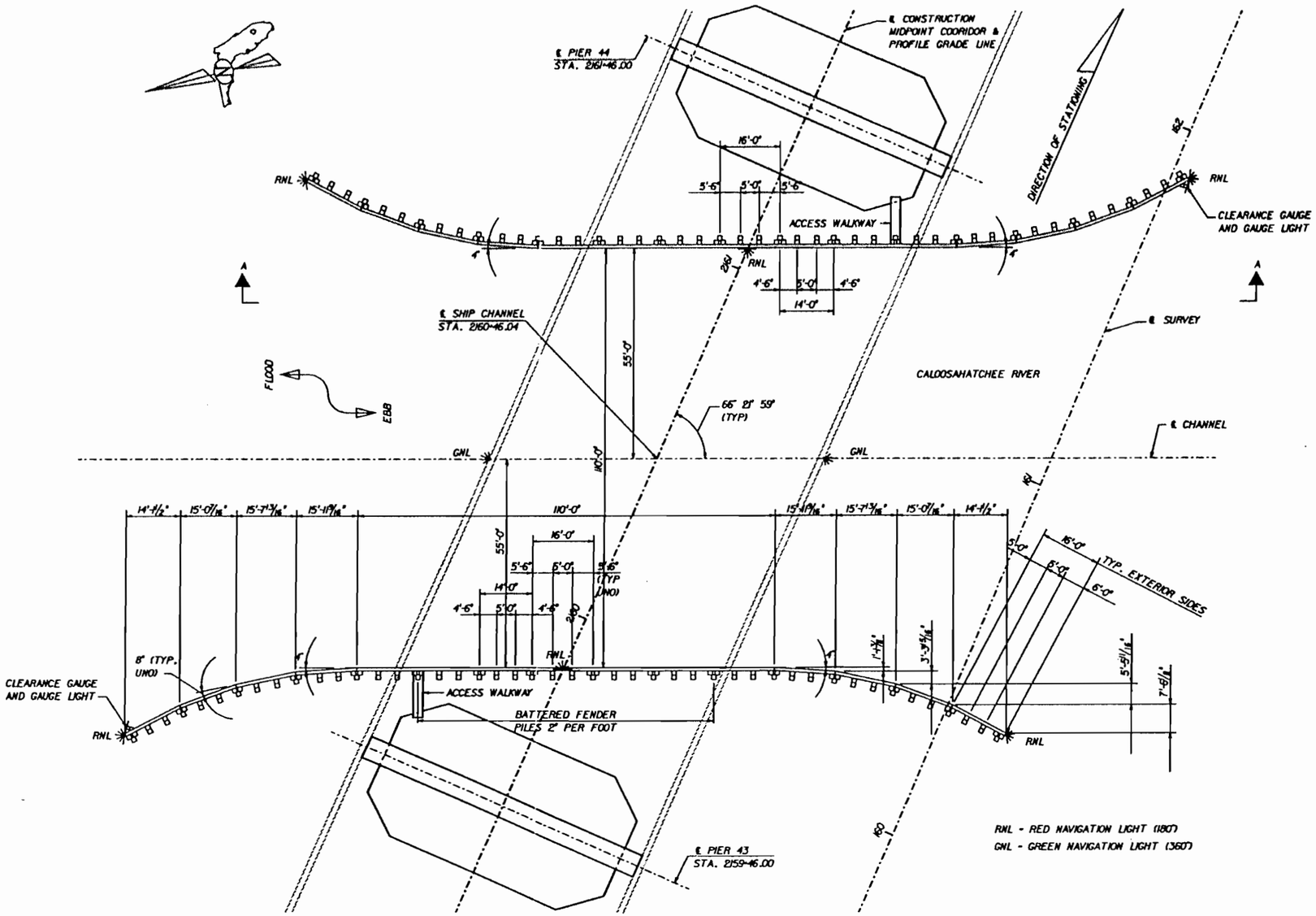

PLAN

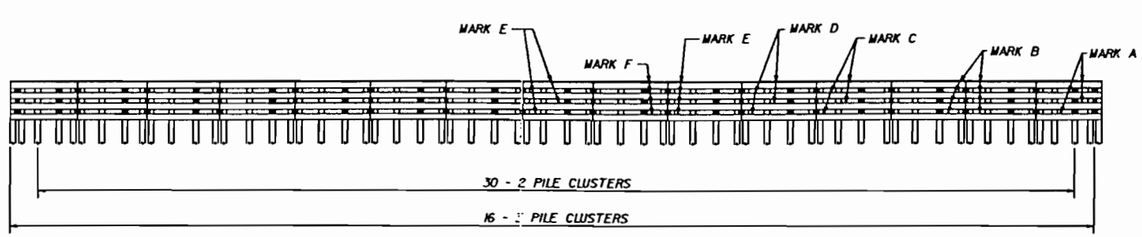

VIEW A-A (WEST SIDE)
(EAST SIDE SIMILAR BUT OPPOSITE)
(CATWALK AND HANDRAIL ARE NOT SHOWN)

BILL OF TREATED STRUCTURAL TIMBER (2 FENDERS)					
MARK	SIZE	LENGTH	NO. REQUIRED	F.B.M.	CUTTING DIAGRAM
A	10"x10"	16'-0"	16	2,133	4' 16'-0"
B	10"x10"	16'-0"	32	4,266	4' 16'-0" 4'
C	10"x10"	16'-0"	16	2,133	4' 16'-0" 2'
D	10"x10"	16'-0"	16	2,133	2' 16'-0"
E	10"x10"	16'-0"	32	4,267	16'-0"
F	10"x10"	14'-0"	8	933	14'-0"
G	8"x8"	1'-2"	244	1,518	SEE SHEET C-102
H	8"x8"	1'-10"	32	313	SEE SHEET C-102
J	2"x8"	16'-0"	28	597	16'-0"
K	2"x6"	2'-2"	820	1,777	2'-2"
L	2"x8"	14'-0"	2	37	14'-0"
M	10"x10"	16'-0"	2	267	MOUNTING TIMBER FOR GAUGE
N	10"x12"	5'-4"	2	107	BEVELED BLOCK FOR MOUNTING GAUGE

ESTIMATED QUANTITIES (2 FENDERS)		
ITEM	UNIT	TOTAL
14" SQUARE PRESTRESSED CONCRETE PILES	LIN. FT.	12,960
TREATED STRUCTURAL TIMBER	M.F.B.M.	20,481
NAVIGATIONAL LIGHTS	LUMP SUM	1

GENERAL NOTES

1. TREATMENT: ALL STRUCTURAL TIMBER SHALL BE TREATED IN ACCORDANCE WITH SECTION 955 OF FLORIDA DEPARTMENT OF TRANSPORATION SPECIFICATIONS FOR ROADWAY AND BRIDGE CONSTRUCTION, 1991 EDITION.
2. TIMBER: ALL TIMBER TO BE ROUGH CUT.
3. PAYMENT: ALL COST FOR CONNECTION HARDWARE ACCESS WALKWAYS, HANDRAILS AND OTHER MISCELLANEOUS MATERIALS, AND ALL LABOR REQUIRED TO CONSTRUCT THE FENDER SYSTEM, SHALL BE INCLUDED IN THE BID PRICE FOR TREATED STRUCTURAL TIMBER.
4. FABRICATION: ALL TIMBERS SHALL BE CUT TO DIMENSIONS SHOWN BEFORE TREATMENT.
5. PILES: LENGTH OF PILES FURNISHED SHALL BE 60'. THE STRANDS AT THE TOP OF THE PILE SHALL BE BURNED OFF AN INCH INTO THE CONCRETE AND PATCHED WITH EPOXY GROUT. ANY DAMAGE TO THE HEAD OF THE PILES AFTER DRIVING MUST BE REPAIRED WITH EPOXY GROUT.
6. HARDWARE: BOLTS AND ANCHORS SHALL BE A.S.T.M. A307. ALL BOLTS, ANCHORS, WASHERS, SPIKES, NUTS AND NAILS TO BE GALVANIZED IN ACCORDANCE WITH THE SPECIFICATION 962-7. UNLESS NOTED OTHERWISE.
7. BATTERED FENDER PILES SHALL BE BATTERED 4 INCHES PER FOOT UNLESS NOTED OTHERWISE.
8. NAVIGATION LIGHT SYSTEM INCLUDING CLEARANCE GAUGES AND ELECTRICAL SERVICE SHALL BE IN ACCORDANCE WITH FDOT AS SHOWN ON SHEETS C-114 & C-115.

3-3-93

WORK THIS SHEET WITH SHEETS C-112 THRU C-115.

DISK#DRAW: C25000.CADD.FG | BY: KOMPOY FGBI

FRLEECOTY

REVISIONS											
DATE	BY	DESCRIPTION	DATE	BY	DESCRIPTION	DATE	BY	DESCRIPTION	DATE	BY	DESCRIPTION

	NAME	DATE
DR.BY	KAC	5/93
CHK.BY	REJ	8/93
SUPV.	REJ	7/93

Greiner, Inc. Tampa, Florida — Engineers, Architects and Planners

BOARD OF COUNTY COMMISSIONERS
LEE COUNTY, FLORIDA
DEPARTMENT OF TRANSPORTATION

MIDPOINT BRIDGE
FENDER SYSTEM

PROJECT NO.	SHEET NO
5896	C-112

BX1-124

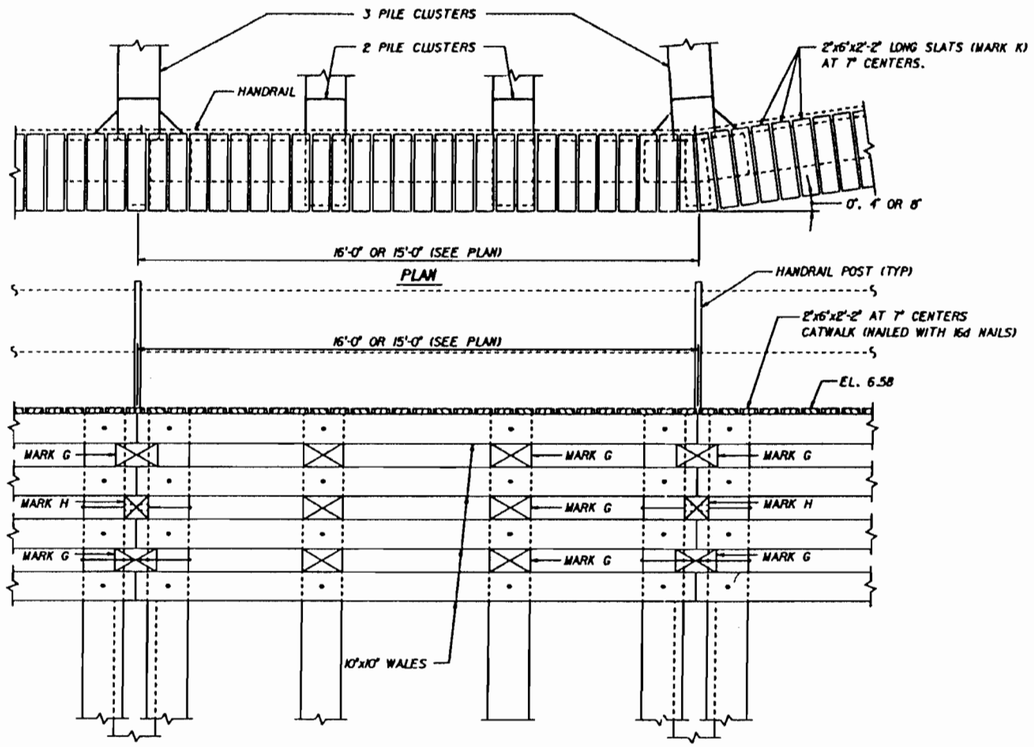

ELEVATION

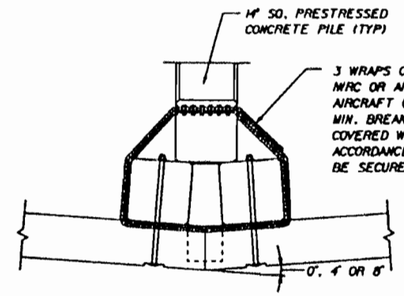

SECTION C-C

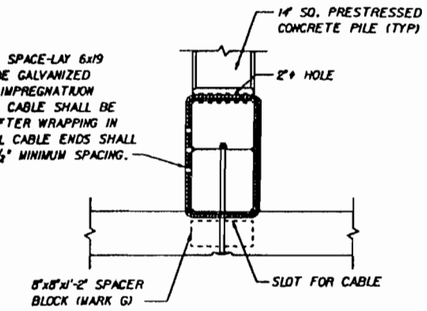

SECTION B-B

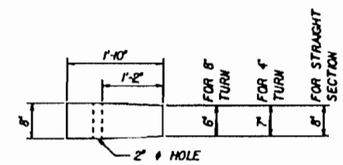

SPACER BLOCK AT 3 PILE CLUSTER
MARK H

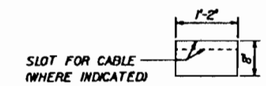

SPACER BLOCK AT 2 PILE CLUSTER
MARK G

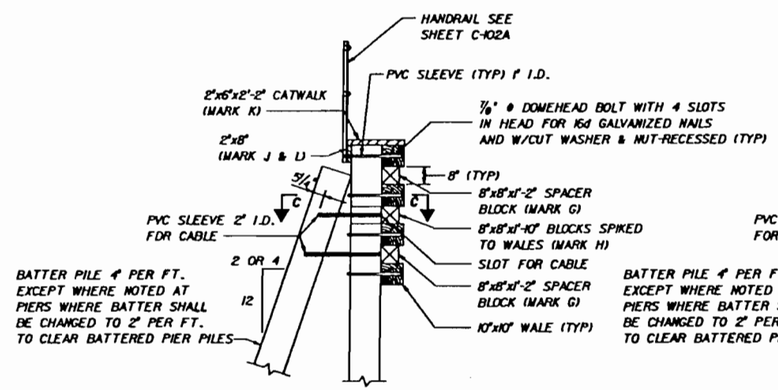

3 PILE CLUSTER

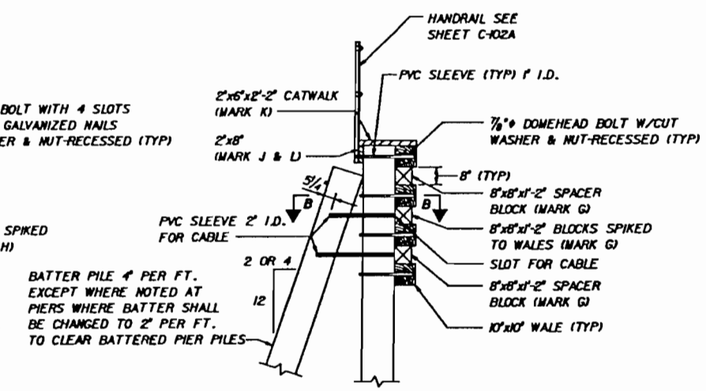

2 PILE CLUSTER

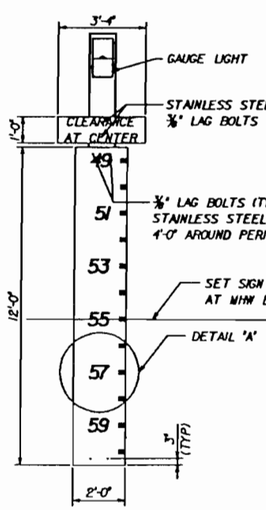

FRONT ELEVATION

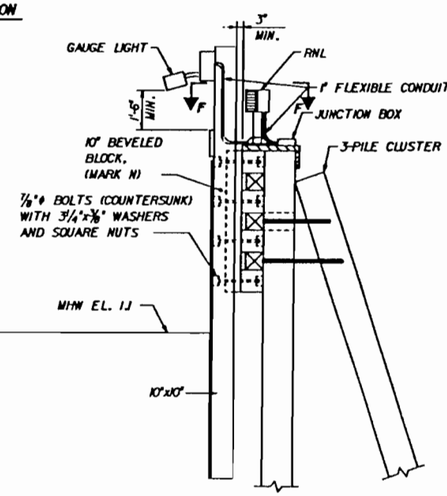

SIDE ELEVATION

CLEARANCE GAUGE

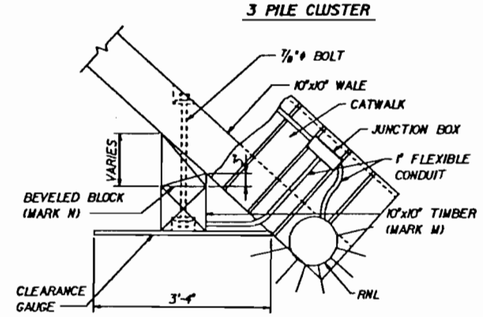

SECTION F-F

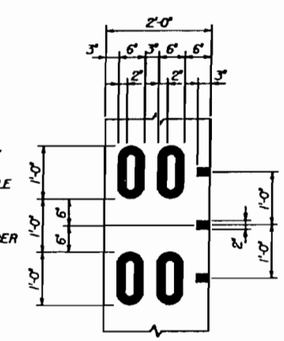

DETAIL "A"

NOTE: BLACK NUMERALS ON WHITE BACKGROUND.

FIBERGLASS REINFORCED PLASTIC (FRP) NAVIGATIONAL CLEARANCE SIGN. MANUFACTURER SHALL BE FLA. DEPT. OF TRANSPORTATION APPROVED AND SHOP DRAWINGS SHALL BE SUBMITTED. CONTRACTOR SHALL VERIFY IN FIELD. THE CLEARANCE OF THE BRIDGE AGREES WITH READING OF TARGET. IF NOT, THE TARGET WILL BE RESET.

3-3-91

WORK THIS SHEET WITH SHEETS C-111 THRU C-115.

REVISIONS

DATE	BY	DESCRIPTION	DATE	BY	DESCRIPTION	DATE	BY	DESCRIPTION	DATE	BY	DESCRIPTION

	NAME	DATE
DR. BY	HNG	1/94
CHK. BY	REJ	1/94
SUPV.	REJ	1/94

Greiner, Inc. Tampa, Florida — Engineers, Architects and Planners

BOARD OF COUNTY COMMISSIONERS
LEE COUNTY, FLORIDA
DEPARTMENT OF TRANSPORTATION

MIDPOINT BRIDGE
FENDER SYSTEM DETAILS (1)

FILECITY

PROJECT NO.	SHEET NO
5896	C-113

BX1-125

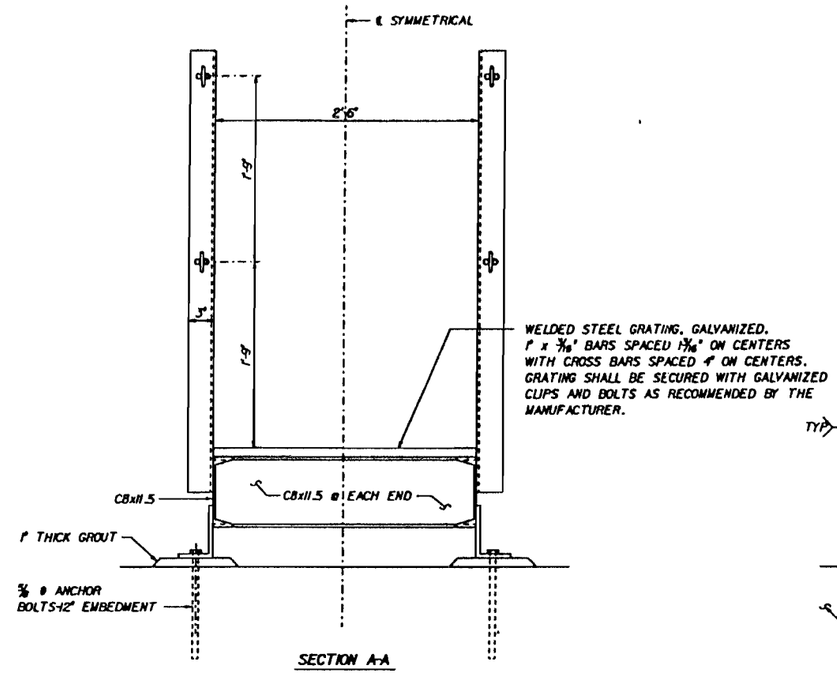

SECTION A-A

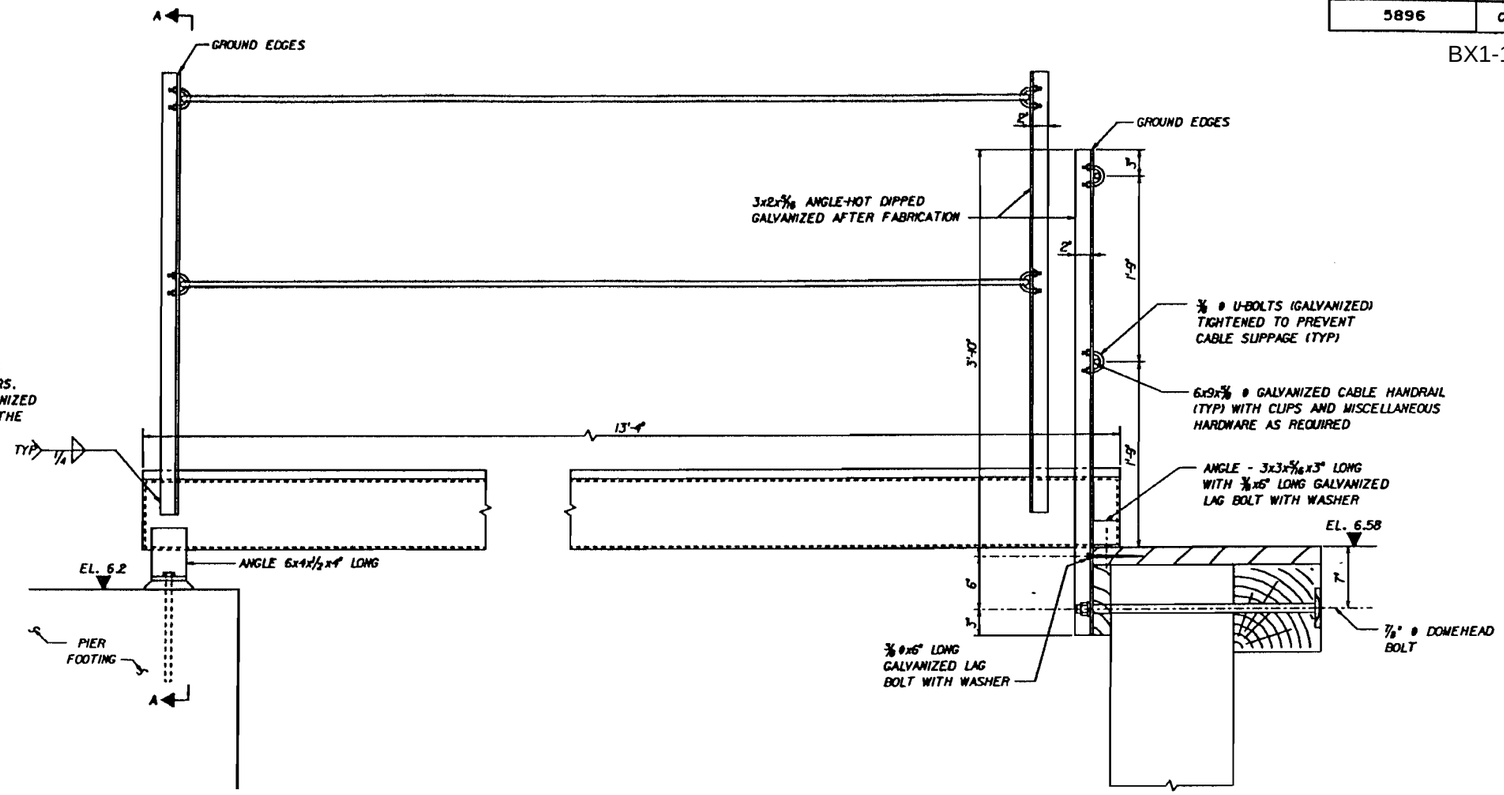

ELEVATION - ACCESS WALKWAY

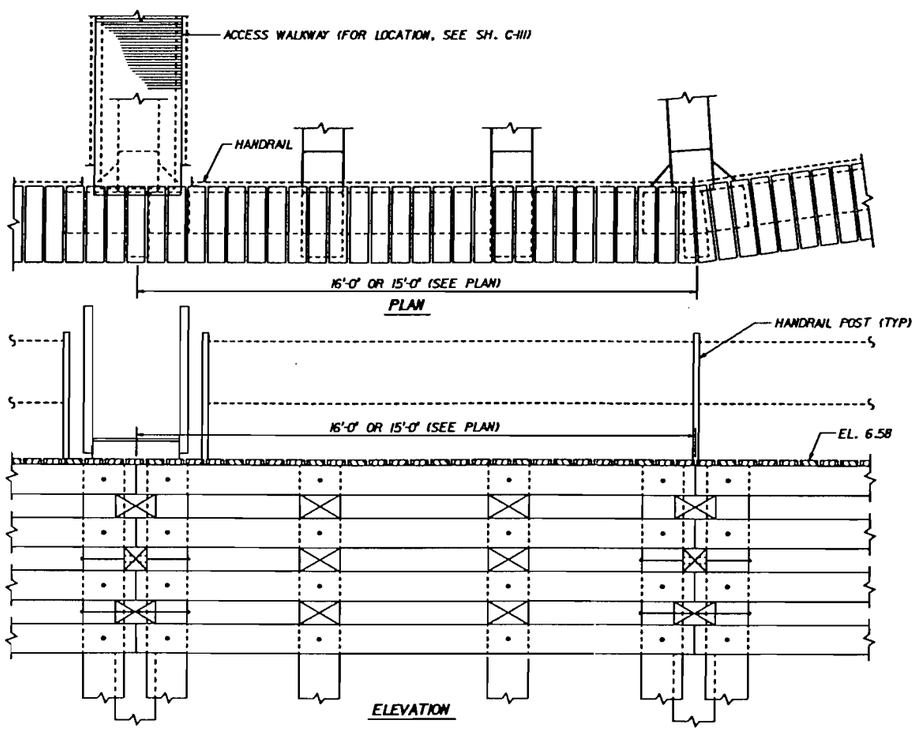

PLAN

ELEVATION

WORK THIS SHEET WITH SHEETS C-111,C-112,C-114 & C-115.

3/3/97

REVISIONS											
DATE	BY	DESCRIPTION	DATE	BY	DESCRIPTION	DATE	BY	DESCRIPTION	DATE	BY	DESCRIPTION

	NAME	DATE
DR.BY	HFV	6/94
CHK.BY	REJ	6/94
SUPV.	REJ	6/94

Greiner Greiner, Inc. Tampa, Florida

Engineers, Architects and Planners

BOARD OF COUNTY COMMISSIONERS
LEE COUNTY, FLORIDA
DEPARTMENT OF TRANSPORTATION

MIDPOINT BRIDGE
FENDER SYSTEM DETAILS (2)

FILECCTY

HHDATA: C25000 CADD FG BF HDWP12.FGBJ

FED. ROAD DIV. NO.	STATE	PROJECT NO.	FISCAL YEAR	SHEET NO.
3	FLA.			C-11.4

BX1-126

NOTE: See Fender System Drawings & Control House Drawings for their actual configuration & location.

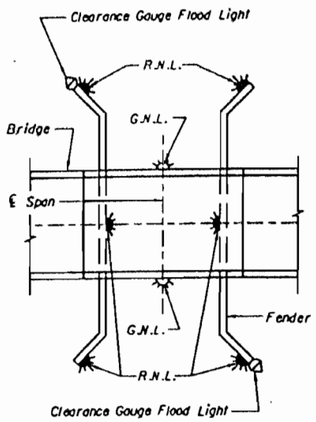

FIXED SINGLE BRIDGE NAVIGATION LIGHT SYSTEM

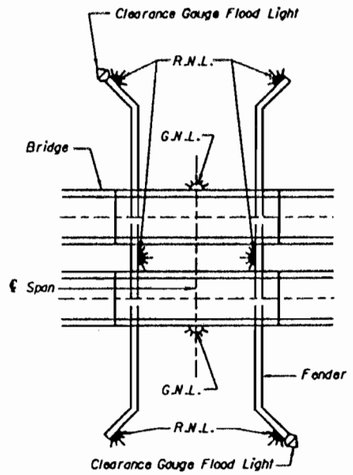

FIXED DUAL BRIDGE NAVIGATION LIGHT SYSTEM

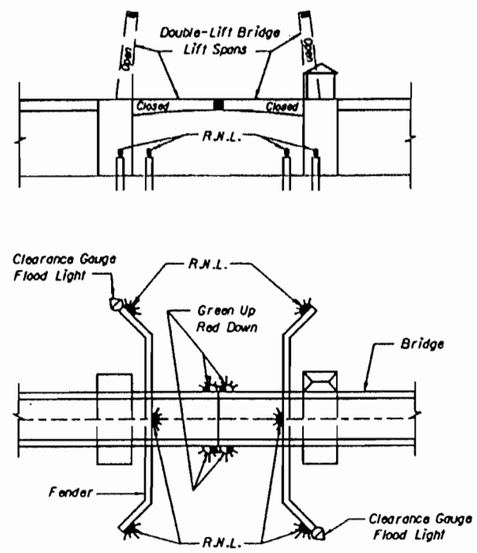

TYPICAL BASCULE BRIDGE NAVIGATION LIGHT SYSTEM DOUBLE LEAF

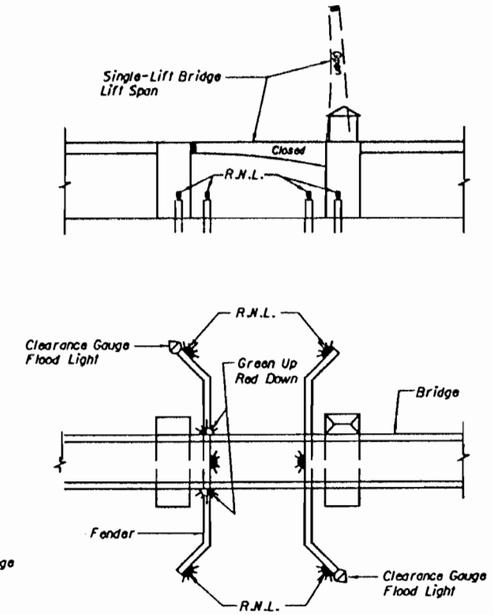

TYPICAL BASCULE BRIDGE NAVIGATION LIGHT SYSTEM SINGLE LEAF

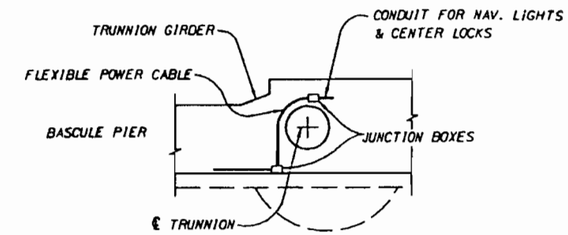

BASCULE BRIDGE FLEXIBLE CABLE ARRANGEMENT

NOTES FOR BASCULE BRIDGES

RED NAVIGATION LIGHT: 180°, 120 volt, 60 watt, minimum 155 mm fresnel lens, vandal proof. Luminous intensity for horizontal beam 30 candela (min.). Vertical divergence at 15 CD intensity, 6° maximum. Shall be equipped with a dual lamp and transfer relay option and bulbs rated minimum 32,000 hours extended life @ 110 volts. Lantern shall be mounted on a stainless steel post including fittings with a total height of 24" above fender.

RED/GREEN CHANNEL LIGHT: Red 180° lens, Green 180° lens, 120 volt, 60 watt, minimum 155 mm fresnel lens. Luminous intensity for horizontal beam 30 candela (min.). Vertical divergence at 15 CD intensity, 6° maximum. Shall be equipped with a dual lamp and transfer relay option and bulbs rated minimum 32,000 hours extended life @ 110 volts. Equip with a pivot mount and retrieval chain so that the base can be mounted outside of bridge barrier and lantern can be serviced by reaching over the barrier from inside. Hanger stem shall be long enough so that lantern does not extend below the bottom of the girder.

CLEARANCE GAUGE LIGHT: Angle of illumination 15° to 30° depending on fixture contour. Ballast with high power factor using a 35 watt high pressure sodium lamp. Enclosure to be NEMA 3R cast aluminum housing with epoxy finish enamel. Voltage shall be 110 volts, 60 Hz.

Navigation Light system shall comply with the latest edition of the Code of Federal Regulations, Navigation and Navigable Waters, CFR 33 Part 118, Bridge Lighting and Other Signals.

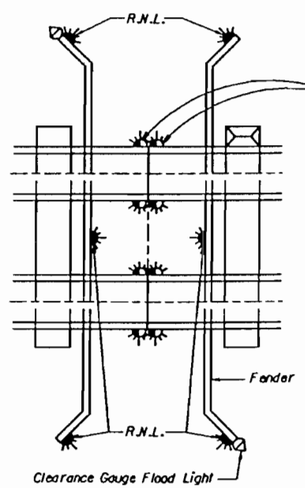

TYPICAL BASCULE BRIDGE NAVIGATION LIGHT SYSTEM DOUBLE LEAF - PARALLEL STRUCTURES

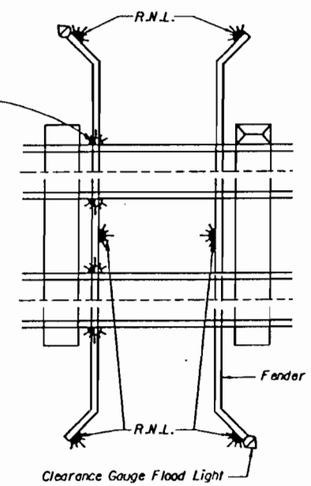

TYPICAL BASCULE BRIDGE NAVIGATION LIGHT SYSTEM SINGLE LEAF - PARALLEL STRUCTURES

R. Jarrett 3-3-95

REVISIONS					
Date	By	Description	Date	By	Description
			92		

	Names	Dates
Drawn by	JSP	10-92
Checked by	AFR	10-92
Designed by	—	—
Checked by	—	—
Approved by	AFR	

ENGINEER OF RECORD: GREINER, INC. P.O. 31646, 7650 WEST COURTNEY CAMPBELL CAUSEWAY TAMPA, FLORIDA 33607-1462

LOGO: Greiner

SEAL:

FLORIDA DEPARTMENT OF TRANSPORTATION
STRUCTURES DESIGN OFFICE

ROAD NO.	COUNTY	PROJECT NO.
884	LEE	5896

SHEET TITLE: NAVIGATION LIGHT SYSTEM DETAILS

PROJECT NAME: MIDPOINT BRIDGE

Drawing No. 1 of 2

Index No. 510

C:\BRIDGES\PROJ\...\BDECMP01.DGN

PROJECT NO.	SHEET NO.
5896	C-115

BX1-127

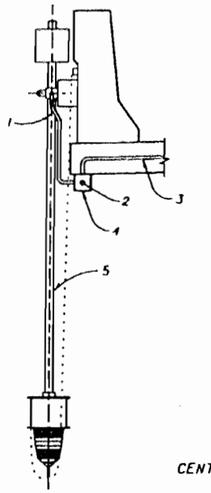

All Components Required as Shown Below

1. 2 ~ No. 12 THWN & 1 No. 12 ground in ¾" liquid tight flex conduit UV treated.
2. 1" Sch. 40 PVC conduit, containing service conductors.
3. Extend ¾" Type A PVC conduit, 2 ~ No. 12 THWN conductors, 1 ~ No. 12 THWN ground thru embedded ¾" PVC conduit to opposite channel light.
4. 6" x 6" x 4" PVC junction box. Connect channel lights to conductors from service point.
5. Stainless steel 2" pipe shall extend 9" below lowest point on bridge superstructure.

CENTER CHANNEL MARKER NAVIGATION LIGHT
FOR FIXED BRIDGES

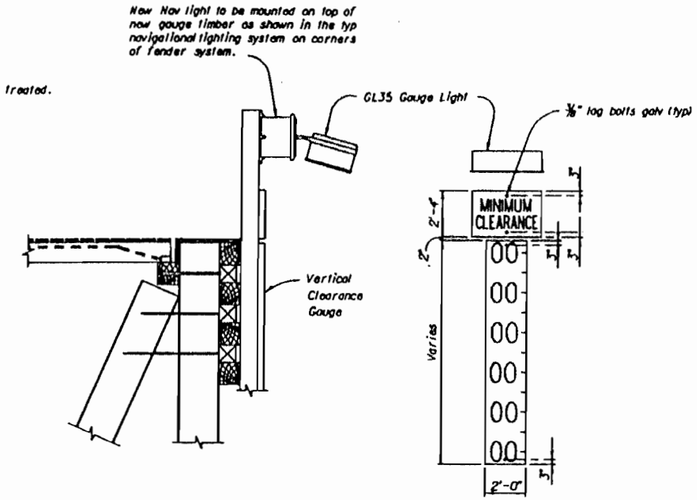

GAUGE LIGHT

CLEARANCE GAUGE DETAILS

Numbered clearance gauge to be furnished by the Contractor. Contractor shall verify in field that the clearance of the bridge agrees with readings of target. If not, the target will be reset.

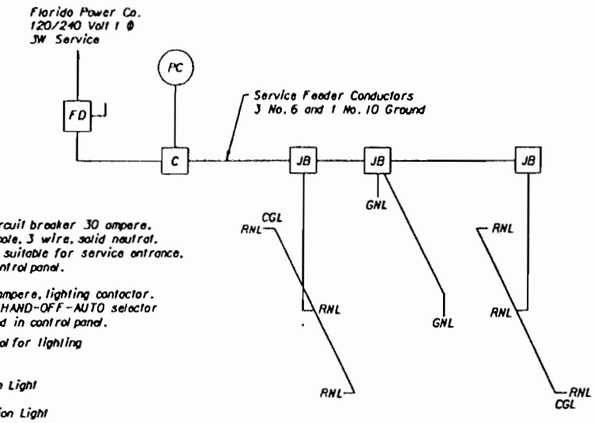

FD Heavy duty, circuit breaker 30 ampere, 240 volts, 2 pole, 3 wire, solid neutral, grounding kit, suitable for service entrance, installed in control panel.

C Two pole, 30 ampere, lighting contactor. Complete with HAND-OFF-AUTO selector switch installed in control panel.

PC Photocell control for lighting contactor.

RNL Red Navigation Light

GNL Green Navigation Light

CGL Clearance Gauge Light

JB Junction Box

TYPICAL LAYOUT OF NAVIGATION LIGHTS
FOR FIXED BRIDGES

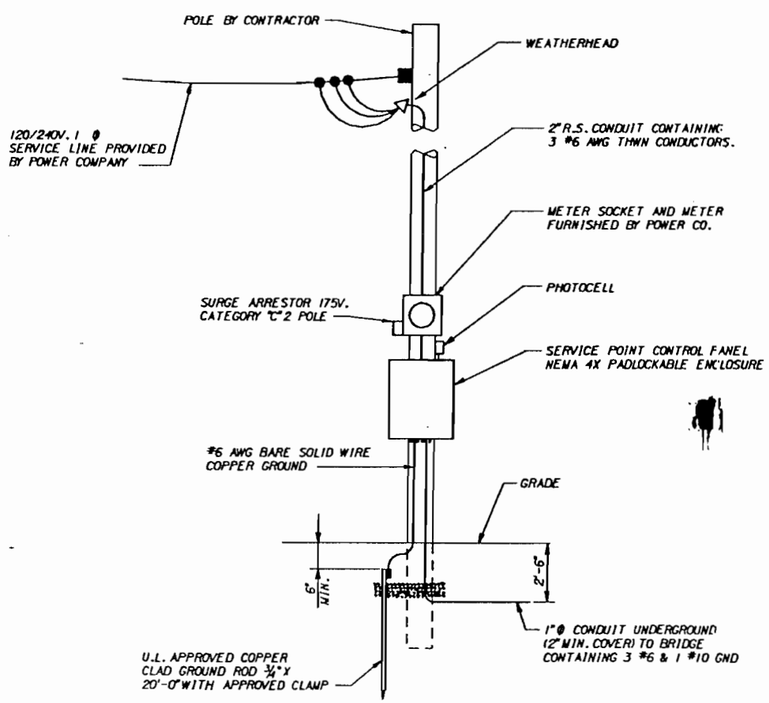

SERVICE POINT DETAIL

SERVICE INSTALLATION SHALL MEET THE REQUIREMENTS OF THE NATIONAL ELECTRIC CODE AND APPLICABLE LOCAL CODES. THE HEIGHT OF THE WEATHERHEAD AND METER ARE AS REQUIRED BY POWER COMPANY.

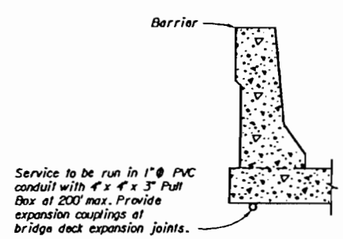

TYPICAL CONDUIT INSTALLATION

NOTES FOR FIXED BRIDGES

1. Install No. 12 AWG galvanized pullwire in each conduit
2. PVC buried in concrete to exit under bridge near navigation light mount
3. All branch wiring to be No. 12 AWG, CU, THWN or equivalent. At no time shall there be more than 120 volts on the fender.
4. All conduits to be PVC UV treated unless otherwise noted or not permitted by local code.
5. All straps to be PVC coated steel and lag screws cadmium plated.
6. Contractor shall obtain direction from the Engineer before fastening anchors into bridge structure.
7. For service feeder wiring runs use 3 No. 6, 1 No. 10 ground. Loads shall be balanced.
8. Approved vandal proof fixture must be used

RED NAVIGATION LIGHT: 180°, 120 volt, 60 watt, minimum 155 mm fresnel lens, vandal proof. Luminous intensity for horizontal beam 30 candela (min.). Vertical divergence at 15 CD intensity, 6° maximum. Shall be equipped with a dual lamp and transfer relay option and bulbs rated minimum 32,000 hours extended life @ 110 volts. Lantern shall be mounted on a stainless steel post including fittings with a total height of 24" above fender. For bridges without fenders, fixture shall be fabricated and mounted in same manner as GREEN NAVIGATION LIGHT at equal height.

GREEN NAVIGATION LIGHT: 360°, 120 volt, 60 watt, minimum 155 mm fresnel lens. Luminous intensity for horizontal beam 30 candela (min.). Vertical divergence at 15 CD intensity, 6° maximum. Shall be equipped with a dual lamp and transfer relay option and bulbs rated minimum 32,000 hours extended life @ 110 volts. Equip with a pivot mount and retrieval chain so that the base can be mounted outside of bridge barrier and lantern can be serviced by reaching over the barrier from inside. Hanger stem shall be long enough so that lantern can be seen from either channel direction when the lantern is in the lowered position. Lantern shall be latchable in the down position.

CLEARANCE GAUGE LIGHT: Angle of illumination 15° to 30° depending on fixture contour. Ballast with high power factor using a 35 watt high pressure sodium lamp. Enclosure to be NEMA 4X cast aluminum housing with epoxy finish enamel. Voltage shall be 110 volts, 60 Hz.

Navigation Light system shall comply with the latest edition of the Code of Federal Regulations, Navigation and Navigable Waters, CFR 33 Part 118, Bridge Lighting and Other Signals.

R. E. Jones 3-3-95

REVISIONS

DATE	BY	DESCRIPTION	DATE	BY	DESCRIPTION	DATE	BY	DESCRIPTION	DATE	BY	DESCRIPTION

	NAME	DATE
DR.BY	KAC	1-94
CHK.BY	GAA	1-94
SUPV.	RFJ	1-94

Greiner
Engineers, Architects and Planners

BOARD OF COUNTY COMMISSIONERS
LEE COUNTY, FLORIDA
DEPARTMENT OF TRANSPORTATION

MIDPOINT BRIDGE
NAVIGATION LIGHT SYSTEM DETAILS

C:\BRIDGES\PROJECTS\C26\000\BDECWP02.DGN

PROJECT NO.	SHEET NO.
5896	C-116

BX1-128

END BENT 1

MARK SIZE	MARK DES	LENGTH FT IN	NO BARS	TYP BAR	STY A	STY G	B FT IN FR	C FT IN FR	D FT IN FR	E FT IN FR	F FT IN FR	H FT IN FR	J FT IN	K FT IN	N	θ
5	E1	12 - 0	156	4	4	4	3 - 1	2 - 5								
5	E2	11 - 11	11	5			2 - 5	4 - 6	2 - 3	0 - 4						
9	E3	87 - 3	6	41			32 - 6	54 - 9					6 - 7		1	
5	E4	83 - 2	4	41			30 - 5	52 - 9					2 - 5		1	
8	E5	84 - 6	3	41			56 - 6	28 - 0					3 - 9		1	
8	E6	15 - 6	18	18	3	3	12 - 10									
8	E8	12 - 4	4	18	3	3	9 - 8									
8	E9	4 - 11	4	18	3	3	2 - 3									
5	E10	4 - 8	210	1			4 - 8									
5	E11	3 - 5	218	1			3 - 5									
4	E12	82 - 7	12	41			45 - 0	37 - 7					2 - 0		1	
6	E13	1 - 6	20	1			1 - 6									
5	E14	5 - 7	8	1			5 - 7	0 - 6								
5	E15	4 - 0	4	4	4	4	1 - 0									
4	E16	0 - 10	10	1			0 - 10									
4	E17	3 - 6	14	1			3 - 6									
4	E18	4 - 6	8	1			4 - 6									
4	E21	3 - 0	10	1			3 - 0									
4	E22	4 - 10	10	1			4 - 10									
4	E23	4 - 6	14	1			4 - 6									
5	E24	7 - 3	4	13			0 - 5	4 - 8	2 - 2						84"	90°
5	E25	3 - 7	4	12			2 - 5	1 - 2								36°
4	E70	3 - 9	54	10			2 - 6	1 - 3								
4	E71	2 - 3	36	1			2 - 3									
5	E72	6 - 6	24	11			0 - 7	2 - 11	2 - 11							
4	E73	5 - 9	12	4	4	4	2 - 0	0 - 5 - 3/4								

PIERS 2, 6, 10 & 60 (4 REQUIRED)

MARK SIZE	MARK DES	LENGTH FT IN	NO BARS	TYP BAR	STY A	STY G	B FT IN FR	C FT IN FR	D FT IN FR	E FT IN FR	F FT IN FR	H FT IN FR	J FT IN	K FT IN	N	θ
8	P1	20 - 4	88	11			14 - 4	3 - 0	3 - 0							
4	P3	20 - 4	60	11			14 - 4	3 - 0	3 - 0							
4	P4	13 - 3	36	4	4	4	3 - 3	3 - 0								
11	P5A	14 - 2	20	10			12 - 2	2 - 0								
11	P5B	16 - 8	20	10			14 - 8	2 - 0								
11	P6	85 - 2	10	41			48 - 4	36 - 10					7 - 6		1	
11	P7	27 - 10	20	1			27 - 10									
7	P8	81 - 8	4	41			44 - 10	36 - 10					4 - 0		1	
7	P9	78 - 0	2	41			43 - 0	35 - 0					4 - 0		1	
7	P10	72 - 4	2	41			40 - 2	32 - 2					4 - 0		1	
7	P11	66 - 9	2	41			37 - 5	29 - 4					4 - 0		1	
7	P12	61 - 2	2	41			34 - 7	26 - 7					4 - 0		1	
4	P13	18 - 1	14	12			14 - 3	3 - 10								16°
5	P14	14 - 4	40	1			14 - 4									
5	P15	14 - 4	32	1			14 - 4									
11	P17	48 - 1	14	1			48 - 1									
5	P40	VARIES 17 - 11 TO 10 - 1	4 SETS OF 25	4	4	4	VARIES 6 - 0 TO 2 - 1	2 - 5/4								
5	P41	17 - 11	88	4	4	4	6 - 0	2 - 5/4								
4	P42	4 - 8	37	18	1	3	3 - 6									
5	P43	6 - 3	192	11			0 - 9	2 - 9	2 - 9							
4	P45	6 - 6	32	1			6 - 6									
4	P46	1 - 11	144	18	1	3	0 - 9									
4	P47	2 - 3	72	1			2 - 3									
4	P48	4 - 2	108	11			1 - 6	1 - 4	1 - 4							

PIER 63

MARK SIZE	MARK DES	LENGTH FT IN	NO BARS	TYP BAR	STY A	STY G	B FT IN FR	C FT IN FR	D FT IN FR	E FT IN FR	F FT IN FR	H FT IN FR	J FT IN	K FT IN	N	θ
8	P1	20 - 4	88	11			14 - 4	3 - 0	3 - 0							
4	P3	20 - 4	60	11			14 - 4	3 - 0	3 - 0							
4	P4	13 - 3	56	4	4	4	3 - 3	3 - 0								
11	P5A	16 - 2	20	10			14 - 2	2 - 0								
11	P5B	18 - 8	20	10			16 - 8	2 - 0								
11	P6	85 - 2	10	41			48 - 4	36 - 10					7 - 6		1	
11	P7	27 - 10	20	1			27 - 10									
7	P8	81 - 8	4	41			44 - 10	36 - 10					4 - 0		1	
7	P9	78 - 0	2	41			43 - 0	35 - 0					4 - 0		1	
7	P10	72 - 4	2	41			40 - 2	32 - 2					4 - 0		1	
7	P11	66 - 9	2	41			37 - 5	29 - 4					4 - 0		1	
7	P12	61 - 2	2	41			34 - 7	26 - 7					4 - 0		1	
4	P13	18 - 1	14	12			14 - 3	3 - 10								16°
5	P14	14 - 4	40	1			14 - 4									
5	P15	14 - 4	32	1			14 - 4									
11	P17	48 - 1	14	1			48 - 1									
5	P40	VARIES 17 - 11 TO 10 - 1	4 SETS OF 25	4	4	4	VARIES 6 - 0 TO 2 - 1	2 - 5/4								
5	P41	17 - 11	88	4	4	4	6 - 0	2 - 5/4								
4	P42	4 - 8	37	18	1	3	3 - 6									
5	P43	6 - 3	192	11			0 - 9	2 - 9	2 - 9							
4	P45	6 - 6	32	1			6 - 6									
4	P46	1 - 11	144	18	1	3	0 - 9									
4	P47	2 - 3	72	1			2 - 3									
4	P48	4 - 2	108	11			1 - 6	1 - 4	1 - 4							

NOTE:
FOR STANDARD BAR BENDING DETAILS, SEE SHEET A-6. REINFORCING STEEL SHALL BE ASTM, A615, GRADE 60.

3-3-95

REVISIONS

DATE	BY	DESCRIPTION	DATE	BY	DESCRIPTION	DATE	BY	DESCRIPTION	DATE	BY	DESCRIPTION

	NAME	DATE
DR. BY	SG	7/94
CHK. BY	GCG	7/94

Greiner, Inc.

Engineers, Architects and Planners

BOARD OF COUNTY COMMISSIONERS
LEE COUNTY, FLORIDA

MIDPOINT BRIDGE
REINFORCING BAR LIST (1)

$IMDAT, C:\$5000.DGN, FG, BBARWPOS, FGBJ

PLEECTY

PROJECT NO	SHEET NO
5896	C-117

BX1-129

PIER 13

MARK SIZE	MARK DES	LENGTH FT IN	NO BARS	TYP BAR	STY A	STY G	B FT IN FR	C FT IN FR	D FT IN FR	E FT IN FR	F FT IN FR	H FT IN FR	J FT IN	K FT IN	N	Θ
8	P1	20 - 4	88	11			14 - 4	3 - 0	3 - 0							
4	P3	20 - 4	60	11			14 - 4	3 - 0	3 - 0							
4	P4	13 - 3	32	4	4	4	3 - 3	3 - 0								
11	P5A	14 - 4	20	10			12 - 4	2 - 0								
11	P5B	15 - 9	20	10			13 - 9	2 - 0								
11	P6	85 - 2	10	41			48 - 4	36 - 10					7 - 6		1	
11	P7	27 - 10	20	1			27 - 10									
7	P8	81 - 8	4	41			44 - 10	36 - 10					4 - 0		1	
7	P9	78 - 0	2	41			43 - 0	35 - 0					4 - 0		1	
7	P10	72 - 4	2	41			40 - 2	32 - 2					4 - 0		1	
7	P11	66 - 9	2	41			37 - 5	29 - 4					4 - 0		1	
7	P12	61 - 2	2	41			34 - 7	26 - 7					4 - 0		1	
4	P13	18 - 1	14	12			14 - 3	3 - 10								16"
5	P14	14 - 4	40	1			14 - 4									
5	P15	14 - 4	32	1			14 - 4									
11	P17	48 - 1	14	1			48 - 1									
5	P40	VARIES 17 - 11 TO 10 - 1	4 SETS OF 25	4	4	4	VARIES 6 - 0 TO 2 - 1	2 - 5¼								
5	P41	17 - 11	88	4	4	4	6 - 0	2 - 5¼								
4	P42	4 - 8	37	18	1	3	3 - 6									
4	P44	6 - 2	64	11			0 - 8	2 - 9	2 - 9							
4	P45	6 - 6	16	1			6 - 6									
4	P47	2 - 3	72	1			2 - 3									
4	P48	4 - 2	108	11			1 - 6	1 - 4	1 - 4							

PIER 14

MARK SIZE	MARK DES	LENGTH FT IN	NO BARS	TYP BAR	STY A	STY G	B FT IN FR	C FT IN FR	D FT IN FR	E FT IN FR	F FT IN FR	H FT IN FR	J FT IN	K FT IN	N	Θ
8	P1	20 - 4	88	11			14 - 4	3 - 0	3 - 0							
4	P3	20 - 4	60	11			14 - 4	3 - 0	3 - 0							
4	P4	13 - 3	28	4	4	4	3 - 3	3 - 0								
11	P5A	14 - 4	20	10			12 - 4	2 - 0								
11	P5B	15 - 2	20	10			13 - 2	2 - 0								
11	P6	85 - 2	10	41			48 - 4	36 - 10					7 - 6		1	
11	P7	27 - 10	20	1			27 - 10									
7	P8	81 - 8	4	41			44 - 10	36 - 10					4 - 0		1	
7	P9	78 - 0	2	41			43 - 0	35 - 0					4 - 0		1	
7	P10	72 - 4	2	41			40 - 2	32 - 2					4 - 0		1	
7	P11	66 - 9	2	41			37 - 5	29 - 4					4 - 0		1	
7	P12	61 - 2	2	41			34 - 7	26 - 7					4 - 0		1	
4	P13	18 - 1	14	12			14 - 3	3 - 10								16"
5	P14	14 - 4	40	1			14 - 4									
5	P15	14 - 4	32	1			14 - 4									
11	P17	48 - 1	14	1			48 - 1									
5	P40	VARIES 17 - 11 TO 10 - 1	4 SETS OF 25	4	4	4	VARIES 6 - 0 TO 2 - 1	2 - 5¼								
5	P41	17 - 11	88	4	4	4	6 - 0	2 - 5¼								
4	P42	4 - 8	37	18	1	3	3 - 6									
5	P43	6 - 3	192	11			0 - 9	2 - 9	2 - 9							
4	P45	6 - 6	32	1			6 - 6									
4	P46	1 - 11	144	18	1	3	0 - 9									
4	P47	2 - 3	72	1			2 - 3									
4	P48	4 - 2	108	11			1 - 6	1 - 4	1 - 4							

PIER 15

MARK SIZE	MARK DES	LENGTH FT IN	NO BARS	TYP BAR	STY A	STY G	B FT IN FR	C FT IN FR	D FT IN FR	E FT IN FR	F FT IN FR	H FT IN FR	J FT IN	K FT IN	N	Θ
8	P1	20 - 4	88	11			14 - 4	3 - 0	3 - 0							
4	P3	20 - 4	60	11			14 - 4	3 - 0	3 - 0							
4	P4	13 - 3	22	4	4	4	3 - 3	3 - 0								
11	P5A	14 - 0	20	10			12 - 0	2 - 0								
11	P5B	14 - 5	20	10			12 - 5	2 - 0								
11	P6	85 - 2	10	41			48 - 4	36 - 10					7 - 6		1	
11	P7	27 - 10	20	1			27 - 10									
7	P8	81 - 8	4	41			44 - 10	36 - 10					4 - 0		1	
7	P9	78 - 0	2	41			43 - 0	35 - 0					4 - 0		1	
7	P10	72 - 4	2	41			40 - 2	32 - 2					4 - 0		1	
7	P11	66 - 9	2	41			37 - 5	29 - 4					4 - 0		1	
7	P12	61 - 2	2	41			34 - 7	26 - 7					4 - 0		1	
4	P13	18 - 1	14	12			14 - 3	3 - 10								16"
5	P14	14 - 4	40	1			14 - 4									
5	P15	14 - 4	32	1			14 - 4									
11	P17	48 - 1	14	1			48 - 1									
5	P40	VARIES 17 - 11 TO 10 - 1	4 SETS OF 25	4	4	4	VARIES 6 - 0 TO 2 - 1	2 - 5¼								
5	P41	17 - 11	88	4	4	4	6 - 0	2 - 5¼								
4	P42	4 - 8	37	18	1	3	3 - 6									
4	P44	6 - 8	64	11			0 - 8	3 - 0	3 - 0							
4	P45	6 - 6	16	1			6 - 6									
4	P47	2 - 3	72	1			2 - 3									
4	P48	4 - 2	108	11			1 - 6	1 - 7	1 - 7							

PIER 16

MARK SIZE	MARK DES	LENGTH FT IN	NO BARS	TYP BAR	STY A	STY G	B FT IN FR	C FT IN FR	D FT IN FR	E FT IN FR	F FT IN FR	H FT IN FR	J FT IN	K FT IN	N	Θ
8	P1	20 - 4	88	11			14 - 4	3 - 0	3 - 0							
4	P3	20 - 4	60	11			14 - 4	3 - 0	3 - 0							
4	P4	13 - 3	16	4	4	4	3 - 3	3 - 0								
11	P5	13 - 7	40	10			11 - 7	2 - 0								
11	P6	85 - 2	10	41			48 - 4	36 - 10					7 - 6		1	
11	P7	27 - 10	20	1			27 - 10									
7	P8	81 - 8	4	41			44 - 10	36 - 10					4 - 0		1	
7	P9	78 - 0	2	41			43 - 0	35 - 0					4 - 0		1	
7	P10	72 - 4	2	41			40 - 2	32 - 2					4 - 0		1	
7	P11	66 - 9	2	41			37 - 5	29 - 4					4 - 0		1	
7	P12	61 - 2	2	41			34 - 7	26 - 7					4 - 0		1	
4	P13	18 - 1	14	12			14 - 3	3 - 10								16"
5	P14	14 - 4	40	1			14 - 4									
5	P15	14 - 4	32	1			14 - 4									
11	P17	48 - 1	14	1			48 - 1									
5	P40	VARIES 17 - 11 TO 10 - 1	4 SETS OF 25	4	4	4	VARIES 6 - 0 TO 2 - 1	2 - 5¼								
5	P41	17 - 11	88	4	4	4	6 - 0	2 - 5¼								
4	P42	4 - 8	37	18	1	3	3 - 6									
4	P44	7 - 2	64	11			0 - 8	3 - 3	3 - 3							
4	P45	6 - 6	16	1			6 - 6									
4	P47	2 - 3	72	1			2 - 3									
4	P48	5 - 2	108	11			1 - 6	1 - 10	1 - 10							

NOTE:
FOR STANDARD BAR BENDING DETAILS, SEE SHEET A-6. REINFORCING STEEL SHALL BE ASTM. A615, GRADE 60.

3-3-95

REVISIONS

DATE	BY	DESCRIPTION	DATE	BY	DESCRIPTION	DATE	BY	DESCRIPTION	DATE	BY	DESCRIPTION

	NAME	DATE
DR. BY	SG	7/94
CHK. BY	GCG	7/94

Greiner Engineers, Architects and Planners

BOARD OF COUNTY COMMISSIONERS
LEE COUNTY, FLORIDA

MIDPOINT BRIDGE

C:\DGN\ 126000 CADD FG BBA4WPST.FG3u

PROJECT NO	SHEET NO
5896	C-118

BX1-130

MARK SIZE	MARK DES	LENGTH FT IN	NO BARS	TYP BAR	STY A	STY G	B FT IN FR	C FT IN FR	D FT IN FR	E FT IN FR	F FT IN FR	H FT IN FR	J FT IN	K FT IN	N	θ
PIER 17 & 28 (2 REQUIRED)																
8	P1	20 - 4	88	11			14 - 4	3 - 0	3 - 0							
4	P3	20 - 4	60	11			14 - 4	3 - 0	3 - 0							
4	P4	13 - 3	16	4	4	4	3 - 3	3 - 0								
11	P5	13 - 3	40	10			11 - 3	2 - 0								
11	P6	85 - 0	10	41			48 - 3	36 - 9					7 - 6		1	
11	P7	27 - 9	20	1			27 - 9									
7	P8	81 - 6	4	41			44 - 9	36 - 9					4 - 0		1	
7	P9	77 - 10	2	41			42 - 11	34 - 11					4 - 0		1	
7	P10	72 - 2	2	41			40 - 1	32 - 1					4 - 0		1	
7	P11	66 - 7	2	41			37 - 4	29 - 3					4 - 0		1	
7	P12	61 - 0	2	41			34 - 6	26 - 6					4 - 0		1	
4	P13	18 - 1	14	12			14 - 3	3 - 10								16°
5	P14	14 - 4	40	1			14 - 4									
5	P15	14 - 4	32	1			14 - 4									
11	P17	48 - 0	14	1			48 - 0									
5	P40	VARIES 17 - 11 TO 10 - 1	4 SETS OF 25	4	4	4	VARIES 6 - 0 TO 2 - 1	2 - 5¼								
5	P41	17 - 11	88	4	4	4	6 - 0	2 - 5¼								
4	P42	4 - 8	37	18	1	3	3 - 6									
4	P44	7 - 6	64	11			0 - 8	3 - 5	3 - 5							
4	P45	6 - 6	16	1			6 - 6									
4	P47	2 - 3	72	1			2 - 3									
4	P48	5 - 6	108	11			1 - 6	2 - 0	2 - 0							
PIER 18, 22 & 26 (3 REQUIRED)																
8	P1	20 - 4	88	11			14 - 4	3 - 0	3 - 0							
4	P3	20 - 4	60	11			14 - 4	3 - 0	3 - 0							
4	P4	13 - 3	16	4	4	4	3 - 3	3 - 0								
11	P5	13 - 4	40	10			11 - 4	2 - 0								
11	P6	85 - 0	10	41			48 - 3	36 - 9					7 - 6		1	
11	P7	27 - 9	20	1			27 - 9									
7	P8	81 - 6	4	41			44 - 9	36 - 9					4 - 0		1	
7	P9	77 - 10	2	41			42 - 11	34 - 11					4 - 0		1	
7	P10	72 - 2	2	41			40 - 1	32 - 1					4 - 0		1	
7	P11	66 - 7	2	41			37 - 4	29 - 3					4 - 0		1	
7	P12	61 - 0	2	41			34 - 6	26 - 6					4 - 0		1	
4	P13	18 - 1	14	12			14 - 3	3 - 10								16°
5	P14	14 - 4	40	1			14 - 4									
5	P15	14 - 4	32	1			14 - 4									
11	P17	48 - 0	14	1			48 - 0									
5	P40	VARIES 17 - 11 TO 10 - 1	4 SETS OF 25	4	4	4	VARIES 6 - 0 TO 2 - 1	2 - 5¼								
5	P41	17 - 11	88	4	4	4	6 - 0	2 - 5¼								
4	P42	4 - 8	37	18	1	3	3 - 6									
5	P43	7 - 7	192	11			0 - 9	3 - 5	3 - 5							
4	P45	6 - 6	32	1			6 - 6									
4	P46	1 - 11	144	18	1	3	0 - 9									
4	P47	2 - 3	72	1			2 - 3									
4	P48	5 - 6	108	11			1 - 6	2 - 0	2 - 0							

MARK SIZE	MARK DES	LENGTH FT IN	NO BARS	TYP BAR	STY A	STY G	B FT IN FR	C FT IN FR	D FT IN FR	E FT IN FR	F FT IN FR	H FT IN FR	J FT IN	K FT IN	N	θ
PIER 19, 20, 21, 23, 24, 25 & 27 (7 REQUIRED)																
8	P1	20 - 4	88	11			14 - 4	3 - 0	3 - 0							
4	P3	20 - 4	60	11			14 - 4	3 - 0	3 - 0							
4	P4	13 - 3	16	4	4	4	3 - 3	3 - 0								
11	P5	13 - 4	40	10			11 - 4	2 - 0								
11	P6	85 - 0	10	41			48 - 3	36 - 9					7 - 6		1	
11	P7	27 - 9	20	1			27 - 9									
7	P8	81 - 6	4	41			44 - 9	36 - 9					4 - 0		1	
7	P9	77 - 10	2	41			42 - 11	34 - 11					4 - 0		1	
7	P10	72 - 2	2	41			40 - 1	32 - 1					4 - 0		1	
7	P11	66 - 7	2	41			37 - 4	29 - 3					4 - 0		1	
7	P12	61 - 0	2	41			34 - 6	26 - 6					4 - 0		1	
4	P13	18 - 1	14	12			14 - 3	3 - 10								16°
5	P14	14 - 4	40	1			14 - 4									
5	P15	14 - 4	32	1			14 - 4									
11	P17	48 - 0	14	1			48 - 0									
5	P40	VARIES 17 - 11 TO 10 - 1	4 SETS OF 25	4	4	4	VARIES 6 - 0 TO 2 - 1	2 - 5¼								
5	P41	17 - 11	88	4	4	4	6 - 0	2 - 5¼								
4	P42	4 - 8	37	18	1	3	3 - 6									
4	P44	7 - 6	64	11			0 - 8	3 - 5	3 - 5							
4	P45	6 - 6	16	1			6 - 6									
4	P47	2 - 3	72	1			2 - 3									
4	P48	5 - 6	108	11			1 - 6	2 - 0	2 - 0							
PIER 29																
8	P1	20 - 4	88	11			14 - 4	3 - 0	3 - 0							
4	P3	20 - 4	60	11			14 - 4	3 - 0	3 - 0							
4	P4	13 - 3	20	4	4	4	3 - 3	3 - 0								
11	P5	13 - 5	40	10			11 - 5	2 - 0								
11	P6	85 - 0	10	41			48 - 3	36 - 9					7 - 6		1	
11	P7	27 - 9	20	1			27 - 9									
7	P8	81 - 6	4	41			44 - 9	36 - 9					4 - 0		1	
7	P9	77 - 10	2	41			42 - 11	34 - 11					4 - 0		1	
7	P10	72 - 2	2	41			40 - 1	32 - 1					4 - 0		1	
7	P11	66 - 7	2	41			37 - 4	29 - 3					4 - 0		1	
7	P12	61 - 0	2	41			34 - 6	26 - 6					4 - 0		1	
4	P13	18 - 1	14	12			14 - 3	3 - 10								16°
5	P14	14 - 4	40	1			14 - 4									
5	P15	14 - 4	32	1			14 - 4									
11	P17	48 - 0	14	1			48 - 0									
5	P40	VARIES 17 - 11 TO 10 - 1	4 SETS OF 25	4	4	4	VARIES 6 - 0 TO 2 - 1	2 - 5¼								
5	P41	17 - 11	88	4	4	4	6 - 0	2 - 5¼								
4	P42	4 - 8	37	18	1	3	3 - 6									
4	P44	7 - 6	64	11			0 - 8	3 - 5	3 - 5							
4	P45	6 - 6	16	1			6 - 6									
4	P47	2 - 3	72	1			2 - 3									
4	P48	5 - 6	108	11			1 - 6	2 - 0	2 - 0							

NOTE:
FOR STANDARD BAR BENDING DETAILS, SEE SHEET A-6. REINFORCING STEEL SHALL BE ASTM. A615, GRADE 60.

3-3-95

REVISIONS

DATE	BY	DESCRIPTION	DATE	BY	DESCRIPTION	DATE	BY	DESCRIPTION	DATE	BY	DESCRIPTION

	NAME	DATE
DR. BY	SG	7/94

Greiner Engineers, Architects and Planners

BOARD OF COUNTY COMMISSIONERS
LEE COUNTY, FLORIDA

MIDPOINT BRIDGE

PROJECT NO	SHEET NO
5896	C-119

BX1-131

MARK SIZE	MARK DES	LENGTH FT IN	NO BARS	TYP BAR	STY A	STY G	B FT IN FR	C FT IN FR	D FT IN FR	E FT IN FR	F FT IN FR	H FT IN FR	J FT IN	K FT IN	N	θ
PIER 30																
8	P1	20 - 4	88	11			14 - 4	3 - 0	3 - 0							
4	P3	20 - 4	60	11			14 - 4	3 - 0	3 - 0							
4	P4	13 - 3	24	4	4	4	3 - 3	3 - 0								
11	P5	13 - 11	40	10			11 - 11	2 - 0								
11	P6	85 - 0	10	41			48 - 3	36 - 9					7 - 6		1	
11	P7	27 - 9	20	1			27 - 9									
7	P8	81 - 6	4	41			44 - 9	36 - 9					4 - 0		1	
7	P9	77 - 10	2	41			42 - 11	34 - 11					4 - 0		1	
7	P10	72 - 2	2	41			40 - 1	32 - 1					4 - 0		1	
7	P11	66 - 7	2	41			37 - 4	29 - 3					4 - 0		1	
7	P12	61 - 0	2	41			34 - 6	26 - 6					4 - 0		1	
4	P13	18 - 1	14	12			14 - 3	3 - 10								16"
5	P14	14 - 4	40	1			14 - 4									
5	P15	14 - 4	32	1			14 - 4									
11	P17	48 - 0	14	1			48 - 0									
5	P40	VARIES 17 - 11 TO 10 - 1	4 SETS OF 25	4	4	4	VARIES 6 - 0 TO 2 - 1	2 - 5 - 1/4								
5	P41	17 - 11	88	4	4	4	6 - 0	2 - 5 - 1/4								
4	P42	4 - 8	37	18	1	3	3 - 6									
5	P43	7 - 7	192	11			0 - 9	3 - 5	3 - 5							
4	P45	6 - 6	32	1			6 - 6									
4	P46	1 - 11	144	18	1	3	0 - 9									
4	P47	2 - 3	72	1			2 - 3									
4	P48	5 - 6	108	11			1 - 6	2 - 0	2 - 0							
PIER 31																
8	P1	20 - 4	88	11			14 - 4	3 - 0	3 - 0							
4	P3	20 - 4	60	11			14 - 4	3 - 0	3 - 0							
4	P4	13 - 3	32	4	4	4	3 - 3	3 - 0								
11	P5	14 - 11	40	10			12 - 11	2 - 0								
11	P6	85 - 0	10	41			48 - 3	36 - 9					7 - 6		1	
11	P7	27 - 9	20	1			27 - 9									
7	P8	81 - 6	4	41			44 - 9	36 - 9					4 - 0		1	
7	P9	77 - 10	2	41			42 - 11	34 - 11					4 - 0		1	
7	P10	72 - 2	2	41			40 - 1	32 - 1					4 - 0		1	
7	P11	66 - 7	2	41			37 - 4	29 - 3					4 - 0		1	
7	P12	61 - 0	2	41			34 - 6	26 - 6					4 - 0		1	
4	P13	18 - 1	14	12			14 - 3	3 - 10								16"
5	P14	14 - 4	40	1			14 - 4									
5	P15	14 - 4	32	1			14 - 4									
11	P17	48 - 0	14	1			48 - 0									
5	P40	VARIES 17 - 11 TO 10 - 1	4 SETS OF 25	4	4	4	VARIES 6 - 0 TO 2 - 1	2 - 5 - 1/4								
5	P41	17 - 11	88	4	4	4	6 - 0	2 - 5 - 1/4								
4	P42	4 - 8	37	18	1	3	3 - 6									
4	P44	7 - 6	64	11			0 - 8	3 - 5	3 - 5							
4	P45	6 - 6	16	1			6 - 6									
4	P47	2 - 3	72	1			2 - 3									
4	P48	5 - 6	108	11			1 - 6	2 - 0	2 - 0							

MARK SIZE	MARK DES	LENGTH FT IN	NO BARS	TYP BAR	STY A	STY G	B FT IN FR	C FT IN FR	D FT IN FR	E FT IN FR	F FT IN FR	H FT IN FR	J FT IN	K FT IN	N	θ
PIERS 3, 4, 5, 7, 8, 9, 11, 59, 61 & 62 (10 REQUIRED)																
8	P1	20 - 4	88	11			14 - 4	3 - 0	3 - 0							
4	P3	20 - 4	60	11			14 - 4	3 - 0	3 - 0							
4	P4	13 - 3	36	4	4	4	3 - 3	3 - 0								
11	P5A	14 - 2	20	10			12 - 2	2 - 0								
11	P5B	16 - 8	20	10			14 - 8	2 - 0								
11	P6	85 - 2	10	41			48 - 4	36 - 10					7 - 6		1	
11	P7	27 - 10	20	1			27 - 10									
7	P8	81 - 8	4	41			44 - 10	36 - 10					4 - 0		1	
7	P9	78 - 0	2	41			43 - 0	35 - 0					4 - 0		1	
7	P10	72 - 4	2	41			40 - 2	32 - 2					4 - 0		1	
7	P11	66 - 9	2	41			37 - 5	29 - 4					4 - 0		1	
7	P12	61 - 2	2	41			34 - 7	26 - 7					4 - 0		1	
4	P13	18 - 1	14	12			14 - 3	3 - 10								16"
5	P14	14 - 4	40	1			14 - 4									
5	P15	14 - 4	32	1			14 - 4									
11	P17	48 - 1	14	1			48 - 1									
5	P40	VARIES 17 - 11 TO 10 - 1	4 SETS OF 25	4	4	4	VARIES 6 - 0 TO 2 - 1	2 - 5 1/4								
5	P41	17 - 11	88	4	4	4	6 - 0	2 - 5 1/4								
4	P42	4 - 8	37	18	1	3	3 - 6									
4	P44	6 - 2	64	11			0 - 8	2 - 9	2 - 9							
4	P45	6 - 6	16	1			6 - 6									
4	P47	2 - 3	72	1			2 - 3									
4	P48	4 - 2	108	11			1 - 6	1 - 4	1 - 4							
PIER 12																
8	P1	20 - 4	88	11			14 - 4	3 - 0	3 - 0							
4	P3	20 - 4	60	11			14 - 4	3 - 0	3 - 0							
4	P4	13 - 3	34	4	4	4	3 - 3	3 - 0								
11	P5A	14 - 2	20	10			12 - 2	2 - 0								
11	P5B	16 - 4	20	10			14 - 4	2 - 0								
11	P6	85 - 2	10	41			48 - 4	36 - 10					7 - 6		1	
11	P7	27 - 10	20	1			27 - 10									
7	P8	81 - 8	4	41			44 - 10	36 - 10					4 - 0		1	
7	P9	78 - 0	2	41			43 - 0	35 - 0					4 - 0		1	
7	P10	72 - 4	2	41			40 - 2	32 - 2					4 - 0		1	
7	P11	66 - 9	2	41			37 - 5	29 - 4					4 - 0		1	
7	P12	61 - 2	2	41			34 - 7	26 - 7					4 - 0		1	
4	P13	18 - 1	14	12			14 - 3	3 - 10								16"
5	P14	14 - 4	40	1			14 - 4									
5	P15	14 - 4	32	1			14 - 4									
11	P17	48 - 1	14	1			48 - 1									
5	P40	VARIES 17 - 11 TO 10 - 1	4 SETS OF 25	4	4	4	VARIES 6 - 0 TO 2 - 1	2 - 5 1/4								
5	P41	17 - 11	88	4	4	4	6 - 0	2 - 5 1/4								
4	P42	4 - 8	37	18	1	3	3 - 6									
4	P44	6 - 2	64	11			0 - 8	2 - 9	2 - 9							
4	P45	6 - 6	16	1			6 - 6									
4	P47	2 - 3	72	1			2 - 3									
4	P48	4 - 2	108	11			1 - 6	1 - 4	1 - 4							

NOTE:
FOR STANDARD BAR BENDING DETAILS, SEE SHEET A-6. REINFORCING STEEL SHALL BE ASTM, A615, GRADE 60.

3-3-95

REVISIONS											
DATE	BY	DESCRIPTION	DATE	BY	DESCRIPTION	DATE	BY	DESCRIPTION	DATE	BY	DESCRIPTION

	NAME	DATE
DR. BY	SG	7/94
CHK. BY	GCG	7/94

Greiner Engineers, Architects and Planners

BOARD OF COUNTY COMMISSIONERS
LEE COUNTY, FLORIDA

MIDPOINT BRIDGE
REINFORCING BAR LIST (1)

©INDIAN CADD FG BBARJPG FSEJ

PIER 32

MARK SIZE	MARK DES	LENGTH FT IN	NO BARS	TYP BAR	STY A	STY G	B FT IN FR	C FT IN FR	D FT IN FR	E FT IN FR	F FT IN FR	H FT IN FR	J FT IN	K FT IN	N	O
10	P1	41 - 0	64	18	3	3	37 - 4									
10	P2	VARIES 33 - 7 TO 40 - 4	2 SETS OF 8	18	3	3	VARIES 29 - 11 TO 36 - 7 - ¼									
10	P3	VARIES 25 - 4 TO 28 - 3	2 SETS OF 4	18	3	3	VARIES 21 - 8 TO 24 - 6 - ½									
10	P4	VARIES 51 - 10 TO 57 - 0	2 SETS OF 5	18	3	3	VARIES 48 - 1 - ¼ TO 53 - 3 - ¼									
10	P5A	VARIES 40 - 10 TO 44 - 2	2 SETS OF 6	17	3		VARIES 39 - 0 TO 42 - 4									
10	P5B	VARIES 28 - 10 TO 32 - 2	2 SETS OF 6	17	3		VARIES 27 - 0 TO 30 - 4									
10	P6A	44 - 6	23	17	3		42 - 8									
10	P6B	32 - 6	23	17	3		30 - 8									
6	P7A	VARIES 36 - 11 TO 45 - 3	2 SETS OF 12	1			VARIES 36 - 11 TO 45 - 3									
6	P7B	VARIES 15 - 11 TO 24 - 3	2 SETS OF 12	1			VARIES 15 - 11 TO 24 - 3									
6	P8A	45 - 8	34	1			45 - 8									
6	P8B	24 - 8	34	1			24 - 8									
6	P9	VARIES 25 - 4 TO 40 - 3	2 SETS OF 10	18	3	3	VARIES 21 - 8 TO 36 - 7									
6	P10	39 - 4	48	18	3	3	37 - 4									
10	P11A	VARIES 41 - 4 TO 50 - 5	2 SETS OF 13	17	3		VARIES 39 - 6 TO 48 - 7									
10	P11B	VARIES 19 - 0 TO 28 - 1	2 SETS OF 13	17	3		VARIES 17 - 2 TO 26 - 3									
10	P12A	50 - 10	34	17	3		49 - 0									
10	P12B	28 - 6	34	17	3		26 - 8									
6	P13A	21 - 2	16	1			21 - 2									
6	P13B	47 - 9	16	1			47 - 9									
6	P13C	18 - 9	32	13			12 - 6 - ¼	3 - 1	3 - 1						51X	40X
6	P14	VARIES 23 - 4 TO 36 - 7	2 SETS OF 9	1			VARIES 23 - 3 - ¾ TO 36 - 7									
6	P15	37 - 4	48	1			37 - 4									
4	P16	6 - 4	120	1			6 - 4									
4	P17	6 - 4	136	1			6 - 4									
5	P18	10 - 2	51	11			4 - 6	2 - 10	2 - 10							
4	P19	79 - 11	6	41			43 - 8	36 - 3					2 - 5		1	
4	P20	8 - 4	79	11			2 - 0	3 - 2	3 - 2							
5	P21	11 - 2	106	10			9 - 8	1 - 6								
5	P22	VARIES 11 - 10 TO 19 - 2	4 SETS OF 23	4	4	4	VARIES 2 - 7 TO 6 - 3	2 - 10								
4	P23	5 - 8	26	18	1	3	4 - 6									
4	P25	79 - 11	6	41			43 - 8	36 - 3					2 - 5		1	
4	P26	73 - 5	2	41			40 - 5	33 - 0					2 - 5		1	
4	P27	66 - 7	2	41			37 - 0	29 - 7					2 - 5		1	
4	P28	59 - 7	2	41			33 - 6	26 - 1					2 - 5		1	
4	P29	53 - 11	4	41			30 - 2	23 - 9					2 - 5		1	
11	P30	79 - 10	6	41			39 - 11	39 - 11					2 - 4		1	
11	P31	20 - 9	32	1			20 - 9									
4	P32	15 - 3	12	12			13 - 3	2 - 0								16

PIER 32 (CONT.)

MARK SIZE	MARK DES	LENGTH FT IN	NO BARS	TYP BAR	STY A	STY G	B FT IN FR	C FT IN FR	D FT IN FR	E FT IN FR	F FT IN FR	H FT IN FR	J FT IN	K FT IN	N	O
6	P01	5 - 11	32	23			2 - 7	0 - 2 - ¼	2 - 7							
4	P01	1 - 8	48	1			1 - 8									
4	P44	7 - 1	32	11			0 - 6 - ¼	3 - 3	3 - 3							
4	P45	6 - 6	8	1			6 - 6									
4	P47	2 - 3	45	1			2 - 3									
4	P47A	2 - 0	40	1			2 - 0									
4	P48	5 - 10	102	11			1 - 6	2 - 2	2 - 2							
8	P50	4 - 10	80	17	1		3 - 9									

NOTE:
FOR STANDARD BAR BENDING DETAILS, SEE SHEET A-6. REINFORCING STEEL SHALL BE ASTM, A615, GRADE 60.

HDR 6/ MAY 96

FINLEY McNARY/JANSSEN SPAANS
a Joint Venture

Finley McNary Engineers, Inc
1391 Timberlane Road Suite 200
Tallahassee, Florida 32312-1721

Janssen & Spaans Engineers, Inc.
2825 East 56th Street
Indianapolis, Indiana 46220

REVISIONS

DATE	BY	DESCRIPTION	DATE	BY	DESCRIPTION	DATE	BY	DESCRIPTION	DATE	BY

	NAME	DATE
DR. BY	J.L.S.	1/96
CHK. BY	C.W.N.	1/96
SUPV.	H.D.R.	1/96

FINLEY McNARY/JANSSEN SPAANS

BOARD OF COUNTY COMMISSIONERS
LEE COUNTY, FLORIDA
DEPARTMENT OF TRANSPORTATION

MIDPOINT BRIDGE
REINFORCING BAR LIST (5)

65

PIER NO. 33

MARK SIZE	MARK DES	LENGTH FT IN	NO BARS	TYP BAR	STY A	STY G	B FT IN FR	C FT IN FR	D FT IN FR	E FT IN FR	F FT IN FR	H FT IN FR	J FT IN	K FT IN	N	O
10	P1	41 - 0	64	18	3	3	37 - 4									
10	P2	VARIES	2	18	3	3	VARIES									
		33 - 1	SETS				29 - 11									
		TO	OF				TO									
		40 - 4	8				36 - 1 - ¼									
10	P3	VARIES	2	18	3	3	VARIES									
		25 - 4	SETS				21 - 8									
		TO	OF				TO									
		28 - 3	4				24 - 6 - ½									
10	P4	VARIES	2	18	3	3	VARIES									
		51 - 10	SETS				48 - 1 - ¾									
		TO	OF				TO									
		57 - 0	3				53 - 3 - ¾									
10	P5A	VARIES	2	17	3		VARIES									
		40 - 10	SETS				39 - 0									
		TO	OF				TO									
		44 - 2	6				42 - 4									
10	P5B	VARIES	2	17	3		VARIES									
		28 - 10	SETS				27 - 0									
		TO	OF				TO									
		32 - 2	6				30 - 4									
10	P6A	44 - 6	23	17	3		42 - 8									
10	P6B	32 - 6	23	17	3		30 - 8									
6	P7A	VARIES	2	1			VARIES									
		36 - 11	SETS				36 - 11									
		TO	OF				TO									
		45 - 3	12				45 - 3									
6	P7B	VARIES	2	1			VARIES									
		15 - 11	SETS				15 - 11									
		TO	OF				TO									
		24 - 3	12				24 - 3									
6	P8A	45 - 8	34	1			45 - 8									
6	P8B	24 - 8	34	1			24 - 8									
6	P9	VARIES	2	18	3	3	VARIES									
		25 - 4	SETS				21 - 8									
		TO	OF				TO									
		40 - 3	10				36 - 1									
6	P10	39 - 4	48	18	3	3	37 - 4									
10	P11A	VARIES	2	17			VARIES									
		41 - 4	SETS				39 - 6									
		TO	OF				TO									
		50 - 5	13				48 - 7									
10	P11B	VARIES	2	17			VARIES									
		19 - 0	SETS				17 - 2									
		TO	OF				TO									
		28 - 1	13				26 - 3									
10	P12A	50 - 10	34	17			49 - 0									
10	P12B	28 - 6	34	17			26 - 8									
6	P13A	21 - 2	16	1			21 - 2									
6	P13B	47 - 9	16	1			47 - 9									
6	P13C	18 - 9	32	13			12 - 6 ¼	3 - 1	3 - 1						51#	40#
6	P14	VARIES	2	1			VARIES									
		23 - 4	SETS				23 - 3 - ¾									
		TO	OF				TO									
		36 - 7	9				36 - 7									
6	P15	37 - 4	48	1			37 - 4									
4	P16	6 - 4	120	1			6 - 4									
4	P17	6 - 4	136	1			6 - 4									
11	P21	17 - 7	68	17	3		15 - 7									
4	P24	18 - 6	16	4	4	4	4 - 0	4 - 10 - ¼								
7	P25	81 - 6	6	41			44 - 9	36 - 9					4 - 0		1	
7	P26	74 - 10	2	41			41 - 5	33 - 5					4 - 0		1	
7	P27	69 - 0	2	41			38 - 6	30 - 6					4 - 0		1	
7	P28	63 - 2	2	41			35 - 7	27 - 7					4 - 0		1	

PIER NO. 33 CONT.

MARK SIZE	MARK DES	LENGTH FT IN	NO BARS	TYP BAR	STY A	STY G	B FT IN FR	C FT IN FR	D FT IN FR	E FT IN FR	F FT IN FR	H FT IN FR	J FT IN	K FT IN	N	O
11	P29	28 - 9	30	1			28 - 9									
11	P30	81 - 0	15	41			44 - 3	36 - 9					3 - 6		1	
11	P31	46 - 0	22	1			46 - 0									
4	P32	18 - 1	22	12			13 - 4	4 - 9								16
5	P33	VARIES	6	4	4	4	VARIES	2 - 8 ½								
		11 - 1	SETS				2 - 1									
		TO	OF				TO									
		18 - 10	31				6 - 2 - ¼									
5	P34	18 - 11	144	4	4	4	6 - 3	2 - 8 ½								
4	P35	5 - 8	38	18	1	3	4 - 6									
4	P40	2 - 5	384	18	1	3	1 - 3									
4	P47A	2 - 0	80	1			2 - 0									
4	P48	6 - 8	96	11			2 - 0	2 - 4	2 - 4							
8	P50	4 - 10	80	17	1		3 - 9									

NOTE:
FOR STANDARD BAR BENDING DETAILS, SEE SHEET A-6. REINFORCING STEEL SHALL BE ASTM. A615, GRADE 60.

HDR 16 MAY 96

FINLEY McNARY/JANSSEN SPAANS
a Joint Venture

Finley McNary Engineers, Inc
1391 Timberlane Road Suite 200
Tallahassee, Florida 32312-1721

Janssen & Spaans Engineers, Inc.
2825 East 56th Street
Indianapolis, Indiana 46220

REVISIONS

DATE	BY	DESCRIPTION	DATE	BY	DESCRIPTION	DATE	BY	DESCRIPTION	DATE	BY

	NAME	DATE
DR. BY	J.L.S.	1/96
CHK. BY	C.W.N.	1/96
SUPV.	H.D.R.	1/96

FINLEY McNARY/JANSSEN SPAANS

BOARD OF COUNTY COMMISSIONERS
LEE, COUNTY, FLORIDA
DEPARTMENT OF TRANSPORTATION

MIDPOINT BRIDGE
REINFORCING BAR LIST (6)

PIER NO. 34

MARK SIZE	MARK DES	LENGTH FT IN	NO BARS	TYP BAR	STY A	STY G	B FT IN FR	C FT IN FR	D FT IN FR	E FT IN FR	F FT IN FR	H FT IN FR	J FT IN	K FT IN	N	O
10	P1	41 - 0	64	18	3	3	37 - 4									
10	P2	VARIES 33 - 7 TO 40 - 4	2 SETS OF 8	18	3	3	VARIES 29 - 11 TO 36 - 7 - ¼									
10	P3	VARIES 25 - 4 TO 28 - 3	2 SETS OF 4	18	3	3	VARIES 21 - 8 TO 24 - 6 - ½									
10	P4	VARIES 51 - 10 TO 57 - 0	2 SETS OF 5	18	3	3	VARIES 48 - 1 - ¼ TO 53 - 3 - ¼									
10	P5A	VARIES 40 - 10 TO 44 - 2	2 SETS OF 6	17	3		VARIES 39 - 0 TO 42 - 4									
10	P5B	VARIES 28 - 10 TO 32 - 2	2 SETS OF 6	17	3		VARIES 27 - 0 TO 30 - 4									
10	P6A	44 - 6	23	17	3		42 - 8									
10	P6B	32 - 6	23	17	3		30 - 8									
6	P7A	VARIES 36 - 11 TO 45 - 3	2 SETS OF 12	1			VARIES 36 - 11 TO 45 - 3									
6	P7B	VARIES 15 - 11 TO 24 - 3	2 SETS OF 12	1			VARIES 15 - 11 TO 24 - 3									
6	P8A	45 - 8	34	1			45 - 8									
6	P8B	24 - 8	34	1			24 - 8									
6	P9	VARIES 25 - 4 TO 40 - 3	2 SETS OF 10	18	3	3	VARIES 21 - 8 TO 36 - 7									
6	P10	39 - 4	48	18	3	3	37 - 4									
10	P11A	VARIES 41 - 4 TO 50 - 5	2 SETS OF 13	17			VARIES 39 - 6 TO 48 - 7									
10	P11B	VARIES 19 - 0 TO 28 - 1	2 SETS OF 13	17			VARIES 17 - 2 TO 26 - 3									
10	P12A	50 - 10	34	17			49 - 0									
10	P12B	28 - 6	34	17			26 - 8									
6	P13A	21 - 2	16	1			21 - 2									
6	P13B	47 - 9	16	1			47 - 9									
6	P13C	18 - 9	32	13			12 - 6 ¼	3 - 1	3 - 1						51N	40N
6	P14	VARIES 23 - 4 TO 36 - 7	2 SETS OF 9	1			VARIES 23 - 3 - ¾ TO 36 - 7									
6	P15	37 - 4	48	1			37 - 4									
4	P16	6 - 4	120	1			6 - 4									
4	P17	6 - 4	136	1			6 - 4									
11	P21A	13 - 11	34	17	3		11 - 11									
11	P21B	11 - 11	34	17	3		9 - 11									
11	P22A	- 6 1/2	34	1	-		9 - 6½									
11	P22B	- 6 1/2	34	1	-		7 - 6½									
4	P24	18 - 6	32	4	4	4	4 - 0	4 - 10 - ¼								
7	P25	81 - 6	6	41			44 - 9	36 - 9					4 - 0		1	
7	P26	74 - 10	2	41			41 - 5	33 - 5					4 - 0		1	
7	P27	69 - 0	2	41			38 - 6	30 - 6					4 - 0		1	
7	P28	63 - 2	2	41			35 - 7	27 - 7					4 - 0		1	
11	P29	28 = 9	30	1			28 - 9									

PIER NO. 34 CONT.

MARK SIZE	MARK DES	LENGTH FT IN	NO BARS	TYP BAR	STY A	STY G	B FT IN FR	C FT IN FR	D FT IN FR	E FT IN FR	F FT IN FR	H FT IN FR	J FT IN	K FT IN	N	O
11	P30	81 - 0	15	41			44 - 3	36 - 9					3 - 6		1	
11	P31	46 - 0	22	1			46 - 0									
4	P32	18 - 1	22	12			13 - 4	4 - 9								16
5	P33	VARIES 11 - 7 TO 18 - 10	6 SETS OF 31	4	4	4	VARIES 2 - 7 TO 6 - 2 - ¼	2 - 8 ½								
5	P34	18 - 11	144	4	4	4	6 - 3	2 - 8 ½								
4	P35	5 - 8	38	18	1	3	4 - 6									
4	P47A	2 - 0	80	1			2 - 0									
4	P48	6 - 8	56	11			2 - 0	2 - 4	2 - 4							
8	P50	4 - 10	80	17			3 - 9									

NOTE:
FOR STANDARD BAR BENDING DETAILS, SEE SHEET A-6. REINFORCING STEEL SHALL BE ASTM, A615, GRADE 60.

16 MAY 96

FINLEY McNARY/JANSSEN SPAANS
o Joint Venture

Finley McNary Engineers, Inc
1391 Timberlane Road Suite 200
Tallahassee, Florida 32312-1721

Janssen & Spaans Engineers, Inc.
2825 East 56th Street
Indianapolis, Indiana 46220

REVISIONS

DATE	BY	DESCRIPTION	DATE	BY	DESCRIPTION	DATE	BY	DESCRIPTION	DATE	BY

	NAME	DATE
DR. BY	J.L.S.	1/96
CHK. BY	C.W.N.	1/96
SUPV.	H.D.R.	1/96

FINLEY McNARY/JANSSEN SPAANS

BOARD OF COUNTY COMMISSIONERS
LEE, COUNTY, FLORIDA
DEPARTMENT OF TRANSPORTATION

MIDPOINT BRIDGE
REINFORCING BAR LIST (7)

5896	C-123A

BX1-135

PIER NO. 35

MARK SIZE	MARK DES	LENGTH FT-IN	NO BARS	TYP BAR	STY A	STY G	B FT-IN-FR	C FT-IN-FR	D FT-IN-FR	E FT-IN-FR	F FT-IN-FR	H FT-IN-FR	J FT-IN-FR	K FT-IN	#	@
10	P1	41 - 0	64	18	3	3	37 - 4									
10	P2	VARIES	2	18	3	3	VARIES									
		33 - 7	SETS				29 - 11									
		TO	OF				TO									
		40 - 4	8				36 - 7 - ¼									
10	P3	VARIES	2	18	3	3	VARIES									
		25 - 4	SETS				21 - 8									
		TO	OF				TO									
		28 - 3	4				24 - 6 - ½									
10	P4	VARIES	2	18	3	3	VARIES									
		51 - 10	SETS				48 - 1 - ¼									
		TO	OF				TO									
		54 - 0	5				53 - 3 - ¼									
10	P5A	VARIES	2	17	3		VARIES									
		40 - 10	SETS				39 - 0									
		TO	OF				TO									
		44 - 2	6				42 - 4									
10	P5B	VARIES	2	17	3		VARIES									
		28 - 10	SETS				27 - 0									
		TO	OF				TO									
		32 - 2	6				30 - 4									
10	P6A	44 - 6	23	17	3		42 - 8									
10	P6B	32 - 6	23	17	3		30 - 8									
6	P7A	VARIES	2	1			VARIES									
		36 - 11	SETS				36 - 11									
		TO	OF				TO									
		45 - 3	12				45 - 3									
6	P7B	VARIES	2	1			VARIES									
		15 - 11	SETS				15 - 11									
		TO	OF				TO									
		24 - 3	12				24 - 3									
6	P8A	45 - 8	34	1			45 - 8									
6	P8B	24 - 8	34	1			24 - 8									
6	P9	VARIES	2	18	3	3	VARIES									
		25 - 4	SETS				21 - 8									
		TO	OF				TO									
		40 - 3	10				36 - 7									
6	P10	39 - 4	48	18	3	3	37 - 4									
10	P11A	VARIES	2	17			VARIES									
		41 - 4	SETS				39 - 6									
		TO	OF				TO									
		50 - 5	13				48 - 7									
10	P11B	VARIES	2	17			VARIES									
		19 - 0	SETS				17 - 2									
		TO	OF				TO									
		28 - 1	13				26 - 3									
10	P12A	50 - 10	34	17			49 - 0									
10	P12B	28 - 6	34	17			26 - 8									
6	P13A	21 - 2	16	1			21 - 2									
6	P13B	47 - 9	16	1			47 - 9									
6	P13C	18 - 9	32	13			12 - 6 - ¼	3 - 1	3 - 1						51N	40N
6	P14	VARIES	2	1			VARIES									
		23 - 4	SETS				23 - 3 - ¾									
		TO	OF				TO									
		36 - 7	9				36 - 7									
6	P15	37 - 4	48	1			37 - 4									
4	P16	6 - 4	120	1			6 - 4									
4	P17	6 - 4	136	1			6 - 4									
11	P21A	13 - 11	34	17	3		11 - 11									
11	P21B	11 - 11	34	17	3		9 - 11									
11	P22A	14 - 0	34	1			14 - 0									
11	P22B	12 - 0	34	1			12 - 0									
4	P24	18 - 6	48	4	4	4	4 - 0	4 - 10 - ¼					4 - 0		1	
7	P25	81 - 6	6	41			44 - 9	36 - 9					4 - 0		1	
7	P26	74 - 10	2	41			41 - 5	33 - 5					4 - 0		1	
7	P27	69 - 0	2	41			38 - 6	30 - 6					4 - 0		1	
7	P28	63 - 2	2	41			35 - 7	27 - 7					4 - 0		1	
11	P29	28 - 9	30	1			28 - 9	36 - 9								
11	P30	81 - 0	15	41			44 - 3	36 - 9					3 - 6		1	
11	P31	46 - 0	22	1			46 - 0									
4	P32	18 - 1	22	12			13 - 4	4 - 9								16
5	P33	VARIES	6	4	4	4	VARIES	2 - 8 ½								
		11 - 7	SETS				2 - 7									
		TO	OF				TO									
		18 - 10	31				6 - 2 ¼									
5	P34	18 - 11	144	4	4	4	6 - 3	2 - 8 ½								
4	P35	5 - 8	38	18	1	3	4 - 6									
6	P01	5 - 11	64	23			2 - 7	0 - 2 - ¼	2 - 7							

PIER NO. 35 CONT.

MARK SIZE	MARK DES	LENGTH FT-IN	NO BARS	TYP BAR	STY A	STY G	B FT-IN-FR	C FT-IN-FR	D FT-IN-FR	E FT-IN-FR	F FT-IN-FR	H FT-IN-FR	J FT-IN-FR	K FT-IN	#	@
4	P01	1 - 8	96	1			1 - 8									
4	P41A	2 - 0	80	1			2 - 0									
4	P48	6 - 8	96	11			2 - 0	2 - 4	2 - 4							
8	P50	4 - 10	80	17		1	3 - 9									

NOTE:
FOR STANDARD BAR BENDING DETAILS, SEE SHEET A-6. REINFORCING STEEL SHALL BE ASTM. A615, GRADE 60.

HDR
10 May 96

FINLEY McNARY/JANSSEN SPAANS
a Joint Venture

Finley McNary Engineers, inc
1391 Timberlane Road Suite 200
Tallahassee, Florida 32312-1721

Janssen & Spaans Engineers, Inc.
2825 East 56th Street
Indianapolis, Indiana 46220

REVISIONS

DATE	BY	DESCRIPTION	DATE	BY	DESCRIPTION	DATE	BY	DESCRIPTION	DATE	BY

	NAME	DATE
DR. BY	J.L.S.	1/96
CHK. BY	C.W.N.	1/96
SUPV.	H.D.R.	1/96

FINLEY McNARY/JANSSEN SPAANS

BOARD OF COUNTY COMMISSIONERS
LEE, COUNTY, FLORIDA
DEPARTMENT OF TRANSPORTATION

MIDPOINT BRIDGE
REINFORCING BAR LIST (8)

5896	C-124A

BX1-136

PIER NO. 36

MARK SIZE	MARK DES	LENGTH FT IN	NO BARS	TYP BAR	STY A	STY C	B FT IN FR	C FT IN FR	D FT IN FR	E FT IN FR	F FT IN FR	H FT IN FR	J FT IN	K FT IN	W	G
10	P1	41 - 0	64	18	3	3	37 - 4									
10	P2	VARIES	2	18	3	3	VARIES									
		33 - 7	SETS				29 - 11									
		TO	OF				TO									
		40 - 4	8				36 - 7 - ¼									
10	P3	VARIES	2	18	3	3	VARIES									
		25 - 4	SETS				21 - 8									
		TO	OF				TO									
		28 - 3	4				24 - 6 - ½									
10	P4	VARIES	2	18	3	3	VARIES									
		51 - 10	SETS				48 - 1 ¼									
		TO	OF				TO									
		57 - 0	5				53 - 3 - ¼									
10	P5A	VARIES	2	17	3		VARIES									
		40 - 10	SETS				39 - 0									
		TO	OF				TO									
		44 - 2	6				42 - 4									
10	P5B	VARIES	2	17	3		VARIES									
		28 - 10	SETS				27 - 0									
		TO	OF				TO									
		32 - 2	6				30 - 4									
10	P6A	44 - 6	23	17	3		42 - 8									
10	P6B	32 - 6	23	17	3		30 - 8									
6	P7A	VARIES	2	1			VARIES									
		36 - 11	SETS				36 - 11									
		TO	OF				TO									
		45 - 3	12				45 - 3									
6	P7B	VARIES	2	1			VARIES									
		15 - 11	SETS				15 - 11									
		TO	OF				TO									
		24 - 3	12				24 - 3									
6	P8A	45 - 8	34	1			45 - 8									
6	P8B	24 - 8	34	1			24 - 8									
6	P9	VARIES	2	18	3	3	VARIES									
		25 - 4	SETS				21 - 8									
		TO	OF				TO									
		40 - 3	10				36 - 7									
6	P10	39 - 4	48	18	3	3	37 - 4									
10	P11A	VARIES	2	17	3		VARIES									
		41 - 4	SETS				39 - 6									
		TO	OF				TO									
		50 - 5	13				48 - 7									
10	P11B	VARIES	2	17	3		VARIES									
		19 - 0	SETS				17 - 2									
		TO	OF				TO									
		28 - 1	13				26 - 3									
10	P12A	50 - 10	34	17			49 - 0									
10	P12B	28 - 6	34	17			26 - 8									
6	P13A	21 - 2	16	1			21 - 2									
6	P13B	47 - 9	16	1			47 - 9									
6	P13C	18 - 9	32	13			12 - 6 - ¼	3 - 1	3 - 1						51K	40W
6	P14	VARIES	2	1			VARIES									
		23 - 4	SETS				23 - 3 - ¾									
		TO	OF				TO									
		36 - 7	9				36 - 7									
6	P15	37 - 4	48	1			37 - 4									
4	P16	6 - 4	120	1			6 - 4									
4	P17	6 - 4	136	1			6 - 4									
11	P21A	13 - 11	34	17	3		11 - 11									
11	P21B	11 - 11	34	17	3		9 - 11									
11	P22A	18 - 6	34	1			18 - 6									
11	P22B	16 - 6	34	1			16 - 6									
4	P24	18 - 6	68	4	4	4	4 - 0	4 - 10 - ½								
7	P25	81 - 6	6	41			44 - 9	36 - 9					4 - 0		1	
7	P26	74 - 10	2	41			41 - 5	33 - 5					4 - 0		1	
7	P27	69 - 0	2	41			38 - 6	30 - 6					4 - 0		1	
7	P28	63 - 2	2	41			35 - 7	27 - 7					4 - 0		1	
11	P29	28 - 9	30	1			28 - 9									
11	P30	81 - 0	15	41			44 - 3	36 - 9					3 - 6		1	
11	P31	46 - 0	22	1			46 - 0									
4	P32	18 - 1	22	12			13 - 4	4 - 9								16
5	P33	VARIES	6	4	4	4	VARIES	2 - 8 - ½								
		11 - 7	SETS				2 - 7									
		TO	OF				TO									
		18 - 10	31				6 - 2 - ¼									
5	P34	18 - 11	144	4	4	4	6 - 3	2 - 8 - ½								
4	P35	5 - 8	38	18	1	3	4 - 6									
4	P40	2 - 5	384	18	1	3	1 - 3									

PIER NO. 36 CONT.

MARK SIZE	MARK DES	LENGTH FT IN	NO BARS	TYP BAR	STY A	STY G	B FT IN FR	C FT IN FR	D FT IN FR	E FT IN FR	F FT IN FR	H FT IN FR	J FT IN	K FT IN	W	G
4	P47A	2 - 0	80	1			2 - 0									
4	P48	6 - 8	96	11			2 - 0	2 - 4	2 - 4							
8	P50	4 - 10	80	17	1		3 - 9									

NOTE:
FOR STANDARD BAR BENDING DETAILS, SEE SHEET A-6. REINFORCING STEEL SHALL BE ASTM, A615, GRADE 60.

H.D.R. 6 MAY 96

FINLEY McNARY/JANSSEN SPAANS
a Joint Venture

Finley McNary Engineers, Inc
1391 Timberlane Road Suite 200
Tallahassee, Florida 32312-1721

Janssen & Spaans Engineers, Inc.
2825 East 56th Street
Indianapolis, Indiana 46220

REVISIONS

DATE	BY	DESCRIPTION	DATE	BY	DESCRIPTION	DATE	BY	DESCRIPTION	DATE	BY

	NAME	DATE
DR. BY	J.L.S.	1/96
CHK. BY	C.W.N.	1/96
SUPV.	H.D.R.	1/96

FINLEY McNARY/JANSSEN SPAANS

BOARD OF COUNTY COMMISSIONERS
LEE, COUNTY, FLORIDA
DEPARTMENT OF TRANSPORTATION

MIDPOINT BRIDGE
REINFORCING BAR LIST (9)

PIER NO. 37

MARK SIZE	MARK DES	LENGTH FT IN	NO BARS	TYP BAR	STY A	STY G	B FT IN FR	C FT IN FR	D FT IN FR	E FT IN FR	F FT IN FR	H FT IN FR	J FT IN	K FT IN	N	O
10	P1	41 - 0	66	18	3	3	37 - 4									
10	P2	VARIES	2	18	3	3	VARIES									
		33 - 4	SETS				29 - 8									
		TO	OF				TO									
		40 - 6	9				36 - 9 - 1/4									
10	P3	VARIES	2	18	3	3	VARIES									
		25 - 4	SETS				21 - 8									
		TO	OF				TO									
		28 - 8	5				24 - 11 - 1/2									
10	P4	VARIES	2	18	3	3	VARIES									
		51 - 11	SETS				48 - 2 - 3/4									
		TO	OF				TO									
		56 - 9	4				53 - 1									
10	P5	VARIES	4	17	3		VARIES									
		14 - 11	SETS				33 - 1									
		TO	OF				TO									
		38 - 0	5				36 - 2									
10	P6	38 - 10	40	17	3		37 - 0									
6	P7A	VARIES	2	1			VARIES									
		31 - 4	SETS				31 - 4									
		TO	OF				TO									
		39 - 9	14				39 - 9									
6	P7B	VARIES	2	1			VARIES									
		21 - 4	SETS				21 - 4									
		TO	OF				TO									
		29 - 9	14				29 - 9									
6	P8A	40 - 2	40	1			40 - 2									
6	P8B	30 - 2	40	1			30 - 2									
6	P9	VARIES	2	18	3	3	VARIES									
		23 - 8	SETS				21 - 8									
		TO	OF				TO									
		38 - 5	13				36 - 4 - 3/16									
6	P10	39 - 4	64	18	3	3	37 - 4									
10	P11A	VARIES	2	17	3		VARIES									
		40 - 6	SETS				39 - 6									
		TO	OF				TO									
		49 - 7	15				48 - 7									
10	P11B	VARIES	2	17	3		VARIES									
		18 - 2	SETS				17 - 2									
		TO	OF				TO									
		27 - 3	15				26 - 3									
10	P12A	50 - 10	40	17	3		49 - 0									
10	P12B	28 - 6	40	17	3		26 - 8									
6	P13A	21 - 2	16	1			21 - 2									
6	P13B	47 - 9	16	1			47 - 9									
6	P13C	18 - 9	32	13			12 - 6 - 1/4	3 - 1	3 - 1						51N	40X
6	P14	VARIES	2	1			VARIES									
		22 - 11	SETS				22 - 10 - 3/4									
		TO	OF				TO									
		36 - 6	12				36 - 6									
6	P15	37 - 4	64	1			37 - 4									
4	P16	6 - 4	140	1			6 - 4									
4	P17	6 - 4	180	1			6 - 4									
11	P21A	13 - 11	34	17	3		11 - 11									
11	P21B	11 - 11	34	17	3		9 - 11									
11	P22A	22 - 8	34	1			22 - 8									
11	P22B	20 - 8	34	1			20 - 8									
4	P24	18 - 6	84	84	4	4	4 - 0	4 - 10 - 1/4								
7	P25	81 - 6	6	41			44 - 9	36 - 9					4 - 0		1	
7	P26	74 - 10	2	41			41 - 5	33 - 5					4 - 0		1	
7	P27	69 - 0	2	41			38 - 6	30 - 6					4 - 0		1	
7	P28	63 - 2	2	41			35 - 7	27 - 7					4 - 0		1	
11	P29	28 - 9	30	1			28 - 9									

PIER NO. 37

MARK SIZE	MARK DES	LENGTH FT IN	NO BARS	TYP BAR	STY A	STY G	B FT IN FR	C FT IN FR	D FT IN FR	E FT IN FR	F FT IN FR	H FT IN FR	J FT IN	K FT IN	N	O
11	P30	81 - 0	15	41			44 - 3	36 - 9					3 - 6		1	
11	P31	46 - 0	22	1			46 - 0									
4	P32	18 - 1	22	12			13 - 4	4 - 9								16
5	P33	VARIES	6	4	4	4	VARIES	2 - 8 - 1/2								
		11 - 7	SETS				2 - 7									
		TO	OF				TO									
		18 - 10	31				6 - 2 - 1/4									
5	P34	18 - 11	144	4	4	4	6 - 3	2 - 8 - 1/2								
4	P35	5 - 8	38	18	1	3	4 - 6									
4	P47A	2 - 0	80	1			2 - 0									
4	P48	6 - 8	96	11			2 - 0	2 - 4	2 - 4							
8	P50	4 - 10	192	17	1		3 - 9									

NOTE:
FOR STANDARD BAR BENDING DETAILS, SEE SHEET A-6. REINFORCING STEEL SHALL BE ASTM, A615, GRADE 60.

HDR 6 MAY 96

FINLEY McNARY/JANSSEN SPAANS
a Joint Venture

Finley McNary Engineers, inc
1391 Timberlane Road Suite 200
Tallahassee, Florida 32312-1721

Janssen & Spaans Engineers, Inc.
2825 East 56th Street
Indianapolis, Indiana 46220

REVISIONS

DATE	BY	DESCRIPTION	DATE	BY	DESCRIPTION	DATE	BY	DESCRIPTION	DATE	BY

	NAME	DATE
DR. BY	J.L.S.	1/96
CHK. BY	C.W.N.	1/96
SUPV.	H.D.R.	1/96

FINLEY McNARY/JANSSEN SPAANS

BOARD OF COUNTY COMMISSIONERS
LEE, COUNTY, FLORIDA
DEPARTMENT OF TRANSPORTATION

MIDPOINT BRIDGE
REINFORCING BAR LIST (10)

76

PIER NO. 38

MARK SIZE	MARK DES	LENGTH FT IN	NO BARS	TYP BAR	STY A	STY G	B FT IN FR	C FT IN FR	D FT IN FR	E FT IN FR	F FT IN FR	H FT IN FR	J FT IN	K FT IN	N	O
10	P1	41 - 0	66	18	3	3	37 - 4									
10	P2	VARIES	2	18	3	3	VARIES									
		33 - 4	SETS				29 - 8									
		TO	OF				TO									
		40 - 6	9				36 - 9 - 3/8									
10	P3	VARIES	2	18	3	3	VARIES									
		25 - 4	SETS				21 - 8									
		TO	OF				TO									
		28 - 8	5				24 - 11 - 1/2"									
10	P4	VARIES	2	18	3	3	VARIES									
		51 - 11	SETS				48 - 2 - 3/8"									
		TO	OF				TO									
		56 - 9	4				53 - 1									
10	P5	VARIES	4	17	3		VARIES									
		34 - 11	SETS				33 - 1									
		TO	OF				TO									
		38 - 0	5				36 - 7									
10	P6	38 - 10	40	17	3		37 - 0									
6	P7A	VARIES	2	1			VARIES									
		31 - 4	SETS				31 - 4									
		TO	OF				TO									
		39 - 9	14				39 - 9									
6	P7B	VARIES	2	1			VARIES									
		21 - 4	SETS				21 - 4									
		TO	OF				TO									
		29 - 9	14				29 - 9									
6	P8A	40 - 2	40	1			40 - 2									
6	P8B	30 - 2	40	1			30 - 2									
6	P9	VARIES	2	18	3	3	VARIES									
		23 - 8	SETS				21 - 8									
		TO	OF				TO									
		38 - 5	13				36 - 4 - 3/16									
6	P10	39 - 4	64	18	3	3	37 - 4									
10	P11A	VARIES	2	17			VARIES									
		40 - 6	SETS				39 - 6									
		TO	OF				TO									
		49 - 7	15				48 - 7									
10	P11B	VARIES	2	17	3		VARIES									
		18 - 2	SETS				17 - 2									
		TO	OF				TO									
		27 - 3	15				26 - 3									
10	P12A	50 - 10	40	17			49 - 0									
10	P12B	28 - 6	40	17			26 - 8									
6	P13A	21 - 2	16	1			21 - 2									
6	P13B	47 - 9	16	1			47 - 9									
6	P13C	18 - 9	32	13			12 - 6 - 1/4	3 - 1	3 - 1						51X	40X
6	P14	VARIES	2	1			VARIES									
		22 - 11	SETS				22 - 10 - 3/4"									
		TO	OF				TO									
		36 - 6	12				36 - 6									
6	P15	37 - 4	64	1			37 - 4									
4	P16	6 - 4	140	1			6 - 4									
4	P17	6 - 4	180	1			6 - 4									
11	P21A	13 - 11	34	17	3		11 - 11									
11	P21B	11 - 11	34	17	3		9 - 11									
11	P22A	27 - 0	34	1			27 - 0									
11	P22B	25 - 0	34	1			25 - 0									
4	P24	18 - 6	100	4	4	4	4 - 0	4 - 10 - 1/4								
7	P25	81 - 6	6	41			44 - 9	36 - 9					4 - 0		1	
7	P26	74 - 10	2	41			41 - 5	33 - 5					4 - 0		1	
7	P27	69 - 0	2	41			38 - 6	30 - 6					4 - 0		1	
7	P28	63 - 2	2	41			35 - 7	27 - 7					4 - 0		1	
11	P29	28 - 9	30	1			28 - 9									

PIER NO. 38 CONT.

MARK SIZE	MARK DES	LENGTH FT IN	NO BARS	TYP BAR	STY A	STY G	B FT IN FR	C FT IN FR	D FT IN FR	E FT IN FR	F FT IN FR	H FT IN FR	J FT IN	K FT IN	N	O
11	P30	81 - 0	15	41			44 - 3	36 - 9					3 - 6		1	
11	P31	46 - 0	22	1			46 - 0									
4	P32	18 - 1	22	12			13 - 4	4 - 9								16
5	P33	VARIES	6	4	4	4	VARIES	2 - 8 - 1/2								
		11 - 7	SETS				2 - 7									
		TO	OF				TO									
		18 - 10	31				6 - 2 - 1/4									
5	P34	18 - 11	144	4	4	4	6 - 3	2 - 8 - 1/2								
4	P35	5 - 8	18	18	1	3	4 - 6									
6	P01	5 - 11	64	23			2 - 7	0 - 2 - 1/4	2 - 7							
4	P01	1 - 8	96	1			1 - 8									
4	P47A	2 - 0	80	1			2 - 0									
4	P48	6 - 6	96	11			2 - 0	2 - 3	2 - 3							
8	P50	4 - 10	192	17	1		3 - 9									

NOTE:
FOR STANDARD BAR BENDING DETAILS, SEE SHEET A-6. REINFORCING STEEL SHALL BE ASTM. A615, GRADE 60.

6 MAY 96

FINLEY McNARY/JANSSEN SPAANS
a Joint Venture

Finley McNary Engineers, Inc
1391 Timberlane Road Suite 200
Tallahassee, Florida 32312-1721

Janssen & Spaans Engineers, Inc.
2825 East 56th Street
Indianapolis, Indiana 46220

REVISIONS

DATE	BY	DESCRIPTION	DATE	BY	DESCRIPTION	DATE	BY	DESCRIPTION	DATE	BY

	NAME	DATE
DR. BY	J.L.S.	1/96
CHK. BY	C.W.N.	1/96
SUPV.	H.D.R.	1/96

FINLEY McNARY/JANSSEN SPAANS

BOARD OF COUNTY COMMISSIONERS
LEE, COUNTY, FLORIDA
DEPARTMENT OF TRANSPORTATION

MIDPOINT BRIDGE
REINFORCING BAR LIST (11)

PIER NO. 39

MARK SIZE	MARK DES	LENGTH FT IN	NO BARS	TYP BAR	STY A	STY G	B FT IN FR	C FT IN FR	D FT IN FR	E FT IN FR	F FT IN FR	H FT IN FR	J FT IN	K FT IN	N	O
10	P1	41 - 0	66	18	3	3	37 - 4									
10	P2	VARIES	2	18	3	3	VARIES									
		33 - 4	SETS				29 - 8									
		TO	OF				TO									
		40 - 6	9				36 - 9 ¼									
10	P3	VARIES	2	18	3	3	VARIES									
		25 - 4	SETS				21 - 8									
		TO	OF				TO									
		28 - 8	5				24 - 11 - ½"									
10	P4	VARIES	2	18	3	3	VARIES									
		51 - 11	SETS				48 - 2 - ¼"									
		TO	OF				TO									
		56 - 9	4				53 - 1									
10	P5	VARIES	4	17	3		VARIES									
		34 - 11	SETS				33 - 1									
		TO	OF				TO									
		38 - 0	5				36 - 2									
10	P6	38 - 10	40	17	3		37 - 0									
6	P7A	VARIES	2	1			VARIES									
		31 - 4	SETS				31 - 4									
		TO	OF				TO									
		39 - 9	14				39 - 9									
6	P7B	VARIES	2	1			VARIES									
		21 - 4	SETS				21 - 4									
		TO	OF				TO									
		29 - 9	14				29 - 9									
6	P8A	40 - 2	40	1			40 - 2									
6	P8B	30 - 2	40	1			30 - 2									
6	P9	VARIES	2	18	3	3	VARIES									
		23 - 8	SETS				21 - 8									
		TO	OF				TO									
		38 - 5	13				36 - 4 - 5/16									
6	P10	39 - 4	64	18	3	3	37 - 4									
10	P11A	VARIES	2	17			VARIES									
		40 - 6	SETS				39 - 6									
		TO	OF				TO									
		49 - 7	15				48 - 7									
10	P11B	VARIES	2	17	3		VARIES									
		18 - 2	SETS				17 - 2									
		TO	OF				TO									
		27 - 3	15				26 - 3									
10	P12A	50 - 10	40	17			49 - 0									
10	P12B	28 - 6	40	17			26 - 8									
6	P13A	21 - 2	16	1			21 - 2									
6	P13B	41 - 9	16	1			41 - 9									
6	P13C	18 - 9	32	13			12 - 6 - ¼	3 - 1	3 - 1						51N	40W
6	P14	VARIES	2	1			VARIES									
		22 - 11	SETS				22 - 10 - ¾									
		TO	OF				TO									
		36 - 6	12				36 - 6									
6	P15	37 - 4	64	1			37 - 4									
4	P16	6 - 4	140	1			6 - 4									
4	P17	6 - 4	180	1			6 - 4									
11	P21A	13 - 11	34	17	3		11 - 11									
11	P21B	11 - 11	34	17	3		9 - 11									
11	P22A	31 - 4	34	1			31 - 4									
11	P22B	29 - 4	34	1			29 - 4									
4	P24	18 - 6	120	4	4	4	4 - 0	4 - 10 - ¼								
7	P25	81 - 6	6	41			44 - 9	36 - 9					4 - 0		1	
7	P26	74 - 10	2	41			41 - 5	33 - 5					4 - 0		1	
7	P27	69 - 0	2	41			38 - 6	30 - 6					4 - 0		1	
7	P28	63 - 2	2	41			35 - 7	27 - 7					4 - 0		1	
11	P29	28 - 9	30	1			28 - 9									
11	P30	81 - 0	15	41			44 - 3	36 - 9					3 - 6		1	
11	P31	46 - 0	22	1			46 - 0									
4	P32	18 - 1	22	12			13 - 4	4 - 9								16
5	P33	VARIES	6	4	4	4	VARIES	2 - 8 - ½								
		11 - 7	SETS				2 - 7									
		TO	OF				TO									
		18 - 10	31				6 - 2 - ¼									
5	P34	18 - 11	144	4	4	4	6 - 3	2 - 8 - ½								
4	P35	5 - 8	38	18	1	3	4 - 6									

PIER NO. 39 (CONT.)

MARK SIZE	MARK DES	LENGTH FT IN	NO BARS	TYP BAR	STY A	STY G	B FT IN FR	C FT IN FR	D FT IN FR	E FT IN FR	F FT IN FR	H FT IN FR	J FT IN	K FT IN	N	O
4	P40	2 - 3	192	18	1	3	1 - 0 - ¼									
4	P41A	2 - 0	80	1			2 - 0									
4	P41B	6 - 4	96	11			2 - 0	2 - 2	2 - 2							
8	P50	4 - 10	192	17	1		3 - 9									

NOTE:
FOR STANDARD BAR BENDING DETAILS, SEE SHEET A-6. REINFORCING STEEL SHALL BE ASTM. A615, GRADE 60.

6 MAY 96

FINLEY McNARY/JANSSEN SPAANS
a Joint Venture

Finley McNary Engineers, Inc
1391 Timberlane Road Suite 200
Tallahassee, Florida 32312-1721

Janssen & Spaans Engineers, Inc.
2825 East 56th Street
Indianapolis, Indiana 46220

REVISIONS

DATE	BY	DESCRIPTION	DATE	BY	DESCRIPTION	DATE	BY	DESCRIPTION	DATE	BY

	NAME	DATE
DR. BY	J.L.S.	1/96
CHK. BY	C.W.N.	1/96
SUPV.	H.D.R.	1/96

FINLEY McNARY/JANSSEN SPAANS

BOARD OF COUNTY COMMISSIONERS
LEE, COUNTY, FLORIDA
DEPARTMENT OF TRANSPORTATION

MIDPOINT BRIDGE
REINFORCING BAR LIST (12)

PIER NO. 40

MARK SIZE	MARK DES	LENGTH FT IN	NO BARS	TYP BAR	STY A	STY G	B FT IN FR	C FT IN FR	D FT IN FR	E FT IN FR	F FT IN FR	H FT IN FR	J FT IN	K FT IN	N	O
10	P1	41 - 0	66	18	3	3	37 - 4									
10	P2	VARIES	2	18	3	3	VARIES									
		33 - 4	SETS				29 - 8									
		TO	OF				TO									
		40 - 6	9				36 - 9 - ¼									
10	P3	VARIES	2	18	3	3	VARIES									
		25 - 4	SETS				21 - 8									
		TO	OF				TO									
		28 - 8	5				24 - 11 ½									
10	P4	VARIES	2	18	3	3	VARIES									
		51 - 11	SETS				48 - 2 ¼									
		TO	OF				TO									
		56 - 9	4				53 - 1									
10	P5	VARIES	4	17	3		VARIES									
		34 - 11	SETS				33 - 1									
		TO	OF				TO									
		38 - 0	5				36 - 2									
10	P6	38 - 10	40	17	3		37 - 0									
6	P7A	VARIES	2	1			VARIES									
		31 - 4	SETS				31 - 4									
		TO	OF				TO									
		39 - 9	14				39 - 9									
6	P7B	VARIES	2	1			VARIES									
		21 - 4	SETS				21 - 4									
		TO	OF				TO									
		29 - 9	14				29 - 9									
6	P8A	40 - 2	40	1			40 - 2									
6	P8B	30 - 2	40	1			30 - 2									
6	P9	VARIES	2	18	3	3	VARIES									
		23 - 8	SETS				21 - 8									
		TO	OF				TO									
		38 - 5	13				36 - 4 - ¼									
6	P10	39 - 4	64	18	3	3	37 - 4									
10	P11A	VARIES	2	17	3		VARIES									
		41 - 4	SETS				39 - 6									
		TO	OF				TO									
		50 - 5	15				48 - 7									
10	P11B	VARIES	2	17	3		VARIES									
		19 - 0	SETS				17 - 2									
		TO	OF				TO									
		28 - 1	15				26 - 3									
10	P12A	50 - 10	40	17	3		49 - 0									
10	P12B	28 - 6	40	17	3		26 - 8									
6	P13A	21 - 2	16	1			21 - 2									
6	P13B	47 - 9	16	1			47 - 9									
6	P13C	18 - 9	32	13			12 - 6 - ¼	3 - 1	3 - 1						51X	40X
6	P14	VARIES	2	1			VARIES									
		22 - 11	SETS				22 - 10 - ¾									
		TO	OF				TO									
		36 - 6	12				36 - 6									
6	P15	37 - 4	64	1			37 - 4									
4	P16	6 - 4	140	1			6 - 4									
4	P17	6 - 4	180	1			6 - 4									
11	P21A	13 - 11	34	17	3		11 - 11									
11	P21B	11 - 11	34	17	3		9 - 11									
11	P22	20 - 0	68	1			20 - 0									
11	P23A	15 - 11	34	1			15 - 11									
11	P23B	13 - 11	34	1			13 - 11									
4	P24	18 - 6	136	4	4	4	4 - 0	4 - 10 - ¼								
7	P25	81 - 6	6	41			44 - 9	36 - 9					4 - 0		1	
7	P26	74 - 10	2	41			41 - 5	33 - 5					4 - 0		1	
7	P27	69 - 0	2	41			38 - 6	30 - 6					4 - 0		1	
7	P28	63 - 2	2	41			35 - 7	27 - 7					4 - 0		1	
11	P29	28 - 9	30	1			28 - 9									
11	P30	81 - 0	15	41			44 - 3	36 - 9					3 - 6		1	
11	P31	46 - 0	22	1			46 - 0									
4	P32	18 - 1	22	12			13 - 4	4 - 9								16
5	P33	VARIES	6	4	4	4	VARIES	2 - 8 - ½								
		11 - 7	SETS				2 - 7									
		TO	OF				TO									
		18 - 10	31				6 - 2 - ¼									
5	P34	18 - 11	144	4	4	4	6 - 3	2 - 8 - ½								
4	P35	5 - 8	38	18	1	3	4 - 6									

PIER NO. 40 (CONT.)

MARK SIZE	MARK DES	LENGTH FT IN	NO BARS	TYP BAR	STY A	STY G	B FT IN FR	C FT IN FR	D FT IN FR	E FT IN FR	F FT IN FR	H FT IN FR	J FT IN	K FT IN	N	O
4	P40	2 - 5	192	18	1	3	1 - 3									
4	P41A	2 - 0	80	1			2 - 0									
4	P41B	6 - 8	36	11			2 - 0	2 - 4	2 - 4							
8	P50	4 - 10	192	17	1		3 - 9									

NOTE:
FOR STANDARD BAR BENDING DETAILS, SEE SHEET A-6. REINFORCING STEEL SHALL BE ASTM, A615, GRADE 60.

HFDR 6 MAY 96

FINLEY McNARY/JANSSEN SPAANS
a Joint Venture

Finley McNary Engineers, Inc
1391 Timberlane Road Suite 200
Tallahassee, Florida 32312-1721

Janssen & Spaans Engineers, Inc.
2825 East 56th Street
Indianapolis, Indiana 46220

REVISIONS

DATE	BY	DESCRIPTION	DATE	BY	DESCRIPTION	DATE	BY	DESCRIPTION	DATE	BY

	NAME	DATE
DR. BY	J.L.S.	1/96
CHK. BY	C.W.N.	1/96
SUPV.	H.D.R.	1/96

FINLEY McNARY/JANSSEN SPAANS

BOARD OF COUNTY COMMISSIONERS
LEE, COUNTY, FLORIDA
DEPARTMENT OF TRANSPORTATION

MIDPOINT BRIDGE
REINFORCING BAR LIST (13)

BX1-141

PIER NO. 41

MARK SIZE	MARK DES	LENGTH FT-IN	NO BARS	TYP BAR	STY A	STY G	B FT-IN-FR	C FT-IN-FR	D FT-IN-FR	E FT-IN-FR	F FT-IN-FR	H FT-IN-FR	J FT-IN	K FT-IN	#	#
11	P1	41 - 4	76	18	3	3	37 - 4									
11	P2	VARIES	2	18	3	3	VARIES									
		34 - 3	SETS				30 - 2 - ¼									
		TO	OF				TO									
		41 - 1	11				37 - 0 - ¾									
11	P3	VARIES	2	18	3	3	VARIES									
		25 - 9	SETS				21 - 8 - ¼									
		TO	OF				TO									
		29 - 2	6				25 - 2									
10	P4	VARIES	2	18	3	3	VARIES									
		52 - 1	SETS				48 - 4 - ½									
		TO	OF				TO									
		56 - 11	5				53 - 2 - ½									
10	P5A	VARIES	2	17	3		VARIES									
		40 - 0	SETS				38 - 2									
		TO	OF				TO									
		43 - 1	6				41 - 3									
10	P5B	VARIES	2	17	3		VARIES									
		30 - 0	SETS				28 - 2									
		TO	OF				TO									
		33 - 1	6				31 - 3									
10	P6A	43 - 6	23	17	1		41 - 8									
10	P6B	33 - 6	23	17	3		31 - 8									
7	P7A	VARIES	2	1			VARIES									
		36 - 0	SETS				36 - 0									
		TO	OF				TO									
		44 - 8	16				44 - 8									
7	P7B	VARIES	2	1			VARIES									
		18 - 7	SETS				18 - 7									
		TO	OF				TO									
		27 - 3	16				27 - 3									
7	P8A	44 - 10	46	1			44 - 10									
7	P8B	27 - 5	46	1			27 - 5									
7	P9	VARIES	2	18	3	3	VARIES									
		24 - 1	SETS				21 - 8 - ¾									
		TO	OF				TO									
		39 - 6	15				37 - 1 - ½									
7	P10	39 - 8	71	18	3	3	37 - 4									
11	P11A	VARIES	2	17	3		VARIES									
		41 - 0	SETS				39 - 0									
		TO	OF				TO									
		50 - 3	17				48 - 3									
11	P11B	VARIES	2	17	3		VARIES									
		24 - 3	SETS				22 - 3									
		TO	OF				TO									
		33 - 6	17				31 - 6									
11	P12A	50 - 5	46	17	3		48 - 5									
11	P12B	33 - 8	46	17	3		31 - 8									
7	P13A	21 - 2	14	1			21 - 2									
7	P13B	47 - 9	14	1			47 - 9									
7	P13C	20 - 9	28	13			12 - 6 - ¼	4 - 1	4 - 1						51X	40X
7	P14	VARIES	2	1			VARIES									
		22 - 10	SETS				22 - 10									
		TO	OF				TO									
		37 - 2	14				37 - 1 - ½									
7	P15	37 - 4	71	1			37 - 4									
7	P16	6 - 4	160	1			6 - 4									
7	P17	6 - 4	202	1			6 - 4									
11	P21A	13 - 11	34	17	3		11 - 11									
11	P21B	11 - 11	34	17	3		9 - 11									
11	P22	20 - 0	68	1			20 - 0									
11	P23A	20 - 0	34	1			20 - 0									
11	P23B	18 - 0	34	1			18 - 0									
4	P24	18 - 6	156	4	4	4	4 - 0	4 - 10 - ¼								
7	P25	81 - 6	6	41			44 - 9	36 - 9					4 - 0		1	
7	P26	74 - 10	2	41			41 - 5	33 - 5					4 - 0		1	
7	P27	69 - 0	2	41			38 - 6	30 - 6					4 - 0		1	
7	P28	63 - 2	2	41			35 - 7	27 - 7					4 - 0		1	
11	P29	28 - 9	30	1			28 - 9									
11	P30	81 - 0	15	41			44 - 3	36 - 9					3 - 6		1	
11	P31	46 - 0	22	1			46 - 0									
4	P32	18 - 1	22	12			13 - 4	4 - 9								16
5	P33	VARIES	6	4	4	4	VARIES	2 - 8 - ½								
		11 - 7	SETS				2 - 7									
		TO	OF				TO									
		18 - 10	31				6 - 2 - ¼									
5	P34	18 - 11	144	4	4	4	6 - 3	2 - 8 - ½								
4	P35	5 - 8	38	18	1	3	4 - 6									

PIER NO. 41 (CONT.)

MARK SIZE	MARK DES	LENGTH FT-IN	NO BARS	TYP BAR	STY A	STY G	B FT-IN-FR	C FT-IN-FR	D FT-IN-FR	E FT-IN-FR	F FT-IN-FR	H FT-IN-FR	J FT-IN	K FT-IN	#	#
4	P40	2 - 3	192	18	1	3	1 - 0 - ¾									
4	P40A	2 - 0	80	1			2 - 0									
4	P40B	6 - 8	96	11			2 - 0	2 - 4	2 - 4							
10	P50	6 - 3	196	17	1		4 - 10									

NOTE:
FOR STANDARD BAR BENDING DETAILS, SEE SHEET A-6. REINFORCING STEEL SHALL BE ASTM. A615, GRADE 60.

FINLEY McNARY/JANSSEN SPAANS
a Joint Venture

Finley McNary Engineers, Inc
1391 Timberlane Road Suite 200
Tallahassee, Florida 32312-1721

Janssen & Spaans Engineers, Inc.
2825 East 56th Street
Indianapolis, Indiana 46220

REVISIONS

DATE	BY	DESCRIPTION	DATE	BY	DESCRIPTION	DATE	BY	DESCRIPTION	DATE	BY

	NAME	DATE
DR. BY	J.L.S.	1/96
CHK. BY	C.W.N.	1/96
SUPV.	H.D.R.	1/96

FINLEY McNARY/JANSSEN SPAANS

BOARD OF COUNTY COMMISSIONERS
LEE COUNTY, FLORIDA
DEPARTMENT OF TRANSPORTATION

MIDPOINT BRIDGE
REINFORCING BAR LIST (14)

74

PIER 42 & 45 (2 REQUIRED)

MARK SIZE	MARK DES	LENGTH FT IN	NO BARS	TYP BAR	STY A	STY G	B FT IN FR	C FT IN FR	D FT IN FR	E FT IN FR	F FT IN FR	H FT IN FR	J FT IN	K FT IN	N	θ
11	P1	41-4	76	18	3	3	37-4									
11	P2	VARIES 34-3 TO 41-1	2 SETS OF 11	18	3	3	VARIES 30-2 1/4 TO 37-0 3/4									
11	P3	VARIES 25-9 TO 29-2	2 SETS OF 6	18	3	3	VARIES 21-8 3/4 TO 25-2									
10	P4	VARIES 52-1 TO 56-11	2 SETS OF 5	18	3	3	VARIES 48-4 1/4 TO 53-2 1/2									
10	P5A	VARIES 40-0 TO 43-1	2 SETS OF 6	17	3		VARIES 38-2 TO 41-3									
10	P5B	VARIES 30-0 TO 33-1	2 SETS OF 6	17	3		VARIES 28-2 TO 31-3									
10	P6A	43-6	23	17	3		41-8									
10	P6B	33-6	23	17	3		31-8									
7	P7A	VARIES 36-0 TO 44-8	2 SETS OF 16	1			VARIES 36-0 TO 44-8									
7	P7B	VARIES 18-7 TO 27-3	2 SETS OF 16	1			VARIES 18-7 TO 27-3									
7	P8A	44-10	46	1			44-10									
7	P8B	27-5	46	1			27-5									
7	P9	VARIES 24-1 TO 39-6	2 SETS OF 15	18	3	3	VARIES 21-8 3/4 TO 37-1 1/2									
7	P10	39-8	71	18	3	3	37-4									
11	P11A	VARIES 41-0 TO 50-3	2 SETS OF 17	17	3		VARIES 39-0 TO 48-3									
11	P11B	VARIES 24-3 TO 33-6	2 SETS OF 17	17	3		VARIES 22-3 TO 31-6									
11	P12A	50-5	46	17	3		48-5									
11	P12B	33-8	46	17	3		31-8									
7	P13A	21-2	14	1			21-2									
7	P13B	47-9	14	1			47-9									
7	P13C	20-9	28	13			12-6 1/4	4-1	4-1						51"	40°
7	P14	VARIES 22-10 TO 37-2	2 SETS OF 14	1			VARIES 22-10 TO 37-1 1/2									
7	P15	37-4	71	1			37-4									
7	P16	6-4	160	1			6-4									
7	P17	6-4	202	1			6-4									
11	P21A	13-11	88	10			11-11	2-0								
11	P21B	11-11	88	10			9-11	2-0								
11	P22	20-0	176	1			20-0									
11	P23A	22-2	88	1			22-2									
11	P23B	20-2	88	1			20-2									
4	P24	19-2	320	4	4	4	4-0	5-2 1/2								
8	P25	82-9	8	41			46-0	36-9					5-3		1	
8	P26	77-5	2	41			43-4	34-1					5-3		1	
8	P27	72-9	2	41			41-0	31-9					5-3		1	

PIER 42 & 45 (2 REQUIRED) CONT.

MARK SIZE	MARK DES	LENGTH FT IN	NO BARS	TYP BAR	STY A	STY G	B FT IN FR	C FT IN FR	D FT IN FR	E FT IN FR	F FT IN FR	H FT IN FR	J FT IN	K FT IN	N	θ
8	P28	67-11	2	41			38-7	29-4					5-3		1	
8	P29	63-1	2	41			36-2	26-11					5-3		1	
11	P30	46-0	18	1			46-0									
11	P31	81-0	12	41			44-3	36-9					3-6		1	
5	P32	VARIES 14-2 TO 20-6	6 SETS OF 13	4	4	4	VARIES 3-7 TO 6-9	2-11 3/4								
5	P33	23-0	153	4	4	4	8-0	2-11 3/4								
11	P34	28-9	24	1			28-9									
4	P35	18-3	18	12			13-6	4-9								19°
5	P36	VARIES 20-10 TO 22-10	6 SETS OF 6	4	4	4	VARIES 6-11 TO 7-11	2-11 3/4								
4	P37	5-8	38	18	1	3	4-6									
6	P41	6-9	56	11			0-5	3-2	3-2							
4	P42	16-3	28	4	4	4	0-6	7-3								
4	P47	2-3	80	1			2-3									
4	P48	6-5	96	11			2-0	2-2 1/2	2-2 1/2							
10	P50	6-3	196	17	1		4-10									

NOTE:
FOR STANDARD BAR BENDING DETAILS, SEE SHEET A-6. REINFORCING STEEL SHALL BE ASTM, A615, GRADE 60.

Michael J. Walter
5/13/96

FINLEY McNARY/JANSSEN SPAANS
a Joint Venture

Finley McNary Engineers, Inc
1391 Timberlane Road Suite 200
Tallahassee, Florida 32312-1721

Janssen & Spaans Engineers, Inc.
2825 East 56th Street
Indianapolis, Indiana 46220

REVISIONS

DATE	BY	DESCRIPTION	DATE	BY	DESCRIPTION	DATE	BY	DESCRIPTION	DATE	BY

	NAME	DATE
DR. BY	TAL	1/96
CHK. BY	MJH	1/96
SUPV.	MJH	1/96

FINLEY McNARY/JANSSEN SPAANS

BOARD OF COUNTY COMMISSIONERS
LEE, COUNTY, FLORIDA
DEPARTMENT OF TRANSPORTATION

MIDPOINT BRIDGE
REINFORCING BAR LIST (15)

PIER 43 & 44 (2 REQUIRED)

MARK SIZE	MARK DES	LENGTH FT-IN	NO BARS	TYP BAR	STY A	STY G	B FT-IN-FR	C FT-IN-FR	D FT-IN-FR	E FT-IN-FR	F FT-IN-FR	H FT-IN-FR	J FT-IN	K FT-IN	N	θ
11	P1	41-4	76	18	3	3	37-4									
11	P2	VARIES 34-3 TO 41-1	2 SETS OF 11	18	3	3	VARIES 30-2 1/4 TO 37-0 3/4									
11	P3	VARIES 25-9 TO 29-2	2 SETS OF 6	18	3	3	VARIES 21-8 3/4 TO 25-2									
10	P4	VARIES 52-1 TO 56-11	2 SETS OF 5	18	3	3	VARIES 48-4 1/4 TO 53-2 1/2									
10	P5A	VARIES 40-0 TO 43-1	2 SETS OF 6	17	3		VARIES 38-2 TO 41-3									
10	P5B	VARIES 30-0 TO 33-1	2 SETS OF 6	17	3		VARIES 28-2 TO 31-3									
10	P6A	43-6	23	17	3		41-8									
10	P6B	33-6	23	17	3		31-8									
7	P7A	VARIES 36-0 TO 44-8	2 SETS OF 16	1			VARIES 36-0 TO 44-8									
7	P7B	VARIES 18-7 TO 27-3	2 SETS OF 16	1			VARIES 18-7 TO 27-3									
7	P8A	44-10	46	1			44-10									
7	P8B	27-5	46	1			27-5									
7	P9	VARIES 24-1 TO 39-6	2 SETS OF 15	18	3	3	VARIES 21-8 3/4 TO 37-1 1/2									
7	P10	39-8	71	18	3	3	37-4									
11	P11A	VARIES 41-0 TO 50-3	2 SETS OF 17	17	3		VARIES 39-0 TO 48-3									
11	P11B	VARIES 24-3 TO 33-6	2 SETS OF 17	17	3		VARIES 22-3 TO 31-6									
11	P12A	50-5	46	17	3		48-5									
11	P12B	33-8	46	17	3		31-8									
7	P13A	21-2	14	1			21-2									
7	P13B	47-9	14	1			47-9									
7	P13C	20-9	28	13			12-6 1/4	4-1	4-1						51"	40"
7	P14	VARIES 22-10 TO 37-2	2 SETS OF 14	1			VARIES 22-10 TO 37-1 1/2									
7	P15	37-4	71	1			37-4									
7	P16	6-4	160	1			6-4									
7	P17	6-4	202	1			6-4									
11	P21A	13-11	88	10			11-11	2-0								
11	P21B	11-11	88	10			9-11	2-0								
11	P22	20-0	176	1			20-0									
11	P23A	20-9	88	1			20-9									
11	P23B	18-9	88	1			18-9									
4	P24	19-2	308	4	4	4	4-0	5-2 1/2								
8	P25	82-9	8	41			46-0	36-9					5-3		1	
8	P26	77-5	2	41			43-4	34-1					5-3		1	
8	P27	72-9	2	41			41-0	31-9					5-3		1	

PIER 43 & 44 (2 REQUIRED) CONT.

MARK SIZE	MARK DES	LENGTH FT-IN	NO BARS	TYP BAR	STY A	STY G	B FT-IN-FR	C FT-IN-FR	D FT-IN-FR	E FT-IN-FR	F FT-IN-FR	H FT-IN-FR	J FT-IN	K FT-IN	N	θ
8	P28	67-11	2	41			38-7	29-4					5-3		1	
8	P29	63-1	2	41			36-2	26-11					5-3		1	
11	P30	46-0	24	1			46-0									
11	P31	81-0	12	41			44-3	36-9					3-6		1	
5	P32	VARIES 14-2 TO 20-6	6 SETS OF 21	4	4	4	VARIES 3-7 TO 6-9	2-11 3/4								
5	P33	23-0	66	4	4	4	8-0	2-11 3/4								
11	P34	28-9	48	1			28-9									
4	P35	18-3	24	12			13-6	4-9								19°
5	P36	VARIES 20-9 TO 22-10	6 SETS OF 9	4	4	4	VARIES 6-11 TO 7-11	2-11 3/4								
4	P37	5-8	38	18	1	3	4-6									
5	P38	2-3	32	1			2-3									
4	P39	4-9	48	11			0-8 1/2	2-0	2-0							
4	P40	2-4	336	18	1	3	1-2									
7	P41	9-5	182	11			1-1	4-2	4-2							
4	P42	17-7	28	4	4	4	7-3	1-2								
4	P45	2-3	12	1			2-3									
4	P46	7-0	12	11			2-8	2-2	2-2							
4	P47	2-3	66	1			2-3									
4	P48	8-10	36	11			4-6	2-2	2-2							
10	P50	6-3	196	17	1		4-10									
6	P51	24-0	138	4	4	4	8-0	2-11 3/4								

NOTE:
FOR STANDARD BAR BENDING DETAILS, SEE SHEET A-6. REINFORCING STEEL SHALL BE ASTM, A615, GRADE 60 AND SHALL BE EPOXY COATED.

Michael J. Halter
5/3/96

FINLEY McNARY/JANSSEN SPAANS
a Joint Venture

Finley McNary Engineers, Inc
1391 Timberlane Road Suite 200
Tallahassee, Florida 32312-1721

Janssen & Spaans Engineers, Inc.
2825 East 56th Street
Indianapolis, Indiana 46220

REVISIONS

DATE	BY	DESCRIPTION	DATE	BY	DESCRIPTION	DATE	BY	DESCRIPTION	DATE	BY

	NAME	DATE
DR. BY	TAL	1/96
CHK. BY	MJH	1/96
SUPV.	MJH	1/96

FINLEY McNARY/JANSSEN SPAANS

BOARD OF COUNTY COMMISSIONERS
LEE, COUNTY, FLORIDA
DEPARTMENT OF TRANSPORTATION

MIDPOINT BRIDGE
REINFORCING BAR LIST (16)

BX1-144

PIER NO. 46

MARK SIZE	MARK DES	LENGTH FT IN	NO BARS	TYP BAR	STY A	STY G	B FT IN FR	C FT IN FR	D FT IN FR	E FT IN FR	F FT IN FR	H FT IN FR	J FT IN	K FT IN	N	O
11	P1	41 - 4	76	18	3	3	37 - 4									
11	P2	VARIES	2	18	3	3	VARIES									
		34 - 3	SETS				30 - 2 - ¼									
		TO	OF				TO									
		41 - 1	11				37 - 0 - ¾									
11	P3	VARIES	2	18	3	3	VARIES									
		25 - 9	SETS				21 - 8 - ¾									
		TO	OF				TO									
		29 - 2	6				25 - 2									
10	P4	VARIES	2	18	3	3	VARIES									
		52 - 1	SETS				48 - 4 - ¼									
		TO	OF				TO									
		56 - 11	5				53 - 2 - ½									
10	P5A	VARIES	2	17	3		VARIES									
		40 - 0	SETS				38 - 2									
		TO	OF				TO									
		43 - 1	6				41 - 3									
10	P5B	VARIES	2	17	3		VARIES									
		30 - 0	SETS				28 - 2									
		TO	OF				TO									
		33 - 1	6				31 - 3									
10	P6A	43 - 6	23	17	3		41 - 8									
10	P6B	33 - 6	23	17	3		31 - 8									
7	P7A	VARIES	2	1			VARIES									
		36 - 0	SETS				36 - 0									
		TO	OF				TO									
		44 - 8	16				44 - 8									
7	P7B	VARIES	2	1			VARIES									
		18 - 7	SETS				18 - 7									
		TO	OF				TO									
		27 - 3	16				27 - 3									
7	P8A	44 - 10	46	1			44 - 10									
7	P8B	27 - 5	46	1			27 - 5									
7	P9	VARIES	2	18	3	3	VARIES									
		24 - 1	SETS				21 - 8 - ¾									
		TO	OF				TO									
		39 - 6	15				37 - 1 - ½									
7	P10	39 - 8	71	18	3	3	37 - 4									
11	P11A	VARIES	2	17	3		VARIES									
		41 - 0	SETS				39 - 0									
		TO	OF				TO									
		50 - 3	17				48 - 3									
11	P11B	VARIES	2	17	3		VARIES									
		24 - 3	SETS				22 - 3									
		TO	OF				TO									
		33 - 6	17				31 - 6									
11	P12A	50 - 5	46	17	3		48 - 5									
11	P12B	33 - 8	46	17	3		31 - 8									
7	P13A	21 - 2	14	1			21 - 2									
7	P13B	41 - 9	14	1			41 - 9									
7	P13C	20 - 9	28	13			12 - 6 - ¼	4 - 1	4 - 1						51N	40N
7	P14	VARIES	2	1			VARIES									
		22 - 10	SETS				22 - 10									
		TO	OF				TO									
		37 - 2	14				37 - 1 - ½									
7	P15	37 - 4	71	1			37 - 4									
7	P16	6 - 4	160	1			6 - 4									
7	P17	6 - 4	202	1			6 - 4									
11	P21A	13 - 11	34	17	3		11 - 11									
11	P21B	11 - 11	34	17	3		9 - 11									
11	P22	20 - 0	68	1			20 - 0									
11	P23A	20 - 3	34	1			20 - 3									
11	P23B	18 - 3	34	1			18 - 3									
4	P24	18 - 6	156	4	4	4	4 - 0	4 - 10 - ¼								
7	P25	81 - 6	6	41			44 - 9	36 - 9					4 - 0		1	
7	P26	74 - 10	2	41			41 - 5	33 - 5					4 - 0		1	
7	P27	69 - 0	2	41			38 - 6	30 - 6					4 - 0		1	
7	P28	63 - 2	2	41			35 - 7	27 - 7					4 - 0		1	
11	P29	28 - 9	30	1			28 - 9									
11	P30	81 - 0	15	41			44 - 3	36 - 9					3 - 6		1	
11	P31	46 - 0	22	1			46 - 0									
4	P32	18 - 1	22	12			13 - 4	4 - 9								16
5	P33	VARIES	6	4	4	4	VARIES	2 - 8 - ½								
		11 - 7	SETS				2 - 7									
		TO	OF				TO									
		18 - 10	31				6 - 2 - ¼									
5	P34	18 - 11	144	4	4	4	6 - 3	2 - 8 - ½								
4	P35	5 - 8	38	18	1	3	4 - 6									

PIER NO. 46 (CONT.)

MARK SIZE	MARK DES	LENGTH FT IN	NO BARS	TYP BAR	STY A	STY G	B FT IN FR	C FT IN FR	D FT IN FR	E FT IN FR	F FT IN FR	H FT IN FR	J FT IN	K FT IN	N	O
4	P40	2 - 3	192	18	1	3	1 - 0 - ¾									
4	P47A	2 - 0	80	1			2 - 0									
4	P48	6 - 8	96	11			2 - 0	2 - 4	2 - 4							
10	P50	6 - 3	196	17	1		4 - 10									

NOTE:
FOR STANDARD BAR BENDING DETAILS, SEE SHEET A-6. REINFORCING STEEL SHALL BE ASTM. A615, GRADE 60.

HDR 6 MAY 96

FINLEY McNARY/JANSSEN SPAANS
a Joint Venture

Finley McNary Engineers, Inc
1391 Timberlane Road Suite 200
Tallahassee, Florida 32312-1721

Janssen & Spaans Engineers, Inc.
2825 East 56th Street
Indianapolis, Indiana 46220

REVISIONS

DATE	BY	DESCRIPTION	DATE	BY	DESCRIPTION	DATE	BY	DESCRIPTION	DATE	BY

	NAME	DATE
DR. BY	J.L.S.	1/96
CHK. BY	C.W.N.	1/96
SUPV.	H.D.R.	1/96

FINLEY McNARY/JANSSEN SPAANS

BOARD OF COUNTY COMMISSIONERS
LEE, COUNTY, FLORIDA
DEPARTMENT OF TRANSPORTATION

MIDPOINT BRIDGE
REINFORCING BAR LIST (17)

PIER NO. 47

MARK SIZE	MARK DES	LENGTH FT IN	NO BARS	TYP BAR	STY A	STY G	B FT IN FR	C FT IN FR	D FT IN FR	E FT IN FR	F FT IN FR	H FT IN FR	J FT IN	K FT IN	N	O
10	P1	41 - 0	66	18	3	3	37 - 4									
10	P2	VARIES	2	18	3	3	VARIES									
		33 - 4	SETS				29 - 8									
		TO	OF				TO									
		40 - 6	9				36 - 9 - 3/8									
10	P3	VARIES	2	18	3	3	VARIES									
		25 - 4	SETS				21 - 8									
		TO	OF				TO									
		28 - 8	5				24 - 11 - 1/2									
10	P4	VARIES	2	18	3	3	VARIES									
		51 - 11	SETS				48 - 2 - 1/4									
		TO	OF				TO									
		56 - 9	4				53 - 1									
10	P5	VARIES	4	17	3		VARIES									
		34 - 11	SETS				33 - 1									
		TO	OF				TO									
		38 - 0	5				36 - 2									
10	P6	38 - 10	40	17	3		37 - 0									
6	P7A	VARIES	2	1			VARIES									
		31 - 4	SETS				31 - 4									
		TO	OF				TO									
		39 - 9	14				39 - 9									
6	P7B	VARIES	2	1			VARIES									
		21 - 4	SETS				21 - 4									
		TO	OF				TO									
		29 - 9	14				29 - 9									
6	P8A	40 - 2	40	1			40 - 2									
6	P8B	30 - 2	40	1			30 - 2									
6	P9	VARIES	2	18	3	3	VARIES									
		23 - 8	SETS				21 - 8									
		TO	OF				TO									
		38 - 5	13				36 - 4 - 3/4									
6	P10	39 - 4	64	18	3	3	37 - 4									
10	P11A	VARIES	2	17	3		VARIES									
		41 - 4	SETS				39 - 6									
		TO	OF				TO									
		50 - 5	15				48 - 7									
10	P11B	VARIES	2	17	3		VARIES									
		19 - 0	SETS				17 - 2									
		TO	OF				TO									
		28 - 1	15				26 - 3									
10	P12A	50 - 10	40	17	3		49 - 0									
10	P12B	28 - 6	40	17	3		26 - 8									
6	P13A	21 - 2	16	1			21 - 2									
6	P13B	47 - 9	16	1			47 - 9									
6	P13C	18 - 9	32	13			12 - 6 - 1/4	3 - 1	3 - 1						51X	40X
6	P14	VARIES	2	1			VARIES									
		22 - 11	SETS				22 - 10 - 3/4									
		TO	OF				TO									
		36 - 6	12				36 - 6									
6	P15	37 - 4	64	1			37 - 4									
4	P16	6 - 4	140	1			6 - 4									
4	P17	6 - 4	180	1			6 - 4									
11	P21A	13 - 11	34	17	3		11 - 11									
11	P21B	11 - 11	34	17	3		9 - 11									
11	P22	20 - 0	68	1			20 - 0									
11	P23A	16 - 1	34	1			16 - 1									
11	P23B	14 - 1	34	1			14 - 1									
4	P24	18 - 6	140	4	4	4	4 - 0	4 - 10 - 1/4								
7	P25	81 - 6	6	41			44 - 9	36 - 9					4 - 0		1	
7	P26	74 - 10	2	41			41 - 5	33 - 5					4 - 0		1	
7	P27	69 - 0	2	41			38 - 6	30 - 6					4 - 0		1	
7	P28	63 - 2	2	41			35 - 7	27 - 7					4 - 0		1	
11	P29	28 - 9	30	1			28 - 9									
11	P30	81 - 0	15	41			44 - 3	36 - 9					3 - 6		1	
11	P31	46 - 0	22	1			46 - 0									
4	P32	18 - 1	22	12			13 - 4	4 - 9								16
5	P33	VARIES	6	4	4	4	VARIES	2 - 8 - 1/2								
		11 - 7	SETS				2 - 7									
		TO	OF				TO									
		18 - 10	31				6 - 2 - 1/4									
5	P34	18 - 11	144	4	4	4	6 - 3	2 - 8 - 1/2								
4	P35	5 - 8	38	18	1	3	4 - 6									

PIER NO. 47 (CONT'D)

MARK SIZE	MARK DES	LENGTH FT IN	NO BARS	TYP BAR	STY A	STY G	B FT IN FR	C FT IN FR	D FT IN FR	E FT IN FR	F FT IN FR	H FT IN FR	J FT IN	K FT IN	N	O
4	P40	2 - 5	168	18	1	3	1 - 3									
4	P47A	2 - 0	80	1			2 - 0									
4	P47B	6 - 8	96	11			2 - 0		2 - 4	2 - 4						
8	P50	4 10	192	17	1		3 - 9									

NOTE:
FOR STANDARD BAR BENDING DETAILS, SEE SHEET A-6. REINFORCING STEEL SHALL BE ASTM, A615, GRADE 60.

FINLEY McNARY/JANSSEN SPAANS
a Joint Venture

Finley McNary Engineers, Inc
1391 Timberlane Road Suite 200
Tallahassee, Florida 32312-1721

Janssen & Spaans Engineers, Inc.
2825 East 56th Street
Indianapolis, Indiana 46220

6 MAY 96

REVISIONS

DATE	BY	DESCRIPTION	DATE	BY	DESCRIPTION	DATE	BY	DESCRIPTION	DATE	BY

	NAME	DATE
DR. BY	J.L.S.	1/96
CHK. BY	C.W.N.	1/96
SUPV.	H.D.R.	1/96

FINLEY McNARY/JANSSEN SPAANS

BOARD OF COUNTY COMMISSIONERS
LEE COUNTY, FLORIDA
DEPARTMENT OF TRANSPORTATION

MIDPOINT BRIDGE
REINFORCING BAR LIST (1B)

PIER NO. 48

MARK SIZE	MARK DES	LENGTH FT IN	NO BARS	TYP BAR	STY A	STY G	B FT IN FR	C FT IN FR	D FT IN FR	E FT IN FR	F FT IN FR	H FT IN FR	J FT IN	K FT IN	N	O
10	P1	41 - 0	66	18	3	3	37 - 4									
10	P2	VARIES	2	18	3	3	VARIES									
		33 - 4	SETS				29 - 8									
		TO	OF				TO									
		40 - 6	9				36 - 9 - ¼									
10	P3	VARIES	2	18	3	3	VARIES									
		25 - 4	SETS				21 - 8									
		TO	OF				TO									
		28 - 8	5				24 - 11 - ½									
10	P4	VARIES	2	18	3	3	VARIES									
		51 - 11	SETS				48 - 2 - ¼									
		TO	OF				TO									
		56 - 9	4				53 - 1									
10	P5	VARIES	4	17	3		VARIES									
		34 - 11	SETS				33 - 1									
		TO	OF				TO									
		38 - 0	5				36 - 2									
10	P6	38 - 10	40	17	3		37 - 0									
6	P7A	VARIES	2	1			VARIES									
		31 - 4	SETS				31 - 4									
		TO	OF				TO									
		39 - 9	14				39 - 9									
6	P7B	VARIES	2	1			VARIES									
		21 - 4	SETS				21 - 4									
		TO	OF				TO									
		29 - 9	14				29 - 9									
6	P8A	40 - 2	40	1			40 - 2									
6	P8B	30 - 2	40	1			30 - 2									
6	P9	VARIES	2	18	3	3	VARIES									
		23 - 8	SETS				21 - 8									
		TO	OF				TO									
		38 - 5	13				36 - 4 - 3/16									
6	P10	39 - 4	64	18	3	3	37 - 4									
10	P11A	VARIES	2	17	3		VARIES									
		41 - 4	SETS				39 - 6									
		TO	OF				TO									
		50 - 5	15				48 - 1									
10	P11B	VARIES	2	17	3		VARIES									
		19 - 0	SETS				17 - 2									
		TO	OF				TO									
		28 - 1	15				26 - 3									
10	P12A	50 - 10	40	17	3		49 - 0									
10	P12B	28 - 6	40	17	3		26 - 8									
6	P13A	21 - 2	16	1			21 - 2									
6	P13B	47 - 9	16	1			47 - 9									
6	P13C	18 - 9	32	13			12 - 6 - ¼	3 - 1	3 - 1						51N	40N
6	P14	VARIES	2	1			VARIES									
		22 - 11	SETS				22 - 10 - ¾									
		TO	OF				TO									
		36 - 6	12				36 - 6									
6	P15	37 - 4	64	1			37 - 4									
4	P16	6 - 4	140	1			6 - 4									
4	P17	6 - 4	180	1			6 - 4									
11	P21A	13 - 11	34	17	3		11 - 11									
11	P21B	11 - 11	34	17	3		9 - 11									
11	P22A	31 - 7	34	1			31 - 7									
11	P22B	29 - 7	34	1			29 - 7									
4	P24	18 - 6	120	4	4	4	4 - 0	4 - 10 - ¼								
7	P25	81 - 6	6	41			44 - 9	36 - 9					4 - 0		1	
7	P26	74 - 10	2	41			41 - 5	33 - 5					4 - 0		1	
7	P27	69 - 0	2	41			38 - 6	30 - 6					4 - 0		1	
7	P28	63 - 2	2	41			35 - 7	27 - 7					4 - 0		1	
11	P29	28 - 9	30	1			28 - 9									
11	P30	81 - 0	15	41			44 - 3	36 - 9					3 - 6		1	
11	P31	46 - 0	22	1			46 - 0									
4	P32	18 - 1	22	12			13 - 4	4 - 9								16
5	P33	VARIES	6	4	4	4	VARIES	2 - 8 - ½								
		11 - 7	SETS				2 - 7									
		TO	OF				TO									
		18 - 10	31				6 - 2 - ¼									
5	P34	18 - 11	144	4	4	4	6 - 3	2 - 8 - ½								
4	P35	5 - 8	38	18	1	3	4 - 6									

PIER NO. 48 (CONT.)

MARK SIZE	MARK DES	LENGTH FT IN	NO BARS	TYP BAR	STY A	STY G	B FT IN FR	C FT IN FR	D FT IN FR	E FT IN FR	F FT IN FR	H FT IN FR	J FT IN	K FT IN	N	O
4	P40	2 - 3	192	18	1	3	1 - 0 - ¾									
4	P41A	2 - 0	80	1			2 - 0									
4	P48	6 - 8	96	11			2 - 0	2 - 4		2 - 4						
8	P50	4 - 10	192	17	1		3 - 9									

NOTE:
FOR STANDARD BAR BENDING DETAILS, SEE SHEET A-6. REINFORCING STEEL SHALL BE ASTM, A615, GRADE 60.

FINLEY McNARY/JANSSEN SPAANS
a Joint Venture

Finley McNary Engineers, Inc
1391 Timberlane Road Suite 200
Tallahassee, Florida 32312-1721

Janssen & Spaans Engineers, Inc.
2825 East 56th Street
Indianapolis, Indiana 46220

REVISIONS

DATE	BY	DESCRIPTION	DATE	BY	DESCRIPTION	DATE	BY	DESCRIPTION	DATE	BY

	NAME	DATE
DR. BY	J.L.S.	1/96
CHK. BY	C.W.N.	1/96
SUPV.	H.D.R.	1/96

FINLEY McNARY/JANSSEN SPAANS

BOARD OF COUNTY COMMISSIONERS
LEE, COUNTY, FLORIDA
DEPARTMENT OF TRANSPORTATION

MIDPOINT BRIDGE
REINFORCING BAR LIST (19)

PIER NO. 49

MARK SIZE	MARK DES	LENGTH FT-IN	NO BARS	TYP BAR	STY A	STY G	B FT-IN-FR	C FT-IN-FR	D FT-IN-FR	E FT-IN-FR	F FT-IN-FR	H FT-IN-FR	J FT-IN	K FT-IN	N	O
10	P1	41 - 0	66	18	3	3	37 - 4									
10	P2	VARIES 33 - 4 TO 40 - 6	2 SETS OF 9	18	3	3	VARIES 29 - 8 TO 36 - 9 - ¼									
10	P3	VARIES 25 - 4 TO 28 - 8	2 SETS OF 5	18	3	3	VARIES 21 - 8 TO 24 - 11 - ½									
10	P4	VARIES 51 - 11 TO 56 - 9	2 SETS OF 4	18	3	3	VARIES 48 - 2 - ¼ TO 53 - 1									
10	P5	VARIES 34 - 11 TO 38 - 0	4 SETS OF 5	17	3		VARIES 33 - 1 TO 36 - 2									
10	P6	38 - 10	40	17	3		37 - 0									
6	P1A	VARIES 31 - 4 TO 39 - 9	2 SETS OF 14	1			VARIES 31 - 4 TO 39 - 9									
6	P1B	VARIES 21 - 4 TO 29 - 9	2 SETS OF 14	1			VARIES 21 - 4 TO 29 - 9									
6	P8A	40 - 2	40	1			40 - 2									
6	P8B	30 - 2	40	1			30 - 2									
6	P9	VARIES 23 - 8 TO 38 - 5	2 SETS OF 13	18	3	3	VARIES 21 - 8 TO 36 - 4 - 7/16									
6	P10	39 - 4	64	18	3	3	37 - 4									
10	P11A	VARIES 41 - 4 TO 50 - 5	2 SETS OF 15	17	3		VARIES 39 - 6 TO 48 - 7									
10	P11B	VARIES 19 - 0 TO 28 - 1	2 SETS OF 15	17	3		VARIES 17 - 2 TO 26 - 3									
10	P12A	50 - 10	40	17	3		49 - 0									
10	P12B	28 - 6	40	17	3		26 - 8									
6	P13A	21 - 2	16	1			21 - 2									
6	P13B	47 - 9	16	1			47 - 9									
6	P13C	18 - 9	32	13			12 - 6 - ¼	3 - 1	3 - 1						51#	40#
6	P14	VARIES 22 - 11 TO 36 - 6	2 SETS OF 12	1			VARIES 22 - 10 - ¾ TO 36 - 6									
6	P15	37 - 4	64	1			37 - 4									
4	P16	6 - 4	140	1			6 - 4									
4	P17	6 - 4	180	1			6 - 4									
11	P21A	13 - 11	34	17	3		11 - 11									
11	P21B	11 - 11	34	17	3		9 - 11									
11	P22A	27 - 3	34	1			27 - 2 - 7/8									
11	P22B	25 - 3	34	1			25 - 2 - 7/8									
4	P24	18 - 6	104	4	4	4	4 - 0	4 - 10 - ¼								
7	P25	81 - 6	6	41			44 - 9	36 - 9					4 - 0		1	
7	P26	74 - 10	2	41			41 - 5	33 - 5					4 - 0		1	
7	P27	69 - 0	2	41			38 - 6	30 - 6					4 - 0		1	
7	P28	63 - 2	2	41			35 - 7	27 - 7					4 - 0		1	
11	P29	28 - 9	30	1			28 - 9									

PIER NO. 49 CONT.

MARK SIZE	MARK DES	LENGTH FT-IN	NO BARS	TYP BAR	STY A	STY G	B FT-IN-FR	C FT-IN-FR	D FT-IN-FR	E FT-IN-FR	F FT-IN-FR	H FT-IN-FR	J FT-IN	K FT-IN	N	O
11	P30	81 - 0	15	41			44 - 3	36 - 9					3 - 6		1	
11	P31	46 - 0	22	1			46 - 0									
4	P32	18 - 1	22	12			13 - 4	4 - 9								16
5	P33	VARIES 11 - 1 TO 18 - 10	6 SETS OF 31	4	4	4	VARIES 2 - 1 TO 6 - 2 - ¼	2 - 8 - ½								
5	P34	18 - 11	144	4	4	4	6 - 3	2 - 8 - ½								
4	P35	5 - 8	38	18	1	3	4 - 6									
6	P01	5 - 11	64	23			2 - 1	0 - 2 - ¼	2 - 1							
4	P01	1 - 8	96	1			1 - 8									
4	P41A	2 - 0	80	1			2 - 0									
4	P41B	6 - 6	96	11			2 - 0	2 - 3	2 - 3							
8	P50	4 - 10	192	17	1		3 - 9									

NOTE:
FOR STANDARD BAR BENDING DETAILS, SEE SHEET A-6. REINFORCING STEEL SHALL BE ASTM. A615, GRADE 60.

6 MAY 96

FINLEY McNARY/JANSSEN SPAANS
a Joint Venture

Finley McNary Engineers, Inc
1391 Timberlane Road Suite 200
Tallahassee, Florida 32312-1721

Janssen & Spaans Engineers, Inc.
2825 East 56th Street
Indianapolis, Indiana 46220

REVISIONS

DATE	BY	DESCRIPTION	DATE	BY	DESCRIPTION	DATE	BY	DESCRIPTION	DATE	BY

	NAME	DATE
DR. BY	J.L.S.	1/96
CHK. BY	C.W.N.	1/96
SUPV.	H.D.R.	1/96

FINLEY McNARY/JANSSEN SPAANS

BOARD OF COUNTY COMMISSIONERS
LEE, COUNTY, FLORIDA
DEPARTMENT OF TRANSPORTATION

MIDPOINT BRIDGE
REINFORCING BAR LIST (20)

PIER NO. 50

MARK SIZE	MARK DES	LENGTH FT IN	NO BARS	TYP BAR	STY A	STY G	B FT IN FR	C FT IN FR	D FT IN FR	E FT IN FR	F FT IN FR	H FT IN FR	J FT IN	K FT IN	N	O
10	P1	41 - 0	66	18	3	3	37 - 4									
10	P2	VARIES 33 - 4 TO 40 - 6	2 SETS OF 9	18	3	3	VARIES 29 - 8 TO 36 - 9 - ¼									
10	P3	VARIES 25 - 4 TO 28 - 8	2 SETS OF 5	18	3	3	VARIES 21 - 8 TO 24 - 11 - ½									
10	P4	VARIES 51 - 11 TO 56 - 9	2 SETS OF 4	18	3	3	VARIES 48 - 2 - ¾ TO 53 - 1									
10	P5	VARIES 34 - 11 TO 38 - 0	4 SETS OF 5	17	3		VARIES 33 - 1 TO 36 - 2									
10	P6	38 - 10	40	17	3		37 - 0									
6	P7A	VARIES 31 - 4 TO 39 - 9	2 SETS OF 14	1			VARIES 31 - 4 TO 39 - 9									
6	P7B	VARIES 21 - 4 TO 29 - 9	2 SETS OF 14	1			VARIES 21 - 4 TO 29 - 9									
6	P8A	40 - 2	40	1			40 - 2									
6	P8B	30 - 2	40	1			30 - 2									
6	P9	VARIES 23 - 8 TO 38 - 5	2 SETS OF 13	18	3	3	VARIES 21 - 8 TO 36 - 4 - 3/16									
6	P10	39 - 4	64	18	3	3	37 - 4									
10	P11A	VARIES 41 - 4 TO 50 - 5	2 SETS OF 15	17	3		VARIES 39 - 6 TO 48 - 7									
10	P11B	VARIES 19 - 0 TO 28 - 1	2 SETS OF 15	17	3		VARIES 17 - 2 TO 26 - 3									
10	P12A	50 - 10	40	17	3		49 - 0									
10	P12B	28 - 6	40	17	3		26 - 8									
6	P13A	21 - 2	16	1			21 - 2									
6	P13B	47 - 9	16	1			47 - 9									
6	P13C	18 - 9	32	13			12 - 6 - 1/4	3 - 1	3 - 1					51#	40#	
6	P14	VARIES 22 - 11 TO 36 - 6	2 SETS OF 12	1			VARIES 22 - 10 - ¾ TO 36 - 6									
6	P15	37 - 4	64	1			37 - 4									
4	P16	6 - 4	140	1			6 - 4									
4	P17	6 - 4	180	1			6 - 4									
11	P21A	13 - 11	34	17	3		11 - 11									
11	P21B	11 - 11	34	17	3		9 - 11									
11	P22A	23 - 2	34	1	1		23 - 2									
11	P22B	21 - 2	34	1	1		21 - 2									
4	P24	18 - 6	88	4	4	4	4 - 0	4 - 10 - 1/4								
7	P25	81 - 6	6	41			44 - 9	36 - 9					4 - 0		1	
7	P26	74 - 10	2	41			41 - 5	33 - 5					4 - 0		1	
7	P27	69 - 0	2	41			38 - 6	30 - 6					4 - 0		1	
7	P28	63 - 2	2	41			35 - 7	27 - 7					4 - 0		1	

PIER NO. 50 CONT.

MARK SIZE	MARK DES	LENGTH FT IN	NO BARS	TYP BAR	STY A	STY G	B FT IN FR	C FT IN FR	D FT IN FR	E FT IN FR	F FT IN FR	H FT IN FR	J FT IN	K FT IN	N	O
11	P29	28 - 9	30	1			28 - 9									
11	P30	81 - 0	15	41			44 - 3	36 - 9					3 - 6		1	
11	P31	46 - 0	22	1			46 - 0									
4	P32	18 - 1	22	12			13 - 4	4 - 9								16
5	P33	VARIES 11 - 7 TO 18 - 10	6 SETS OF 31	4	4	4	VARIES 2 - 7 TO 6 - 2 - 1/4	2 - 8 - ½								
5	P34	18 - 11	144	4	4	4	6 - 3	2 - 8 - ½								
4	P35	5 - 8	38	18	1	3	4 - 6									
4	P47A	2 - 0	80	1			2 - 0									
4	P48	6 - 0	96	11			2 - 0	2 - 0	2 - 0							
8	P50	4 - 10	192	17	1		3 - 9									

NOTE:
FOR STANDARD BAR BENDING DETAILS, SEE SHEET A-6. REINFORCING STEEL SHALL BE ASTM, A615, GRADE 60.

6 MAY 96

FINLEY McNARY/JANSSEN SPAANS
a Joint Venture

Finley McNary Engineers, Inc
1391 Timberlane Road Suite 200
Tallahassee, Florida 32312-1721

Janssen & Spaans Engineers, Inc.
2825 East 56th Street
Indianapolis, Indiana 46220

REVISIONS

DATE	BY	DESCRIPTION	DATE	BY	DESCRIPTION	DATE	BY	DESCRIPTION	DATE	BY

	NAME	DATE
DR. BY	J.L.S.	1/96
CHK. BY	C.W.K.	1/96
SUPV.	H.D.R.	1/96

FINLEY McNARY/JANSSEN SPAANS

BOARD OF COUNTY COMMISSIONERS
LEE, COUNTY, FLORIDA
DEPARTMENT OF TRANSPORTATION

MIDPOINT BRIDGE
REINFORCING BAR LIST (21)

PIER NO. 51

MARK SIZE	MARK DES	LENGTH FT IN	NO BARS	TYP BAR	STY A	STY G	B FT IN FR	C FT IN FR	D FT IN FR	E FT IN FR	F FT IN FR	H FT IN FR	J FT IN	K FT IN	N	O
10	P1	41 - 0	64	18	3	3	37 - 4									
10	P2	VARIES	2	18	3	3	VARIES									
		33 - 7	SETS				29 - 11									
		TO	OF				TO									
		40 - 4	8				36 - 7 ¼									
10	P3	VARIES	2	18	3	3	VARIES									
		25 - 4	SETS				21 - 8									
		TO	OF				TO									
		28 - 3	4				24 - 6 - ½									
10	P4	VARIES	2	18	3	3	VARIES									
		51 - 10	SETS				48 - 1 - ¼									
		TO	OF				TO									
		57 - 0	5				53 - 3 - ¼									
10	P5A	VARIES	2	17	3		VARIES									
		40 - 10	SETS				39 - 0									
		TO	OF				TO									
		44 - 2	6				42 - 4									
10	P5B	VARIES	2	17	3		VARIES									
		28 - 10	SETS				27 - 0									
		TO	OF				TO									
		32 - 2	6				30 - 4									
10	P6A	44 - 6	23	17	3		42 - 8									
10	P6B	32 - 6	23	17	3		30 - 8									
6	P7A	VARIES	2	1			VARIES									
		36 - 11	SETS				36 - 11									
		TO	OF				TO									
		45 - 3	12				45 - 3									
6	P7B	VARIES	2	1			VARIES									
		15 - 11	SETS				15 - 11									
		TO	OF				TO									
		24 - 3	12				24 - 3									
6	P8A	45 - 8	34	1			45 - 8									
6	P8B	24 - 8	34	1			24 - 8									
6	P9	VARIES	2	18	3	3	VARIES									
		25 - 4	SETS				21 - 8									
		TO	OF				TO									
		40 - 3	10				36 - 7									
6	P10	39 - 4	48	18	3	3	37 - 4									
10	P11A	VARIES	2	17	3		VARIES									
		41 - 4	SETS				39 - 6									
		TO	OF				TO									
		50 - 5	13				48 - 7									
10	P11B	VARIES	2	17	3		VARIES									
		19 - 0	SETS				17 - 2									
		TO	OF				TO									
		28 - 1	13				26 - 3									
10	P12A	50 - 10	34	17	3		49 - 0									
10	P12B	28 - 6	34	17	3		26 - 8									
6	P13A	21 - 2	16	1			21 - 2									
6	P13B	47 - 9	16	1			47 - 9									
6	P13C	18 - 9	32	13			12 - 6 - ¼	3 - 1	3 - 1						51X	40X
6	P14	VARIES	2	1			VARIES									
		23 - 4	SETS				23 - 3 - ¾									
		TO	OF				TO									
		36 - 7	9				36 - 7									
6	P15	37 - 4	48	1			37 - 4									
4	P16	6 - 4	120	1			6 - 4									
4	P17	6 - 4	136	1			6 - 4									
11	P21A	13 - 11	34	17	3		11 - 11									
11	P21B	11 - 11	34	17	3		9 - 11									
11	P22A	18 - 7	34	1			18 - 7									
11	P22B	16 - 7	34	1			16 - 7									
4	P24	18 - 6	68	4	4	4	4 - 0	4 - 10 - ¼					4 - 0		1	
7	P25	81 - 6	6	41			44 - 9	36 - 9					4 - 0		1	
7	P26	74 - 10	2	41			41 - 5	33 - 5					4 - 0		1	
7	P27	69 - 0	2	41			38 - 6	30 - 6					4 - 0		1	
7	P28	63 - 2	2	41			35 - 7	27 - 7					4 - 0		1	
11	P29	28 - 9	30	1			28 - 9									
11	P30	81 - 0	15	41			44 - 3	36 - 9					3 - 6		1	
11	P31	46 - 0	22	1			46 - 0									
4	P32	18 - 1	22	12			13 - 4	4 - 9								16
5	P33	VARIES	6	4	4	4	VARIES	2 - 8 - ½								
		11 - 7	SETS				2 - 7									
		TO	OF				TO									
		18 - 10	31				6 - 2 - ¼									
5	P34	18 - 11	144	4	4	4	6 - 3	2 - 8 - ½								
4	P35	5 - 8	38	18	1	3	4 - 6									

PIER NO. 51 (CONT.)

MARK SIZE	MARK DES	LENGTH FT IN	NO BARS	TYP BAR	STY A	STY G	B FT IN FR	C FT IN FR	D FT IN FR	E FT IN FR	F FT IN FR	H FT IN FR	J FT IN	K FT IN	N	O
4	P40	2 - 5	432	18	1	3	1 - 3									
4	P41A	2 - 0	80	1			2 - 0									
4	P41B	8 - 8	96	11			2 - 0	2 - 4	2 - 4							
8	P50	4 - 10	80	17	1		3 - 9									

NOTE:
FOR STANDARD BAR BENDING DETAILS, SEE SHEET A-6. REINFORCING STEEL SHALL BE ASTM, A615, GRADE 60.

6 MAY 96

FINLEY McNARY/JANSSEN SPAANS
a Joint Venture

Finley McNary Engineers, Inc
1391 Timberlane Road Suite 200
Tallahassee, Florida 32312-1721

Janssen & Spaans Engineers, Inc.
2825 East 56th Street
Indianapolis, Indiana 46220

REVISIONS

DATE	BY	DESCRIPTION	DATE	BY	DESCRIPTION	DATE	BY	DESCRIPTION	DATE	BY

	NAME	DATE
DR. BY	J.L.S.	1/96
CHK. BY	C.W.N.	1/96
SUPV.	H.D.R.	1/96

FINLEY McNARY/JANSSEN SPAANS

BOARD OF COUNTY COMMISSIONERS
LEE, COUNTY, FLORIDA
DEPARTMENT OF TRANSPORTATION

MIDPOINT BRIDGE
REINFORCING BAR LIST (22)

52

PIER NO. 52

MARK SIZE	MARK DES	LENGTH FT IN	NO BARS	TYP BAR	STY A	STY C	B FT IN FR	C FT IN FR	D FT IN FR	E FT IN FR	F FT IN FR	H FT IN FR	J FT IN	K FT IN	N	O
10	P1	41 - 0	64	18	3	3	37 - 4									
10	P2	VARIES	2	18	3	3	VARIES									
		33 - 7	SETS				29 - 11									
		TO	OF				TO									
		40 - 4	8				36 - 7 - ¼									
10	P3	VARIES	2	18	3	3	VARIES									
		25 - 4	SETS				21 - 8									
		10	OF				TO									
		28 - 3	4				24 - 6 - ½									
10	P4	VARIES	2	18	3	3	VARIES									
		51 - 10	SETS				48 - 1 - ¼									
		TO	OF				TO									
		54 - 0	5				53 - 3 - ¼									
10	P5A	VARIES	2	17	3		VARIES									
		40 - 10	SETS				39 - 0									
		10	OF				TO									
		44 - 2	6				42 - 4									
10	P5B	VARIES	2	17	3		VARIES									
		28 - 10	SETS				27 - 0									
		TO	OF				TO									
		32 - 2	6				30 - 4									
10	P6A	44 - 6	23	17	3		42 - 8									
10	P6B	32 - 6	23	17	3		30 - 8									
6	P7A	VARIES	2	1			VARIES									
		36 - 11	SETS				36 - 11									
		TO	OF				TO									
		45 - 3	12				45 - 3									
6	P7B	VARIES	2	1			VARIES									
		15 - 11	SETS				15 - 11									
		TO	OF				TO									
		24 - 3	12				24 - 3									
6	P8A	45 - 8	34	1			45 - 8									
6	P8B	24 - 8	34	1			24 - 8									
6	P9	VARIES	2	18	3	3	VARIES									
		25 - 4	SETS				21 - 8									
		TO	OF				TO									
		40 - 3	10				36 - 7									
6	P10	39 - 4	48	18	3	3	37 - 4									
10	P11A	VARIES	2	17	3		VARIES									
		41 - 4	SETS				39 - 6									
		TO	OF				TO									
		50 - 5	13				48 - 7									
10	P11B	VARIES	2	17	3		VARIES									
		19 - 0	SETS				17 - 2									
		TO	OF				TO									
		28 - 1	13				26 - 3									
10	P12A	50 - 10	34	17	3		49 - 0									
10	P12B	28 - 6	34	17	3		26 - 8									
6	P13A	21 - 2	16	1			21 - 2									
6	P13B	47 - 9	16	1			47 - 9									
6	P13C	18 - 9	32	13			12 - 6 - ¼	3 - 1	3 - 1						51X	40X
6	P14	VARIES	2	1			VARIES									
		23 - 4	SETS				23 - 3 - ¾									
		TO	OF				TO									
		36 - 7	9				36 - 7									
6	P15	37 - 4	48	1			37 - 4									
4	P16	6 - 4	120	1			6 - 4									
4	P17	6 - 4	136	1			6 - 4									
11	P21A	13 - 11	34	17	3		11 - 11									
11	P21B	11 - 11	34	17	3		9 - 11									
11	P22A	14 - 3	34	1			14 - 3									
11	P22B	12 - 3	34	1			12 - 3									
4	P24	18 - 6	52	4	4	4	4 - 0	4 - 10 - ¼								
7	P25	81 - 6	6	41			44 - 9	36 - 9					4 - 0		1	
7	P26	74 - 10	2	41			41 - 5	33 - 5					4 - 0		1	
7	P27	69 - 0	2	41			38 - 6	30 - 6					4 - 0		1	
7	P28	63 - 2	2	41			35 - 7	27 - 7					4 - 0		1	
11	P29	28 - 9	30	1			28 - 9									
11	P30	81 - 0	15	41			44 - 3	36 - 9					3 - 6		1	
11	P31	46 - 0	22	1			46 - 0									
4	P32	18 - 1	22	12			13 - 4	4 - 9								16
5	P33	VARIES	6	4	4	4	VARIES	2 - 8 - ½								
		11 - 7	SETS				2 - 7									
		TO	OF				TO									
		18 - 10	31				6 - 2 - ¼									
5	P34	18 - 11	144	4	4	4	6 - 3	2 - 8 - ½								
4	P35	5 - 8	38	18	1	3	4 - 6									

PIER NO. 52 (CONT.)

MARK SIZE	MARK DES	LENGTH FT IN	NO BARS	TYP BAR	STY A	STY C	B FT IN FR	C FT IN FR	D FT IN FR	E FT IN FR	F FT IN FR	H FT IN FR	J FT IN	K FT IN	N	O
6	P01	5 - 11	64	23			2 - 7	0 - 2 - ¼	2 - 7							
4	P01	1 - 8	96	1			1 - 8									
4	P41A	2 - 0	80	1			2 - 0									
4	P41B	6 - 8	96	11			2 - 0	2 - 4	2 - 4							
8	P50	4 - 10	80	17	1		3 - 9									

NOTE:
FOR STANDARD BAR BENDING DETAILS, SEE SHEET A-6. REINFORCING STEEL SHALL BE ASTM, A615, GRADE 60.

FINLEY McNARY/JANSSEN SPAANS
a Joint Venture

Finley McNary Engineers, Inc
1391 Timberlane Road Suite 200
Tallahassee, Florida 32312-1721

Janssen & Spaans Engineers, Inc.
2825 East 56th Street
Indianapolis, Indiana 46220

REVISIONS

DATE	BY	DESCRIPTION	DATE	BY	DESCRIPTION	DATE	BY	DESCRIPTION	DATE	BY

	NAME	DATE
DR. BY	J.L.S.	1/96
CHK. BY	C.W.N.	1/96
SUPV.	H.D.R.	1/96

FINLEY McNARY/JANSSEN SPAANS

BOARD OF COUNTY COMMISSIONERS
LEE, COUNTY, FLORIDA
DEPARTMENT OF TRANSPORTATION

MIDPOINT BRIDGE
REINFORCING BAR LIST (23)

BX1-151

PIER NO. 53

MARK SIZE	MARK DES	LENGTH FT-IN	NO BARS	TYP BAR	STY A	STY G	B FT-IN-FR	C FT-IN-FR	D FT-IN-FR	E FT-IN-FR	F FT-IN-FR	H FT-IN-FR	J FT-IN	K FT-IN	N	O
10	P1	41 - 0	64	18	3	3	37 - 4									
10	P2	VARIES	2	18	3	3	VARIES									
		33 - 7	SETS				29 - 11									
		TO	OF				TO									
		40 - 4	8				36 - 7 ¼									
10	P3	VARIES	2	18	3	3	VARIES									
		25 - 4	SETS				21 - 8									
		TO	OF				TO									
		28 - 3	4				24 - 6 1/2									
10	P4	VARIES	2	18	3	3	VARIES									
		51 - 10	SETS				48 - 1 ¼"									
		TO	OF				TO									
		54 - 0	5				53 - 3 ¼									
10	P5A	VARIES	2	17	3		VARIES									
		40 - 10	SETS				39 - 0									
		TO	OF				TO									
		44 - 2	6				42 - 4									
10	P5B	VARIES	2	17	3		VARIES									
		28 - 10	SETS				27 - 0									
		TO	OF				TO									
		32 - 2	6				30 - 4									
10	P6A	44 - 6	23	17	3		42 - 8									
10	P6B	32 - 6	23	17	3		30 - 8									
6	P7A	VARIES	2	1			VARIES									
		36 - 11	SETS				36 - 11									
		TO	OF				TO									
		45 - 3	12				45 - 3									
6	P7B	VARIES	2	1			VARIES									
		15 - 11	SETS				15 - 11									
		TO	OF				TO									
		24 - 3	12				24 - 3									
6	P8A	45 - 8	34	1			45 - 8									
6	P8B	24 - 8	34	1			24 - 8									
6	P9	VARIES	2	18	3	3	VARIES									
		25 - 4	SETS				21 - 8									
		TO	OF				TO									
		40 - 3	10				36 - 7									
6	P10	39 - 4	48	18	3	3	37 - 4									
10	P11A	VARIES	2	17	3		VARIES									
		41 - 4	SETS				39 - 6									
		TO	OF				TO									
		50 - 5	13				48 - 7									
10	P11B	VARIES	2	17	3		VARIES									
		19 - 0	SETS				17 - 2									
		TO	OF				TO									
		28 - 1	13				26 - 3									
10	P12A	50 - 10	34	17	3		49 - 0									
10	P12B	28 - 6	34	17	3		26 - 8									
6	P13A	21 - 2	16	1			21 - 2									
6	P13B	47 - 9	16	1			47 - 9									
6	P13C	18 - 9	32	13			12 - 6 ¼	3 - 1	3 - 1					51N	40N	
6	P14	VARIES	2	1			VARIES									
		23 - 4	SETS				23 - 3 ¾									
		TO	OF				TO									
		36 - 7	9				36 - 7									
6	P15	37 - 4	48	1			37 - 4									
4	P16	6 - 4	120	1			6 - 4									
4	P17	6 - 4	136	1			6 - 4									
11	P21A	13 - 11	34	17	3		11 - 11									
11	P21B	11 - 11	34	17	3		9 - 11									
11	P22A	9 - 11	34	1			9 - 11									
11	P22B	7 - 11	34	1			7 - 11									
4	P24	18 - 6	32	4	4	4	4 - 0	4 - 10 ¼"								
7	P25	81 - 6	6	41			44 - 9	36 - 9					4 - 0		1	
7	P26	74 - 10	2	41			41 - 5	33 - 5					4 - 0		1	
7	P27	69 - 0	2	41			38 - 6	30 - 6					4 - 0		1	
7	P28	63 - 2	2	41			35 - 7	27 - 7					4 - 0		1	
11	P29	28 - 9	30	1			28 - 9									
11	P30	81 - 0	15	41			44 - 3	36 - 9					3 - 6		1	
11	P31	46 - 0	22	1			46 - 0									
4	P32	18 - 1	22	12			13 - 4	4 - 9								16
5	P33	VARIES	6	4	4	4	VARIES	2 - 8 ½								
		11 - 7	SETS				2 - 7									
		TO	OF				TO									
		18 - 10	31				6 - 2 ¼									
5	P34	18 - 11	144	4	4	4	6 - 3	2 - 8 ½								
4	P35	5 - 8	38	18	1	3	4 - 6									

PIER NO. 53 (CONT.)

MARK SIZE	MARK DES	LENGTH FT-IN	NO BARS	TYP BAR	STY A	STY G	B FT-IN-FR	C FT-IN-FR	D FT-IN-FR	E FT-IN-FR	F FT-IN-FR	H FT-IN-FR	J FT-IN	K FT-IN	N	O
4	P47A	2 - 0	80	1			2 - 0									
4	P47B	6 - 8	96	11			2 - 0	2 - 4	2 - 4							
8	P50	4 - 10	80	17	1		3 - 9									

NOTE:
FOR STANDARD BAR BENDING DETAILS, SEE SHEET A-6. REINFORCING STEEL SHALL BE ASTM. A615, GRADE 60.

HDR 6 MAY 96

FINLEY McNARY/JANSSEN SPAANS
a Joint Venture

Finley McNary Engineers, Inc
1391 Timberlane Road Suite 200
Tallahassee, Florida 32312-1721

Janssen & Spaans Engineers, Inc.
2825 East 56th Street
Indianapolis, Indiana 46220

REVISIONS

DATE	BY	DESCRIPTION	DATE	BY	DESCRIPTION	DATE	BY	DESCRIPTION	DATE	BY

	NAME	DATE
DR. BY	J.L.S.	1/96
CHK. BY	C.W.N.	1/96
SUPV.	H.D.R.	1/96

FINLEY McNARY/JANSSEN SPAANS

BOARD OF COUNTY COMMISSIONERS
LEE, COUNTY, FLORIDA
DEPARTMENT OF TRANSPORTATION

MIDPOINT BRIDGE
REINFORCING BAR LIST (24)

PIER NO. 54

MARK SIZE	MARK DES	LENGTH FT IN	NO BARS	TYP BAR	STY A	STY G	B FT IN FR	C FT IN FR	D FT IN FR	E FT IN FR	F FT IN FR	H FT IN FR	J FT IN	K FT IN	#	@
10	P1	41 - 0	64	18	3	3	37 - 4									
10	P2	VARIES	2	18	3	3	VARIES									
		33 - 7	SETS				29 - 11									
		TO	OF				TO									
		40 - 4	8				36 - 7 ¼									
10	P3	VARIES	2	18	3	3	VARIES									
		25 - 4	SETS				21 - 8									
		TO	OF				TO									
		28 - 3	4				24 - 6 ½									
10	P4	VARIES	2	18	3	3	VARIES									
		51 - 10	SETS				48 - 1 3/4"									
		TO	OF				TO									
		57 - 0	5				53 - 3 ¼									
10	P5A	VARIES	2	17	3		VARIES									
		40 - 10	SETS				39 - 0									
		TO	OF				TO									
		44 - 2	6				42 - 4									
10	P5B	VARIES	2	17	3		VARIES									
		28 - 10	SETS				27 - 0									
		TO	OF				TO									
		32 - 2	6				30 - 4									
10	P6A	44 - 6	23	17	3		42 - 8									
10	P6B	32 - 6	23	17	3		30 - 8									
6	P7A	VARIES	2	1			VARIES									
		36 - 11	SETS				36 - 11									
		TO	OF				TO									
		45 - 3	12				45 - 3									
6	P7B	VARIES	2	1			VARIES									
		15 - 11	SETS				15 - 11									
		TO	OF				TO									
		24 - 3	12				24 - 3									
6	P8A	45 - 8	34	1			45 - 8									
6	P8B	24 - 8	34	1			24 - 8									
6	P9	VARIES	2	18	3	3	VARIES									
		25 - 4	SETS				21 - 8									
		TO	OF				TO									
		40 - 3	10				36 - 7									
6	P10	39 - 4	48	18	3	3	37 - 4									
10	P11A	VARIES	2	17	3		VARIES									
		41 - 4	SETS				39 - 6									
		TO	OF				TO									
		50 - 5	13				48 - 7									
10	P11B	VARIES	2	17	3		VARIES									
		19 - 0	SETS				17 - 2									
		TO	OF				TO									
		28 - 1	13				26 - 3									
10	P12A	50 - 10	34	17	3		49 - 0									
10	P12B	28 - 6	34	17	3		26 - 8									
6	P13A	21 - 2	16	1			21 - 2									
6	P13B	47 - 9	16	1			47 - 9									
6	P13C	18 - 9	32	13			12 - 6 ¼	3 - 1	3 - 1						51N	40N
6	P14	VARIES	2	1			VARIES									
		23 - 4	SETS				23 - 3 ¾									
		TO	OF				TO									
		36 - 7	9				36 - 7									
6	P15	37 - 4	48	1			37 - 4									
4	P16	6 - 4	120	1			6 - 4									
4	P17	6 - 4	136	1			6 - 4									
11	P21	17 - 6	68	10	3		15 - 6									
4	P24	18 - 6	16	4	4	4	4 - 0	4 - 10 ¼"								
7	P25	81 - 6	6	41			44 - 9	36 - 9					4 - 0		1	
7	P26	74 - 10	2	41			41 - 5	33 - 5					4 - 0		1	
7	P27	69 - 0	2	41			38 - 6	30 - 6					4 - 0		1	
7	P28	63 - 2	2	41			35 - 7	27 - 7					4 - 0		1	
11	P29	28 - 9	30	1			28 - 9									
11	P30	81 - 0	15	41			44 - 3	36 - 9					3 - 6		1	
11	P31	46 - 0	22	1			46 - 0									
4	P32	18 - 1	22	12			13 - 4	4 - 9								16
5	P33	VARIES	6	4	4	4	VARIES	2 - 8 ½								
		11 - 7	SETS				2 - 7									
		TO	OF				TO									
		18 - 10	31				6 - 2 ¼									
5	P34	18 - 11	144	4	4	4	6 - 3	2 - 8 ½								
4	P35	5 - 8	38	18	1	3	4 - 6									

PIER NO. 54 (CONT.)

MARK SIZE	MARK DES	LENGTH FT IN	NO BARS	TYP BAR	STY A	STY C	B FT IN FR	C FT IN FR	D FT IN FR	E FT IN FR	F FT IN FR	H FT IN FR	J FT IN	K FT IN	#	@
4	P40	2 - 5	432	18	1	3	1 - 3									
4	P47A	2 - 0	80	1			2 - 0									
4	P48	6 - 8	96	11			2 - 0	2 - 4	2 - 4							
8	P50	4 - 10	80	17	1		3 - 9									

NOTE:
FOR STANDARD BAR BENDING DETAILS, SEE SHEET A-6. REINFORCING STEEL SHALL BE ASTM. A615, GRADE 60.

10 MAY 96

FINLEY McNARY/JANSSEN SPAANS
a Joint Venture

Finley McNary Engineers, Inc
1391 Timberlane Road Suite 200
Tallahassee, Florida 32312-1721

Janssen & Spaans Engineers, Inc.
2825 East 56th Street
Indianapolis, Indiana 46220

REVISIONS

DATE	BY	DESCRIPTION	DATE	BY	DESCRIPTION	DATE	BY	DESCRIPTION	DATE	BY

	NAME	DATE
DR. BY	J.L.S.	1/96
CHK. BY	C.W.N.	1/96
SUPV.	H.D.R.	1/96

FINLEY McNARY/JANSSEN SPAANS

BOARD OF COUNTY COMMISSIONERS
LEE COUNTY, FLORIDA
DEPARTMENT OF TRANSPORTATION

MIDPOINT BRIDGE
REINFORCING BAR LIST (25)

MARK SIZE	MARK DES	LENGTH FT IN	NO BARS	TYP BAR	STY A	STY G	B FT IN FR	C FT IN FR	D FT IN FR	E FT IN FR	F FT IN FR	H FT IN FR	J FT IN	K FT IN	N	B
PIER 55																
10	P1	41 - 0	64	18	3	3	37 - 4									
10	P2	VARIES	2	18	3	3	VARIES									
		33 - 7	SETS				29 - 11									
		TO	OF				TO									
		40 - 4	8				36 - 7¾									
10	P3	VARIES	2	18	3	3	VARIES									
		25 - 4	SETS				21 - 8									
		TO	OF				TO									
		28 - 3	4				24 - 6 - ½									
10	P4	VARIES	2	18	3	3	VARIES									
		51 - 10	SETS				48 - 1 - ¾									
		TO	OF				TO									
		57 - 0	5				53 - 3 - ¾									
10	P5A	VARIES	2	17	3		VARIES									
		40 - 10	SETS				39 - 0									
		TO	OF				TO									
		44 - 2	6				42 - 4									
10	P5B	VARIES	2	17	3		VARIES									
		28 - 10	SETS				27 - 0									
		TO	OF				TO									
		32 - 2	6				30 - 4									
10	P6A	44 - 6	23	17	3		42 - 8									
10	P6B	32 - 6	23	17	3		30 - 8									
6	P7A	VARIES	2	1			VARIES									
		36 - 11	SETS				36 - 11									
		TO	OF				TO									
		45 - 3	12				45 - 3									
6	P7B	VARIES	2	1			VARIES									
		15 - 11	SETS				15 - 11									
		TO	OF				TO									
		24 - 3	12				24 - 3									
6	P8A	45 - 8	34	1			45 - 8									
6	P8B	24 - 8	34	1			24 - 8									
6	P9	VARIES	2	18	3	3	VARIES									
		25 - 4	SETS				21 - 8									
		TO	OF				TO									
		40 - 3	10				36 - 7									
6	P10	39 - 4	48	18	3	3	37 - 4									
10	P11A	VARIES	2	17	3		VARIES									
		41 - 4	SETS				39 - 6									
		TO	OF				TO									
		50 - 5	13				48 - 7									
10	P11B	VARIES	2	17	3		VARIES									
		19 - 0	SETS				17 - 2									
		TO	OF				TO									
		28 - 1	13				26 - 3									
10	P12A	50 - 10	34	17	3		49 - 0									
10	P12B	28 - 6	34	17	3		26 - 8									
6	P13A	21 - 2	16	1			21 - 2									
6	P13B	47 - 9	16	1			47 - 9									
6	P13C	18 - 9	32	13			12 - 6¼	3 - 1	3 - 1						51#	40#
6	P14	VARIES	2	1			VARIES									
		23 - 4	SETS				23 - 3 - ¾									
		TO	OF				TO									
		36 - 7	9				36 - 7									
6	P15	37 - 4	48	1			37 - 4									
4	P16	6 - 4	120	1			6 - 4									
4	P17	6 - 4	136	1			6 - 4									
5	P18	10 - 2	51	11			4 - 6	2 - 10	2 - 10							
4	P19	79 - 11	6	41			43 - 8	36 - 3					2 - 5		1	
4	P20	9 - 3	79	11			2 - 0	3 - 7 - ¾	3 - 7 - ¾							
5	P21	11 - 9	106	10			10 - 3	1 - 6								
5	P22	VARIES	4	4	4	4	VARIES	2 - 10								
		11 - 10	SETS				2 - 7									
		TO	OF				TO									
		19 - 2	23				6 - 3									
4	P23	5 - 8	26	18	1	3	4 - 6									
4	P25	79 - 11	6	41			43 - 8	36 - 3					2 - 5		1	
4	P26	73 - 5	2	41			40 - 5	33 - 0					2 - 5		1	
4	P27	66 - 7	2	41			37 - 0	29 - 7					2 - 5		1	
4	P28	59 - 7	2	41			33 - 6	26 - 1					2 - 5		1	
4	P29	53 - 11	4	41			30 - 2	23 - 9					2 - 5		1	
11	P30	79 - 10	6	41			39 - 11	39 - 11					2 - 4		1	
11	P31	20 - 9	37	1			20 - 9									
4	P32	15 - 3	12	17			13 - 3	2 - 0								16

MARK SIZE	MARK DES	LENGTH FT IN	NO BARS	TYP BAR	STY A	STY G	B FT IN FR	C FT IN FR	D FT IN FR	E FT IN FR	F FT IN FR	H FT IN FR	J FT IN	K FT IN	N	B
PIER 55 (CONT.)																
6	P01	5 - 11	32	23			2 - 7	0 - 2 - ¼	2 - 7							
4	P01	1 - 8	48	1			1 - 8									
4	P44	6 - 11	32	11			0 - 6 - ¾	3 - 2	3 - 2							
4	P45	6 - 6	8	1			6 - 6									
4	P47	2 - 3	45	1			2 - 3									
4	P47A	2 - 0	40	1			2 - 0									
4	P48	5 - 10	102	11			1 - 6	2 - 2	2 - 2							
8	P50	4 - 10	80	17	1		3 - 9									

NOTE:
FOR STANDARD BAR BENDING DETAILS, SEE SHEET A-6. REINFORCING STEEL SHALL BE ASTM. A615, GRADE 60.

FINLEY McNARY/JANSSEN SPAANS
a Joint Venture

Finley McNary Engineers, Inc
1391 Timberlane Road Suite 200
Tallahassee, Florida 32312-1721

Janssen & Spaans Engineers, Inc.
2825 East 56th Street
Indianapolis, Indiana 46220

REVISIONS

DATE	BY	DESCRIPTION	DATE	BY	DESCRIPTION	DATE	BY	DESCRIPTION	DATE	BY

	NAME	DATE
DR. BY	J.L.S.	1/96
CHK. BY	C.W.H.	1/96
SUPV.	H.D.R.	1/96

FINLEY McNARY/JANSSEN SPAANS

BOARD OF COUNTY COMMISSIONERS
LEE, COUNTY, FLORIDA
DEPARTMENT OF TRANSPORTATION

MIDPOINT BRIDGE
REINFORCMENT BAR LIST (26)

PROJECT NO.	SHEET NO.
5896	C-142

BX1-154

MARK SIZE	MARK DES	LENGTH FT	LENGTH IN	NO BARS	TYP BAR	STY A	STY G	B FT	B IN	B FR	C FT	C IN	C FR	D FT	D IN	D FR	E FT	E IN	E FR	F FT	F IN	F FR	H FT	H IN	H FR	J FT	J IN	K FT	K IN	N	G
PIER 56																															
8	P1	20	4	88	11			14	4		3	0		3	0																
4	P3	20	4	60	11			14	4		3	0		3	0																
4	P4	13	3	42	4	4	4	3	3		3	0																			
11	P5A	15	10	20	10			13	10		2	0																			
11	P5B	16	5	20	10			14	5		2	0																			
11	P6	85	2	10	41			48	4		36	10														7	6			1	
11	P7	27	10	20	1			27	10																						
7	P8	81	8	4	41			44	10		36	10														4	0			1	
7	P9	78	0	2	41			43	0		35	0														4	0			1	
7	P10	72	4	2	41			40	2		32	2														4	0			1	
7	P11	66	9	2	41			37	5		29	4														4	0			1	
7	P12	61	2	2	41			34	7		26	7														4	0			1	
4	P13	18	1	14	12			14	3		3	10																			16"
5	P14	14	4	40	1			14	4																						
5	P15	14	4	32	1			14	4																						
11	P17	48	1	14	1			48	1																						
5	P40	VARIES 17 - 11 TO 10 - 1		4 SETS OF 25	4	4	4	VARIES 6 - 0 TO 2 - 1			2	5	1/4																		
5	P41	17	11	88	4	4	4	6	0		2	5	1/4																		
4	P42	4	8	37	18	1	3	3	6																						
4	P44	6	4	64	11			0	8		2	10		2	10																
4	P45	6	6	16	1			6	6																						
4	P47	2	3	72	1			2	3																						
4	P48	4	10	108	11			1	6		1	8		1	8																
PIER 57																															
8	P1	20	4	88	11			14	4		3	0		3	0																
4	P3	20	4	60	11			14	4		3	0		3	0																
4	P4	13	3	38	4	4	4	3	3		3	0																			
11	P5A	15	0	20	10			13	0		2	0																			
11	P5B	16	2	20	10			14	2		2	0																			
11	P6	85	2	10	41			48	4		36	10														7	6			1	
11	P7	27	10	20	1			27	10																						
7	P8	81	8	4	41			44	10		36	10														4	0			1	
7	P9	78	0	2	41			43	0		35	0														4	0			1	
7	P10	72	4	2	41			40	2		32	2														4	0			1	
7	P11	66	9	2	41			37	5		29	4														4	0			1	
7	P12	61	2	2	41			34	7		26	7														4	0			1	
4	P13	18	1	14	12			14	3		3	10																			16"
5	P14	14	4	40	1			14	4																						
5	P15	14	4	32	1			14	4																						
11	P17	48	1	14	1			48	1																						
5	P40	VARIES 17 - 11 TO 10 - 1		4 SETS OF 25	4	4	4	VARIES 6 - 0 TO 2 - 1			2	5	1/4																		
5	P41	17	11	88	4	4	4	6	0		2	5	1/4																		
4	P42	4	8	37	18	1	3	3	6																						
5	P43	6	5	192	11			0	9		2	10		2	10																
4	P45	6	6	32	1			6	6																						
4	P46	1	11	144	18	1	3	0	9																						
4	P47	2	3	72	1			2	3																						
4	P48	4	4	108	11			1	6		1	5		1	5																

MARK SIZE	MARK DES	LENGTH FT	LENGTH IN	NO BARS	TYP BAR	STY A	STY G	B FT	B IN	B FR	C FT	C IN	C FR	D FT	D IN	D FR	E FT	E IN	E FR	F FT	F IN	F FR	H FT	H IN	H FR	J FT	J IN	K FT	K IN	N	G
PIER 58																															
8	P1	20	4	88	11			14	4		3	0		3	0																
4	P3	20	4	60	11			14	4		3	0		3	0																
4	P4	13	3	34	4	4	4	3	3		3	0																			
11	P5A	14	6	20	10			12	6		2	0																			
11	P5B	16	3	20	10			14	3		2	0																			
11	P6	85	2	10	41			48	4		36	10														7	6			1	
11	P7	27	10	20	1			27	10																						
7	P8	81	8	4	41			44	10		36	10														4	0			1	
7	P9	78	0	2	41			43	0		35	0														4	0			1	
7	P10	72	4	2	41			40	2		32	2														4	0			1	
7	P11	66	9	2	41			37	5		29	4														4	0			1	
7	P12	61	2	2	41			34	7		26	7														4	0			1	
4	P13	18	1	14	12			14	3		3	10																			16"
5	P14	14	4	40	1			14	4																						
5	P15	14	4	32	1			14	4																						
11	P17	48	1	14	1			48	1																						
5	P40	VARIES 17 - 11 TO 10 - 1		4 SETS OF 25	4	4	4	VARIES 6 - 0 TO 2 - 1			2	5	1/4																		
5	P41	17	11	88	4	4	4	6	0		2	5	1/4																		
4	P42	4	8	37	18	1	3	3	6																						
4	P44	6	4	64	11			0	8		2	10		2	10																
4	P45	6	6	16	1			6	6																						
4	P47	2	3	72	1			2	3																						
4	P48	4	4	108	11			1	6		1	5		1	5																
END BENT 64																															
5	E1	12	0	156	4	4	4	3	1		2	5																			
5	E2	11	11	11	5			2	5		4	6		2	3		0	4													
9	E3	87	3	6	41			32	6		54	9														6	7			1	
5	E4	85	11	4	41			30	5		52	9														2	5			1	
8	E5	84	6	3	41			56	6		28	0														3	9			1	
8	E6	15	6	18	18	3	3	12	10																						
8	E8	12	4	4	18	3	3	9	8																						
8	E9	4	11	4	18	3	3	2	3																						
5	E10	4	8	210	1			4	8																						
5	E11	3	5	218	1			3	5																						
4	E12	82	7	12	41			45	0		37	7														2	0			1	
6	E13	1	6	20	1			1	6																						
5	E14	5	7	8	1			5	7																						
5	E15	4	0	4	4	4	4	1	0		0	6																			
4	E16	0	10	10	1			0	10																						
4	E17	3	6	14	1			3	6																						
4	E18	4	6	8	1			4	6																						
4	E21	3	0	10	1			3	0																						
4	E22	4	10	10	1			4	10																						
4	E23	4	6	14	1			4	6																						
5	E24	7	3	4	13			0	5		4	8		2	2															84	90
5	E25	3	7	4	12			2	5		1	2																			36
4	E70	3	9	54	10			2	6		1	3																			
4	E71	2	3	36	1			2	3																						
5	E72	6	6	24	11			2	7		2	11		2	11																
4	E73	5	9	12	4	4	4	2	0		0	5	3/4																		

NOTE:
FOR STANDARD BAR BENDING DETAILS, SEE SHEET A-6. REINFORCING STEEL SHALL BE ASTM, A615, GRADE 60.

3-3-95

REVISIONS

DATE	BY	DESCRIPTION	DATE	BY	DESCRIPTION	DATE	BY	DESCRIPTION	DATE	BY	DESCRIPTION

	NAME	DATE
DR. BY	SG	7/94
CHK. BY	GCG	7/94

Greiner
Engineers, Architects and Planners

BOARD OF COUNTY COMMISSIONERS
LEE COUNTY, FLORIDA

MIDPOINT BRIDGE
REINFORCING BAR LIST (PT)

MARK SIZE	MARK DES	LENGTH FT IN	NO BARS	TYP BAR	STY A	STY G	B FT IN FR	C FT IN FR	D FT IN FR	E FT IN FR	F FT IN FR	H FT IN FR	J FT IN	K FT IN	N	O
SUPERSTRUCTURE UNIT A (SPANS 1,2 AND 3)																
5	S1	82 - 11	494	41			33 - 3	49 - 8					2 - 2		1	
4	S2	297 - 6	10	2			1 - 8	287 - 3	42 - 6						6	
4	S3A	296 - 11	13	2			1 - 8	286 - 8	42 - 5						6	
4	S3B	295 - 9	13	2			1 - 8	285 - 5	42 - 3						6	
4	S3C	294 - 7	13	2			1 - 8	284 - 1	42 - 1						6	
4	S3D	292 - 3	13	2			1 - 8	282 - 3	41 - 9						6	
4	S3E	291 - 11	13	2			1 - 8	281 - 5	41 - 11						6	
4	S3F	290 - 5	13	2			1 - 8	280 - 2	41 - 6						6	
4	S3G	289 - 4	13	2			1 - 8	278 - 10	41 - 4						6	
4	S3H	288 - 2	13	2			1 - 8	277 - 6	41 - 2						6	
4	S4	286 - 5	9	2			1 - 8	276 - 3	40 - 11						6	
4	S5	297 - 6	73	2			1 - 8	287 - 2	42 - 6						6	
4	S6	40 - 0	162	1			40 - 0									
5	S7	82 - 11	494	41			46 - 1	36 - 10					2 - 2		1	
6	D31	7 - 8	24	1			7 - 8									
4	D40	9 - 4	720	7			4 - 1	0 - 5	0 - 4 - ½	0 - 4 - ½						
5	D41	76 - 7	24	41			42 - 11	33 - 8					2 - 2		1	
7	D42	77 - 11	12	41			43 - 7	34 - 4					3 - 6		1	
4	D43	7 - 4	48	1			7 - 4									
4	D44	8 - 3	48	1			8 - 3									
4	D45	8 - 5	96	1			8 - 5									
5	D46	7 - 4	48	1			7 - 4									
5	D47	2 - 4	48	1			2 - 4									
4	D49	5 - 2	150	1			5 - 2									
SUPERSTRUCTURE UNIT B & C (SPANS 4 THRU 11)(2 REQUIRED)																
5	S1	82 - 11	658	41			33 - 3	49 - 8							1	
4	S2	399 - 8	10	2			1 - 8	383 - 0	36 - 4						10	
4	S3A	399 - 0	13	2			1 - 8	382 - 4	36 - 3 ¼						10	
4	S3B	397 - 3	13	2			1 - 8	380 - 7	36 - 1 ⅜						10	
4	S3C	396 - 0	13	2			1 - 8	379 - 4	36 - 0						10	
4	S3D	394 - 2	13	2			1 - 8	377 - 6	35 - 10						10	
4	S3E	392 - 4	13	2			1 - 8	375 - 8	35 - 8						10	
4	S3F	390 - 6	13	2			1 - 8	373 - 10	35 - 6						10	
4	S3G	388 - 8	13	2			1 - 8	372 - 0	35 - 4						10	
4	S3H	386 - 10	13	2			1 - 8	370 - 2	35 - 2						10	
4	S4	385 - 0	9	2			1 - 8	368 - 4	35 - 0						10	
4	S5	399 - 0	73	2			1 - 8	382 - 4	36 - 3 ¼						10	
4	S6	40 - 0	243	1			40 - 0									
5	S7	82 - 11	658	41			46 - 1	36 - 10					2 - 2		1	
6	D31	7 - 8	32	1			7 - 8									
4	D40	9 - 2	960	7			4 - 0	0 - 5	0 - 4 - ½	0 - 4 - ½						
5	D41	76 - 7	32	41			42 - 11	33 - 8					2 - 2		1	
7	D42	77 - 11	16	41			43 - 7	34 - 4					3 - 6		1	
4	D43	7 - 4	64	1			7 - 4									
4	D44	8 - 3	64	1			8 - 3									
4	D45	8 - 5	128	1			8 - 5									
5	D46	7 - 4	64	1			7 - 4									
5	D47	2 - 4	64	1			2 - 4									
4	D49	5 - 2	200	1			5 - 2									
SUPERSTRUCTURE UNIT D (SPANS 12 THRU 15)																
5	S1	82 - 11	646	41			33 - 3	49 - 8					2 - 2		1	
4	S2	392 - 10	9	2			1 - 8	376 - 2	35 - 9						10	
4	S3A	392 - 9	13	2			1 - 8	376 - 1	35 - 9						10	
4	S3B	392 - 7	13	2			1 - 8	375 - 11	35 - 9						10	
4	S3C	392 - 5	13	2			1 - 8	375 - 9	35 - 9						10	
4	S3D	392 - 2	13	2			1 - 8	375 - 6	35 - 8						10	
4	S3E	392 - 0	13	2			1 - 8	375 - 4	35 - 8						10	
4	S3F	391 - 10	13	2			1 - 8	375 - 2	35 - 8						10	
4	S3G	391 - 8	13	2			1 - 8	375 - 0	35 - 8						10	
4	S3H	391 - 6	13	2			1 - 8	374 - 10	35 - 8						10	
4	S4	391 - 4	9	2			1 - 8	374 - 8	35 - 7						10	
4	S5	392 - 10	13	2			1 - 8	376 - 2	35 - 9						10	
4	S6	40 - 0	240	1			40 - 0									
5	S7	82 - 11	646	41			46 - 1	36 - 10					2 - 2		1	
6	D31	7 - 8	32	1			7 - 8									
4	D40	9 - 2	960	7			4 - 0	0 - 5	0 - 4 - ½	0 - 4 - ½						
5	D41	76 - 7	32	41			42 - 11	33 - 8					2 - 2		1	
7	D42	77 - 11	16	41			43 - 7	34 - 4					3 - 6		1	
4	D43	7 - 4	64	1			7 - 4									
4	D44	8 - 3	64	1			8 - 3									
4	D45	8 - 5	128	1			8 - 5									
5	D46	7 - 4	64	1			7 - 4									
5	D47	2 - 4	64	1			2 - 4									
4	D49	5 - 2	200	1			5 - 2									

MARK SIZE	MARK DES	LENGTH FT IN	NO BARS	TYP BAR	STY A	STY G	B FT IN FR	C FT IN FR	D FT IN FR	E FT IN FR	F FT IN FR	H FT IN FR	J FT IN	K FT IN	N	O
SUPERSTRUCTURE UNITS E THRU G (SPANS 16 THRU 27)(3 REQUIRED)																
5	S1	82 - 11	644	41			33 - 3	49 - 8					2 - 2		1	
4	S2	392 - 0	9	2			1 - 8	375 - 4	35 - 7 - ⅜						10	
4	S3	392 - 0	104	2			1 - 8	375 - 4	35 - 7 - ⅜						10	
4	S4	392 - 0	9	2			1 - 8	375 - 4	35 - 7 - ⅜						10	
4	S5	392 - 0	13	2			1 - 8	375 - 4	35 - 7 - ⅜						10	
4	S6	40 - 0	240	1			40 - 0									
5	S7	82 - 11	644	41			46 - 1	36 - 10					2 - 2		1	
6	D31	7 - 8	32	1			7 - 8									
4	D40	9 - 4	960	7			4 - 1	0 - 5	0 - 4 - ½	0 - 4 - ½						
5	D41	76 - 7	32	41			42 - 11	33 - 8					2 - 2		1	
7	D42	77 - 11	16	41			43 - 7	34 - 4					3 - 6		1	
4	D43	7 - 4	64	1			7 - 4									
4	D44	8 - 3	64	1			8 - 3									
4	D45	8 - 5	128	1			8 - 5									
5	D46	7 - 4	64	1			7 - 4									
5	D47	2 - 4	64	1			2 - 4									
4	D49	5 - 2	200	1			5 - 2									
SUPERSTRUCTURE UNIT H (SPANS 28 THRU 31)																
5	S1	82 - 11	644	41			33 - 3	49 - 8					2 - 2		1	
4	S2	392 - 0	9	2			1 - 8	375 - 4	35 - 7 - ⅜						10	
4	S3	392 - 0	104	2			1 - 8	375 - 4	35 - 7 - ⅜						10	
4	S4	392 - 0	9	2			1 - 8	375 - 4	35 - 7 - ⅜						10	
4	S5	392 - 0	13	2			1 - 8	375 - 4	35 - 7 - ⅜						10	
4	S6	40 - 0	240	1			40 - 0									
5	S7	82 - 11	644	41			46 - 1	36 - 10					2 - 2		1	
7	D27	84 - 4	2	41			51 - 5	32 - 11					3 - 6		1	
6	D31	7 - 8	28	1			7 - 8									
4	D38	4 - 5	120	13			2 - 5	1 - 0	1 - 0						45	45
4	D39	6 - 9	240	11			0 - 5	3 - 2	3 - 2							
4	D40	9 - 4	840	7			4 - 1	0 - 5	0 - 4 - ½	0 - 4 - ½						
5	D41	76 - 7	32	41			42 - 11	33 - 8					2 - 2		1	
7	D42	77 - 11	16	41			43 - 7	34 - 4					3 - 6		1	
4	D43	7 - 4	12	1			7 - 4									
4	D44	8 - 3	64	1			8 - 3									
4	D45	8 - 5	128	1			8 - 5									
5	D46	7 - 4	64	1			7 - 4									
5	D47	2 - 4	64	1			2 - 4									
4	D49	5 - 2	200	1			5 - 2									
SUPERSTRUCTURE UNIT I, J, N & P (SPANS 32 THRU 37 AND 49 THRU 54)(4 REQUIRED)																
5	S1	82 - 11	652	41			33 - 3	49 - 8					2 - 2		1	
4	S2	450 - 7	8	2			1 - 8	433 - 11	41 - 0						10	
4	S3	450 - 7	72	2			1 - 8	433 - 11	41 - 0						10	
4	S4	450 - 7	8	2			1 - 8	433 - 11	41 - 0						10	
4	S5	450 - 7	73	2			1 - 8	433 - 11	41 - 0						10	
4	S6	40 - 0	160	1			40 - 0									
5	S7	82 - 11	652	41			46 - 1	36 - 10					2 - 2		1	
8	D01	37 - 6	24	1			37 - 6									
8	D02	41 - 5	48	1			41 - 5									
6	D01	13 - 5	252	45	8	8	6 - 6	0 - 7	4 - 11 - ½							
6	D02	12 - 3	84	45	8	8	5 - 11	0 - 7	4 - 4 - ½							
5	D01	36 - 9	72	1			36 - 9									
5	D02	9 - 3	210	1			9 - 3									
5	D03	8 - 0	42	1			8 - 0									
5	D04	16 - 6	36	46			0 - 10	7 - 2	1 - 0 - ½	7 - 2	0 - 10					
5	D05	8 - 7	12	47			0 - 10	7 - 2	0 - 10							
5	D06	3 - 0	48	1			3 - 0									
4	D01	14 - 11	462	48	4½	4½	6 - 6	0 - 7								

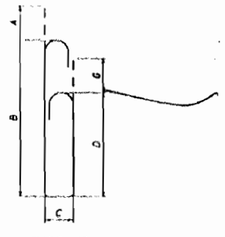

TYPE 45

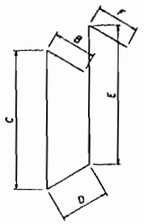

TYPE 46
ISOMETRIC VIEW

TYPE 47
ISOMETRIC VIEW

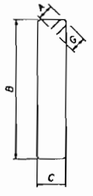

TYPE 48

NOTE:
FOR STANDARD BAR BENDING DETAILS, SEE SHEET A-6. REINFORCING STEEL SHALL BE ASTM. A615, GRADE 60.

6 MAY 96

FINLEY McNARY/JANSSEN SPAANS
a Joint Venture

Finley McNary Engineers, Inc
1391 Timberlane Road Suite 200
Tallahassee, Florida 32312-1721

Janssen & Spaans Engineers, Inc.
2825 East 56th Street
Indianapolis, Indiana 46220

REVISIONS

DATE	BY	DESCRIPTION	DATE	BY	DESCRIPTION	DATE	BY	DESCRIPTION	DATE	BY

	NAME	DATE
DR. BY	J.L.S.	1/96
CHK. BY	C.W.K.	1/96
SUPV.	H.D.R.	1/96

FINLEY McNARY/JANSSEN SPAANS

BOARD OF COUNTY COMMISSIONERS
LEE, COUNTY, FLORIDA
DEPARTMENT OF TRANSPORTATION

MIDPOINT BRIDGE
REINFORCMENT BAR LIST (28)

PROJECT NO	SHEET NO
5896	C-144A

BX1-156

MARK SIZE	MARK DES	LENGTH FT	LENGTH IN	NO BARS	TYP BAR	STY A	STY G	B FT	B IN	B FR	C FT	C IN	C FR	D FT	D IN	D FR	E FT	E IN	E FR	F FT	F IN	F FR	H FT	H IN	H FR	J FT	J IN	K FT	K IN	N	O
SUPERSTRUCTURE UNITS K & W (SPANS 38 THRU 41 AND 45 THRU 48)(2 REQUIRED)																															
5	S1	82	11	869	41			33	3		49	8														2	2			1	
4	S2	602	0	8	2			1	8		578	8		40	1	3/8														14	
4	S3	602	0	72	2			1	8		578	8		40	1	3/8														14	
4	S4	602	0	8	2			1	8		578	8		40	1	3/8														14	
4	S5	602	0	73	2			1	8		578	8		40	1	3/8														14	
4	S6	40	0	240	1			40	0																						
5	S7	82	11	869	41			46	1		36	10														2	2			1	
8	D01	37	6	32	1			37	6																						
8	D02	41	5	56	1			41	5																						
8	D03	42	1	8	1			42	1																						
6	D01	13	5	294	45	8	8	6	6		0	7		4	11	1/2															
6	D02	12	3	98	45	8	8	5	11		0	7		4	4	1/2															
5	D01	36	9	96	1			36	9																						
5	D02	9	3	280	1			9	3																						
5	D03	8	0	56	1			8	0																						
5	D04	16	6	42	46			0	10		7	2		1	0	1/2	7	2		0	10										
5	D05	8	7	14	47			0	10		7	2		0	10																
5	D06	3	0	64	1			3	0																						
5	D07	7	8	2	47			0	10		6	0		1	0	1/2	6	0		0	10										
5	D08	14	9	6	46			0	10		6	0		0	10																
5	D09	41	5	2	1			41	5																						
4	D01	14	11	539	48	4 1/2	4 1/2	6	6		0	7																			
4	D02	12	6	119	48	4 1/2	4 1/2	5	3	1/2	0	7																			
4	D03	5	4	80	49	4 1/2	4 1/2	1	7		0	9	1/4	1	4	1/2	0	9	1/2											11.5	
4	D04	3	5	80	13			0	8	1/2	1	3	1/2	1	4	1/2														18.5	71.5
4	D05	2	8	80	10			2	0		0	8																			
4	D06	2	0	80	1			2	0		0	7																			
4	D07	11	5	14	48	4 1/2	4 1/2	4	9		0	7																			
SUPERSTRUCTURE UNIT L (SPANS 42 THRU 44)																															
5	S1	82	11	781	41			33	3		49	8														2	2			1	
4	S2	538	0	8	2			1	8		519	8		44	10															11	
4	S3	538	0	72	2			1	8		519	8		44	10															11	
4	S4	538	0	8	2			1	8		519	8		44	10															11	
4	S5	538	0	73	2			1	8		519	8		44	10															11	
7	S6	152	6	160	2			3	9		145	0		50	10															2	
5	S7	82	11	781	41			46	1		36	10														2	2			1	
5	D1	6	11	40	1			6	11																						
5	D4	11	2	28	7			4	6		1	2		0	6		0	6													
7	D5	76	9	16	41			43	0		33	9														3	6			1	
5	D6	12	2	28	7			5	0		1	2		0	6		0	6													
5	D7	20	4	84	7			9	1		1	2		0	6		0	6													
5	D8	22	6	126	7			10	2		1	2		0	6		0	6													
7	D9	11	10	234	45			3	6		8	4																			
4	D10	7	7	28	1			7	7																						
4	D11	9	3	140	1			9	3																						
4	D12	8	9	28	13			3	9		2	6		2	6															10	10
4	D13	15	4	308	7			6	9		0	10		0	6		0	6													
4	D14	13	2	48	41			41	2		32	0														1	8			1	
4	D15	14	10	8	41			42	0		32	10														1	8			1	
4	D16	8	8	28	1			8	8																						
4	D18	12	0	154	7			5	2		0	8		0	6		0	6													
7	D19	12	1	60	45			3	9		8	4																			
4	D21	2	3	164	1			2	3																						
4	D22	2	3	164	1			2	3																						
4	D23	6	10	164	9	4	4	1	10		1	5		0	6		1	4													
4	D24	3	11	164	13			2	2		1	2		0	7															20	70
6	D25	75	9	22	41			42	6		33	3														2	7			1	
5	D26	80	3	2	41			44	9		35	6														2	2			1	
7	D27	84	4	4	41			51	5		32	11														3	6			1	
7	D28	2	4	128	1			2	4																						
7	D29	2	6	16	1			2	6																						
7	D35	7	1	8	1			7	1																						
7	D36	7	11	60	33	6		7	11																						
4	D37	8	4	24	1			8	4																						
5	D47	2	6	48	1			2	6																						
4	D48	7	8	48	6			2	4		0	6		2	0		0	6													
3	D47	2	6	96	29			0	0		0	4		0	8		2	5													80

MARK SIZE	MARK DES	LENGTH FT	LENGTH IN	NO BARS	TYP BAR	STY A	STY G	B FT	B IN	B FR	C FT	C IN	C FR	D FT	D IN	D FR	E FT	E IN	E FR	F FT	F IN	F FR	H FT	H IN	H FR	J FT	J IN	K FT	K IN	N	O
SUPERSTRUCTURE UNIT R (SPANS 55 THRU 57)																															
5	S1	82	11	484	41			33	3		49	8														2	2			1	
4	S2	293	1	9	2			1	8		281	5		36	7	3/8														7	
4	S3	293	1	104	2			1	8		281	5		36	7	3/8														7	
4	S4	293	1	9	2			1	8		281	5		36	7	3/8														7	
4	S5	293	1	13	2			1	8		281	5		36	7	3/8														7	
4	S6	40	0	160	1			40	0																						
5	S7	82	11	484	41			46	1		36	10														2	2			1	
7	D21	84	4	2	41			51	5		32	11														3	6			1	
6	D31	7	8	20	1			7	8																						
4	D38	4	5	120	13			2	5		1	0		1	0															45	45
4	D39	6	9	240	11			0	5		3	2		3	2																
4	D40	9	4	120	7			4	1		0	5		0	4	1/2	0	4	1/2												
5	D41	76	7	30	41			42	11		33	8														2	2			1	
7	D42	77	11	12	41			43	7		34	4														3	6			1	
4	D43	7	4	56	1			7	4																						
4	D44	8	3	48	1			8	3																						
4	D45	8	5	96	1			8	5																						
5	D46	7	4	48	1			7	4																						
5	D47	2	4	48	1			2	4																						
4	D49	5	2	150	1			5	2																						
SUPERSTRUCTURE UNITS S & T (SPANS 58 THRU 63)(2 REQUIRED)																															
5	S1	82	11	494	41			33	3		49	8														2	2			1	
4	S2	288	10	9	2			1	8		276	2		36	2															7	
4	S3A	289	2	13	2			1	8		277	6		36	2															7	
4	S3B	290	6	13	2			1	8		278	10		36	4															7	
4	S3C	291	10	13	2			1	8		280	2		36	6															7	
4	S3D	293	1	13	2			1	8		281	5		36	8															7	
4	S3E	294	5	13	2			1	8		282	9		36	10															7	
4	S3F	295	9	13	2			1	8		284	1		37	0															7	
4	S3G	297	1	13	2			1	8		285	5		37	2															7	
4	S3H	298	4	13	2			1	8		286	8		37	4															7	
4	S4	299	0	10	2			1	8		287	4		37	5															7	
4	S5	298	4	73	2			1	8		286	5		37	4															7	
4	S6	40	0	162	1			40	0																						
5	S7	82	11	494	41			46	1		36	10														2	2			1	
6	D31	7	8	24	1			7	8																						
4	D40	9	4	720	7			4	1		0	5		0	4	1/2	0	4	1/2												
5	D41	76	7	24	41			42	11		33	8														2	2			1	
7	D42	77	11	12	41			43	7		34	4														3	6			1	
4	D43	7	4	48	1			7	4																						
4	D44	8	3	48	1			8	3																						
4	D45	8	5	96	1			8	5																						
5	D46	7	4	48	1			7	4																						
5	D47	2	4	48	1			2	4																						
4	D49	5	2	150	1			5	2																						

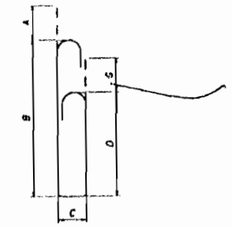

TYPE 45

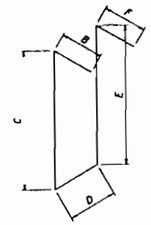

TYPE 46
ISOMETRIC VIEW

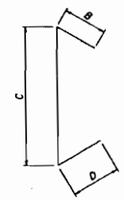

TYPE 47
ISOMETRIC VIEW

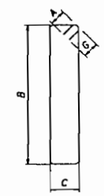

TYPE 48

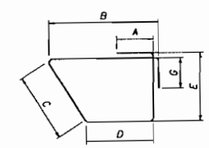

TYPE 49

NOTE:
FOR STANDARD BAR BENDING DETAILS, SEE SHEET A-6. REINFORCING STEEL SHALL BE ASTM. A615, GRADE 60.

6 MAY 96

FINLEY McNARY/JANSSEN SPAANS
a Joint Venture

Finley McNary Engineers, Inc
1391 Timberlane Road Suite 200
Tallahassee, Florida 32312-1721

Janssen & Spaans Engineers, Inc.
2825 East 56th Street
Indianapolis, Indiana 46220

REVISIONS

DATE	BY	DESCRIPTION	DATE	BY	DESCRIPTION	DATE	BY	DESCRIPTION	DATE	BY

	NAME	DATE
DR. BY	J.L.S.	1/96
CHK. BY	C.W.K.	1/96
SUPV.	H.D.R.	1/96

FINLEY McNARY/JANSSEN SPAANS

BOARD OF COUNTY COMMISSIONERS
LEE, COUNTY, FLORIDA
DEPARTMENT OF TRANSPORTATION

MIDPOINT BRIDGE
REINFORCING BAR LIST (29)

FISCAL YEAR	SHEET NO.
95	L-1

LX1-1

LEE COUNTY, FLORIDA

DEPARTMENT OF TRANSPORTATION

PLANS OF PROPOSED

COUNTY ROAD NO. 884

LEE COUNTY CONTRACT NO. C86111 4

PROJECT NO. 5896 BID PACKAGE 2

LEE COUNTY
MIDPOINT CORRIDOR PROJECT

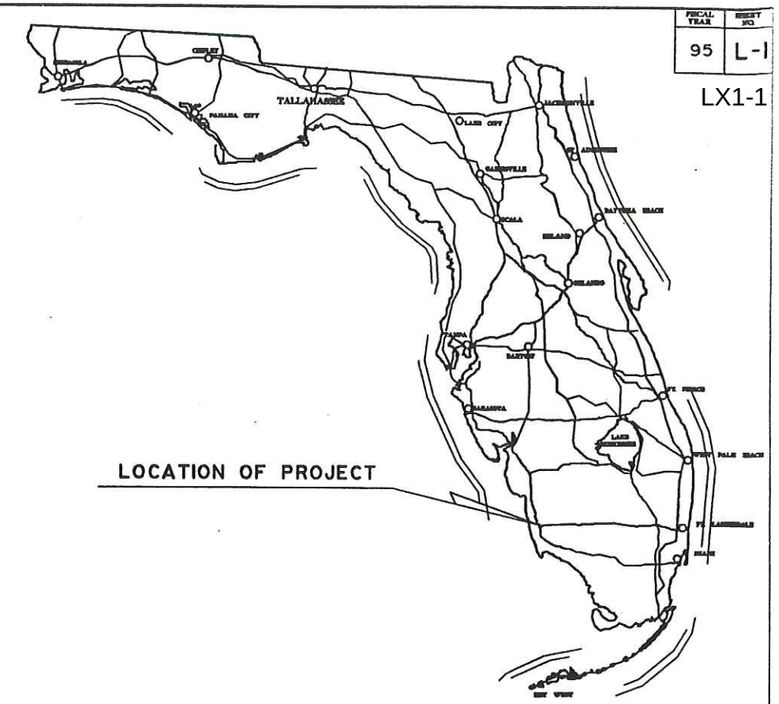

LOCATION OF PROJECT

INDEX OF ROADWAY LIGHTING PLANS

SHEET NO.	SHEET DESCRIPTION
L-1	KEY SHEET
L-2	TABULATION OF QUANTITIES
L-3	POLE DATA AND LEGEND
L-4 TO L-7	LIGHTING PLANS
L-8	LIGHTING DETAILS

LIGHTING PLANS

Final Plans

AS-Builts

PLANS PREPARED BY

Greiner INC.

CONSULTING ENGINEERS TAMPA, FLORIDA

LIGHTING PLANS ENGINEER OF RECORD
LUIS RODRIGUEZ, P.E.
P.O. BOX 31646
TAMPA, FLORIDA 33631-3416
(813)286-1711

THIS SEAL APPLIES TO THESE PROJECT DRAWINGS AS THEY EXISTED ON JAN. 31, 95 AND DOES NOT APPLY TO OR CERTIFY THE ACCURACY OF REVISIONS MADE BY OTHERS AFTER THAT DATE.

3/10/95

Conformed

MRJ

THESE PLANS HAVE BEEN PREPARED IN ACCORDANCE WITH AND ARE GOVERNED BY THE STATE OF FLORIDA, DEPARTMENT OF TRANSPORTATION, ROADWAY AND TRAFFIC DESIGN STANDARDS (BOOKLET DATED JANUARY, 1994).

REVISIONS		
DATE	BY	DESCRIPTION

ATTENTION IS DIRECTED TO THE FACT THAT THESE PLANS MAY HAVE BEEN REDUCED IN SIZE BY REPRODUCTION. THIS MUST BE CONSIDERED WHEN OBTAINING SCALED DATA.

GOVERNING SPECIFICATIONS STATE OF FLORIDA, DEPARTMENT OF TRANSPORTATION, STANDARD SPECIFICATIONS FOR ROAD AND BRIDGE CONSTRUCTION DATED 1991 AND SUPPLEMENTS THERETO.

LIGHTING PLANS APPROVED BY: LUIS RODRIGUEZ, P.E.

DATE: JAN.-31-95

P.E. NO: 41178

LEE COUNTY PROJECT MANAGER: MR. PAUL W. WINGARD, P.E.

PLOTTED: 27JAN95-06.02.40

C261000 EKSMPB01 CREATED ON: 13MAR94-6.05.03

PROJECT NO.	SHEET NO
5896-2	L-2

LX1-2

TABULATION OF QUANTITIES

BID ITEM NO.	DESCRIPTION	UNIT	SHEET NUMBERS L-4 ORIG	L-4 FINAL	L-5 ORIG	L-5 FINAL	L-6 ORIG	L-6 FINAL	L-7 ORIG	L-7 FINAL													TOTAL THIS SHEET ORIG	TOTAL THIS SHEET FINAL	GRAND TOTAL ORIG	GRAND TOTAL FINAL	REFERENCE SHEET
620-1-1	GROUNDING ELECTRODE (F & I)	LF	-		-		-		50	50													50	50	50	50	F.13. #6
715-1-113	CONDUCTOR (F & I) (INSULATED) (NO. 6)	LF	220	220	3780	3510	5050	4800	4860	4250			5%	of	Total	=	639	L.F					13910	13419	13910	13419	F.13. #6
715-1-114	CONDUCTOR (F & I) (INSULATED) (NO. 4)	LF	450	440	7560	7020	13550	12630	13900	12750			5%	of	total	=	1,642	L.F.					35460	34482	35460	34482	F.13 #6
715-2-115	CONDUIT (F & I UNDERGROUND) (PVC SCHEDULE 40) (1 1/4")	LF	-		-		-		20	20													20	20	20	20	F.13. #6
715-474-140	LIGHTING POLE COMPLETE (F & I WITH INTERNAL VIBRATION DAMPERS) (DOUBLE ARM WALL MTD.) (ALUM) (40')	EA	1	1	10	10	10	10	8	8													29	29	29	29	F.13 #6
715-7-11	LOAD CENTER (F & I) (SECONDARY VOLTAGE)	EA	-		-		-		1	1													1	1	1	1	F.13. #6

PAY ITEM FOOTNOTES

620-1 GROUNDING ELECTRODE

INCLUDES THE COST OF GROUNDING ELECTRODE AND ALL NECESSARY HARDWARE AS PER THE PLANS AND STANDARD INDEXES. INSTALL 50' VERTICAL, 5/8" GND. ROD AT SERVICE POINT.

715-1 CONDUCTOR

INCLUDES CONDUCTORS AS PER THE PLANS AND STANDARD INDEXES. PAYMENT SHALL BE MADE BASED ON LINEAR FT. OF SINGLE CONDUCTOR.

715-2 CONDUIT

INCLUDES CONDUIT, ELBOWS, SWEEPS, CONNECTING HARDWARE, TRENCHING AND BACKFILL AS PER THE PLANS AND STANDARD INDEXES. INCLUDES COST FOR 2 COATS OF COAL-TAR COATING FOR RGS CONDUIT INSTALLED UNDER PAVEMENT. THE LINEAR FT. PRICE FOR CONDUIT SHALL ALSO INCLUDE THE COST OF RESTORING CUT PAVEMENT, SIDEWALKS, SOD, ETC., TO ITS ORIGINAL CONDITION.

715-4 LIGHTING POLE

INCLUDES THE POLE, BRACKET ARM, LUMINAIRE WITH LAMP, ANCHOR BOLTS WITH LOCK NUTS AND WASHERS, FRANGIBLE BASE, FOUNDATION, SURGE PROTECTOR, FUSE HOLDERS WITH FUSES, AND THE NO. 10 COPPER RISERS AS PER THE PLANS AND STANDARD INDEXES.

715-7 LOAD CENTER - SQUARE "D" (ONLY)

INCLUDES THE CONCRETE PEDESTAL, ENCLOSURE, CONTACTOR, TRANSFORMER, BREAKER, SAFETY SWITCH, H.O.A. SWITCH, SURGE ARRESTER, FUSES, PHOTOELECTRIC SWITCH, METER BASE AND ALL EXTERNAL AND INTERNAL CONDUIT AND CONDUCTORS FOR THE SERVICE AS PER THE PLANS AND STANDARDS INDEXES.

715-14 PULL BOXES - QUAZITE, HEAVY DUTY (ONLY)

INCLUDES THE PULL BOX AND COVER AS PER THE PLANS AND STANDARD INDEXES. PULL BOXES SHOWN AT STATION 3187 SHALL BE INSTALLED UNDER BID PACKAGE 3.

3/10/95

REVISIONS

DATE	BY	DESCRIPTION	DATE	BY	DESCRIPTION	DATE	BY	DESCRIPTION	DATE	BY	DESCRIPTION

	NAME	DATE		NAME	DATE
DESIGNED BY	W.W.M.	07/93	DRAWN BY	E.B.P.	07/93
CHECKED BY	G.A.A.	07/93	CHECKED BY	W.W.M.	07/93
SUPERVISED BY:	L.R.				

LEE COUNTY DEPARTMENT OF TRANSPORTATION

APPROVED BY: LUIS RODRIGUEZ, P.E.

DATE:

Greiner

TABULATION OF QUANTITIES

PLOTTED: 27JAN95-06.06.50

C261000 ETOMPB01 CREATED ON:13MAR94-6.10.58.30

PROJECT NO.	SHEET NO
5896-2	L-3

LX1-3

CONVENTIONAL LIGHTING DESIGN CRITERIA

AVERAGE INITIAL INTENSITY		1.0 F.C.
UNIFORMITY RATIO	AVG/MIN	4/1 OR LESS
	MAX/MIN	10/1 OR LESS
WIND SPEED	90	M.P.H.

POLE DATA

POLE NO	CKT	STATION	DIST. OR ARM	LUM	MH	POLE SETBACK & NOTES	FIN
P1	B1	2115+85 ℄ BRIDGE	8'/8'	250/250	40'	MEDIAN EARRIER WALL	AL
P2	B1	2118+35					
P3	B1	2120+85.25					
P4	B1	2123+35					
P5	B1	2125+85					
P6	B1	2128+35.08					
P7	B2	2130+85					
P8	B2	2133+35					
P9	B2	2135+85					
P10	B2	2138+35					
P11	B2	2140+85					
P12	B2	2143+35					
P13	B2	2145+85					
P14	B2	2148+35					
P15	B3	2150+85					
P16	B3	2153+35					
P17	B3	2155+85					
P18	B3	2158+35					
P19	B3	2160+85					
P20	B3	2163+35					
P21	B3	2165+85					
P22	B3	2168+35					
P23	B3	2170+85					
P24	B3	2173+35					
P25	B3	2175+85					
P26	B3	2178+35					
P27	B3	2180+85					
P28	B3	2183+35					
P29	B3	2185+85					

* SEE TOLL PLAZA DRAWINGS FOR STANDBY CIRCUIT.

LEGEND

CHECKED BOXES UTILIZED IN PLAN PACKAGE	SYMBOL	DESCRIPTION
☐		400WATT HIGH PRESSURE SODIUM LUMINAIRE DESIGNED FOR MEDIUM NON CUTOFF, TYPE 3 DISTRIBUTION. INTEGRAL MAGNETIC REGULATOR TYPE BALLAST WIRED FOR 480 VOLT OPERATION. MOUNTING HEIGHT 45'.USE GE M-400 A2,CURVE #35-177352 OR EQUAL.
☑		250WATT HIGH PRESSURE SODIUM LUMINAIRE DESIGNED FOR MEDIUM,NON CUTOFF, TYPE 3 DISTRIBUTION. INTEGRAL MAGNETIC REGULATOR TYPE BALLAST WIRED FOR 480 VOLT OPERATION .MOUNTING HEIGHT 40'.USE GE M-400 A2 WITH CHARCOAL FILTER CURVE #35-177322 OR EQUAL.
☐		SPECIAL DESIGN POLE WITH 250 WATT HIGH PRESSURE SODIUM LUMINAIRE DESIGNED FOR MEDIUM, NON CUTOFF, TYPE 3 DISTRIBUTION. INTEGRAL MAGNETIC REGULATOR TYPE BALLAST WIRED FOR 480 VOLT OPERATION. MOUNTING HEIGHT 40'. USE GE M-400 A2, CURVE #35-177322 OR EQUAL. (SEE DETAIL ON SHEET NO.).
☐		EXISTING POLE AND LUMINAIRE TO REMAIN.
☐		EXISTING POLE AND LUMINAIRE TO BE REMOVED.
☐		HIGH MAST TOWER WITH FOUR 1000 WATT HIGH PRESSURE SODIUM LUMINAIRES WITH INTEGRAL AUTO-REGULATOR TYPE BALLAST WIRED FOR 480 VOLTS. THE LUMINAIRES SHALL PROVIDE A "CUTOFF" LIGHT DISTRIBUTION AS DEFINED BY IES. SHIELDS MAY BE UTILIZED TO PROVIDE THE CUTOFF VALUES (SEE INDEX 17502.) USE G.E. CURVE #35-176318 OR EQUAL. LUMINAIRES TO BE G.E. CAT. #HMA015S5AIGSC5 OR EQUAL.
☐		PENDANT HUNG UNDERDECK LUMINAIRE, 150 WATT HIGH PRESSURE SODIUM, WITH POLYCARBONATE REFRACTOR, INTEGRAL MAGNETIC REGULATOR BALLAST WIRED FOR 480 VOLTS. LUMINAIRE TO BE MOUNTED FLUSH WITH BOTTOM OF BRIDGE BEAM. (USE GE MINIMITE LUMINAIRE, CURVE #35-176025 OR EQUAL).
☐		PIER CAP MOUNTED UNDERDECK LUMINAIRE, 150 WATT HIGH PRESSURE SODIUM, WITH POLYCARBONATE REFRACTOR, INTEGRAL MAGNETIC REGULATOR BALLAST WIRED FOR 480 VOLTS. LUMINAIRE TO BE MOUNTED FLUSH WITH BOTTOM OF BRIDGE BEAM. (USE GE MINIMITE LUMINAIRE, CURVE #35-176025 OR EQUAL).
☑		1 1/4"C. SCHEDULE 40 PVC CONDUIT WITH AWG, THWN CONDUCTORS INSIDE (CONDUCTOR SIZE SHOWN ON PLANS) & 1#6 AWG, TW GREEN BOND (COPPER) RUN INSIDE CONDUIT UNLESS OTHERWISE NOTED ON PLANS. (SEE INDEX 17721).
☑		1 1/4" SCHEDULE 40 PVC CONDUIT EMBEDDED IN THE BARRIER WALL WITH AWG, THWN CONDUCTORS INSIDE (CONDUCTOR SIZE SHOWN ON PLANS) & 1#6 TW GREEN BOND (COPPER) RUN INSIDE CONDUIT.
☐		2" RIGID GALV.STEEL CONDUIT AT ROADWAY CROSSINGS WITH AWG,THWN CONDUCTORS INSIDE (CONDUCTOR SIZE SHOWN ON PLANS) AND 1#6 AWG, TW GREEN BOND (COPPER) RUN INSIDE CONDUIT. EXTEND CONDUIT BEYOND EDGE OF PROPOSED PAVEMENT TO PULL BOXES.
☑		SERVICE POINT LOAD CENTER (SEE INDEX 17504).
☑		PULL BOX (SEE INDEX 17503).PULL BOXES ARE REQUIRED AT BOTH ENDS OF CONDUIT AT ROADWAY CROSSINGS AND AS NECESSARY FOR THE COMPLETION OF THE PROJECT.
☑		PULL BOX IN CONCRETE STRUCTURE. SEE BRIDGE PLANS.
☐	OHT-3	OVERHEAD LIGHTED SIGN. (SEE INDEX 17505 AND SIGNING DRAWINGS)

NOTES:

1. FOR GENERAL NOTES SEE INDEX 17501 "ROADWAY AND TRAFFIC DESIGN STANDARDS" BOOKLET DATED JANUARY 1994. ALL INDEX REFERENCES ABOVE ARE FOUND IN THIS BOOKLET.

2) KEY TO LIGHT POLE LABELING

STATION 250-00 | B2 SERVICE PANEL & CKT. NO. | P5 POLE NO.

3/10/95

DATE	BY	DESCRIPTION	DATE	BY	DESCRIPTION	DATE	BY	DESCRIPTION	DATE	BY	DESCRIPTION

REVISIONS

	NAME	DATE		NAME	DATE
DESIGNED BY	W.W.M.	07/93	DRAWN BY	E.B.P.	07/93
CHECKED BY	G.A.A.	07/93	CHECKED BY	W.W.M.	07/93
SUPERVISED BY:	L.R.				

LEE COUNTY DEPARTMENT OF TRANSPORTATION

APPROVED BY: LUIS RODRIGUEZ, P.E.

DATE:

Greiner

POLE DATA AND LEGEND

PLOTTED: 27JAN95-06.04.50

C261000 EPDWPB01 CREATED ON:13MAR94-08.05.20

PROJECT NO.	SHEET NO
5896-2	L-4

LX1-4

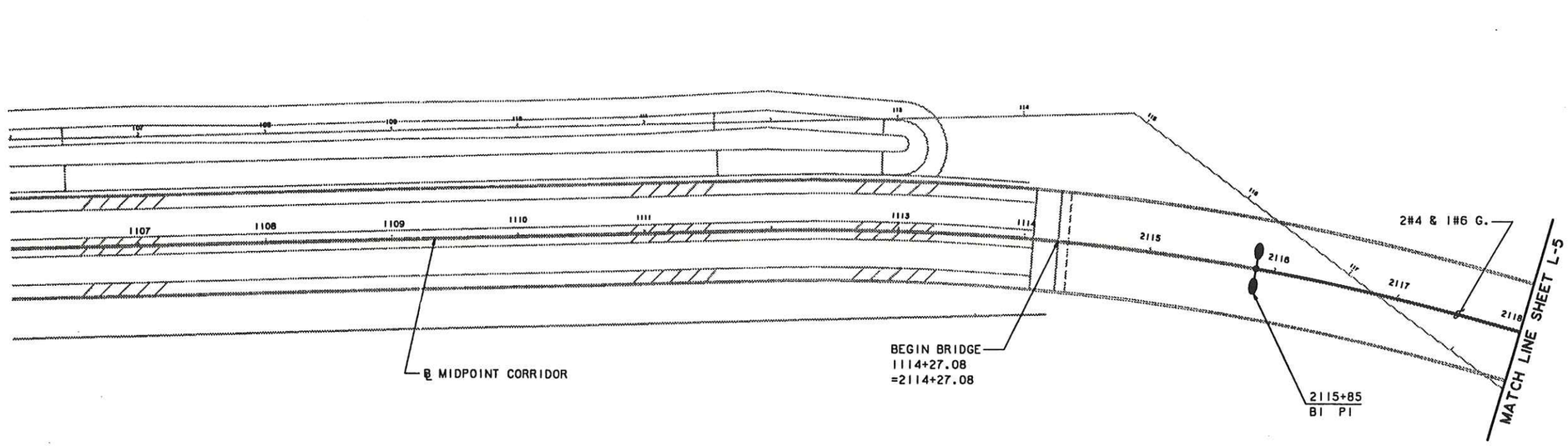

3/10/95

REVISIONS											
DATE	BY	DESCRIPTION	DATE	BY	DESCRIPTION	DATE	BY	DESCRIPTION	DATE	BY	DESCRIPTION

	NAME	DATE		NAME	DATE
DESIGNED BY	W.W.M.	07/93	DRAWN BY	E.B.P.	07/93
CHECKED BY	G.A.A.	07/93	CHECKED BY	W.W.M.	07/93
SUPERVISED BY: L.R.					

LEE COUNTY DEPARTMENT OF TRANSPORTATION

APPROVED BY: LUIS RODRIGUEZ, P.E.

DATE:

Greiner

LIGHTING PLAN

PLOTTED: 27JAN95-06.08.30

C261000 ELPMPB01 CREATED ON: 17DEC93-06.52.50

PROJECT NO.	SHEET NO
5896-2	L-5

LX1-5

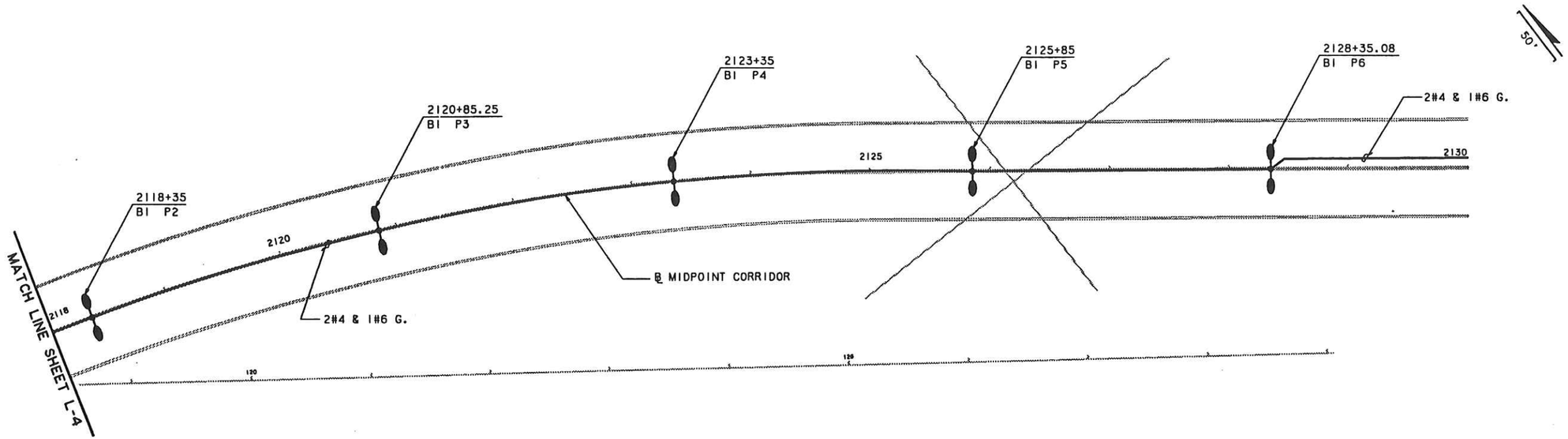

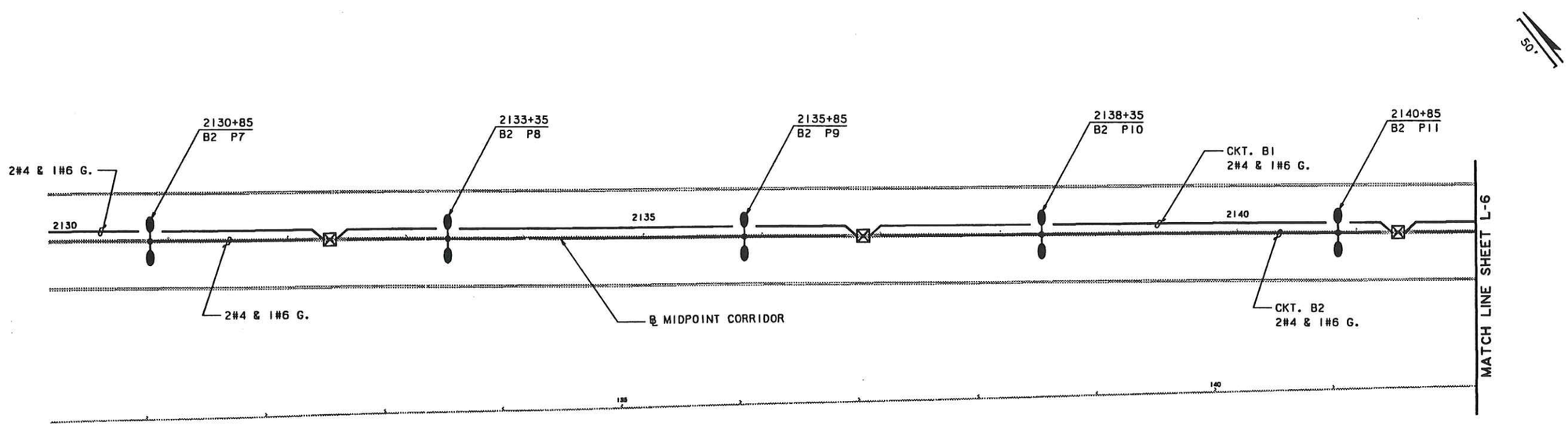

3/10/95

PLOTTED: 27JAN95-06.10.00

C261000 ELPMPB02 CREATED ON:29MAR93-16.53.30

REVISIONS

DATE	BY	DESCRIPTION	DATE	BY	DESCRIPTION	DATE	BY	DESCRIPTION	DATE	BY	DESCRIPTION

	NAME	DATE		NAME	DATE
DESIGNED BY	W.W.M.	07/93	DRAWN BY	E.B.P.	07/93
CHECKED BY	G.A.A.	07/93	CHECKED BY	W.W.M.	07/93

SUPERVISED BY : L.R.

LEE COUNTY DEPARTMENT OF TRANSPORTATION

APPROVED BY : LUIS RODRIGUEZ, P.E.

DATE :

Greiner

LIGHTING PLAN

PROJECT NO.	SHEET NO
5896-2	L-6

LX1-6

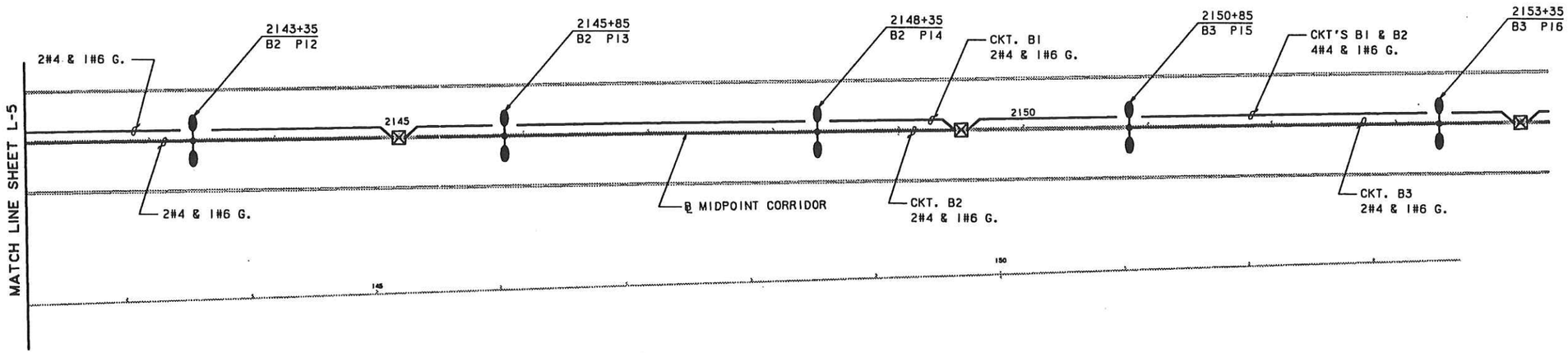

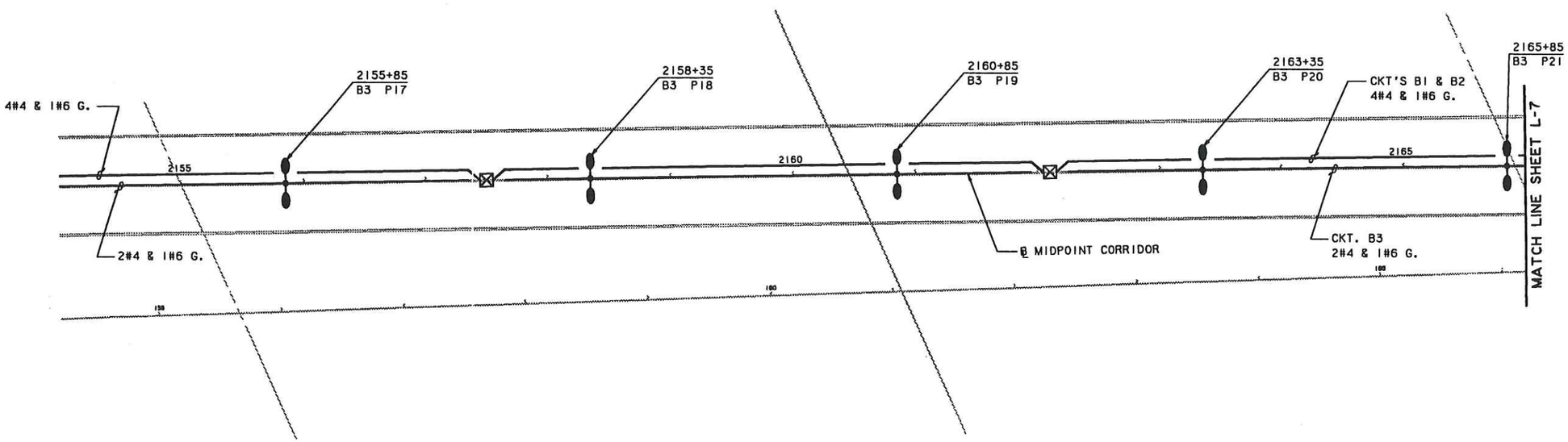

3/10/95

DATE	BY	DESCRIPTION	DATE	BY	DESCRIPTION	DATE	BY	DESCRIPTION	DATE	BY	DESCRIPTION

REVISIONS

	NAME	DATE		NAME	DATE
DESIGNED BY	W.W.M.	7/93	DRAWN BY	E.B.P.	7/93
CHECKED BY	G.A.A.	7/93	CHECKED BY	W.W.M.	7/93
SUPERVISED BY:	L.R.				

LEE COUNTY DEPARTMENT OF TRANSPORTATION

APPROVED BY: LUIS RODRIGUEZ, P.E.

DATE: -

Greiner

LIGHTING PLAN

PLOTTED: 27JAN95-06.12.00

C261000 ELPMPB03 CREATED ON:29MAR93-17.51.30

PROJECT NO.	SHEET NO
5896-2	L-7

LX1-7

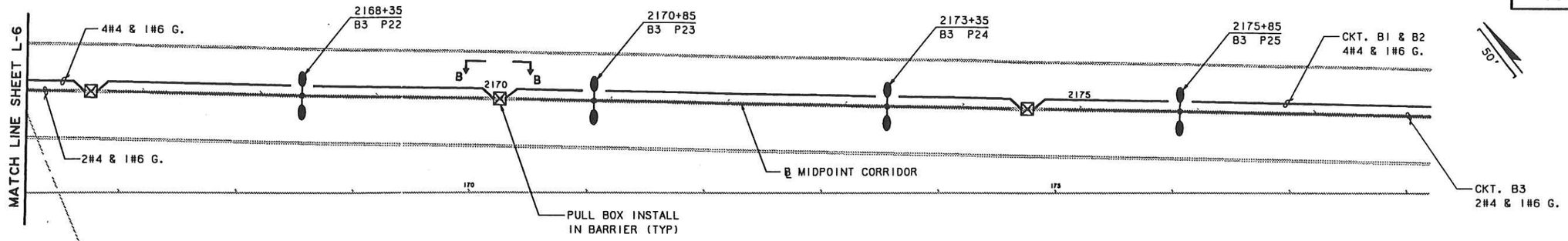

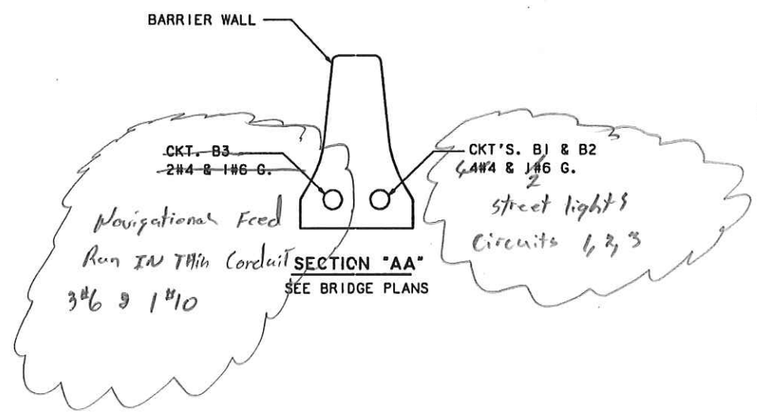

SECTION "AA"
SEE BRIDGE PLANS

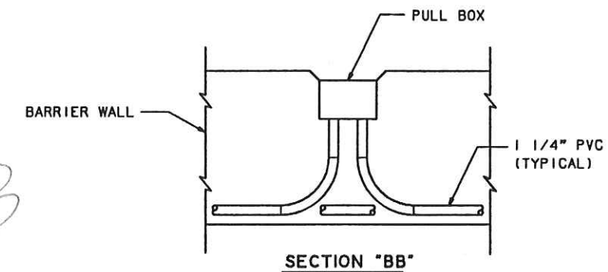

SECTION "BB"
(TYP. AT PULL BOXES)
SEE BRIDGE PLANS

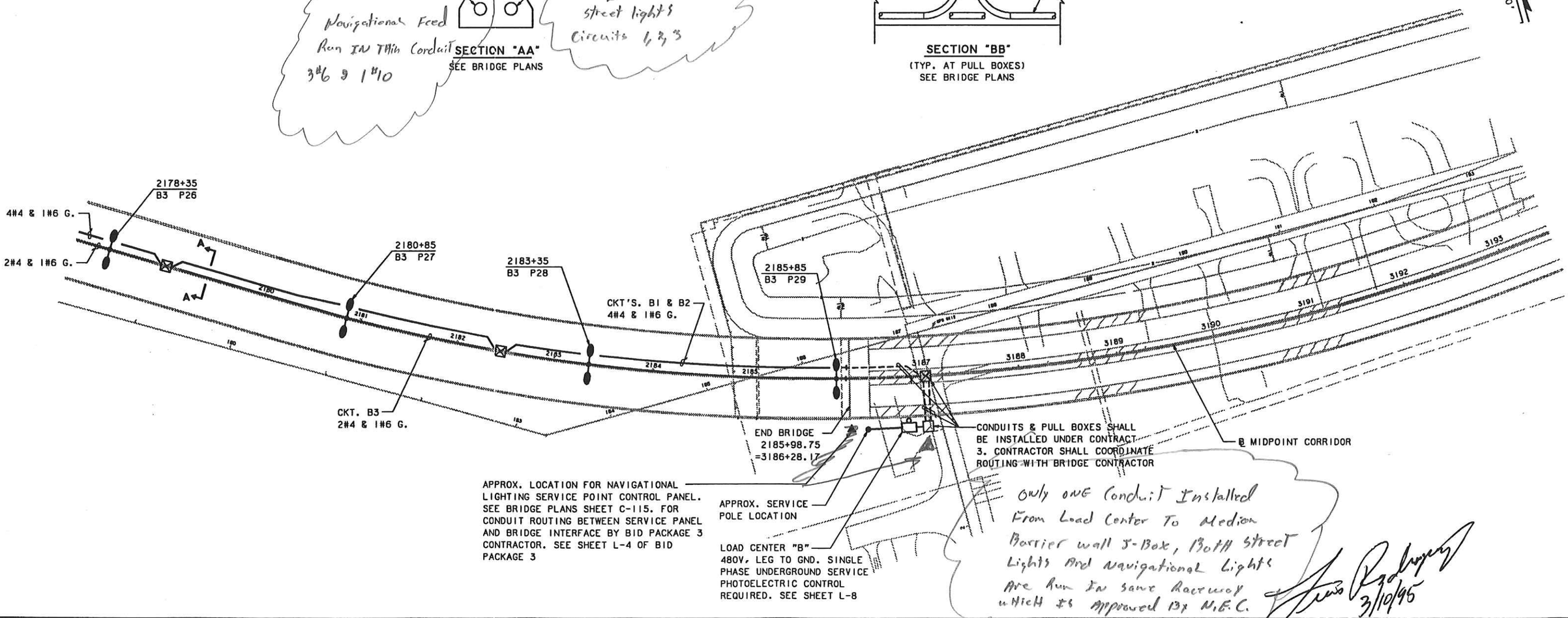

REVISIONS											
DATE	BY	DESCRIPTION	DATE	BY	DESCRIPTION	DATE	BY	DESCRIPTION	DATE	BY	DESCRIPTION

	NAME	DATE		NAME	DATE
DESIGNED BY	W.W.M.	07/93	DRAWN BY	E.B.P.	07/93
CHECKED BY	G.A.A.	07/93	CHECKED BY	W.W.M.	07/93
SUPERVISED BY:	L.R.				

LEE COUNTY DEPARTMENT OF TRANSPORTATION
APPROVED BY: LUIS RODRIGUEZ, P.E.
DATE:

Greiner

LIGHTING PLAN

C261000 ELPMPB04 CREATED ON:29MAR93-18.24.00 PLOTTED: 27JAN95-06.13.40

PROJECT NO.	SHEET NO
5896-2	L-8

LX1-8

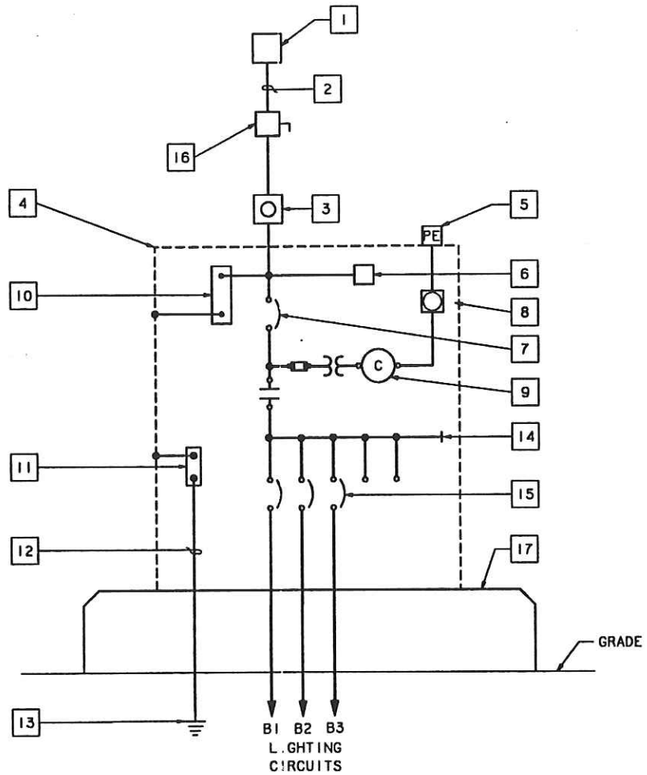

SERVICE POINT
LOAD CENTER "B"
N.T.S.

SERVICE POINT LEGEND

1. SERVICE POINT CONNECTION PEDESTAL TO POWER CO. 480V. TO GROUND SINGLE PHASE UNDERGROUND SERVICE. COORDINATE WITH FLORIDA POWER AND LIGHT CORP.
2. UNDERGROUND SERVICE CONDUCTOR, 2#3 THWN CU IN 2" RGS CONDUIT.
3. POWER COMPANY METER.
4. SERVICE CABINET NEMA 3R, PEDESTAL MOUNTED.
5. PHOTOELECTRIC SWITCH - 120V, 2000W. SPST.
6. SURGE ARRESTER-650V, CATEGORY "C".
7. MAIN CIRCUIT BREAKER 480V, 2P. (USE ONE POLE ONLY) SEE TABLE BELOW.
8. H.O.A.SELECTOR SWITCH.
9. ELECTRICALLY HELD LIGHTING CONTACTOR WITH 480-120V. 2000VA CPT, 1A, FUSE.
10. NEUTRAL BUS CU. - 100A - BONDED.
11. GROUND BUS - CU.
12. GROUNDING CONDUCTOR #6 AWG.
13. GROUND ROD-CU. 5/8" DIA. X 50' LONG
14. DISTRIBUTION BUS-CU.100A
15. BRANCH CIRCUIT BREAKERS-BOLT ON, 480V. 2P. (USE ONE POLE ONLY) SEE TABLE BELOW.
16. LOADBREAK DISCONNECT SWITCH, 100A, 600V, 2P, UNFUSED, LOCKABLE ENCOSURE, NEMA 3R → Not Installed (O.K per Richard Epps 11-26-97)
17. CONCRETE PEDESTAL. SEE INDEX 17841 FOR TYPICAL ARRANGEMENT.

18. Service For Navigational Lights IS Run thru Load center (Raceway) Conduit, Same AS Feed For street Lights

LOAD CENTER	TOTAL CONNECTED (AMPS)	CONTACTOR RATING (AMPS)	MAIN BKR.	BRANCH CIRCUITS														
				NO. B1			NO. B2			NO. B3			NO. B4			NO. B5		
				LOAD	BKR.	WIRE	LOAD	BKR.	WIRE	LOAD	BKR.	WIRE	LOAD	BKR.	WIRE	LOAD	BKR.	WIRE
B	40.6	100	100A	8.4	40A	NO.4	11.2	40A	NO.4	21.0	40A	NO.4		SPACE			SPACE	

8/10/95

REVISIONS											
DATE	BY	DESCRIPTION	DATE	BY	DESCRIPTION	DATE	BY	DESCRIPTION	DATE	BY	DESCRIPTION

	NAME	DATE		NAME	DATE
DESIGNED BY	W.W.M	7/93	DRAWN BY	E.B.P.	7/93
CHECKED BY	G.A.A.	7/93	CHECKED BY	W.W.M.	7/93
SUPERVISED BY:	L.R.				

LEE COUNTY DEPARTMENT OF TRANSPORTATION
APPROVED BY: LUIS RODRIGUEZ, P.E.
DATE: -

Greiner

LIGHTING DETAILS

C261000 EDTMP801 CREATED ON:13MAR94-08.51.10 PLOTTED: 27JAN95-06.01.20

SHEET	TABLE OF CONTENTS
1	General Notes, TTC Tables
2	Definitions Temporary Traffic Control Devices Overhead Work Railroads Sight Distance Above Ground Hazard
3	Clear Zone Widths For Work Zones Superelevation Length Of Lane Closures Overweight/Oversize Vehicles Lane Widths High-Visibility Safety Apparel Speed Reduction Signing
4	Flagger Control Survey Work Zones Signs
5	Work Zone Sign Supports
6	Commonly Used Warning and Regulatory Signs In Work Zones
7	Manholes/Crosswalks/Joints Truck Mounted Attenuators Signals Channelizing Devices Channelizing Devices Consistency Advanced Warning Arrow Boards
8	Drop-Offs In Work Zones
9	Business Entrance Temporary Asphalt Separator
10	Channelizing Devices Notes Temporary Barrier Notes
11	Pavement Markings

GENERAL NOTES:

1. This Index contains information specific to the Federal and State guidelines and standards for the preparation of traffic control plans and for the execution of traffic control in work zones, for construction and maintenance operations and utility work on highways, roads and streets on the State Highway System. Certain requirements in this Index are based on the high volume nature of State Highways. For highways, roads and streets off the State Highway System, the local agency (City/County) having jurisdiction may adopt requirements based on the minimum requirements provided in the MUTCD.

2. Use this Index in accordance with the Plans and Indexes 102-601 through 102-680. Indexes 102-601 through 102-680 are Department-specific typical applications of commonly encountered situations. Adjust device location or number thereof as recommended by the Worksite Traffic Supervisor and approved by the Engineer. Devices include, but are not limited to, flaggers, portable temporary signals, signs, pavement markings, and channelizing devices. Comply with MUTCD or applicable Department criteria for any changes and document the reason for the change.

3. Except for emergencies, any road closure on State Highway System must comply with Section 335.15, F.S.

TABLE 1
CHANNELIZING DEVICE SPACING

Work Zone Speed (mph)	Max. Spacing (feet)			
	Cones or Temporary Tubular Markers		Type I Barricades, Type II Barricades, Vertical Panels, or Drums	
	Taper	Tangent	Taper	Tangent
≤ 45	25	50	25	50
≥ 50	25	50	50	100

TABLE 2
TAPER LENGTH "L"

Work Zone Speed (mph)	Min. Length (feet)
≤ 40	$L = \frac{WS^2}{60}$
≥ 45	$L = WS$

Where: W = width of offset in feet
S = speed in mph

TABLE 3
WORK ZONE SIGN SPACING "X"

Road Type	Min. Spacing (feet)
Arterials and Collectors with Work Zone Speed ≤ 40 mph	200
Arterials and Collectors with Work Zone Speed ≥ 45 mph	500
Limited Access Roadways *	1,500

* For Limited access roadways with work zone speed ≤ 55 mph, the minimum spacing may be reduced in accordance with the MUTCD and as approved by the Engineer.

TABLE 4
BUFFER LENGTH "B"

Work Zone Speed (mph)	Min. Length (feet)
25	155
30	200
35	250
40	305
45	360
50	425
55	495
60	570
65	645
70	730

Note: When Buffer Length "B" cannot be attained due to geometric constraints, use the greatest length possible, but not less than 155 feet.

SYMBOLS:

- Work Area
- Channelizing Device
- Work Zone Sign
- Type III Barricade
- Lane Identification and Direction of Traffic

10:53:44 AM
10/3/2023

DEFINITIONS:

Regulatory Speed (In Work Zones)

The maximum permitted travel speed posted for the work zone is indicated by the regulatory speed limit signs. The work zone speed must be shown or noted in the plans. This speed should be used as the minimum design speed to determine runout lengths, departure rates, flare rates, lengths of need, clear zone widths, taper lengths, crash cushion requirements, marker spacings, superelevation and other similar features.

Advisory Speed

The maximum recommended travel speed through a curve or a hazardous area.

Travel Way

The portion of the roadway for the movement of vehicles. For traffic control through work zones, travel way may include the temporary use of shoulders and any other permanent or temporary surface intended for use as a lane for the movement of vehicular traffic.

a. Travel Lane: The designated widths of roadway pavement marked to carry through traffic and to separate it from opposing traffic or traffic occupying other traffic lanes.

b. Auxiliary Lane: The designated widths of roadway pavement marked to separate speed change, turning, passing and climbing maneuvers from through traffic.

Detour, Lane Shift, and Diversion

A detour is the redirection of traffic onto another roadway to bypass the temporary traffic control zone. A lane shift is the redirection of traffic onto a different section of the permanent pavement. A diversion is the redirection of traffic onto a temporary roadway, usually adjacent to the permanent roadway and within the limits of the right of way.

Aboveground Hazard

An aboveground hazard is any object, material or equipment other than traffic control devices that encroaches upon the travel way or that is located within the clear zone which does not meet the Department's safety criteria, i.e., anything that is greater than 4" in height and is firm and unyielding or doesn't meet breakaway requirements.

TEMPORARY TRAFFIC CONTROL DEVICES:

1. All temporary traffic control devices shall be ON the Department's Approved Products List (APL). Ensure the appropriate APL number is permanently marked on the device in a readily visible location.

2. All temporary traffic control devices shall be removed as soon as practical when they are no longer needed. When work is suspended for short periods of time, temporary traffic control devices that are no longer appropriate shall be removed or covered. Do not store temporary traffic control devices on the shoulder, sidewalk, or other roadway facility not affected by the work when work is suspended.

3. Arrow Boards, Portable Changeable Message Signs, Radar Speed Display Trailer, Portable Regulatory Signs, and any other trailer mounted device shall be delineated with a channelizing device placed at each corner when in use and shall be moved outside the travel way and clear zone or be shielded by a barrier or crash cushion when not in use.

OVERHEAD WORK:

Work is only allowed over a traffic lane when one of the following options is used:

OPTION 1 (OVERHEAD WORK USING A MODIFIED LANE CLOSURE)

Overhead work using a modified lane closure is allowed if all of the following conditions are met:

a. Work operation is located in a signalized intersection and limited to signals, signs, lighting and utilities.
b. Work operations are 60 minutes or less.
c. Speed limit is 45 mph or less.
d. Aerial lift equipment in the work area has high-intensity, rotating, flashing, oscillating, or strobe lights operating.
e. Aerial lift equipment is placed directly below the work area to close the lane.
f. Traffic control devices are placed in advance of the vehicle/equipment closing the lane using a minimum 100 foot taper.
g. Volume or complexity of the roadway may dictate additional devices, signs, flagmen and/or a traffic control officer.

OPTION 2 (OVERHEAD WORK ABOVE AN OPEN TRAFFIC LANE)

Overhead work above a open traffic lane is allowed if all of the following conditions are met:

a. Work operation is located on a utility pole, light pole, signal pole, or their appurtenances.
b. Work operations are 60 minutes or less.
c. Speed limit is 45 mph or less.
d. No encroachment by any part of the work activities and equipment within an area bounded by 2 feet outside the edge of travel way and 18 feet high.
e. Aerial lift equipment in the work area has high-intensity, rotating, flashing, oscillating, or strobe lights operating.
f. Volume or complexity of the roadway may dictate additional devices, signs, flagmen and/or a traffic control officer.
g. Adequate precautions are taken to prevent parts, tools, equipment and other objects from falling into open lanes of traffic.
h. Other Governmental Agencies, Rail facilities, or Codes may require a greater clearance. The greater clearance required prevails as the rule.

OPTION 3 (OVERHEAD WORK ADJACENT TO AN OPEN TRAFFIC LANE)

Overhead work adjacent to an open traffic lane is allowed if all of the following conditions are met:

a. Work operation is located on a utility pole, light pole, signal pole, or their appurtenances.
b .Work operations are 1 day or less.
c. Speed limit is 45 mph or less.
d. No encroachment by any part of the work activities and equipment within 2 foot from the edge of travel way up to 18' height. Above 18' in height, no encroachment by any part of the work activities and equipment over the open traffic lane (except as allowed in Option 2 for work operations of 60 minutes or less).
e. Aerial lift equipment in the work area has high-intensity, rotating, flashing, oscillating, or strobe lights operating.
f. Volume or complexity of the roadway may dictate additional devices, signs, flagmen and/or a traffic control officer.
g. Adequate precautions are taken to prevent parts, tools, equipment and other objects from falling into open lanes of traffic.
h. Other Governmental Agencies, Rail facilities, or Codes may require a greater clearance. The greater clearance required prevails as the rule.

OVERHEAD WORK: (Cont.)

OPTION 4 (OVERHEAD WORK MAINTAINING TRAFFIC WITH NO ENCROACHMENT BELOW THE OVERHEAD WORK AREA)

Traffic shall be detoured, shifted, diverted or paced as to not encroach in the area directly below the overhead work operations in accordance with the appropriate index drawing or detailed in the plans. This option applies to, but not limited to, the following construction activities:

a. Beam, girder, segment, and bent/pier cap placement.
b. Form and falsework placement and removal.
c. Concrete placement.
d. Railing construction located at edge of deck.
e. Structure demolition.

OPTION 5 (CONDUCTOR/CABLE PULLING ABOVE AN OPEN TRAFFIC LANE)

Overhead cable and/or de-energized conductor installations initial pull to proper tension shall be done in accordance with the appropriate Index or temporary traffic control plan.

Continuous pulling operations of secured cable and/or conductors are allowed over open lane(s) of traffic with no encroachment by any part of the work activities, materials or equipment within the minimal vertical clearance above the travel way. The utility shall take precautions to ensure that pull ropes and conductors/cables at no time fall below the minimum vertical clearance.

On Limited Access facilities, a site specific temporary traffic control plan is required. The temporary traffic control plan shall include:

a. The temporary traffic control set up for the initial pulling of the pull rope across the roadway.
b. During pulling operations, advance warning consisting of no less than a Changeable Message Sign upstream of the work area with alternating messages, "Overhead Work Ahead" and "Be Prepared to Stop" followed by a traffic control officer and police vehicle with blue lights flashing during the pulling operation.

RAILROADS:

Railroad crossings affected by a construction project should be evaluated for traffic controls to reduce queuing on the tracks. The evaluation should include as a minimum: traffic volumes, distance from the tracks to the intersections, lane closure or taper locations, signal timing, etc.

SIGHT DISTANCE:

1. Tapers: Transition tapers should be obvious to drivers. If restricted sight distance is a problem (e.g., a sharp vertical or horizontal curve), the taper should begin well in advance of the view obstruction. The beginning of tapers should not be hidden behind curves.

2. Intersections: Traffic control devices at intersections must provide sight distances for the road user to perceive potential conflicts and to traverse the intersection safely. Construction equipment and materials shall not restrict intersection sight distance.

ABOVEGROUND HAZARD:

1. Aboveground hazards (see definitions) are to be considered work areas during working hours and treated with appropriate work zone traffic control procedures. During nonworking hours, all objects, materials and equipment that constitute an aboveground hazard must be stored/placed outside the travel way and clear zone or be shielded by a barrier or crash cushion.

2. For aboveground hazards within a work zone the clear zone required should be based on the regulatory speed posted during construction.

CLEAR ZONE WIDTHS FOR WORK ZONES:

The term 'clear zone' describes the unobstructed relatively flat area, impacted by construction, extending outward from the edge of the traffic lane. The table below gives clear zone widths in work zones for medians and roadside conditions other than for roadside canals; where roadside canals are present, clear zone widths are to conform with the distances to canals as described in the FDOT Design Manual 215.2.

TABLE 5

CLEAR ZONE WIDTHS FOR WORK ZONES

WORK ZONE SPEED (MPH)	TRAVEL LANES & MULTILANE RAMPS (feet)	AUXILIARY LANES & SINGLE LANE RAMPS (feet)
60-70	30	18
55	24	14
45-50	18	10
30-40	14	10
ALL SPEEDS CURB & GUTTER	4' BEHIND FACE OF CURB	4' BEHIND FACE OF CURB

NOTE: For temporary conditions where existing curb has been removed but not reconstructed, curb and gutter values may be used.

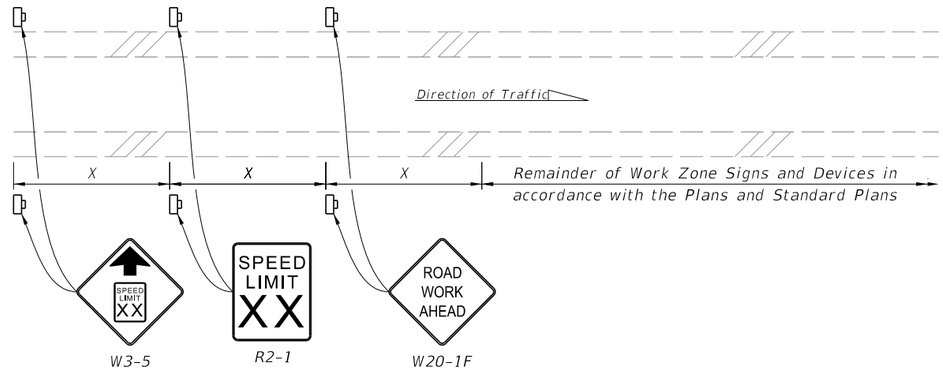

NOTES:

1. X = Work Zone Sign Spacing
2. When called for in the Plans, use this detail in accordance with the Plans and Standard Plans. Place the speed reduction signs (W3-5 and R2-1) in advance of the "Road Work Ahead" sign (W20-1F) as shown.
3. Do not use this detail in conjunction with the Motorist Awareness System.
4. For speed reductions greater than 10 MPH, reduce the speed in 10 MPH increments of 'X' distance. Do not reduce the speed below the minimum statutory speed for the class of facility.
5. Place additional "Speed Limit" signs (R2-1) at intervals of no more than one mile for rural conditions and 1,000 feet for urban conditions.
6. For undivided roadways, omit the signs shown in the median.
7. Remove temporary regulatory speed signs as soon as the conditions requiring the reduced speed no longer exist. Once the work zone regulatory speeds are removed, the regulatory speed existing prior to construction will automatically go back into effect.

SPEED REDUCTION SIGNING

SUPERELEVATION:

Horizontal curves constructed in conjunction with work zone traffic control should have the required superelevation applied to the design radii. Under conditions where normal crown controls curvature, the minimum radii that can be applied are listed in the table below.

TABLE 6

MINIMUM RADII FOR NORMAL CROWN

WORK ZONE POSTED SPEED	MINIMUM RADIUS
MPH	feet
70	4090
65	3130
60	2400
55	1840
50	1390
45	1080
40	820
35	610
30	430
Superelevate When Smaller Radii is Used	

LENGTH OF LANE CLOSURES:

For interstates and state highways with a posted speed of 55MPH or greater, lane closures must not exceed 3 miles (includes taper, buffer, and work zone) in any given direction and must not close two consecutive interchanges.

OVERWEIGHT/OVERSIZE VEHICLES:

Restrictions to Lane Widths, Heights or Load Capacity can greatly impact the movement of over dimensioned loads. The Contractor shall notify the Engineer who in turn shall notify the State Permits Office, phone no. (850) 410-5777, at least seven calendar days in advance of implementing a maintenance of traffic plan which will impact the flow of overweight/oversized vehicles. Information provided shall include location, type of restriction (height, width or weight) and restriction time frames. When the roadway is restored to normal service the State Permits Office shall be notified immediately.

LANE WIDTHS:

Lane widths of through roadways should be maintained through work zone travel ways wherever practical. Provide minimum widths for work zone travel lanes as follows: 11' for Interstate with at least one 12' lane provided in each direction, unless formally excepted by the Federal Highway Administration; 11' for all other limited access roadways; and 10' for all other facilities.

HIGH-VISIBILITY SAFETY APPAREL:

All high-visibility safety apparel shall meet the requirements of the International Safety Equipment Association (ISEA) and the American National Standards Institute (ANSI) for "High-Visibility Safety Apparel", and labeled as ANSI/ISEA 107-2004 or newer. The apparel background (outer) material color shall be either fluorescent orange-red or fluorescent yellow-green as defined by the standard. The retroreflective material shall be orange, yellow, white, silver, yellow-green, or a fluorescent version of these colors, and shall be visible at a minimum distance of 1,000 feet. Class 3 apparel may be substituted for Class 2 apparel. Replace apparel that is not visible at 1,000 feet.

WORKERS: All workers within the right-of-way shall wear ANSI/ISEA Class 2 apparel. Workers operating machinery or equipment in which loose clothing could become entangled during operation shall wear fitted high-visibility safety apparel. Workers inside the bucket of a bucket truck are not required to wear high-visibility safety apparel.

UTILITIES: When other industry apparel safety standards require utility workers to wear apparel that is inconsistent with FDOT requirements such as NFPA, OSHA, ANSI, etc., the other standards for apparel may prevail.

FLAGGERS: For daytime activities, Flaggers shall wear ANSI/ISEA Class 2 apparel. For nighttime activities, Flaggers shall wear ANSI/ISEA Class 3 apparel.

10:53:56 AM
10/3/2023

FLAGGER CONTROL:

Regulatory Speed (In Work Zones)

Where flaggers are used, a FLAGGER symbol or legend sign must replace the WORKERS symbol or legend sign.

The flagger must be clearly visible to approaching traffic for a distance sufficient to permit proper response by the motorist to the flagging instructions, and to permit traffic to reduce speed or to stop as required before entering the work site. Flaggers shall be positioned to maintain maximum color contrast between the Flagger's high-visibility safety apparel and equipment and the work area background.

Hand-Signaling Devices

STOP/SLOW paddles are the primary hand-signaling device. The STOP/SLOW paddle shall have an octagonal shape on a rigid handle. If the STOP/SLOW paddle is placed on a rigid staff, the minimum length of the staff, measured from the bottom of the paddle to the end of the staff that rests on the ground, must not be less than 6 ft. STOP/SLOW paddles shall be at least 24 inches wide with letters at least 6 inches high and should be fabricated from light semirigid material. The background of the STOP face shall be red with white letters and border. The background of the SLOW face shall be orange with black letters and border. When used at night-time, the STOP/SLOW paddle shall be retroreflectorized.

Flag use is limited to immediate emergencies, intersections, and when working on the centerline or shared left turn lanes where two (2) flaggers are required and there is opposing traffic in the adjacent lanes. Flags, when used, shall be a minimum of 24 inches square, made of a good grade of red material, and securely fastened to a staff that is approximately 36 inches in length. When used at nighttime, flags shall be retroreflectorized red.

Flashlight, lantern or other lighted signal that will display a red warning light shall be used at night.

Flagger Stations

Flagger stations shall be located far enough in advance of the work area so that approaching road users will have sufficient distance to stop before entering the work area. When used at nighttime, the flagger station shall be illuminated.

SURVEY WORK ZONES:

The SURVEY CREW AHEAD symbol or legend sign shall be the principal Advance Warning Sign used for Traffic Control Through Survey Work Zones and may replace the ROAD WORK AHEAD sign when lane closures occur, at the discretion of the Party Chief.

When Traffic Control Through Work Zones is being used for survey purposes only, the END ROAD WORK sign as called for on certain 102 Series of Indexes should be omitted.

Survey Between Active Traffic Lanes or Shared Left Turn Lanes

The following provisions apply to Main Roadway Traffic Control Work Zones. These provisions must be adjusted by the Party Chief to fit roadway and traffic conditions when the Survey Work Zone includes intersections.

(A) A STAY IN YOUR LANE (MOT-1-06) sign shall be added to the Advance Warning Sign sequence as the second most immediate sign from the work area.

(B) Elevation Surveys-Cones may be used at the discretion of the Party Chief to protect prism holder and flagger(s). Cones, if used, may be placed at up to 50' intervals along the break line throughout the work zone.

SURVEY WORK ZONES: (Cont.)

(C) Horizontal Control-With traffic flow in the same direction, cones shall be used to protect the backsight tripod and/or instrument. Cones shall be placed at the equipment, and up to 50' intervals for at least 200' towards the flow of traffic.

(D) Horizontal Control-With traffic flow in opposite directions, cones shall be used to protect the backsight tripod and/or instrument. Cones shall be placed at the equipment, and up to 50' intervals for at least 200' in both directions towards the flow of traffic.

SIGNS:

SIGN MATERIALS

Mesh signs and non-retroreflectice vinyl signs may only be used for daylight operations. Non-retroreflectice vinyl signs must meet the requirements of Specifications Section 994.

Retroreflective vinyl signs meeting the requirements of Specification Section 994 may be used for daylight or night operations not to exceed 1 day except as noted in the Indexes.

Rigid or Lightweight sign panels may be used in accordance with the vendor APL drawing for the sign stand to which they are attached.

INTERSECTING ROAD SIGNING

Signing for the control of traffic entering and leaving work zones by way of intersecting crossroads shall be adequate to make drivers aware of work zone conditions. When Work operations exceed 60 minutes, place the ROAD WORK AHEAD sign on the side street entering the work zone.

ADJOINING AND/OR OVERLAPPING WORK ZONE SIGNING

Adjoining work zones may not have sufficient spacing for standard placement of signs and other traffic control devices in their advance warning areas or in some cases other areas within their traffic control zones. Where such restraints or conflicts occur or are likely to occur, one of the following methods will be employed to avoid conflicts and prevent conditions that could lead to misunderstanding on the part of the traveling public as to the intended travel way by the traffic control procedure applied:

(A) For scheduled projects the engineer in responsible charge of project design will resolve anticipated work zone conflicts during the development of the project traffic control plan. This may entail revision of plans on preceding projects and coordination of plans on concurrent projects.

(B) Unanticipated conflicts arising between adjoining in progress highway construction projects will be resolved by the Resident Engineer for projects under his residency, and, by the District Construction Engineer for in progress projects under adjoining residencies.

(C) The District Maintenance Engineer will resolve anticipated and occurring conflicts within scheduled maintenance operations.

(D) The Unit Maintenance Engineer will resolve conflicts that occur within routine maintenance works; between routine maintenance work, unscheduled work and/or permitted work; and, between unit controlled maintenance works and highway construction projects.

SIGNS: (Cont.)

SIGN COVERING AND INTERMITTENT WORK STOPPAGE SIGNING

Existing or temporary traffic control signs that are no longer applicable or are inconsistent with intended travel paths shall be removed or fully covered.

Sign blanks or other available coverings must completely cover the existing sign. Rigid sign coverings shall be the same size as the sign it is covering, and bolted in a manner to prevent movement.

Sign covers are incidental to work operations and are not paid for separately.

SIGNING FOR DETOURS, LANE SHIFTS AND DIVERSIONS

Detours should be signed clearly over their entire length so that motorists can easily determine how to return to the original roadway. The reverse curve (W1-4) warning sign should be used for the advanced warning for a lane shift. A diversion should be signed as a lane shift.

EXTENDED DISTANCE ADVANCE WARNING SIGN

Advance Warning Signs shall be used at extended distance of one-half mile or more when limited sight distance or the nature of the obstruction may require a motorist to bring their vehicle to a stop. Extended distance Advanced Warning Signs may be required on any type roadway, but particularly be considered on multilane divided highways where vehicle speed is generally in the higher range (45 MPH or more).

UTILITY WORK AHEAD SIGN

The UTILITY WORK AHEAD (W21-7) sign may be used as an alternate to the ROAD WORK AHEAD or the ROAD WORK XX FT (W20-1) sign for utility operations on or adjacent to a highway.

LENGTH OF ROAD WORK SIGN

The length of road work sign (G20-1) bearing the legend ROAD WORK NEXT_____ MILES is required for all projects of more than 2 miles in length. The number of miles entered should be rounded up to the nearest mile. The sign shall be located at begin construction points.

GROOVED PAVEMENT AHEAD SIGN

The GROOVED PAVEMENT AHEAD sign is required 500 feet in advance of a milled or grooved surface open to traffic. The W8-15P placard shall be used in conjunction with the GROOVED PAVEMENT AHEAD sign.

END ROAD WORK SIGN

The END ROAD WORK sign (G20-2) should be installed on all projects, but may be omitted where the work operation is less than 1 day. The sign should be placed approximately 500 feet beyond the end of a construction or maintenance project unless other distance is called for in the plans. When other Construction or Maintenance Operations occur within 1 mile this sign should be omitted and signing coordinated in accordance with Index 102-600, ADJOINING AND/OR OVERLAPPING WORK ZONE SIGNING.

NOTES:

1. All signs shall be post mounted when work operations exceed one day except for:

   a. Road closure signs mounted in accordance with the vendor drawing for the Type III Barricade shown on the APL.
   b. Pedestrian and bicycle advanced warning or pedestrian regulatory signs mounted on sign supports in accordance with the vendor drawing shown on the APL.
   c. Median barrier mounted signs per Index 700-013.
   d. Bridge mounted signs per Index 700-012.

2. Unless shielded with barrier or outside of the Clear Zone, signs mounted on temporary supports or barricades, and barricade/sign combination must be crashworthy in accordance with NCHRP 350 requirements and included on the Approved Products List (APL).

3. Use only approved systems listed on the Department's Approved Products List (APL).

4. Manufacturers seeking approval of U-Channel and steel square tube sign support assemblies for inclusion on the Approved Products List (APL) must submit a APL application, design calculations (for square tube only), and detailed drawings showing the product meets all the requirements of this Index.

5. Provide 3 lb/ft Steel U-Channel Posts with a minimum section modulus of 0.43 in³ for 60 ksi steel, a minimum section modulus of 0.37 in³ for 70 ksi steel, or a minimum section modulus of 0.34 in³ for 80 ksi steel.

6. Provide 4 lb/ft Steel U-Channel Posts with a minimum section modulus of 0.56 in³ for 60 ksi steel, or a minimum section modulus of 0.47 in³ for 70 ksi or 80 ksi steel.

7. U-channel posts shall conform with ASTM A 499, Grade 60, or ASTM A 576, Grade 1080 (with a minimum yield strength of 60 ksi). Square tube posts shall conform with ASTM A 653, Grade 50, or ASTM A 1011, Grade 50.

8. Sign attachment bolts, washers, nuts, and spacers shall conform with ASTM A307 or A 36.

9. Install 4 lb/ft Steel U-Channel Posts with approved breakaway splice in accordance with the manufacturer's detail shown on the APL.

10. The contractor may install 3 lb/ft Steel U-Channel Posts with approved breakaway splice in accordance with the manufacturer's detail shown on the APL.

11. Install all posts plumb.

12. The contractor may set posts in preformed holes to the specified depth with suitable backfill tamped securely on all sides, or drive 3 lb/ft sign posts and any size base post in accordance with the manufacturer's detail shown on the APL.

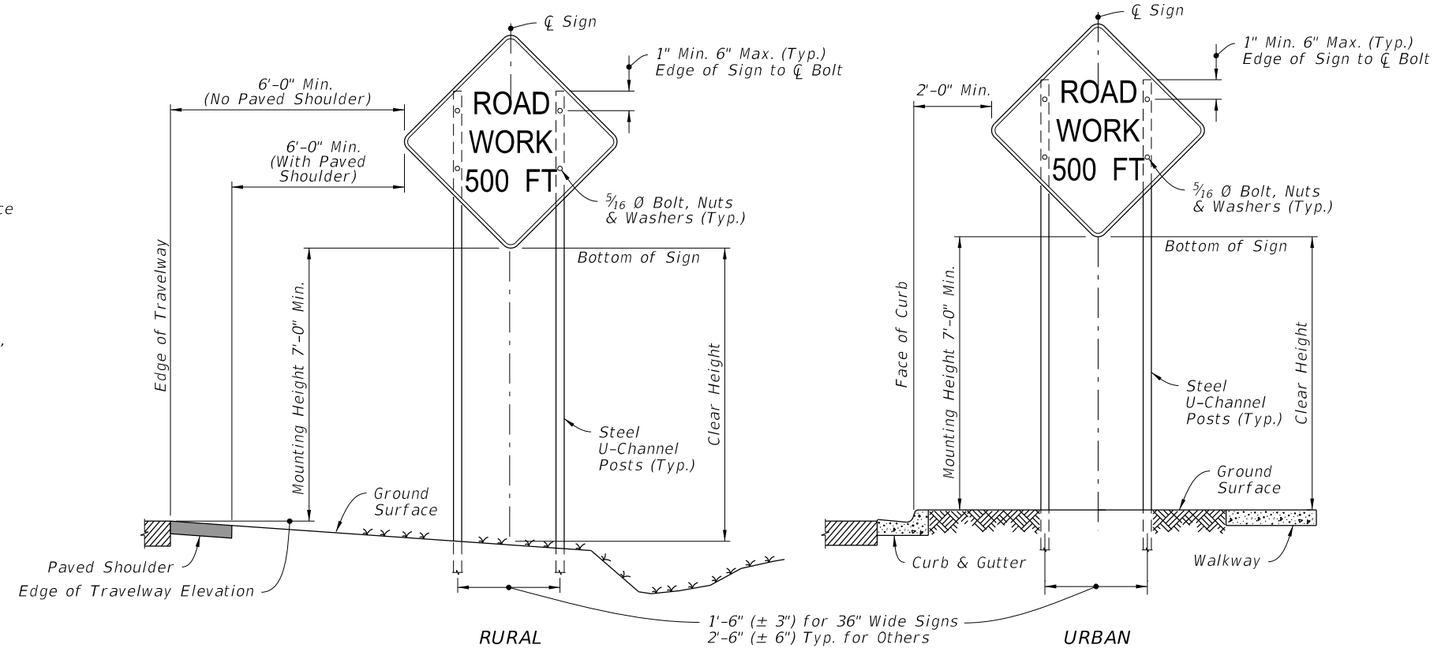

2 POST SIGN SUPPORT MOUNTING DETAILS
(SINGLE POST SIMILAR)

Where:
W = 48": a = 1' - 4½" (± 1")
W = 72": a = 2' - 1" (± 1")

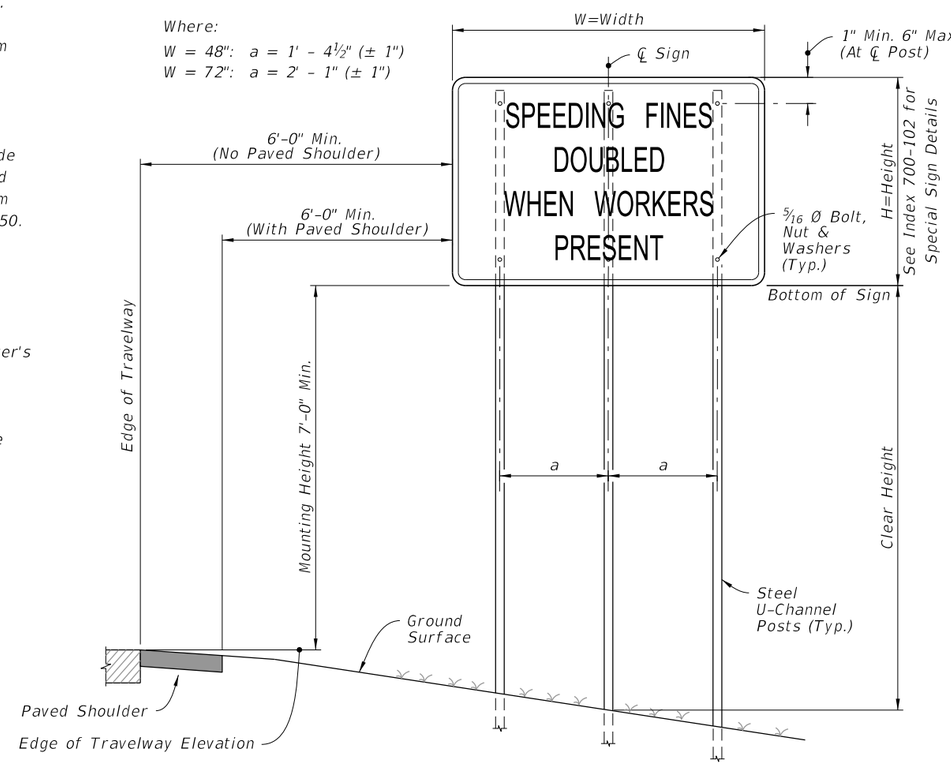

3 POST SIGN SUPPORT MOUNTING DETAILS

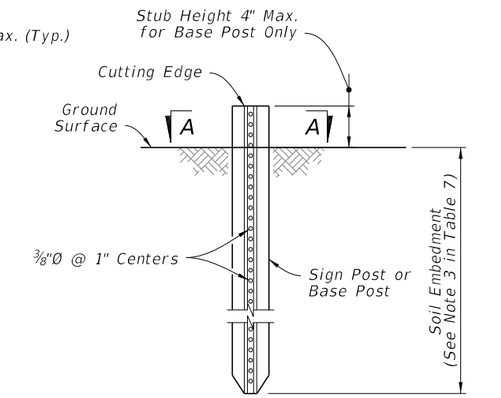

See APL for post, splice and connection details.
No bolts installed closer than 1" to cutting edge.

FOUNDATION DETAIL

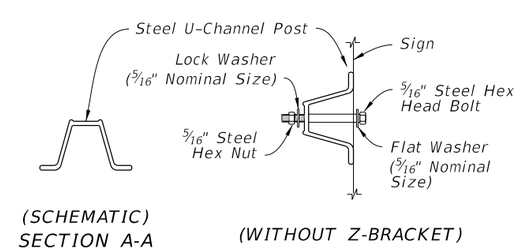

SIGN ATTACHMENT DETAIL

TABLE 7
POST AND FOUNDATION TABLE FOR WORK ZONE SIGNS

SIGN SHAPE	SIGN SIZE (inches)	NUMBER OF STEEL U CHANNEL POSTS
Octagon	30x30	1
Triangle	36x36x36	1
	48x48x48	1
	60x60x60	2
Rectangle (W x H)	24x18	1
	24x30	1
	30x24	1
	36x18	1
	36x24	1
	48x18	1
	48x24	1
	36x48	2
	48x30	2
	48x36	2
	54x36	2
	48x60	3
	72x48	3
Square	30x30	1
	36x36	2
	48x48	2
Diamond	48x48	2
Circle	36Ø	2

Notes For Table:

1. Use 3 lb/ft posts for Clear Height up to 10' and 4 lb/ft posts for Clear Height up to 12'.

2. Minimum foundation depth is 4.0' for 3 lb/ft posts and 4.5' for 4 lb/ft posts.

3. For both 3 lb/ft and 4 lb/ft base or sign posts installed in rock, a minimum cumulative depth of 2' of rock layer is required.

4. The soil plate as shown on the APL vendor drawing is not required for base posts or sign posts installed in existing rock (as defined in Note 3), asphalt roadway, shoulder pavement or soil under sidewalk.

5. For diamond warning signs with supplement plaque (up to 5 ft² in area), use 4 lb/ft posts for up to 10 ft Clear Height (measure to the bottom of diamond warning sign).

10:54:09 AM
10/3/2023

WORK ZONE SIGN SUPPORTS

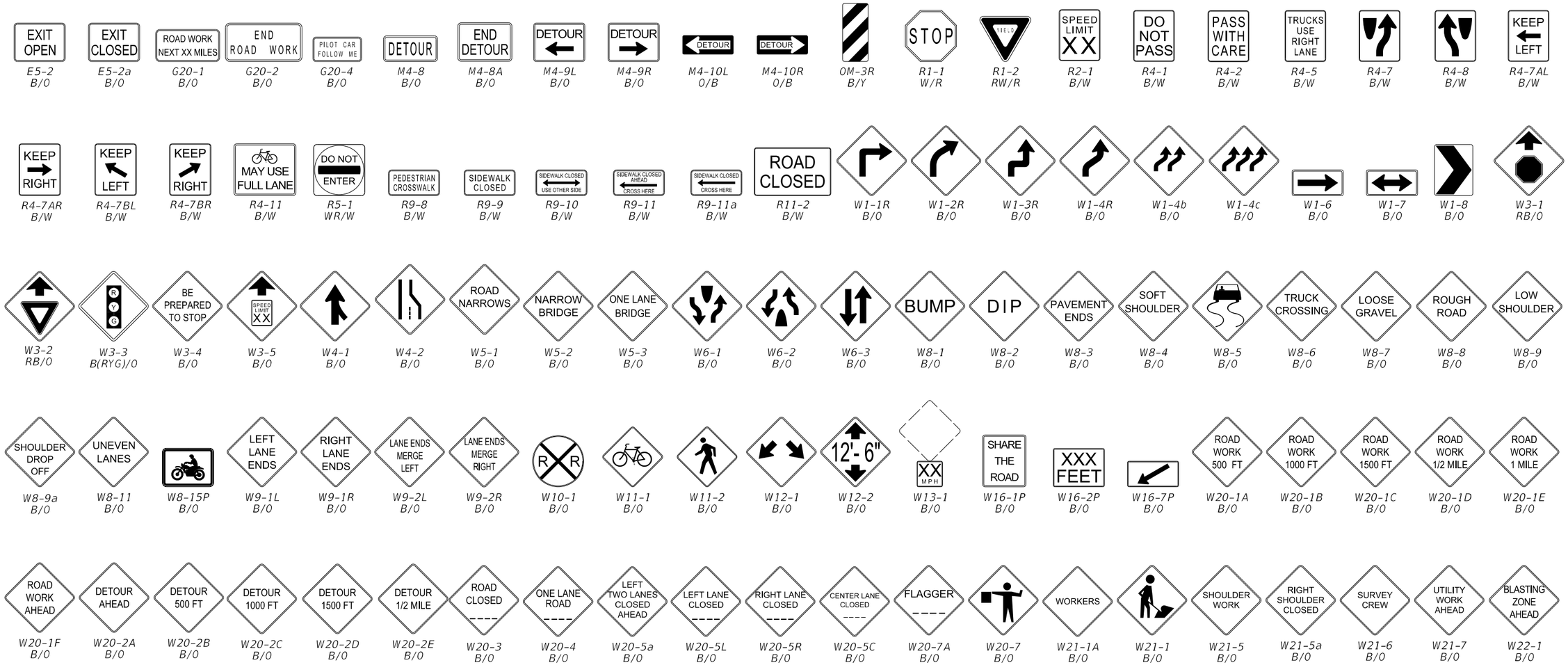

NOTES:

1. The size of diamond shaped Temporary Traffic Control (TTC) warning signs shall be a minimum of 48" X 48".
2. Fluorescent orange shall be used for all orange colored work zone signs.
3. The sign shields, symbols and messages contained on this sheet are provided for ready reference to those signs used in the development of the 102 Series of Indexes and are commonly used in the development of traffic control plans. For additional signs and sign detail information refer to the STANDARD HIGHWAY SIGNS MANUAL as specified in the MUTCD. Special signs for traffic control plans will be as approved by the State Traffic Plans Engineer.

   The sign codes shown on this sheet are for the purpose of identifying cell names found in the Traffic Control Cell Library (TCZ.Cel).

   The STANDARD HIGHWAY SIGNS MANUAL should be referenced for the official sign codes for use in the development of traffic control plans.

   See Index 700-102 for MOT sign details.

COLOR CODES:

Legend and/or
Symbol Background

R-Red (Reflectorized)
Y-Yellow (Reflectorized)
G-Green (Reflectorized)
O-Orange (Reflectorized)
B-Black (Non-Reflectorized)
W-White (Reflectorized)

10:54:16 AM
10/3/2023

COMMONLY USED WARNING AND REGULATORY SIGNS IN WORK ZONES

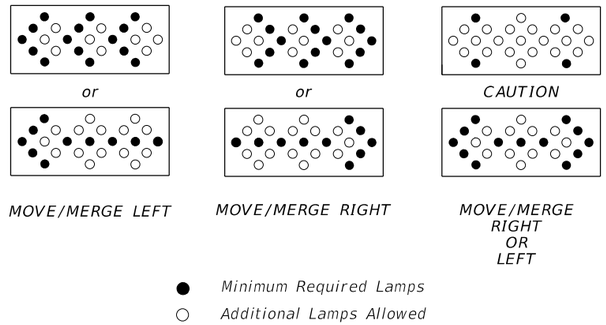

MODES

NOTES:

An arrow board in the arrow or chevron mode shall be used only for stationary or moving lane closures on multilane roadways.

For shoulder work, blocking the shoulder, for roadside work near the shoulder, or for temporarily closing one lane on a two-lane, two-way roadway, an arrow board shall be used only in the caution mode.

A single arrow board shall not be used to merge traffic laterally more than one lane. When arrow boards are used to close multiple lanes, a single board shall be used at the merging taper for each closed lane.

When Advance Warning Arrow Boards are used at night, the intensity of the flashers shall be reduced during darkness when lower intensities are desirable.

ADVANCE WARNING ARROW BOARDS

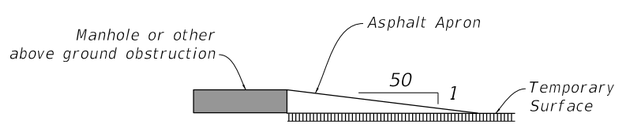

NOTES:

Manholes extending 1" or more above the travel lane and crosswalks having an uneven surface greater than ¼" shall have a temporary asphalt apron constructed as shown above.

All transverse joints that have a difference in elevation of 1" or more shall have a temporary asphalt apron constructed as shown above.

The apron is to be removed prior to constructing the next lift of asphalt. The cost of the temporary asphalt shall be included in the contract unit price for Maintenance of Traffic, LS.

MANHOLES/CROSSWALKS/JOINTS

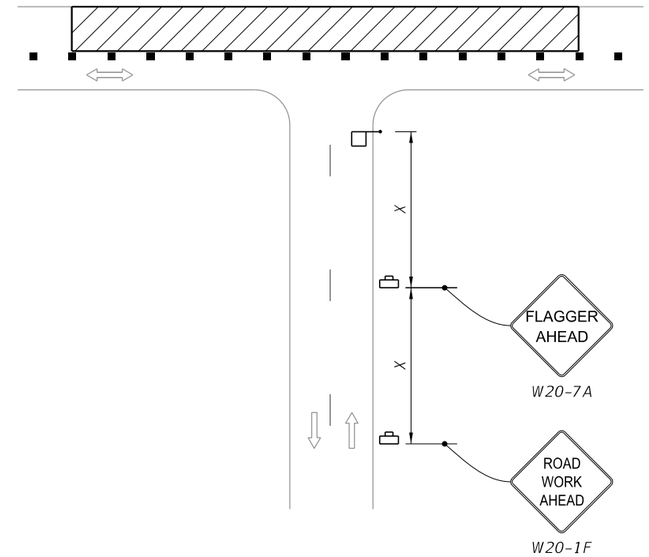

NOTE:

Optionally, use "Flagger Ahead" sign with text (W20-7A) instead of "Flagger Ahead" sign with symbol (W20-7).

SIDE ROAD INTERSECTING THE WORK ZONE

SIGNALS:

Existing traffic signal operations that require modification in order to carry out work zone traffic control shall be included in the Plans and be approved by the District Traffic Operations Engineer.

Refer to Specification 102-9 for additional information.

CHANNELIZING DEVICES:

Channelizing devices for work zone traffic control shall be as prescribed in Part VI of the MUTCD, subject to supplemental revisions provided in the contract documents and the 102 Series of Indexes. Lighting Devices must not be used to supplement channelization. Omit tapers and channelizing devices for paved shoulders less than 4' in width.

CHANNELIZING DEVICE CONSISTENCY:

Barricades, vertical panels, cones, tubular markers and drums shall not be intermixed within either the lateral transition or within the tangent alignment.

TRUCK/TRAILER-MOUNTED ATTENUATORS:

Truck/Trailer-mounted attenuators (TMA) can be used for moving operations and short-term stationary operations. For moving operations, see Index 102-607. For short-term, stationary operations, see Part VI of the MUTCD.

DROP-OFF CONDITION NOTES

1. These conditions and treatments can be applied only in work areas that fall within a properly signed work zone.

2. When drop-offs occur within the clear zone due to construction or maintenance activities, protection devices are required (See Table 8). A drop-off is defined as a drop in elevation, parallel to the adjacent travel lanes, greater than 3" with slope (A:B) steeper than 1:4. In superelevated sections, the algebraic difference in slopes should not exceed 0.25 (See Drop-off Condition Detail).

3. Drop-offs may be mitigated by placement of slopes with optional base material per Specifications Section 285. Slopes shallower than 1:4 may be required to avoid algebraic difference in slopes greater than 0.25. Include the cost for the placement and removal of the material in Maintenance of Traffic, LS. Use of this treatment in lieu of a temporary barrier is not eligible for CSIP consideration. Conduct daily inspections for deficiencies related to erosion, excessive slopes, rutting or other adverse conditions. Repair any deficiencies immediately.

4. For Setback Distance, refer to the Index or Approved Products List (APL) drawing of the selected barrier.

5. For Conditions 1 and 3 provided in Table 8, any drop-off condition that is created and restored within the same work period will not be subject to use of temporary barriers; however, channelizing devices will be required.

6. When permanent curb heights are ≥ 6", no channelizing device will be required. For curb heights < 6", see Table 8.

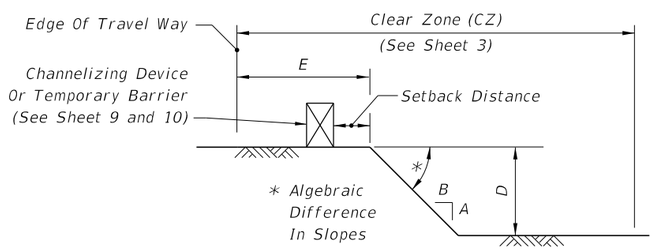

DROP-OFF CONDITION DETAIL

Table 8 Drop-off Protection Requirements			
Condition	E (ft)	D (in.)	Device Required
1	0-12	> 3	Temporary Barrier
2	> 12-CZ	> 3 to ≤ 5	Channelizing Device
3	0-CZ	> 5	Temporary Barrier
4	Removal of Bridge or Retaining Wall Barrier		Temporary Barrier
5	Removal of portions of Bridge Deck		Temporary Barrier

TRAVEL LANE TREATMENT FOR MILLING OR RESURFACING NOTES

1. This treatment applies to resurfacing or milling operations between adjacent travel lanes.

2. Whenever there is a difference in elevation between adjacent travel lanes, the W8-11 sign with "UNEVEN LANES" is required at intervals of ½ mile maximum.

3. If D is 1½" or less, no treatment is required.

4. Treatment allowed only when D is 3" or less.

5. If the slope is steeper than 1:4 (not to be steeper than 1:1), the R4-1 and MOT-1-06 signs shall be used as a supplement to the W8-11; this condition should never exceed 3 miles in length.

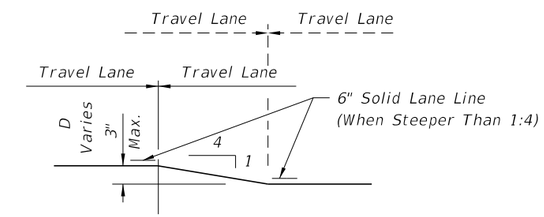

TRAVEL LANE TREATMENT FOR MILLING OR RESURFACING DETAIL

PEDESTRIAN WAY DROP-OFF CONDITION NOTES

1. A pedestrian way drop-off is defined as:

   a. a drop in elevation greater than 10" that is closer than 2' from the edge of the pedestrian way

   b. a slope steeper than 1:2 that begins closer than 2' from the edge of the pedestrian way when the total drop-off is greater than 60"

2. Protect any drop-off adjacent to a pedestrian way with pedestrian longitudinal channelizing devices, temporary barrier wall, or approved handrail.

DROP-OFFS IN WORK ZONES

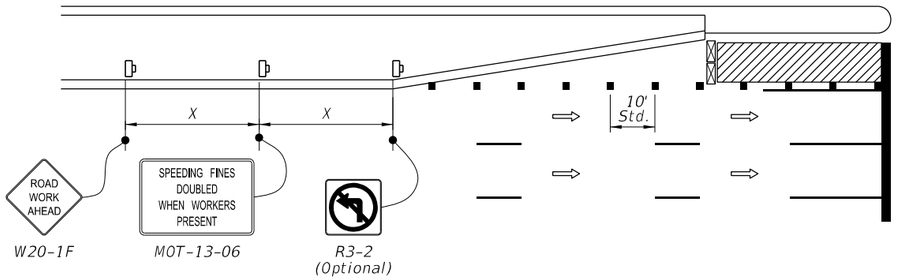

NOTES:

1. X = Work Zone Sign Spacing (See Table 3).

2. The SPEEDING FINES DOUBLE WHEN WORKERS PRESENT sign (MOT-13-06) may be omitted when work operation will be in place for 24 hours or less.

AUXILIARY LANE CLOSURE

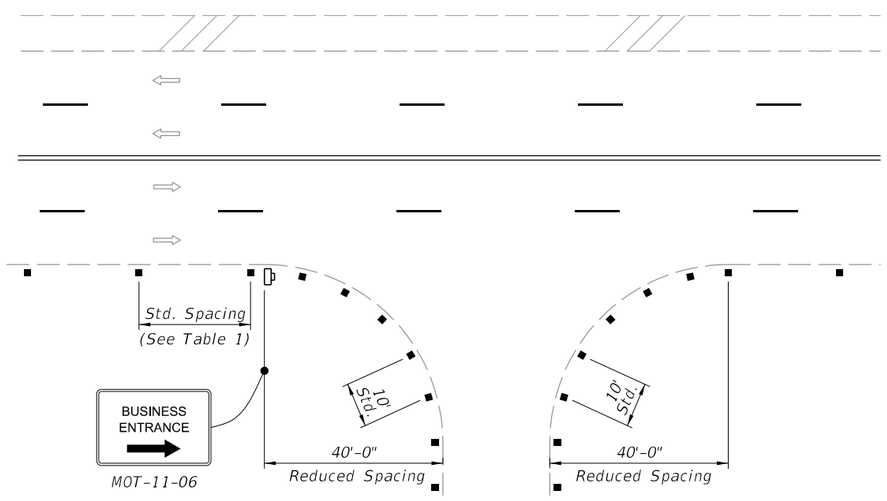

NOTES:

1. For single business entrances, place one 24" x 36" BUSINESS ENTRANCE sign (MOT-11-06) showing the specific business name for each affected driveway entrance. Logos may be provided by business owners. Standard BUSINESS ENTRANCE sign (MOT-11-06) may be used when approved by the Engineer.

2. When several businesses share a common driveway entrance, place one 24" x 36" standard BUSINESS ENTRANCE sign (MOT-11-06) in accordance with Index 700-102 at the common driveway entrance.

3. Channelizing devices shall be placed at a reduced spacing on each side of the driveway entrance, but shall not restrict sight distance for the driveway users.

4. Business entrance signs are intended to guide motorist to business entrances moved/modified or disturbed during construction projects. Business entrance signs are not required where there is minimal disruption to business driveways which is often the case with resurfacing type projects.

BUSINESS ENTRANCE SIGNS AND CHANNELIZING DEVICES PLACEMENT AT BUSINESS ENTRANCE

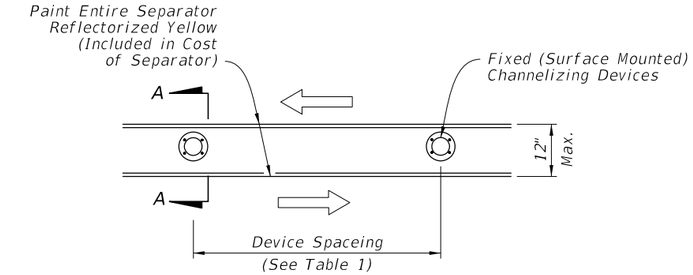

PLAN

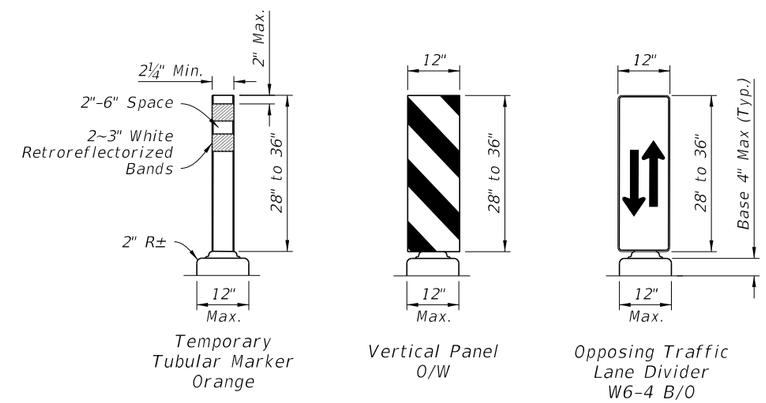

SECTION A-A

NOTES:

1. Temporary lane separators shall be supplemented with any of the following approved fixed (surface mounted) channelizing devices: temporary tubular markers, vertical panels, or opposing traffic lane divider panels. Opposing traffic lane divider panels (W6-4) shall only be used as center lane dividers to separate opposing vehicular traffic on a two-lane, two-way operation. Temporary Tubular Markers, Vertical Panels and Opposing Traffic Lane Divider panels shall not be intermixed within the limits where the temporary lane separator is used. The connection between the channelizing device and the temporary lane separator curb shall hold the channelizing device in a vertical position.

2. Reflectorized materials shall have a smooth sealed outer surface which will display the same approximate color day and night. Furnish channelizing devices having retroreflective sheeting meeting the requirements of Section 990.

3. 12" openings for drainage shall be constructed in the asphalt and portable temporary lane separator at a maximum spacing of 25' in areas with grades of 1% or less or 50' in areas with grades over 1% as directed by the Engineer.

4. Tapered ends shall be used at the beginning and end of each run of the temporary lane separator to form a gradual increase in height from the pavement level to the top of the temporary lane separator.

5. The Contractor has the option of using portable temporary lane separators containing fixed channelizing devices in lieu of the temporary asphalt separator and channelizing devices detailed on this sheet. The portable temporary lane separator shall come in portable sections that can be connected to maintain continuous alignment between the separate curb sections. Each temporary lane separator section shall be 36 inches to 48 inches in total length. Portable temporary lane separators shall duplicate the color of the pavement marking. Portable temporary lane separators shall be one of those listed on the Approved Products List.

FIXED CHANNELIZING DEVICES (Temporary Lane Separators)

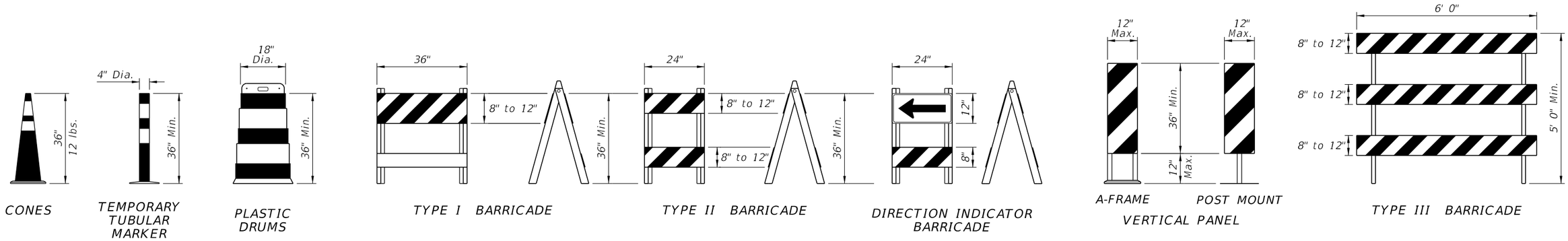

CHANNELIZING DEVICES

CHANNELIZING DEVICE NOTES:

1. The details shown on this sheet are for the following purposes:
   a. For ease of identification and
   b. To provide information that supplements or supersedes that provided by the MUTCD.

2. The Type III Barricade shall have a unit length of 6'-0" only. When barricades of greater lengths are required those lengths shall be in multiples of the 6'-0" unit.

3. No sign panel should be mounted on any channelizing device unless the channelizing device/sign combination was found to be crashworthy and the sign panel is mounted in accordance with the vendor drawing for the channelizing device shown on the Approved Products List (APL).

4. Ballast shall not be placed on top rails or any striped rails or higher than 13" above the driving surface.

5. The direction indicator barricade may be used in tapers and transitions where specific directional guidance to drivers is necessary. If used, direction indicator barricades shall be used in series to direct the driver through the transition and into the intended travel lane.

6. The splicing of sheeting is not permitted on channelizing devices or MOT signs.

7. For rails less than 3'-0" long, 4" stripes shall be used.

8. Cones shall:
   a. Be used only in active work zones where workers are present.
   b. Be reflectorized as per the MUTCD with Department-approved reflective collars when used at night.

9. For pedestrian longitudinal channelizing devices, the device shall have a minimum of 8" continuous detectable edging above the walkway. A gap not exceeding a height of 2" is allowed to facilitate drainage. The top surface of the device shall be a minimum height of 32" and have a ⅛" or less difference in any plane at all connection points between the devices to facilitate hand trailing. The bottom and the top surface of the device shall be in the same vertical plane. If pedestrian drop-off protection is required, the device shall have a footprint or offset of at least 2', otherwise the device must be at least 42" in height above the walkway and be anchored or ballasted to withstand a 200 lb lateral point load at the top of the device.

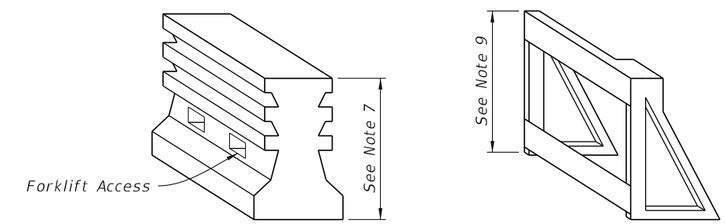

PEDESTRIAN LONGITUDINAL CHANNELIZING DEVICES

TEMPORARY BARRIER NOTES:

1. Where a barrier is specified, any of the types below may be used in accordance with the applicable Index:

Index	Description
102-100	Temporary Barrier
102-120	Low Profile Barrier
536-001	Guardrail

2. Trailer Mounted Barriers may be used to provide positive protection for workers within the work areas. APL drawings may be used as a guide to develop project specific Temporary Traffic Control Plans that are signed and sealed by the Contractor's Engineer.

10/3/2023 10:54:42 AM

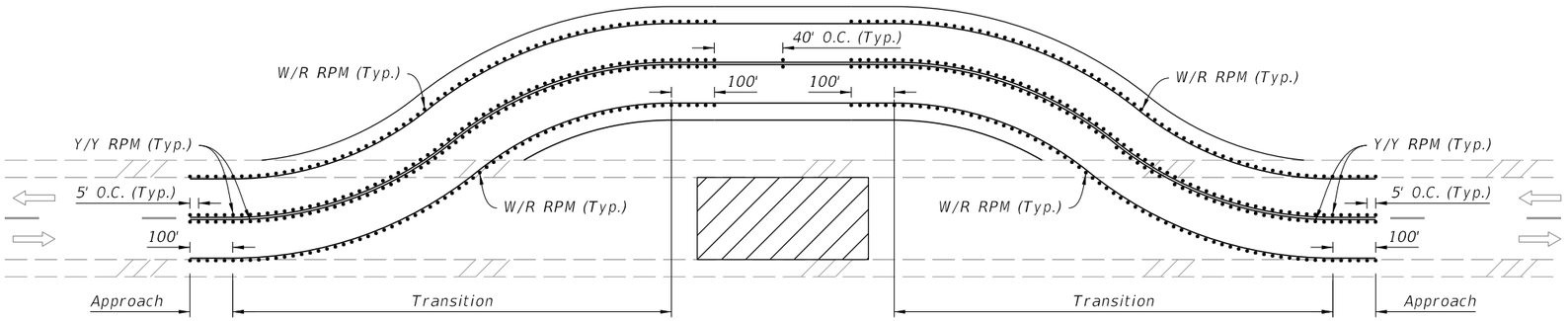

RPM PLACEMENT ON TWO-LANE ROADWAYS

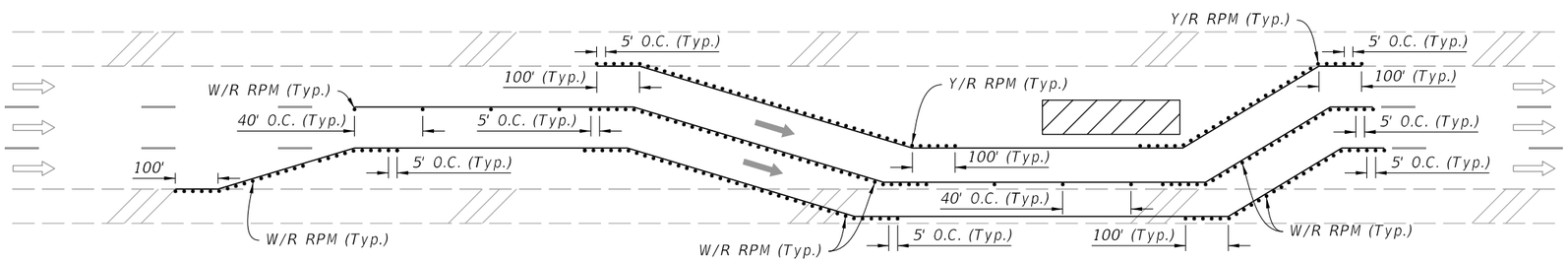

RPM PLACEMENT ON MULTILANE ROADWAYS
(Lane Shift Shown, Other Multilane Typical Applications Similar)

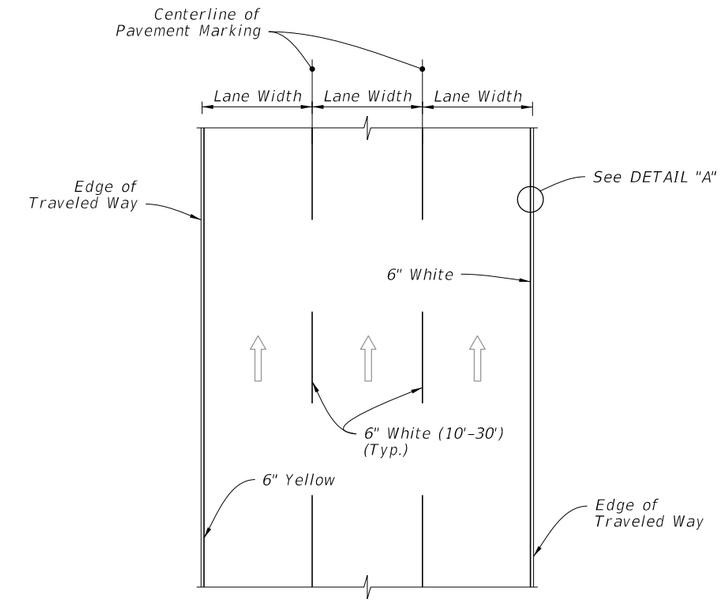

PLAN VIEW

NOTES:

1. Install RPMs as a supplement to:
   a. All lane lines
   b. Edge lines in transitions (e.g., merges, diversions, lane shifts)
   c. Edge lines of gore areas

2. Extend pavement marking and 5' RPM spacing by 100' in each direction for all transitions regardless of the line type.

3. Place RPMs in accordance with this detail and Index 706-001.

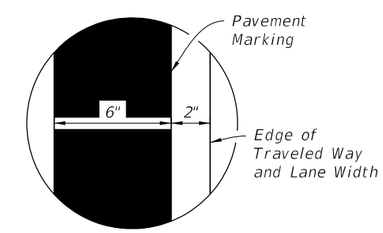

DETAIL "A"

RPM PLACEMENT IN WORK ZONES

PAVEMENT MARKINGS PLACEMENT

10:54:49 AM

10/3/2023

WORK ZONE PAVEMENT MARKINGS

LAST REVISION	REVISION	DESCRIPTION:				INDEX	SHEET
11/01/23			FDOT	FY 2024-25 STANDARD PLANS	GENERAL INFORMATION FOR TRAFFIC CONTROL THROUGH WORK ZONES	102-600	11 of 11

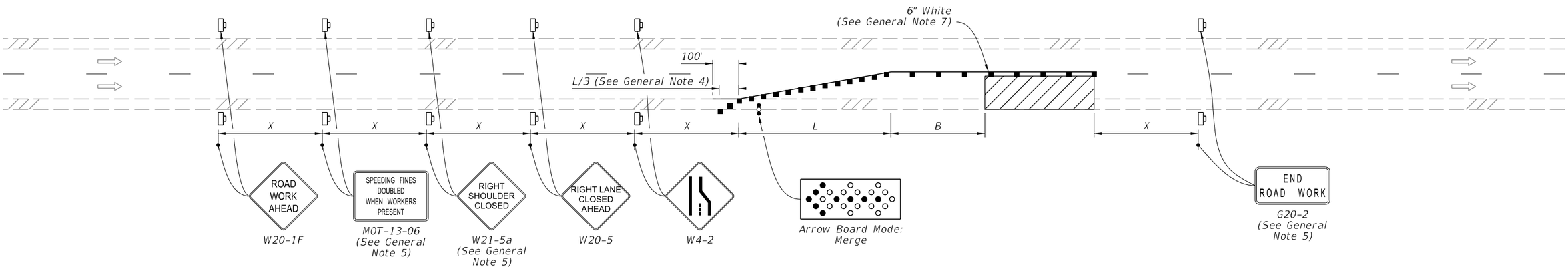

SINGLE LANE CLOSURE

SYMBOLS:

- Work Area
- Channelizing Device (See Index 102-600)
- Work Zone Sign
- Arrow Board
- Lane Identification and Direction of Traffic

GENERAL NOTE:

1. L = Taper Length
   B = Buffer Length
   X = Work Zone Sign Distance
   See Index 102-600 for "L", "B", "X", and channelizing device spacing values.

2. On undivided highways the median signs as shown are to be omitted.

3. On limited access facilities, omit "Right Shoulder Closed" signs (W21-5a) and associated work zone sign spacing distances.

4. If the paved shoulder is less than 4' in width, omit the taper and channelizing devices from the paved shoulder.

5. The "Speeding Fines Doubled When Workers Present" signs (MOT-13-06) and "End Road Work" signs (G20-2) and "Right Shoulder Closed" (W21-5a), along with associated work zone sign distances, may be omitted when the work operation will be in place for 24 hours or less. For Single Lane Closures, arrow boards and buffer (B) may also be omitted when the work operation will be in place for 60 minutes or less and the speed limit is 45 mph or less.

6. Use inverted plan of the illustrations for work on left side of roadways.

7. Temporary pavement markings may be omitted when the work operation is in place for 3 days or less.

9/28/2023 8:28:49 AM

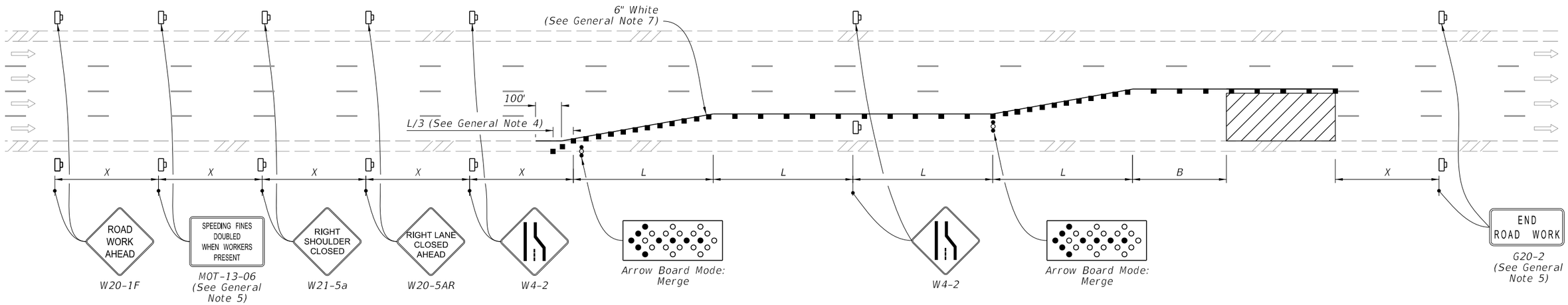

DOUBLE LANE CLOSURE

SYMBOLS:

- Work Area
- Channelizing Device (See Index 102-600)
- Work Zone Sign
- Arrow Board
- Lane Identification and Direction of Traffic

9/28/2023 8:28:53 AM

LAST REVISION	REVISION	DESCRIPTION:				
11/01/20			FY 2024-25 STANDARD PLANS	MULTILANE ROADWAY, LANE CLOSURES	INDEX 102-613	SHEET 2 of 5

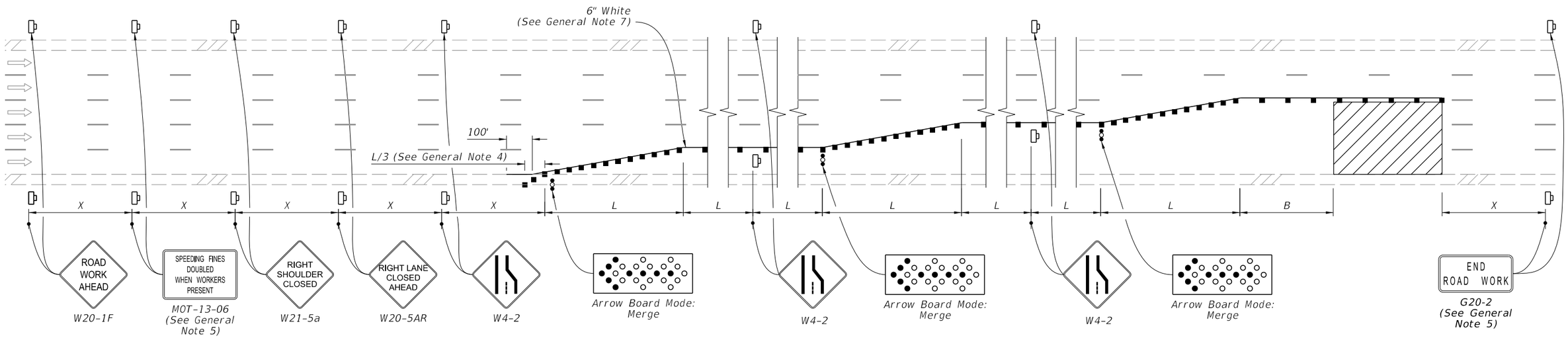

TRIPLE LANE CLOSURE

SYMBOLS:

- Work Area
- Channelizing Device (See Index 102-600)
- Work Zone Sign
- Arrow Board
- Lane Identification and Direction of Traffic

9/28/2023 8:28:57 AM

LAST REVISION	REVISION	DESCRIPTION:			INDEX	SHEET
11/01/20			FDOT FY 2024-25 STANDARD PLANS	MULTILANE ROADWAY, LANE CLOSURES	102-613	3 of 5

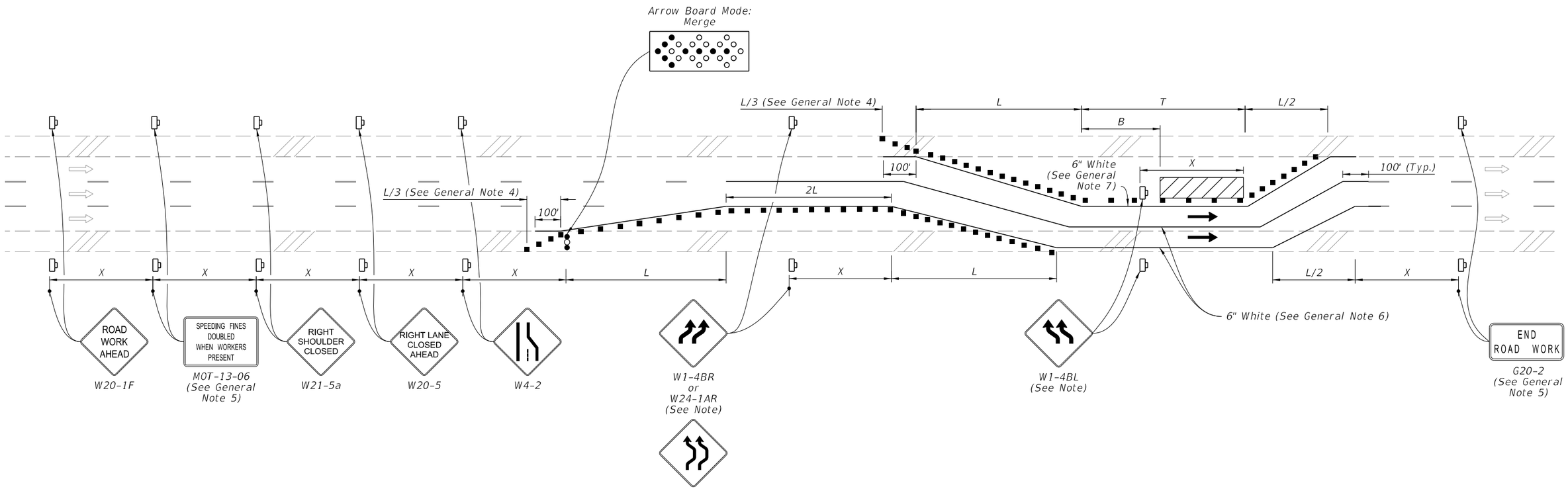

LANE CLOSURE WITH LANE SHIFT

NOTE:

If the tangent distance "T" is less than 600', then use "Double Reverse Curve" signs (W24-1A) instead of the first pair of "Reverse Curve" signs (W1-4B) and omit the second pair of "Reverse Curve" signs.

SYMBOLS:

- Work Area
- Channelizing Device (See Index 102-600)
- Work Zone Sign
- Arrow Board
- Lane Identification and Direction of Traffic

9/28/2023 8:29:01 AM

LAST REVISION	REVISION	DESCRIPTION:			INDEX	SHEET
11/01/20			FY 2024-25 STANDARD PLANS	MULTILANE ROADWAY, LANE CLOSURES	102-613	4 of 5

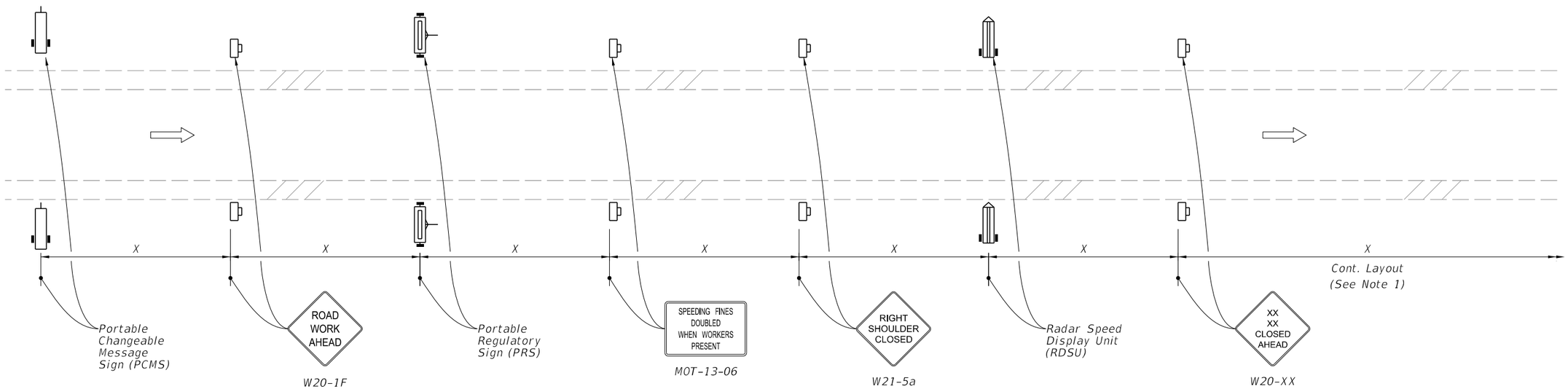

MOTORIST AWARENESS SYSTEM

SYMBOLS:

- Work Zone Sign
- (1) PCMS= Portable Changeable (Variable) Message Sign
- (2) PRS= Portable Regulatory Sign-Speed Limit When Flashing
- (2) RSDU= Radar Speed Display Unit
- Lane Identification and Direction of Traffic

NOTES:

1. Use the Motorist Awareness System (MAS) for lane closures of at least 5 days (consecutive or not) on multilane divided facilities with a posted speed of 55 mph or greater when workers are present and not protected by a barrier.

2. Locate the Motorist MAS devices (i.e., PCMS, PRS, and RDSU) within the advance warning signs as shown. Continue with the remainder of the work zone signs and devices in accordance with the Plans or Standard Plans after the appropriate "Lane Closed Ahead" (W20-XX) sign.

3. For a posted speed of 65 mph or greater, display speed with a ten mph reduction. For a posted speed of 60 mph, display a reduced speed of 55 mph. For areas outside of the lane closure, use the posted speed as the work zone speed.

4. Omit the PCMS in the median for roadways with three lanes or less in the same direction of traffic.

TYPICAL PCMS DISPLAY:

With speed reduction:
Message 1: WORKERS PRESENT AHEAD
Message 2: SPEED REDUCED NEXT XXMI

Without speed reduction:
Message 1: WORKERS PRESENT AHEAD
Message 2: NEXT XX MILES

9/28/2023 8:29:05 AM

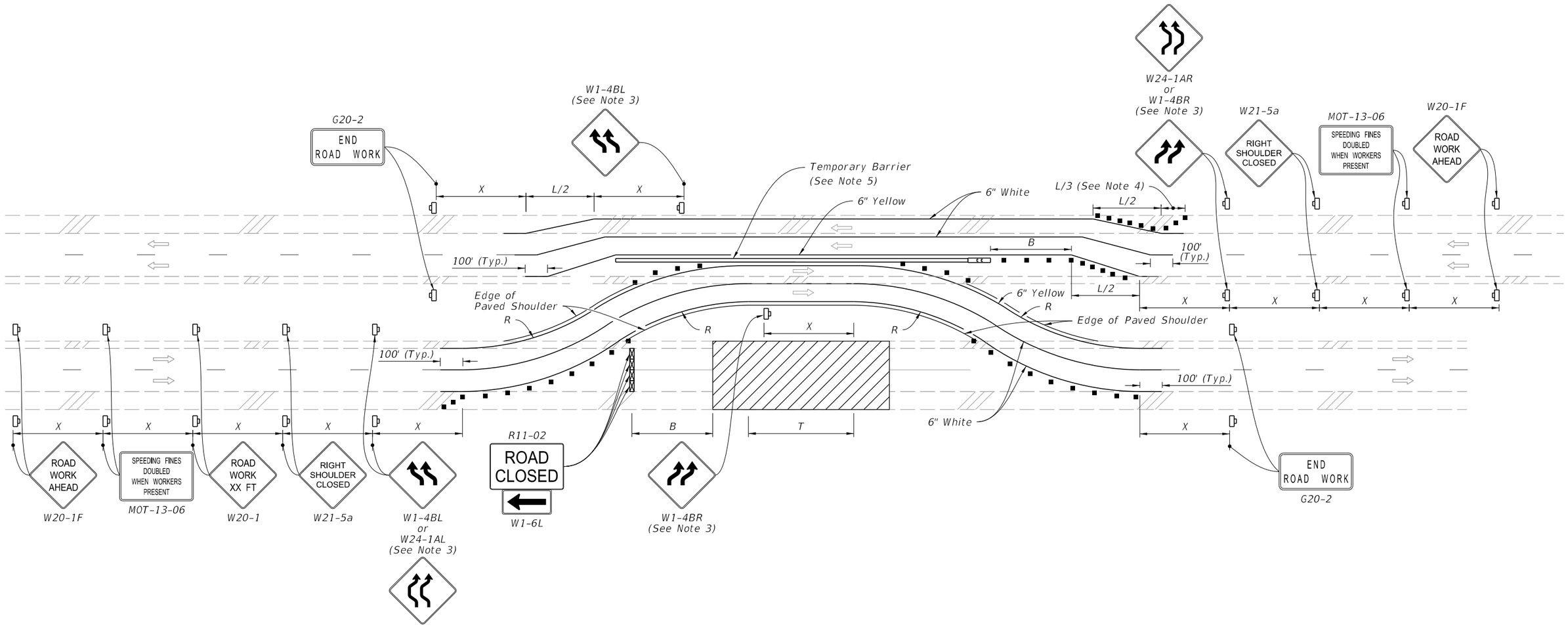

TEMPORARY DIVERSION FOR DIVIDED ROADWAYS

SYMBOLS:

- Work Area
- Channelizing Device (See Index 102-600)
- Work Zone Sign
- Type III Barricade
- Crash Cushion
- Lane Identification and Direction of Traffic

NOTES:

1. This Index applies to multilane roadways, except with undivided roadways with 6 or more lanes, where the work requires the closure of the lanes in one direction and diversion is provided to convert the opposing traffic lanes to temporary two-way travel.

2. L = Taper Length
   B = Buffer Length
   X = Work Zone Sign Distance
   R = Radius of Curve
   See Index 102-600 for "L", "B", "X", channelizing device spacing values. See Plans for "R" values.

3. For undivided roadways with a tangent distance "T" less than 600', use "Double Reverse Curve" signs (W24-1A) instead of the first pair of "Reverse Curve" signs (W1-4B) and omit the second pair of "Reverse Curve" signs.

4. If the paved shoulder is less than 4' in width, omit the taper and channelizing devices shown on the paved shoulder.

5. Temporary Lane Separator may be used in lieu of Temporary Barrier for speed limits of 45 mph or less.

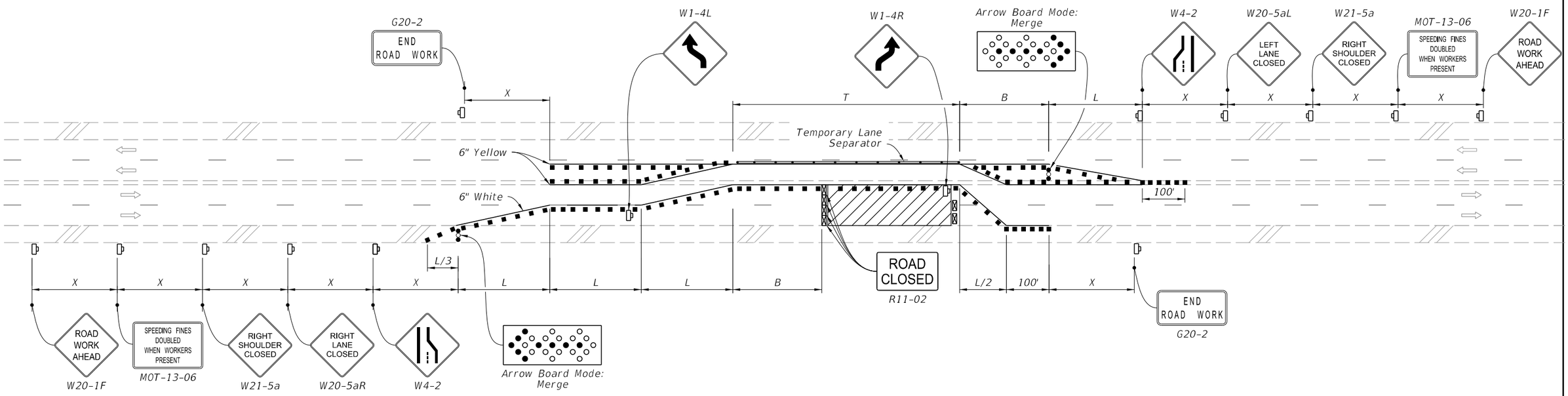

TEMPORARY DIVERSION FOR UNDIVIDED ROADWAYS

NOTE:

Temporary pavement markings may be omitted when the work operation is in place for 3 days or less.

SYMBOLS:

- Work Area
- Channelizing Device (See Index 102-600)
- Work Zone Sign
- Type III Barricade
- Crash Cushion
- Lane Identification and Direction of Traffic

9/28/2023 8:33:12 AM

LAST REVISION	REVISION	DESCRIPTION:			INDEX	SHEET
11/01/21			FDOT FY 2024-25 STANDARD PLANS	MULTILANE ROADWAY, TEMPORARY DIVERSION	102-620	2 of 2

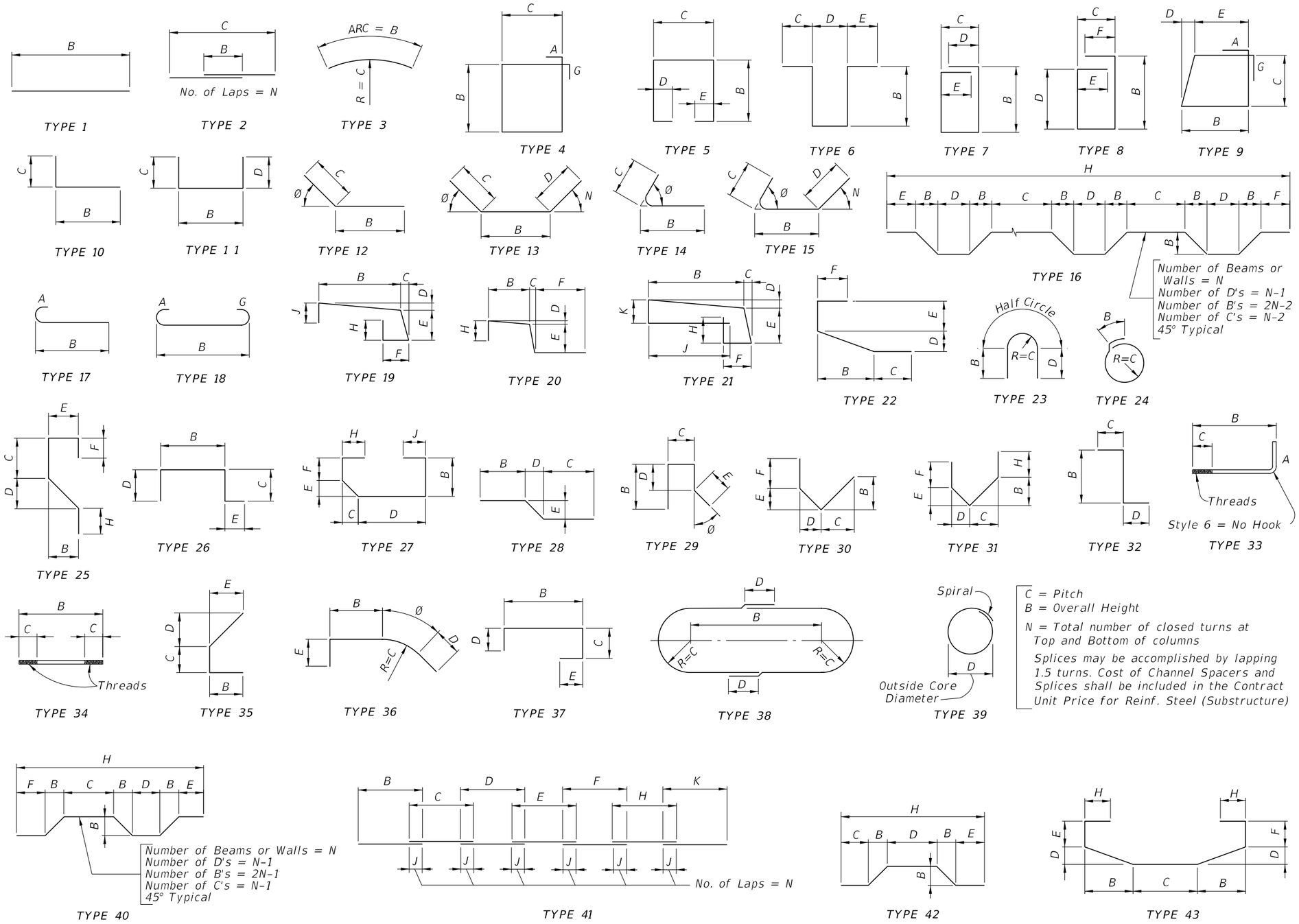

HOOK DETAILS

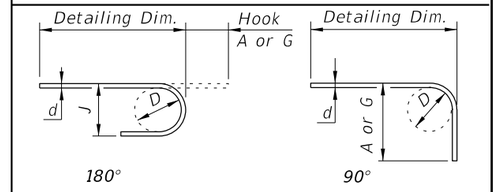

BAR SIZE	D	180° HOOKS		90° HOOKS
		A OR G	J	A OR G
#3	2¼"	5"	3"	6"
#4	3"	6"	4"	8"
#5	3¾"	7"	5"	10"
#6	4½"	8"	6"	1'-0"
#7	5¼"	10"	7"	1'-2"
#8	6"	11"	8"	1'-4"
#9	9½"	1'-3"	11¾"	1'-7"
#10	10¾"	1'-5"	1'-1¼"	1'-10"
#11	12"	1'-7"	1'-2¾"	2'-0"
#14	18¼"	2'-3"	1'-9¾"	2'-7"
#18	24"	3'-0"	2'-4½"	3'-5"
STYLE		1		3

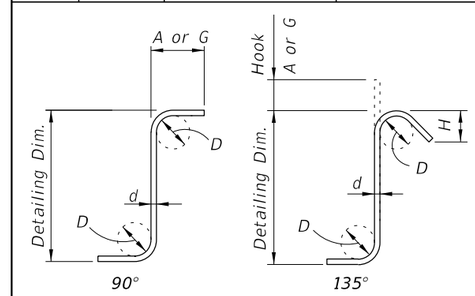

STIRRUPS (TIES SIMILAR)

STIRRUP & TIE HOOK DIMENSIONS

BAR SIZE	D	90° HOOKS	135° HOOKS	
		A or G	A or G	H *
#3	1½"	4"	4"	2½"
#4	2"	4½"	4½"	3"
#5	2½"	6"	5½"	3¾"
#6	4½"	1'-0"	8"	4½"
#7	5¼"	1'-2"	9"	5¼"
#8	6"	1'-4"	10½"	6"
STYLE		4	5	

STYLE 6 = NO HOOK

* Dimension is approximate.

Hook Styles Detailed on this sheet are for Illustration Only.

Actual Hook Style for any particular bar will be shown under A or G Heading on REINFORCING BAR LIST sheet(s) in Structures Plans.

All Dimensions are out-to-out.

NOTE: For Bar Dimensions See REINFORCING BAR LIST Sheet(s) in Structures Plans.

10/15/2023 11:22:09 AM

LAST REVISION	REVISION	DESCRIPTION:				
11/01/20			FY 2024-25 STANDARD PLANS	BAR BENDING DETAILS (STEEL)	INDEX 415-001	SHEET 1 of 1

NOTES:

1. If cabinet mounting requires relocation of hole in concrete pole, fill existing hole with concrete or cover with a noncorrosive cover plate.

2. Liquidtight flexible conduit is approved for use from the electrical disconnect to the cabinet when both are installed on the same pole.

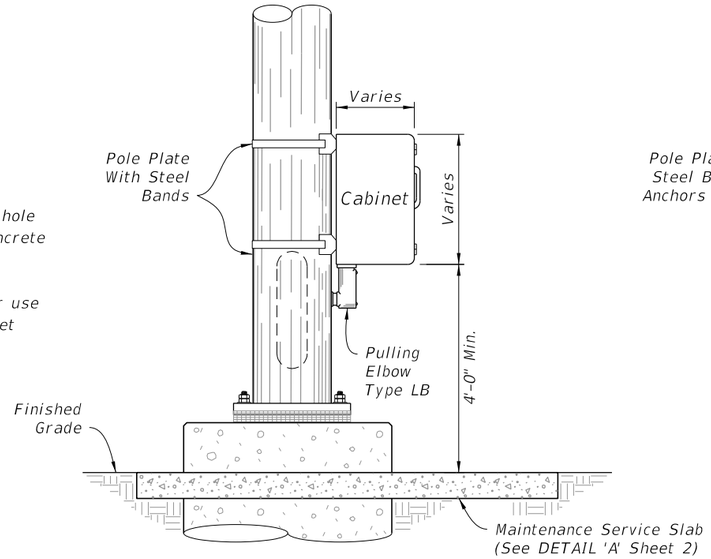

SIDE ELEVATION

METAL POLE

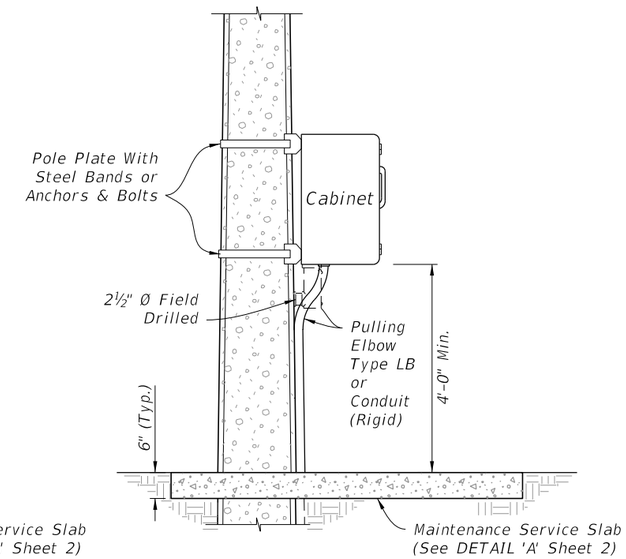

SIDE ELEVATION

CONCRETE POLE

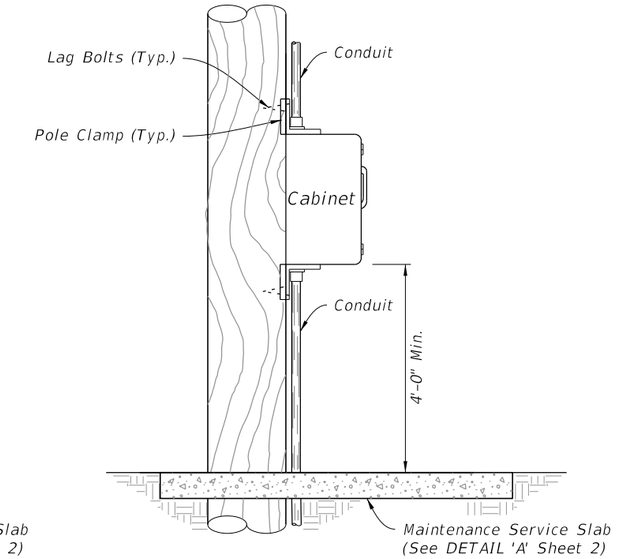

SIDE ELEVATION

WOOD POLE

POLE MOUNTED CONTROLLER CABINET

NOTES:

1. Maintenance Service Slab: Use Class NS concrete and slope ¼" to 1" for drainage. Not required in sidewalk, pavement areas, or where R/W is restricted.

2. The number, size and orientation of conduit sweep will vary according to site condition or locations. Provide two spare 2" PVC conduits in all bases. Place the exits of the spare conduits in the direction of the center rear of the cabinet base and into a pull box. If obstructions prevent the spare conduit from exiting to the rear, or the rear of the cabinet is located on the R/W line, locate as directed by the Engineer. Cap all spare conduit sweeps with a weatherproof fitting.

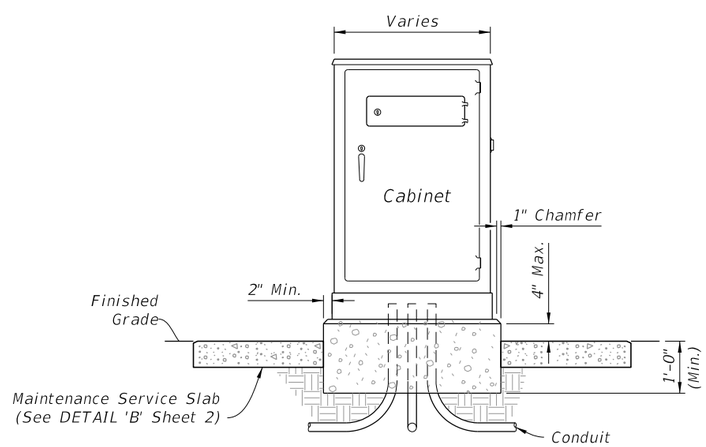

FRONT ELEVATION

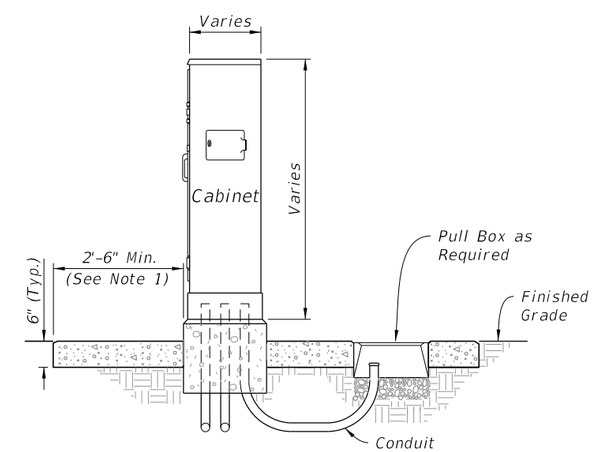

SIDE ELEVATION

NEW CONTROLLER CABINET

GROUND MOUNTED CONTROLLER CABINET

LAST REVISION	REVISION	DESCRIPTION:			INDEX	SHEET
11/01/23			FY 2024-25 STANDARD PLANS	CABINET INSTALLATION DETAILS	676-010	1 of 4

10/3/2023 2:32:32 PM

NOTES:

1. Maintenance Service Slab: Use Class NS concrete and slope ¼" to 1" for drainage. Not required in sidewalk, pavement areas, or where R/W is restricted.

2. If cabinet mounting requires relocation of hole in concrete pole, fill existing hole with concrete or cover with a noncorrosive cover plate.

3. Liquidtight flexible conduit is approved for use from the electrical disconnect to the cabinet when both are installed on the same pole.

4. Where a pull box is to be placed within the maintenance service slab, the slab width must be extended to provide for the required pull box concrete apron as detailed in Index 635-001.

5. Coordinate placement of maintenance service slab with proposed final grade. Grade and compact side slopes around the maintenance service slab to provide a stable and level working area and tie into the proposed embankment.

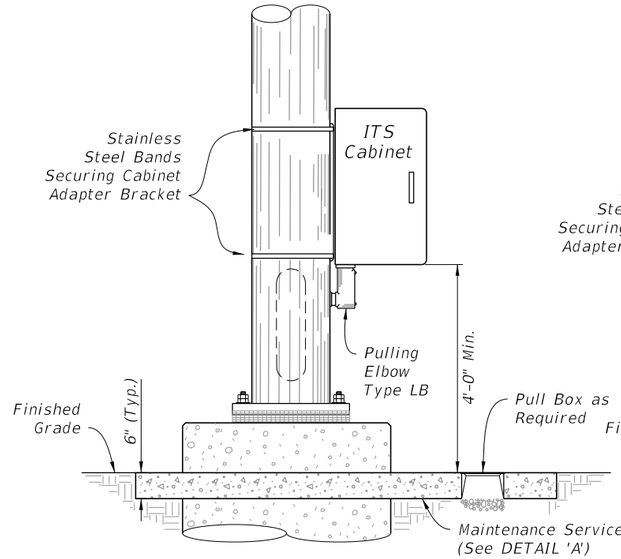

SIDE ELEVATION

METAL POLE

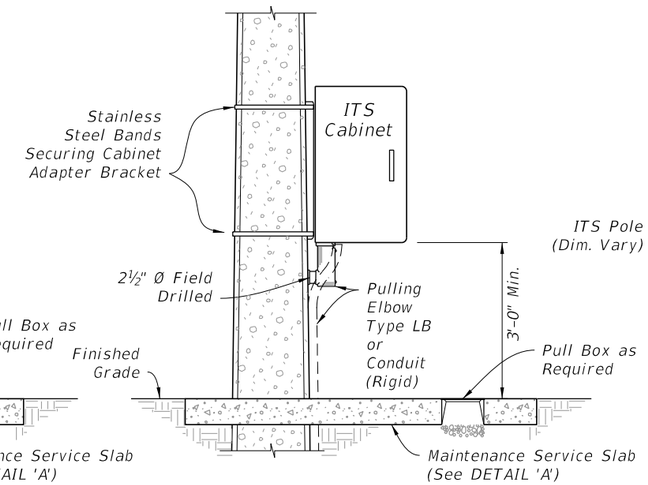

SIDE ELEVATION

CONCRETE POLE

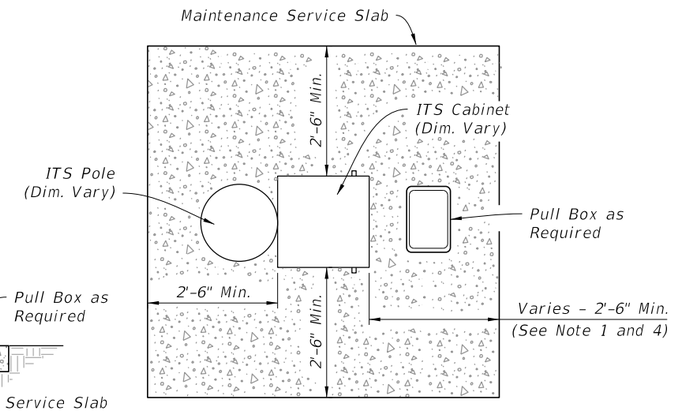

PLAN VIEW

DETAIL 'A'

POLE MOUNTED INTELLIGENT TRANSPORTATION SYSTEMS (ITS) CABINET

NOTES:

1. Maintenance Service Slab: Use Class NS concrete and slope ¼" to 1" for drainage. Not required in sidewalk, pavement areas, or where R/W is restricted.

2. The number, size and orientation of conduit sweep will vary according to site condition or locations. Provide two spare 2" PVC conduits in all bases. Place the exits of the spare conduits in the direction of the center rear of the cabinet base and into a pull box. If obstructions prevent the spare conduit from exiting to the rear, or the rear of the cabinet is located on the R/W line, locate as directed by the Engineer. Cap all spare conduit sweeps with a weatherproof fitting.

3. When a pull box is to be placed within the maintenance service slab, the slab width must be extended to provide for the required pull box apron as detailed in Index 635-001.

4. Coordinate placement of maintenance service slab with proposed final grade. Grade and compact side slopes around the maintenance service slab to provide a stable and level working area and tie into the proposed embankment.

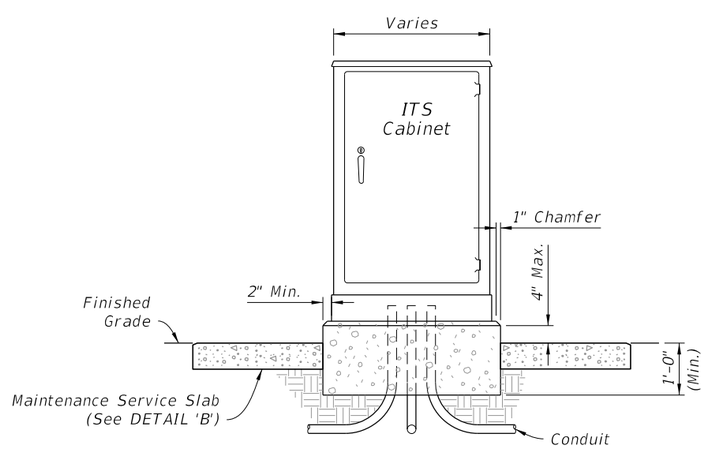

FRONT ELEVATION

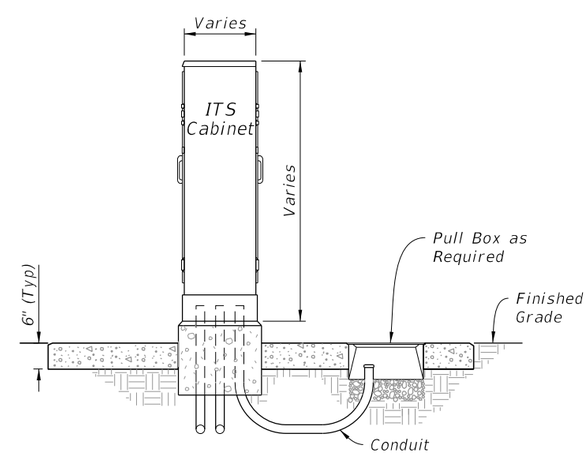

SIDE ELEVATION

NEW ITS CABINET

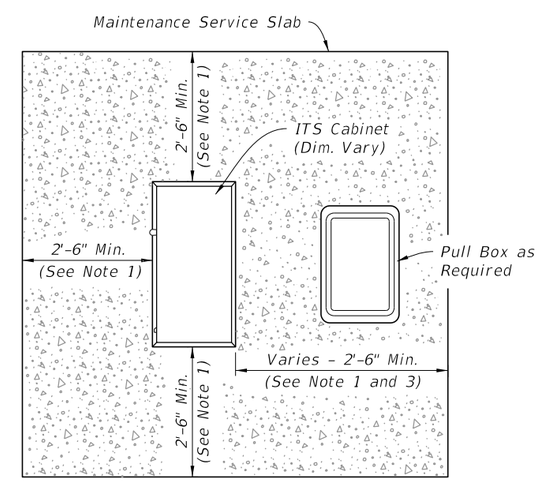

PLAN VIEW

DETAIL 'B'

GROUND MOUNTED INTELLIGENT TRANSPORTATION SYSTEMS (ITS) CABINET

10/3/2023 2:32:38 PM

LAST REVISION	REVISION	DESCRIPTION:			INDEX	SHEET
11/01/23			FDOT FY 2024-25 STANDARD PLANS	CABINET INSTALLATION DETAILS	676-010	2 of 4

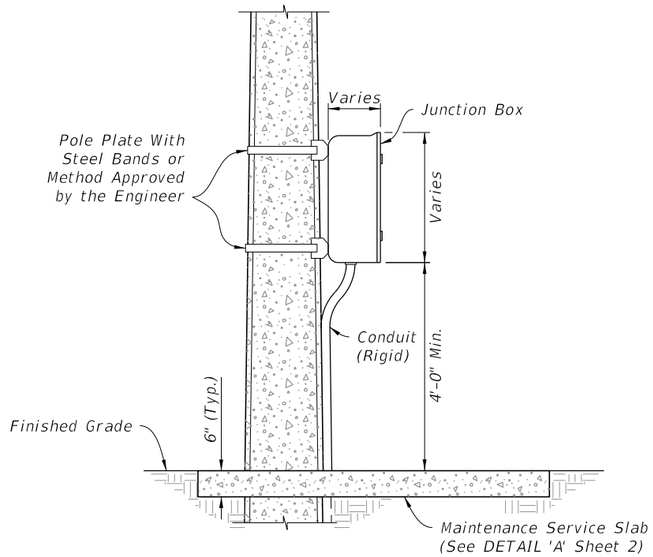

SIDE ELEVATION

POLE MOUNTED

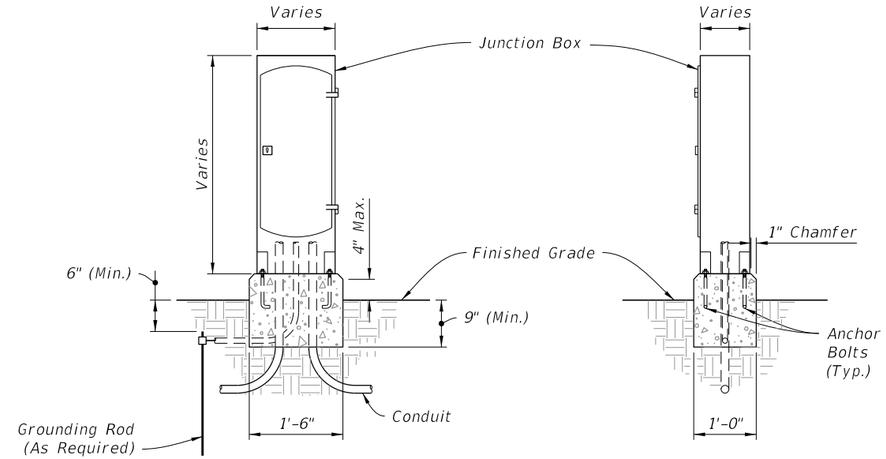

FRONT ELEVATION

SIDE ELEVATION

GROUND MOUNTED

INTERCONNECT JUNCTION BOX

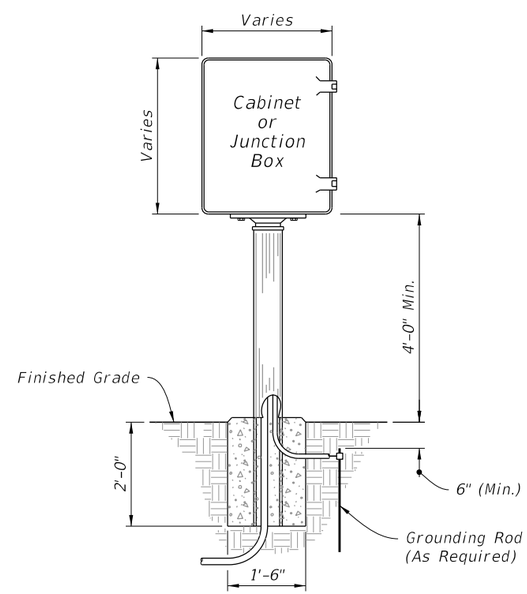

FRONT ELEVATION

PEDESTAL MOUNTED CABINET

10/3/2023 2:32:45 PM

LAST REVISION	REVISION	DESCRIPTION:			INDEX	SHEET
11/01/23			FY 2024-25 STANDARD PLANS	CABINET INSTALLATION DETAILS	676-010	3 of 4

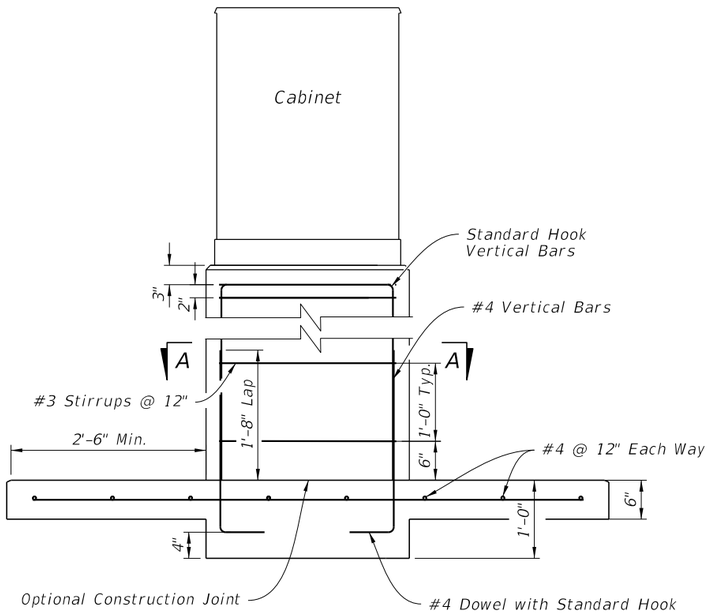

FRONT ELEVATION

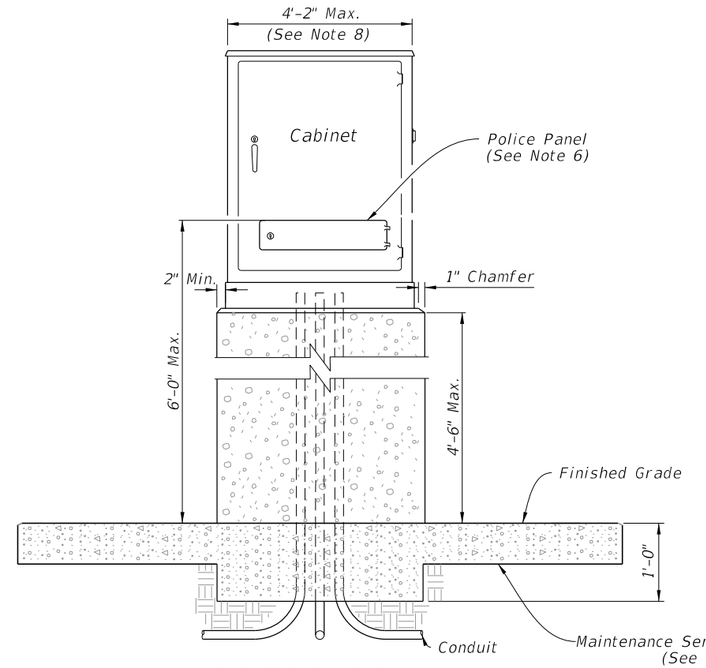

FRONT ELEVATION

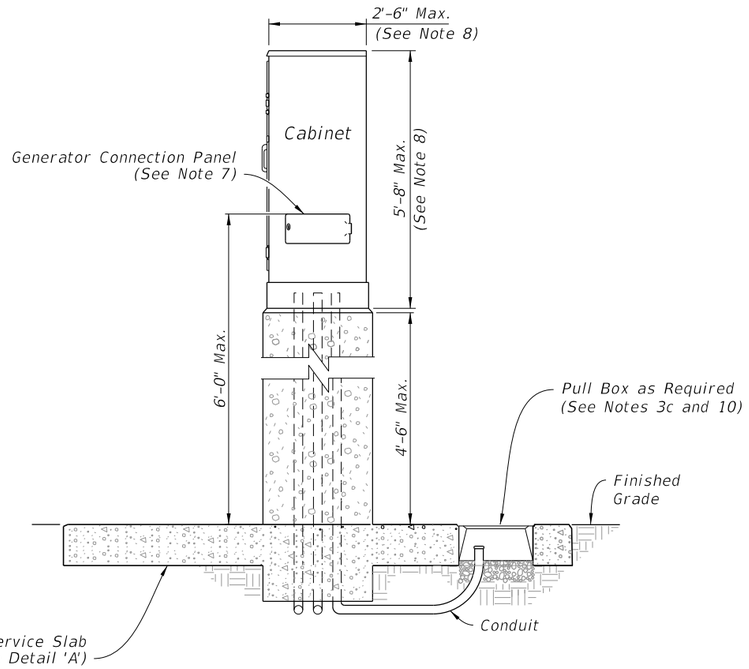

SIDE ELEVATION

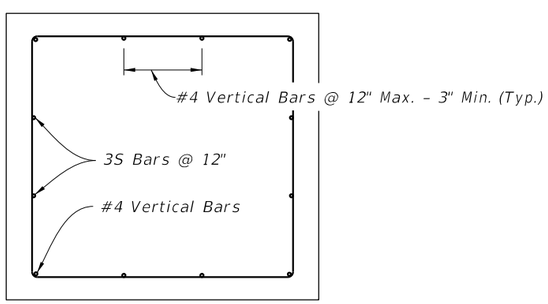

SECTION A-A

NOTES

1. Install cabinet riser as called for in the Plans. Concrete riser shown, for other options, see Specification 676.
2. Concrete:
   a. Concrete will be in accordance with Specification 346.
   b. Concrete will be Class IV.
3. Reinforcing:
   a. Reinforcing will be in accordance with Specification 415.
   b. All reinforcing steel will have a 2" minimum cover unless noted otherwise.
   c. Adjust reinforcing to facilitate Pull Box. Add equal number of bars to to either side for each bar interrupted by Pull Box.
4. Generator connection cables will be extended by the same length as the riser's height.
5. Controller cabinet depicted. ITS cabinet similar.
6. Locate Police Panel at bottom of cabinet assembly.
7. Locate generator connection panel at bottom of cabinet assembly.
8. Riser dimensions shown are based on maximum cabinet dimensions per the APL.
9. Slope maintenance slab ¼" to 1" for drainage. Not required in sidewalk, pavement areas, or where R/W is restricted.
10. When a pull box is to be placed within the maintenance service slab, the slab width must be extended to provide for the required pull box apron as detailed in Index 635-001.
11. Coordinate placement of maintenance service slab with proposed final grade. Grade and compact side slopes around the maintenance service slab to provide a stable and level working area and tie into the proposed embankment.
12. The number, size and orientation of conduit sweep will vary according to site condition or location. Provide two spare 2" PVC conduits in all bases. Place the exits of the two spare conduits in the direction of the center rear of the cabinet base and into a pull box. If obstructions prevent the spare conduit from existing to the rear, or the rear of the cabinet is located on the R/W line, locate as directed by the Engineer. Cap all spare conduit sweeps with a weatherproof fitting.

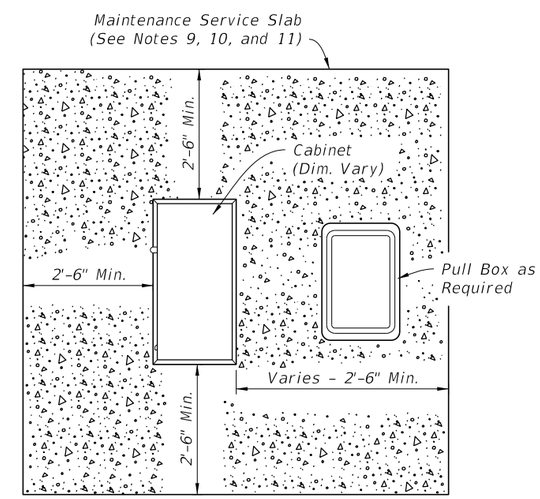

PLAN VIEW

DETAIL 'A'

GROUND MOUNTED CONTROLLER CABINET RISER

10/3/2023 2:32:52 PM

LAST REVISION	REVISION	DESCRIPTION:			INDEX	SHEET
11/01/23			FDOT FY 2024-25 STANDARD PLANS	CABINET INSTALLATION DETAILS	676-010	4 of 4