LEE COUNTY
DEPARTMENT OF TRANSPORTATION

BIG CARLOS PASS BRIDGE

PROJECT No: CN160002
(FEDERAL FUNDS)

ETDM No: 14301

LEE COUNTY

COUNTY ROAD NO. 865 (ESTERO BOULEVARD)

BRIDGE NO. 124143

INDEX OF STRUCTURE PLANS

SEE SHEET B-4 FOR INDEX OF SHEETS

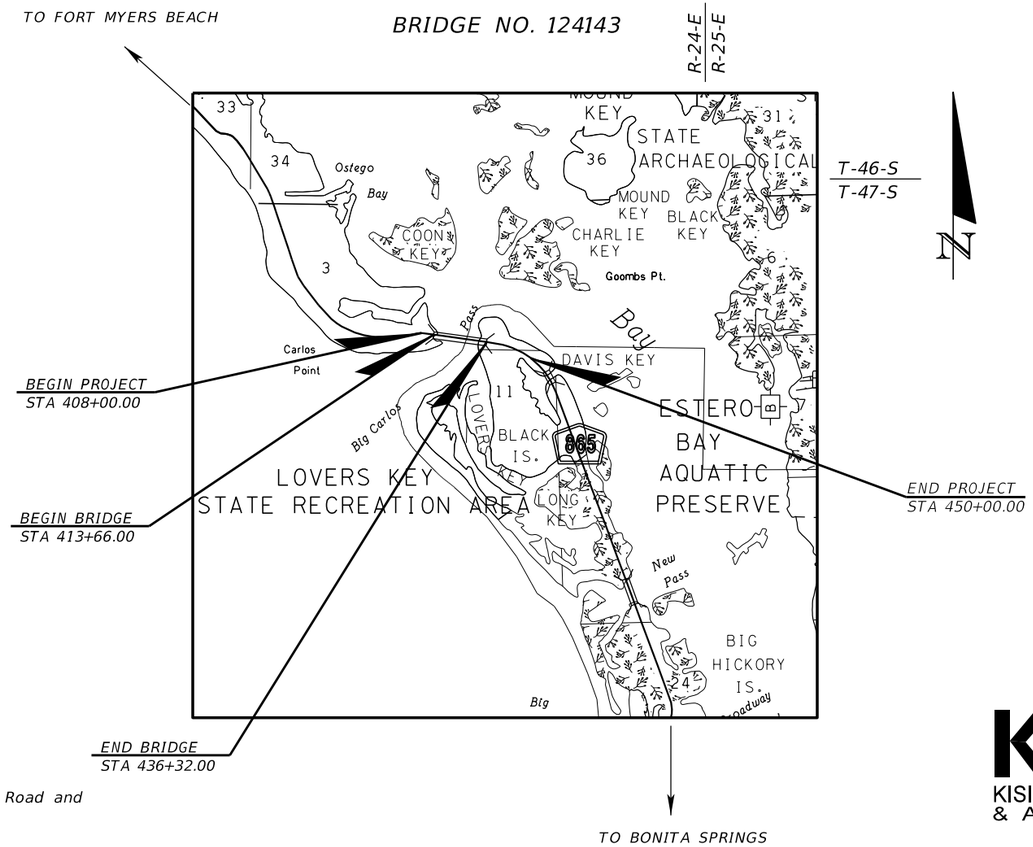

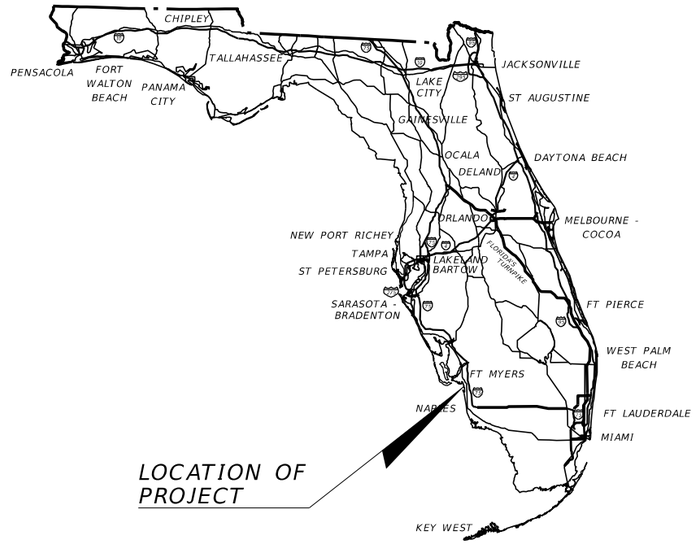

GOVERNING STANDARD PLANS:

Florida Department of Transportation, FY2022-23 Standard Plans for Road and Bridge Construction and applicable Interim Revisions (IRs).

Standard Plans for Road Construction and associated IRs are available at the following website: http://www.fdot.gov/design/standardplans

Standard Plans for Bridge Construction are included in the Structures Plans Component.

GOVERNING STANDARD SPECIFICATIONS:

Florida Department of Transportation, January 2022 Standard Specifications for Road and Bridge Construction at the following website: http://www.fdot.gov/programmanagement/Implemented/SpecBooks

KCA KISINGER CAMPO & ASSOCIATES

STRUCTURE PLANS: ENGINEER OF RECORD:

ALFREDO JOSE LAYRISSE, P.E.
P.E. No.: 75610
KISINGER CAMPO & ASSOCIATES CORP.
201 N. FRANKLIN STREET, SUITE 400
TAMPA, FLORIDA 33602
PHONE: (813) 871-5331
CONTRACT NO. C-7533
VENDOR NO. 59-1677145

LEE COUNTY PROJECT MANAGER:

THOMAS J. MARQUARDT, P.E.

THE OFFICIAL RECORD OF THIS SHEET IS THE ELECTRONIC FILE DIGITALLY SIGNED AND SEALED UNDER RULE 61G15-23.004, F.A.C.

SHEET NO.
B-1

ALFREDO JOSE LAYRISSE
LICENSE
No 75610
STATE OF
FLORIDA
PROFESSIONAL ENGINEER

THIS ITEM HAS BEEN DIGITALLY SIGNED AND SEALED BY

Alfredo J Layrisse 2022.02.24 16:53:44 -05'00'

ON THE DATE ADJACENT TO THE SEAL.

PRINTED COPIES OF THIS DOCUMENT ARE NOT CONSIDERED SIGNED AND SEALED AND THE SIGNATURE MUST BE VERIFIED ON ANY ELECTRONIC COPIES.

Kisinger Campo & Associates Corp.
201 N. Franklin Street
Suite 400
Tampa, FL 33602
Alfredo J. Layrisse, PE No. 75610

THE ABOVE NAMED PROFESSIONAL ENGINEER SHALL BE RESPONSIBLE FOR THE FOLLOWING SHEETS IN ACCORDANCE WITH RULE 61G15-23.004, F.A.C.

STRUCTURE PLANS

SHEET NO.	SHEET DESCRIPTION
B-1	KEY SHEET
B-2	SIGNATURE SHEET (1 OF 2)
B-4	INDEX OF SHEETS
B-5	GENERAL NOTES (1 OF 3)
B-6	GENERAL NOTES (2 OF 3)
B-7	GENERAL NOTES (3 OF 3)
B-8	PROPOSED FISHING PIER LIGHTING DETAIL
B-9	PROPOSED NAVIGATION CHANNEL PIER LIGHTING DETAIL
BQ-1	SUMMARY OF STRUCTURES QUANTITIES (1 OF 7)
BQ-2	SUMMARY OF STRUCTURES QUANTITIES (2 OF 7)
BQ-3	SUMMARY OF STRUCTURES QUANTITIES (3 OF 7)
BQ-4	SUMMARY OF STRUCTURES QUANTITIES (4 OF 7)
BQ-5	SUMMARY OF STRUCTURES QUANTITIES (5 OF 7)
BQ-6	SUMMARY OF STRUCTURES QUANTITIES (6 OF 7)
BQ-7	SUMMARY OF STRUCTURES QUANTITIES (7 OF 7)
B1-1	PLAN AND ELEVATION (1 OF 6)
B1-2	PLAN AND ELEVATION (2 OF 6)
B1-3	PLAN AND ELEVATION (3 OF 6)
B1-4	PLAN AND ELEVATION (4 OF 6)
B1-5	PLAN AND ELEVATION (5 OF 6)
B1-6	PLAN AND ELEVATION (6 OF 6)
B1-7	TYPICAL SECTION (1 OF 2)
B1-8	TYPICAL SECTION (2 OF 2)
B1-10	CONSTRUCTION SEQUENCE SPAN 1 (1 OF 3)
B1-11	CONSTRUCTION SEQUENCE SPAN 1 (2 OF 3)
B1-12	CONSTRUCTION SEQUENCE SPAN 1 (3 OF 3)
B1-13	CONSTRUCTION SEQUENCE SPAN 2 (1 OF 2)
B1-14	CONSTRUCTION SEQUENCE SPAN 2 (2 OF 2)
B1-15	CONSTRUCTION SEQUENCE SPAN 3 THRU 14
B1-30	FOUNDATION LAYOUT (1 OF 3)
B1-31	FOUNDATION LAYOUT (2 OF 3)
B1-32	FOUNDATION LAYOUT (3 OF 3)
B1-33	PILE DATA TABLE
B1-34	END BENT 1
B1-35	END BENT 15
B1-36	END BENT DETAILS (1 OF 3)
B1-37	END BENT DETAILS (2 OF 3)
B1-38	END BENT DETAILS (3 OF 3)
B1-39	PIER GEOMETRY - PIER 2
B1-40	PIER GEOMETRY - PIER 3
B1-41	PIER GEOMETRY PIERS - 4 THRU 13
B1-42	PIER GEOMETRY PIER - 14
B1-43	PIER CAP PLAN - PIERS 2 & 3
B1-44	PIER CAP PLAN - PIER 4
B1-45	PIER CAP PLAN - PIERS 5 THRU 9
B1-46	PIER CAP PLAN - PIERS 10 & 11
B1-47	PIER CAP PLAN - PIERS 12 & 13
B1-48	PIER CAP PLAN - PIER 14
B1-49	PIER PEDESTAL AND SHEAR BLOCK DETAILS
B1-50	FOOTING CAP REINFORCING - PIER 2
B1-51	FOOTING CAP REINFORCING - PIERS 3, 4, 5 & 12 THRU 14
B1-52	FOOTING CAP REINFORCING - PIERS 6, 7 & 8
B1-53	FOOTING CAP REINFORCING - PIER 9
B1-54	FOOTING CAP REINFORCING - PIERS 10 & 11
B1-55	COLUMN REINFORCING - PIER 2
B1-56	COLUMN REINFORCING - PIERS 4 & 13
B1-57	COLUMN REINFORCING - PIERS 5 THRU 12
B1-58	PIER CAP REINFORCING - PIER 2
B1-59	PIER CAP REINFORCING DETAILS - PIER 2 (1 OF 3)
B1-60	PIER CAP REINFORCING DETAILS - PIER 2 (2 OF 3)
B1-61	PIER CAP REINFORCING DETAILS - PIER 2 (3 OF 3)
B1-62	PIER CAP REINFORCING - PIERS 3 & 14
B1-63	PIER CAP REINFORCING - PIERS 4 THRU 13
B1-64	PIER CAP REINFORCING DETAILS - PIERS 3 THRU 14
B1-65	FINISH GRADE ELEVATIONS (1 OF 17)
B1-66	FINISH GRADE ELEVATIONS (2 OF 17)
B1-67	FINISH GRADE ELEVATIONS (3 OF 17)
B1-68	FINISH GRADE ELEVATIONS (4 OF 17)
B1-69	FINISH GRADE ELEVATIONS (5 OF 17)
B1-70	FINISH GRADE ELEVATIONS (6 OF 17)
B1-71	FINISH GRADE ELEVATIONS (7 OF 17)
B1-72	FINISH GRADE ELEVATIONS (8 OF 17)
B1-73	FINISH GRADE ELEVATIONS (9 OF 17)
B1-74	FINISH GRADE ELEVATIONS (10 OF 17)
B1-75	FINISH GRADE ELEVATIONS (11 OF 17)
B1-76	FINISH GRADE ELEVATIONS (12 OF 17)
B1-77	FINISH GRADE ELEVATIONS (13 OF 17)
B1-78	FINISH GRADE ELEVATIONS (14 OF 17)
B1-79	FINISH GRADE ELEVATIONS (15 OF 17)
B1-80	FINISH GRADE ELEVATIONS (16 OF 17)
B1-81	FINISH GRADE ELEVATIONS (17 OF 17)
B1-82	FRAMING PLAN (1 OF 4)
B1-83	FRAMING PLAN (2 OF 4)
B1-84	FRAMING PLAN (3 OF 4)
B1-85	FRAMING PLAN (4 OF 4)
B1-86	SUPERSTRUCTURE PLAN - SPAN 1
B1-87	SUPERSTRUCTURE PLAN - SPAN 2
B1-88	SUPERSTRUCTURE PLAN - SPAN 3
B1-89	SUPERSTRUCTURE PLAN - SPAN 4
B1-90	SUPERSTRUCTURE PLAN - SPAN 5
B1-91	SUPERSTRUCTURE PLAN - SPAN 6
B1-92	SUPERSTRUCTURE PLAN - SPAN 7
B1-93	SUPERSTRUCTURE PLAN - SPAN 8
B1-94	SUPERSTRUCTURE PLAN - SPAN 9
B1-95	SUPERSTRUCTURE PLAN - SPAN 10
B1-96	SUPERSTRUCTURE PLAN - SPAN 11
B1-97	SUPERSTRUCTURE PLAN - SPAN 12
B1-98	SUPERSTRUCTURE PLAN - SPAN 13
B1-99	SUPERSTRUCTURE PLAN - SPAN 14
B1-100	SUPERSTRUCTURE SECTION (1 OF 3)
B1-101	SUPERSTRUCTURE SECTION (2 OF 3)
B1-102	SUPERSTRUCTURE SECTION (3 OF 3)
B1-103	SUPERSTRUCTURE DETAILS (1 OF 9)
B1-104	SUPERSTRUCTURE DETAILS (2 OF 9)
B1-105	SUPERSTRUCTURE DETAILS (3 OF 9)
B1-106	SUPERSTRUCTURE DETAILS (4 OF 9)
B1-107	SUPERSTRUCTURE DETAILS (5 OF 9)
B1-108	SUPERSTRUCTURE DETAILS (6 OF 9)
B1-109	SUPERSTRUCTURE DETAILS (7 OF 9)
B1-110	SUPERSTRUCTURE DETAILS (8 OF 9)
B1-111	SUPERSTRUCTURE DETAILS (9 OF 9)
B1-112	DIAPHRAGM DETAILS (1 OF 2)
B1-113	DIAPHRAGM DETAILS (2 OF 2)
B1-114	BEAM DATA TABLE (1 OF 4)
B1-115	BEAM DATA TABLE (2 OF 4)
B1-116	BEAM DATA TABLE (3 OF 4)
B1-117	BEAM DATA TABLE (4 OF 4)
B1-118	APPROACH SLABS (1 OF 2)
B1-119	APPROACH SLABS (2 OF 2)
B1-120	LOAD RATING
B1-121	32" CORRAL BARRIER DETAILS (1 OF 6)
B1-122	32" CORRAL BARRIER DETAILS (2 OF 6)
B1-123	32" CORRAL BARRIER DETAILS (3 OF 6)
B1-124	32" CORRAL BARRIER DETAILS (4 OF 6)
B1-125	32" CORRAL BARRIER DETAILS (5 OF 6)
B1-126	32" CORRAL BARRIER DETAILS (6 OF 6)
B1-127	CONSTRUCTION OVER NAVIGATION CHANNEL (1 OF 2)
B1-128	CONSTRUCTION OVER NAVIGATION CHANNEL (2 OF 2)
B1-129	SLOPE PROTECTION DETAILS (1 OF 2)
B1-130	SLOPE PROTECTION DETAILS (1 OF 2)
B1-131	TEMPORARY SIDEWALK (1 OF 3)
B1-132	TEMPORARY SIDEWALK (2 OF 3)
B1-133	TEMPORARY SIDEWALK (3 OF 3)
B1-134	NAVIGATION CHANNEL DETAILS
B1-135	REINFORCING BAR LIST (1 OF 13)
B1-136	REINFORCING BAR LIST (2 OF 13)
B1-137	REINFORCING BAR LIST (3 OF 13)
B1-138	REINFORCING BAR LIST (4 OF 13)
B1-139	REINFORCING BAR LIST (5 OF 13)
B1-140	REINFORCING BAR LIST (6 OF 13)
B1-141	REINFORCING BAR LIST (7 OF 13)
B1-142	REINFORCING BAR LIST (8 OF 13)
B1-143	REINFORCING BAR LIST (9 OF 13)
B1-144	REINFORCING BAR LIST (10 OF 13)
B1-145	REINFORCING BAR LIST (11 OF 13)
B1-146	REINFORCING BAR LIST (12 OF 13)
B1-147	REINFORCING BAR LIST (13 OF 13)
BW-1	PLAN - MSE WALL 1 & 2
BW-2	ELEVATION - MSE WALL 1 (1 OF 2)
BW-3	ELEVATION - MSE WALL 1 (2 OF 2)
BW-4	ELEVATION - MSE WALL 2 (1 OF 2)
BW-5	ELEVATION - MSE WALL 2 (2 OF 2)
BW-6	MSE WALL DETAILS
BW-7	PERMANENT MSE RETAINING WALL DATA TABLES
BW-8	TEMPORARY MSE RETAINING WALL
BW-9	TEMPORARY MSE RETAINING WALL DATA TABLES
BW-10	TEMPORARY CRITICAL SHEET PILE WALL
BW-11	TEMPORARY CRITICAL SHEET PILE WALL DATA TABLES
B2-1	FISHING PIER PLAN AND ELEVATION
B2-2	FISHING PIER FOUNDATION LAYOUT
B2-3	FISHING PIER PILE DATA TABLE
B2-4	FISHING PIER DETAILS
B2-5	FISHING PIER INTEGRAL BENT DETAILS
B2-6	FISHING PIER - PIER 9 FOOTING DETAILS
B2-7	FISHING PIER - PIER 10 AND 11 FOOTING DETAILS
B2-8	FISHING PIER SLAB REINFORCING DETAILS AT PIER FOUNDATIONS
B2-9	FISHING PIER - PIER FOOTING DETAILS (1 OF 2)
B2-10	FISHING PIER - PIER FOOTING DETAILS (2 OF 2)
B2-11	FISHING PIER SUPERSTRUCTURE DETAILS (1 OF 4)
B2-12	FISHING PIER SUPERSTRUCTURE DETAILS (2 OF 4)
B2-13	FISHING PIER SUPERSTRUCTURE DETAILS (3 OF 4)
B2-14	FISHING PIER SUPERSTRUCTURE DETAILS (4 OF 4)
B2-15	FISHING PIER RAILING LAYOUT AND DETAILS
B2-16	MODIFICATIONS TO STANDARD PLANS, INDEX 515-062
B2-17	FISHING PIER POST DETAILS
B2-18	REINFORCING BAR LIST (1 OF 2)
B2-19	REINFORCING BAR LIST (2 OF 2)

REVISIONS

DATE	BY	DESCRIPTION	DATE	BY	DESCRIPTION

Kisinger Campo & Associates Corp.
201 N. Franklin Street
Suite 400
Tampa, FL 33602
Alfredo Jose Layrisse, PE No. 75610

DRAWN BY: ARF 09-21
CHECKED BY: AJL 09-21
DESIGNED BY: DAA 09-21
CHECKED BY: SKB 09-21

LEE COUNTY PUBLIC WORKS
DEPARTMENT OF TRANSPORTATION

ROAD NO.	COUNTY	COUNTY PROJECT No
CR 865	LEE	CN160002

SHEET TITLE: SIGNATURE SHEET (1 OF 2)

REF. DWG. NO.

PROJECT NAME: ESTERO BLVD. (CR 865) OVER BIG CARLOS PASS

SHEET NO. B-2

HUSEYIN DEMIR
LICENSE
No 71494
STATE OF FLORIDA
PROFESSIONAL ENGINEER

THIS ITEM HAS BEEN DIGITALLY SIGNED AND SEALED BY

Huseyin Demir 2022.02.24 16:15:47 -05'00'

ON THE DATE ADJACENT TO THE SEAL.

PRINTED COPIES OF THIS DOCUMENT ARE NOT CONSIDERED SIGNED AND SEALED AND THE SIGNATURE MUST BE VERIFIED ON ANY ELECTRONIC COPIES.

Intera Inc.
2114 NW 40th Terrace, Suite A-1
Gainesville, FL 32605
Huyseyin Demir, PH.D., P.E. NO. 71494

THE ABOVE NAMED PROFESSIONAL ENGINEER SHALL BE RESPONSIBLE FOR THE FOLLOWING SHEETS IN ACCORDANCE WITH RULE 61G15-23.004, F.A.C.

STRUCTURE PLANS

SHEET NO.	SHEET DESCRIPTION
B-3	SIGNATURES SHEET (2 OF 2)
B1-9	BRIDGE HYDRAULIC RECOMMENDATIONS SHEET

ERICK M FREDERICK
LICENSE
No 63920
STATE OF FLORIDA
PROFESSIONAL ENGINEER

THIS ITEM HAS BEEN DIGITALLY SIGNED AND SEALED BY

Erick M Frederick
2022.02.24 16:42:31-05'00'

ON THE DATE ADJACENT TO THE SEAL.

PRINTED COPIES OF THIS DOCUMENT ARE NOT CONSIDERED SIGNED AND SEALED AND THE SIGNATURE MUST BE VERIFIED ON ANY ELECTRONIC COPIES.

Tierra, Inc.
7351 Temple Terrace Hihgway
Tampa, FL 33637
Erick M. Frederick, PE No. 63920

THE ABOVE NAMED PROFESSIONAL ENGINEER SHALL BE RESPONSIBLE FOR THE FOLLOWING SHEETS IN ACCORDANCE WITH RULE 61G15-23.004, F.A.C.

STRUCTURE PLANS

SHEET NO.	SHEET DESCRIPTION
B-3	SIGNATURES SHEET (2 OF 2)
B1-16	REPORT OF SOIL BORINGS (1 OF 14)
B1-17	REPORT OF SOIL BORINGS (2 OF 14)
B1-18	REPORT OF SOIL BORINGS (3 OF 14)
B1-19	REPORT OF SOIL BORINGS (4 OF 14)
B1-20	REPORT OF SOIL BORINGS (5 OF 14)
B1-21	REPORT OF SOIL BORINGS (6 OF 14)
B1-22	REPORT OF SOIL BORINGS (7 OF 14)
B1-23	REPORT OF SOIL BORINGS (8 OF 14)
B1-24	REPORT OF SOIL BORINGS (9 OF 14)
B1-25	REPORT OF SOIL BORINGS (10 OF 14)
B1-26	REPORT OF SOIL BORINGS (11 OF 14)
B1-27	REPORT OF SOIL BORINGS (12 OF 14)
B1-28	REPORT OF SOIL BORINGS (13 OF 14)
B1-29	REPORT OF SOIL BORINGS (14 OF 14)
BW-12	REPORT OF CORE BORINGS (1 OF 7)
BW-13	REPORT OF CORE BORINGS (2 OF 7)
BW-14	REPORT OF CORE BORINGS (3 OF 7)
BW-15	REPORT OF CORE BORINGS (4 OF 7)
BW-16	REPORT OF CORE BORINGS (5 OF 7)
BW-17	REPORT OF CORE BORINGS (6 OF 7)
BW-18	REPORT OF CORE BORINGS (7 OF 7)

REVISIONS

DATE	BY	DESCRIPTION	DATE	BY	DESCRIPTION

Kisinger Campo & Associates Corp.
201 N. Franklin Street
Suite 400
Tampa, FL 33602
Alfredo Jose Layrisse, PE No. 75610

DRAWN BY: ARF 09-21
CHECKED BY: AJL 09-21
DESIGNED BY: DAA 09-21
CHECKED BY: SKB 09-21

LEE COUNTY PUBLIC WORKS
DEPARTMENT OF TRANSPORTATION

ROAD NO.	COUNTY	COUNTY PROJECT No
CR 865	LEE	CN160002

SHEET TITLE: SIGNATURE SHEET (2 OF 2)

REF. DWG. NO.

PROJECT NAME: ESTERO BLVD. (CR 865) OVER BIG CARLOS PASS

SHEET NO. B-3

jhanna 2/24/2022 3:07:43 PM c:\pwworkingdir\kca-pw.bentley.com_kca-pw-01\josh hanna\dms00783\SIGNST02.dgn

INDEX OF STRUCTURE PLANS

SHEET NO.	SHEET DESCRIPTION
B-1	KEY SHEET
B-2	SIGNATURE SHEET (1 OF 2)
B-3	SIGNATURE SHEET (2 OF 2)
B-4	INDEX OF SHEETS
B-5	GENERAL NOTES (1 OF 3)
B-6	GENERAL NOTES (2 OF 3)
B-7	GENERAL NOTES (3 OF 3)
B-8	PROPOSED FISHING PIER LIGHTING DETAIL
B-9	PROPOSED NAVIGATION CHANNEL PIER LIGHTING DETAIL
BQ-1	SUMMARY OF STRUCTURES QUANTITIES (1 OF 7)
BQ-2	SUMMARY OF STRUCTURES QUANTITIES (2 OF 7)
BQ-3	SUMMARY OF STRUCTURES QUANTITIES (3 OF 7)
BQ-4	SUMMARY OF STRUCTURES QUANTITIES (4 OF 7)
BQ-5	SUMMARY OF STRUCTURES QUANTITIES (5 OF 7)
BQ-6	SUMMARY OF STRUCTURES QUANTITIES (6 OF 7)
BQ-7	SUMMARY OF STRUCTURES QUANTITIES (7 OF 7)
B1-1	PLAN AND ELEVATION (1 OF 6)
B1-2	PLAN AND ELEVATION (2 OF 6)
B1-3	PLAN AND ELEVATION (3 OF 6)
B1-4	PLAN AND ELEVATION (4 OF 6)
B1-5	PLAN AND ELEVATION (5 OF 6)
B1-6	PLAN AND ELEVATION (6 OF 6)
B1-7	TYPICAL SECTION (1 OF 2)
B1-8	TYPICAL SECTION (2 OF 2)
B1-9	BRIDGE HYDRAULIC RECOMMENDATIONS SHEET
B1-10	CONSTRUCTION SEQUENCE SPAN 1 (1 OF 3)
B1-11	CONSTRUCTION SEQUENCE SPAN 1 (2 OF 3)
B1-12	CONSTRUCTION SEQUENCE SPAN 1 (3 OF 3)
B1-13	CONSTRUCTION SEQUENCE SPAN 2 (1 OF 2)
B1-14	CONSTRUCTION SEQUENCE SPAN 2 (2 OF 2)
B1-15	CONSTRUCTION SEQUENCE SPAN 3 THRU 14
B1-16	REPORT OF SOIL BORINGS (1 OF 14)
B1-17	REPORT OF SOIL BORINGS (2 OF 14)
B1-18	REPORT OF SOIL BORINGS (3 OF 14)
B1-19	REPORT OF SOIL BORINGS (4 OF 14)
B1-20	REPORT OF SOIL BORINGS (5 OF 14)
B1-21	REPORT OF SOIL BORINGS (6 OF 14)
B1-22	REPORT OF SOIL BORINGS (7 OF 14)
B1-23	REPORT OF SOIL BORINGS (8 OF 14)
B1-24	REPORT OF SOIL BORINGS (9 OF 14)
B1-25	REPORT OF SOIL BORINGS (10 OF 14)
B1-26	REPORT OF SOIL BORINGS (11 OF 14)
B1-27	REPORT OF SOIL BORINGS (12 OF 14)
B1-28	REPORT OF SOIL BORINGS (13 OF 14)
B1-29	REPORT OF SOIL BORINGS (14 OF 14)
B1-30	FOUNDATION LAYOUT (1 OF 3)
B1-31	FOUNDATION LAYOUT (2 OF 3)
B1-32	FOUNDATION LAYOUT (3 OF 3)
B1-33	PILE DATA TABLE
B1-34	END BENT 1
B1-35	END BENT 15
B1-36	END BENT DETAILS (1 OF 3)
B1-37	END BENT DETAILS (2 OF 3)
B1-38	END BENT DETAILS (3 OF 3)
B1-39	PIER GEOMETRY - PIER 2
B1-40	PIER GEOMETRY - PIER 3
B1-41	PIER GEOMETRY PIERS - 4 THRU 13
B1-42	PIER GEOMETRY PIER - 14
B1-43	PIER CAP PLAN - PIERS 2 & 3
B1-44	PIER CAP PLAN - PIER 4
B1-45	PIER CAP PLAN - PIERS 5 THRU 9
B1-46	PIER CAP PLAN - PIERS 10 & 11
B1-47	PIER CAP PLAN - PIERS 12 & 13
B1-48	PIER CAP PLAN - PIER 14
B1-49	PIER PEDESTAL AND SHEAR BLOCK DETAILS
B1-50	FOOTING CAP REINFORCING - PIER 2
B1-51	FOOTING CAP REINFORCING - PIERS 3, 4, 5 & 12 THRU 14
B1-52	FOOTING CAP REINFORCING - PIERS 6, 7 & 8

INDEX OF STRUCTURE PLANS

SHEET NO.	SHEET DESCRIPTION
B1-53	FOOTING CAP REINFORCING - PIER 9
B1-54	FOOTING CAP REINFORCING - PIERS 10 & 11
B1-55	COLUMN REINFORCING - PIER 2
B1-56	COLUMN REINFORCING - PIERS 4 & 13
B1-57	COLUMN REINFORCING - PIERS 5 THRU 12
B1-58	PIER CAP REINFORCING - PIER 2
B1-59	PIER CAP REINFORCING DETAILS - PIER 2 (1 OF 3)
B1-60	PIER CAP REINFORCING DETAILS - PIER 2 (2 OF 3)
B1-61	PIER CAP REINFORCING DETAILS - PIER 2 (3 OF 3)
B1-62	PIER CAP REINFORCING - PIERS 3 & 14
B1-63	PIER CAP REINFORCING - PIERS 4 THRU 13
B1-64	PIER CAP REINFORCING DETAILS - PIERS 3 THRU 14
B1-65	FINISH GRADE ELEVATIONS (1 OF 17)
B1-66	FINISH GRADE ELEVATIONS (2 OF 17)
B1-67	FINISH GRADE ELEVATIONS (3 OF 17)
B1-68	FINISH GRADE ELEVATIONS (4 OF 17)
B1-69	FINISH GRADE ELEVATIONS (5 OF 17)
B1-70	FINISH GRADE ELEVATIONS (6 OF 17)
B1-71	FINISH GRADE ELEVATIONS (7 OF 17)
B1-72	FINISH GRADE ELEVATIONS (8 OF 17)
B1-73	FINISH GRADE ELEVATIONS (9 OF 17)
B1-74	FINISH GRADE ELEVATIONS (10 OF 17)
B1-75	FINISH GRADE ELEVATIONS (11 OF 17)
B1-76	FINISH GRADE ELEVATIONS (12 OF 17)
B1-77	FINISH GRADE ELEVATIONS (13 OF 17)
B1-78	FINISH GRADE ELEVATIONS (14 OF 17)
B1-79	FINISH GRADE ELEVATIONS (15 OF 17)
B1-80	FINISH GRADE ELEVATIONS (16 OF 17)
B1-81	FINISH GRADE ELEVATIONS (17 OF 17)
B1-82	FRAMING PLAN (1 OF 4)
B1-83	FRAMING PLAN (2 OF 4)
B1-84	FRAMING PLAN (3 OF 4)
B1-85	FRAMING PLAN (4 OF 4)
B1-86	SUPERSTRUCTURE PLAN - SPAN 1
B1-87	SUPERSTRUCTURE PLAN - SPAN 2
B1-88	SUPERSTRUCTURE PLAN - SPAN 3
B1-89	SUPERSTRUCTURE PLAN - SPAN 4
B1-90	SUPERSTRUCTURE PLAN - SPAN 5
B1-91	SUPERSTRUCTURE PLAN - SPAN 6
B1-92	SUPERSTRUCTURE PLAN - SPAN 7
B1-93	SUPERSTRUCTURE PLAN - SPAN 8
B1-94	SUPERSTRUCTURE PLAN - SPAN 9
B1-95	SUPERSTRUCTURE PLAN - SPAN 10
B1-96	SUPERSTRUCTURE PLAN - SPAN 11
B1-97	SUPERSTRUCTURE PLAN - SPAN 12
B1-98	SUPERSTRUCTURE PLAN - SPAN 13
B1-99	SUPERSTRUCTURE PLAN - SPAN 14
B1-100	SUPERSTRUCTURE SECTION (1 OF 3)
B1-101	SUPERSTRUCTURE SECTION (2 OF 3)
B1-102	SUPERSTRUCTURE SECTION (3 OF 3)
B1-103	SUPERSTRUCTURE DETAILS (1 OF 9)
B1-104	SUPERSTRUCTURE DETAILS (2 OF 9)
B1-105	SUPERSTRUCTURE DETAILS (3 OF 9)
B1-106	SUPERSTRUCTURE DETAILS (4 OF 9)
B1-107	SUPERSTRUCTURE DETAILS (5 OF 9)
B1-108	SUPERSTRUCTURE DETAILS (6 OF 9)
B1-109	SUPERSTRUCTURE DETAILS (7 OF 9)
B1-110	SUPERSTRUCTURE DETAILS (8 OF 9)
B1-111	SUPERSTRUCTURE DETAILS (9 OF 9)
B1-112	DIAPHRAGM DETAILS (1 OF 2)
B1-113	DIAPHRAGM DETAILS (2 OF 2)
B1-114	BEAM DATA TABLE (1 OF 4)
B1-115	BEAM DATA TABLE (2 OF 4)
B1-116	BEAM DATA TABLE (3 OF 4)
B1-117	BEAM DATA TABLE (4 OF 4)
B1-118	APPROACH SLABS (1 OF 2)
B1-119	APPROACH SLABS (2 OF 2)
B1-120	LOAD RATING

INDEX OF STRUCTURE PLANS

SHEET NO.	SHEET DESCRIPTION
B1-121	32" CORRAL BARRIER DETAILS (1 OF 6)
B1-122	32" CORRAL BARRIER DETAILS (2 OF 6)
B1-123	32" CORRAL BARRIER DETAILS (3 OF 6)
B1-124	32" CORRAL BARRIER DETAILS (4 OF 6)
B1-125	32" CORRAL BARRIER DETAILS (5 OF 6)
B1-126	32" CORRAL BARRIER DETAILS (6 OF 6)
B1-127	CONSTRUCTION OVER NAVIGATION CHANNEL (1 OF 2)
B1-128	CONSTRUCTION OVER NAVIGATION CHANNEL (2 OF 2)
B1-129	SLOPE PROTECTION DETAILS (1 OF 2)
B1-130	SLOPE PROTECTION DETAILS (1 OF 2)
B1-131	TEMPORARY SIDEWALK (1 OF 3)
B1-132	TEMPORARY SIDEWALK (2 OF 3)
B1-133	TEMPORARY SIDEWALK (3 OF 3)
B1-134	NAVIGATION CHANNEL DETAILS
B1-135	REINFORCING BAR LIST (1 OF 13)
B1-136	REINFORCING BAR LIST (2 OF 13)
B1-137	REINFORCING BAR LIST (3 OF 13)
B1-138	REINFORCING BAR LIST (4 OF 13)
B1-139	REINFORCING BAR LIST (5 OF 13)
B1-140	REINFORCING BAR LIST (6 OF 13)
B1-141	REINFORCING BAR LIST (7 OF 13)
B1-142	REINFORCING BAR LIST (8 OF 13)
B1-143	REINFORCING BAR LIST (9 OF 13)
B1-144	REINFORCING BAR LIST (10 OF 13)
B1-145	REINFORCING BAR LIST (11 OF 13)
B1-146	REINFORCING BAR LIST (12 OF 13)
B1-147	REINFORCING BAR LIST (13 OF 13)

INDEX OF WALL PLANS

SHEET NO.	SHEET DESCRIPTION
BW-1	PLAN - MSE WALL 1 & 2
BW-2	ELEVATION - MSE WALL 1 (1 OF 2)
BW-3	ELEVATION - MSE WALL 1 (2 OF 2)
BW-4	ELEVATION - MSE WALL 2 (1 OF 2)
BW-5	ELEVATION - MSE WALL 2 (2 OF 2)
BW-6	MSE WALL DETAILS
BW-7	PERMANENT MSE RETAINING WALL DATA TABLES
BW-8	TEMPORARY MSE RETAINING WALL
BW-9	TEMPORARY MSE RETAINING WALL DATA TABLES
BW-10	TEMPORARY CRITICAL SHEET PILE WALL
BW-11	TEMPORARY CRITICAL SHEET PILE WALL DATA TABLES
BW-12	REPORT OF CORE BORINGS (1 OF 7)
BW-13	REPORT OF CORE BORINGS (2 OF 7)
BW-14	REPORT OF CORE BORINGS (3 OF 7)
BW-15	REPORT OF CORE BORINGS (4 OF 7)
BW-16	REPORT OF CORE BORINGS (5 OF 7)
BW-17	REPORT OF CORE BORINGS (6 OF 7)
BW-18	REPORT OF CORE BORINGS (7 OF 7)

INDEX OF FISHING PIER PLANS

SHEET NO.	SHEET DESCRIPTION
B2-1	FISHING PIER PLAN AND ELEVATION
B2-2	FISHING PIER FOUNDATION LAYOUT
B2-3	FISHING PIER PILE DATA TABLE
B2-4	FISHING PIER DETAILS
B2-5	FISHING PIER INTEGRAL BENT DETAILS
B2-6	FISHING PIER - PIER 9 FOOTING DETAILS
B2-7	FISHING PIER - PIER 10 AND 11 FOOTING DETAILS
B2-8	FISHING PIER SLAB REINFORCING DETAILS AT PIER FOUNDATIONS
B2-9	FISHING PIER - PIER FOOTING DETAILS (1 OF 2)
B2-10	FISHING PIER - PIER FOOTING DETAILS (2 OF 2)
B2-11	FISHING PIER SUPERSTRUCTURE DETAILS (1 OF 4)
B2-12	FISHING PIER SUPERSTRUCTURE DETAILS (2 OF 4)
B2-13	FISHING PIER SUPERSTRUCTURE DETAILS (3 OF 4)
B2-14	FISHING PIER SUPERSTRUCTURE DETAILS (4 OF 4)
B2-15	FISHING PIER RAILING LAYOUT AND DETAILS
B2-16	MODIFICATIONS TO STANDARD PLANS, INDEX 515-062

INDEX OF FISHING PIER PLANS

SHEET NO.	SHEET DESCRIPTION
B2-17	FISHING PIER POST DETAILS
B2-18	REINFORCING BAR LIST (1 OF 2)
B2-19	REINFORCING BAR LIST (2 OF 2)

STANDARD PLANS

STANDARD PLAN INDEX	INDEX TITLE
400-091	APPROACH SLABS (30 FT.) (RIGID PAVEMENT APPROACHES)
400-510	COMPOSITE ELASTOMERIC BEARING PADS - PRESTRESSED FLORIDA-I AND AASHTO TYPE II BEAMS
415-001	BAR BENDING DETAILS (STEEL)
450-010	FLORIDA-I BEAM - TYPICAL DETAILS AND NOTES
450-078	FLORIDA-I 78 BEAM - STANDARD DETAILS
450-199	PRESTRESSED I-BEAMS BUILD-UP AND DEFLECTION DATA
450-512	BEARING PLATES (TYPE 2) - PRESTRESSED FLORIDA-I AND AASHTO TYPE II BEAMS
455-001	SQUARE PRESTRESSED CONCRETE PILES - TYPICAL DETAILS AND NOTES
455-002	SQUARE PRESTRESSED CONCRETE PILE SPLICES
455-003	SQUARE PRESTRESSED CONCRETE PILES - EDC INSTRIMENTATION
455-024	24" SQUARE PRESTRESSED CONCRETE PILE
458-110	EXPANSION JOINT SYSTEM - POURED JOINT WITH BACKER ROD
462-001	POST-TENSIONING VERTICAL PROFILES
462-002	POST-TENSIONING ANCHORAGE PROTECTION
462-003	POST-TENSIONING ANCHORAGE AND TENDON FILLING DETAILS
471-030	FENDER SYSTEM - PRESTRESSED CONCRETE PILES AND FRP WALES
510-001	NAVIGATION LIGHT SYSTEM DETAILS (FIXED BRIDGES)
515-061	BRIDGE PEDESTRIAN/BICYCLE RAILING (ALUMINUM)
521-600	MSE WALL COPING (PRECAST OR C-I-P)
548-020	MSE RETAINING WALL SYSTEMS - PERMANENT
548-030	MSE RETAINING WALL SYSTEMS - TEMPORARY
630-010	CONDUIT DETAILS - EMBEDDED

EXISTING BRIDGE PLANS

BX1-1 TO BX1-154	EXISTING BRIDGE PLANS

BRIDGE NO. 124143

NOTICE: THE OFFICIAL RECORD OF THIS SHEET IS THE ELECTRONIC FILE DIGITALLY SIGNED AND SEALED UNDER RULE 61G15-23.004, F.A.C.

REVISIONS

DATE	BY	DESCRIPTION	DATE	BY	DESCRIPTION

Kisinger Campo & Associates Corp.
201 N. Franklin Street
Suite 400
Tampa, FL 33602
Alfredo Jose Layrisse, PE No. 75610

DRAWN BY:	SKB 10-20
CHECKED BY:	JHJ 04-21
DESIGNED BY:	SKB 10-20
CHECKED BY:	AJL 09-21

LEE COUNTY PUBLIC WORKS
DEPARTMENT OF TRANSPORTATION

ROAD NO.	COUNTY	COUNTY PROJECT No
CR 865	LEE	CN160002

SHEET TITLE: INDEX OF SHEETS

REF. DWG. NO.:

PROJECT NAME: ESTERO BLVD. (CR 865) OVER BIG CARLOS PASS

SHEET NO.: B-4

jhanna 2/24/2022 3:07:58 PM c:\pwworkingdir\kca-pw.bentley.com_kca-pw-01\josh hanna\dms00783\B1Index01.dgn

A. DESIGN SPECIFICATIONS:

1. FDOT STRUCTURES MANUAL DATED JANUARY 2021.
2. AMERICAN ASSOCIATION OF STATE HIGHWAY AND TRANSPORTATION OFFICIALS (AASHTO) LOAD AND RESISTANCE FACTOR (LRFD) BRIDGE DESIGN SPECIFICATIONS, (9TH EDITION).
3. FDOT DESIGN MANUAL DATED JANUARY 2021 AND SUBSEQUENT ROADWAY DESIGN BULLETINS.

B. GOVERNING STANDARDS AND CONSTRUCTION SPECIFICATIONS:

FLORIDA DEPARTMENT OF TRANSPORTATION, FY 2022-2023 STANDARD PLANS AND REVISED INDEX DRAWINGS AS APPENDED HEREIN, AND JANUARY 2022 STANDARD SPECIFICATIONS FOR ROAD AND BRIDGE CONSTRUCTION AS AMENDED BY THE CONTRACT DOCUMENTS.

C. DESIGN METHODOLOGY:

LOAD AND RESISTANCE FACTOR DESIGN (LRFD) METHOD USING STRENGTH, EXTREME EVENT, SERVICE AND FATIGUE LIMIT STATES.

D. DESIGN LOADINGS:

1. DEAD LOADS:
   - A) UNIT WEIGHT OF REINFORCED CONCRETE: 150 PCF
   - B) PRESTRESSED BEAM FIB 78: 1,146 PLF
   - C) TRAFFIC RAILING - CORRAL SHAPE TRAFFIC RAILING: 460 PLF
   - D) 42" BRIDGE PEDESTRIAN/BICYCLE RAILING (ALUMINUM, SCHEME 2, INDEX 515-061 (TYP.): 65 PLF
   - E) STAY-IN-PLACE FORMS: 20 PSF
   - F) SACRIFICIAL DECK THICKNESS FOR LONG BRIDGES: THE DECK SLABS INCLUDE ½ INCH SACRIFICIAL THICKNESS FOR DEAD LOAD BUT OMITTED FROM THE SECTION PROPERTIES USED FOR DESIGN.
   - G) DESIGN DOES NOT INCLUDE AN ALLOWANCE OF 15 PSF FOR FUTURE WEARING SURFACE.
2. LIVE LOADS:
   - A) HL-93 WITH DYNAMIC LOAD ALLOWANCE (BIG CARLOS PASS BRIDGE)
   - B) H-10 LOADING OR 90 PSF (FISHING PIER)
   - C) PEDESTRIAN LIVE LOAD: 75 PSF (BIG CARLOS PASS BRIDGE)
3. WIND LOADS:
   - A) BASIC WIND AND WIND DURING CONSTRUCTION: IN ACCORDANCE WITH THE FDOT STRUCTURES MANUAL
4. THERMAL FORCES:
   - A) SEASONAL VARIATION FOR DESIGN (SDG TABLE 2.7.1-1):
     CONCRETE: TEMP. RISE: +35°F; TEMP. FALL: -35°F; MEAN TEMPERATURE: 70°F
   - B) THERMAL COEFFICIENTS:
     CONCRETE = 0.000006 PER °F
   - C) THERMAL GRADIENT IN ACCORDANCE WITH SDG SECTION 2.7.2 AND AASHTO LRFD FIGURE 3.12.3-2.
5. SEISMIC:
   - A) IN ACCORDANCE WITH SDG SECTION 2.3 AND AASHTO LRFD SECTION 4.7.4.
6. CREEP AND SHRINKAGE:
   - A) IN ACCORDANCE WITH AASHTO LRFD SECTION 5.4.2.3.
7. VESSEL COLLISION LOADS:
   - A) WATER PIERS FOR THE BIG CARLOS PASS BRIDGE HAVE BEEN DESIGNED TO RESISTANCE VESSEL IMPACT LOADS 82 KIPS FOR PIERS 3 THRU 11.
8. UTILITIES:
   - A) WATER MAIN ALLOWANCE: 150PLF
   - B) UTILITY TRAY ALLOWANCE: 50PLF
9. CONSTRUCTION LOADS:
   - A) SEE BRIDGE PLANS "BEAM BRACING DATA" AND "ERECTION SEQUENCE" SHEETS FOR CONSTRUCTION LOADS ASSOCIATED WITH BEAM STABILITY OR GIRDER ERECTION PRIOR TO PLACEMENT OF THE DECK SLAB
   - B) FINISHING MACHINE LOAD: 13.0 KIPS.
   - C) FINISHING MACHINE WHEEL LOCATION BEYOND THE EDGE OF DECK OVERHANG: 6 INCHES.
   - D) CONSTRUCTION LIVE LOAD: 20 PSF EXTENDED OVER THE ENTIRE BRIDGE WIDTH AND 50-FEET IN LONGITUDINAL LENGTH CENTERED ON THE FINISHING MACHINE.
   - E) REMOVABLE DECK CANTILEVER TIMBER FORMS WITH OVERHANG BRACKETS: 15 PSF.
   - F) LIVE LOAD AT OR NEAR THE OUTSIDE EDGE OF DECK DURING DECK CASTING: 75 PLF APPLIED AS A MOVING LOAD OVER A LENGTH OF 20 FEET.
   - G) CONSTRUCTION INACTIVE DESIGN WIND SPEED: 90 MPH
   - H) VELOCITY PRESSURE EXPOSURE COEFFICIENT (KZ): 1.34
   - I) CONSTRUCTION ACTIVE DESIGN WIND SPEED: 30 MPH
10. WAVE FORCE: BIG CARLOS PASS BRIDGE (SUPERSTRUCTURE)

SPAN	1	14
VERTICAL (KIP)	1029	340
HORIZONTAL (KIP)	341	63
MOMENT (KIP-FT)	45,214	17,539

WAVE FORCE: BIG CARLOS PASS BRIDGE (SUBSTRUCTURE)

PIERS	2, 10-14	3-9
HORIZONTAL (KIP)	58	180

WAVE FORCE: (FISHING PIER)

SPAN	9-11	11-12
VERTICAL (KIP)	113	111
HORIZONTAL (KIP)	27	1
MOMENT (KIP-FT)	1,229	1,201

WAVE FORCES ARE CONCURRENT AND AT SERVICE LEVEL.

E. BRIDGE NAMES:

1. INSTALL THE FOLLOWING BRIDGE NAME AND NUMBER ON THE TRAFFIC RAILINGS IN ACCORDANCE WITH THE TRAFFIC RAILING STANDARD PLANS:

BRIDGE NO:	BRIDGE NAME:
124143	ESTERO BLVD. (CR 865) OVER BIG CARLOS PASS

F. ENVIRONMENTAL CLASSIFICATION:

SUPERSTRUCTURE - EXTREMELY AGGRESSIVE (CHLORIDES > 18000 PPM)
SUBSTRUCTURE - EXTREMELY AGGRESSIVE (CHLORIDES > 18000 PPM)
(SULFATES > 2,800 PPM)

G. MATERIALS:

1. CONCRETE:
   - A) CONCRETE SHALL BE IN ACCORDANCE WITH SPECIFICATIONS SECTION 346.

CONCRETE CLASS	MINIMUM 28-DAY COMPRESSIVE STRENGTH (PSI)	LOCATION OF CONCRETE IN STRUCTURE
V (SPECIAL) WITH HRP	f'c = 6,000	PRESTRESSED CONCRETE PILES (MAIN BRIDGE)
V (SPECIAL) WITH HRP	f'c = 6,000	PRESTRESSED CONCRETE PILES (FISHING PIER)
IV (MASS)	f'c = 5,500	C.I.P. SUBSTRUCTURE (PIER FOOTINGS, COLUMNS AND CAPS)
IV (MASS) WITH HRP	f'c = 5,500	C.I.P. SUBSTRUCTURE (PIER COLUMNS AND CAPS BELOW EL. 12.46)
IV WITH HRP	f'c = 5,500	C.I.P. SUBSTRUCTURE (END BENTS AND PEDESTALS)
IV WITH HRP	f'c = 5,500	C.I.P. SUBSTRUCTURE (FISHING PIER CAPS AND SLAB)
II (BRIDGE DECK)	f'c = 4,500	APPROACH SLABS
IV	f'c = 5,500	C.I.P. BRIDGE DECK, TRAFFIC RAILINGS, AND DIAPHRAGMS
VI HRP	f'c = 8,500	PRESTRESSED FLORIDA-I BEAMS
III (SEAL)	f'c = 3,000	WATER FOOTING SEAL SLAB

2. SPLASH ZONE CONCRETE:
   POUR CLASS IV (MASS) CONCRETE WITH HIGHLY REACTIVE POZZOLANS CONTINUOUSLY TO EL. 14 SWITCH CONCRETE MIX OR PROVIDE A CONSTRUCTION JOINT IN THE PIERS AT THE SPLASH ZONE EL 12.46.
3. REINFORCING STEEL:
   - A) ALL REINFORCING STEEL SHALL BE GRADE 60 CARBON STEEL PER SPECIFICATIONS SECTION 931.
   - B) REINFORCEMENT DETAIL DIMENSIONS ARE OUT-TO-OUT OF BARS. SEE STANDARD PLANS INDEX 415-001 FOR ADDITIONAL DETAILS.
4. BRIDGE MOUNTED CONDUITS, HANGERS AND FASTENERS SHALL BE STAINLESS STEEL GRADE A316, AND SHALL BE ELECTRICALLY INSULATED FROM CONTACT WITH CARBON STEEL; INCLUDING PIPING, REINFORCING STEEL AND STEEL FORMS.

H. CONCRETE COVER:

1. CONCRETE COVERS SHALL BE:
   - A) SUPERSTRUCTURE (C.I.P.) 2" (EXCEPT RIDING SURFACES)
   - B) SUPERSTRUCTURE (RIDING SURFACES) 2½". COVER DIMENSION INCLUDES A 0.5 INCH ALLOWANCE FOR PLANING
   - C) FRONT AND BACK SURFACES OF CORRAL TRAFFIC RAILINGS 2½"
   - D) FRONT AND BACK SURFACES OF WALL COPINGS AND PEDESTRIAN RAILINGS WHICH MAY BE CONSTRUCTED USING THE SLIP FORMING METHOD 3"
   - E) SUPERSTRUCTURE (PRECAST BEAMS) 2" (TOP OF TOP FLANGE = ¾")
   - F) SUBSTRUCTURE (C.I.P.) NOT IN CONTACT WITH WATER 4"
   - G) SUBSTRUCTURE CAST AGAINST EARTH OR IN CONTACT WITH WATER 4½"
   - H) TOP OF BEAM SEATS AND PEDESTALS 2"
   - I) PRESTRESSED PILING 3"
   - J) RETAINING WALL (EXCLUDES MSE) 3"
   - K) FISHING PIER SUPERSTRUCTURE 3"
2. CONCRETE COVER DIMENSIONS SHOWN IN THE PLANS DO NOT INCLUDE REINFORCEMENT PLACEMENT AND FABRICATION TOLERANCES UNLESS SHOWN AS "MINIMUM COVER". SEE SPECIFICATIONS SECTION 415 FOR ALLOWABLE TOLERANCES. ALL DIMENSIONS PERTAINING TO THE LOCATION OR REINFORCING STEEL ARE TO THE ℄ OF BAR OR BAR BUNDLE EXCEPT WHERE THE CLEAR DIMENSION IS NOTED TO THE FACE OF THE CONCRETE.

I. VERTICAL DATUM:

1. ALL ELEVATIONS ARE IN FEET AND ARE REFERENCED TO THE NAVD 1988 DATUM.

J. PLAN DIMENSIONS:

1. ALL DIMENSIONS IN THESE PLANS ARE MEASURED IN FEET AND INCHES EITHER HORIZONTALLY OR VERTICALLY UNLESS OTHERWISE NOTED.
2. ALL DIMENSIONS AND JOINT OPENINGS IN THE STRUCTURE ARE MEASURED AT A MEAN TEMPERATURE OF 70° F.

K. UTILITIES:

1. SEE THE PLAN AND ELEVATION SHEETS FOR THE PLAN LOCATION OF EXISTING UTILITIES. THE LOCATIONS OF UTILITIES SHOWN ARE APPROXIMATE.
2. SEE THE UTILITY ADJUSTMENT SHEETS IN THE ROADWAY PLANS FOR THE DISPOSITION OF UTILITIES AFFECTED BY CONSTRUCTION.
3. NOTIFY ALL UTILITY COMPANIES WITHIN THE RIGHT-OF-WAY TO VERIFY UTILITY LOCATIONS AND ENSURE ALL UTILITIES HAVE BEEN IDENTIFIED PRIOR TO THE START OF CONSTRUCTION.
4. ENSURE THAT EXISTING UTILITIES ARE NOT DAMAGED OR DISTURBED IN ACCORDANCE WITH THE SPECIFICATIONS.

BRIDGE NO. 124143

NOTICE: THE OFFICIAL RECORD OF THIS SHEET IS THE ELECTRONIC FILE DIGITALLY SIGNED AND SEALED UNDER RULE 61G15-23.004, F.A.C.

REVISIONS

DATE	BY	DESCRIPTION	DATE	BY	DESCRIPTION

Kisinger Campo & Associates Corp.
201 N. Franklin Street
Suite 400
Tampa, FL 33602
Alfredo Jose Layrisse, PE No. 75610

DRAWN BY:	CHECKED BY:	DESIGNED BY:	CHECKED BY:
ARF 06-19	AJL 06-19	CEL 06-19	AJL 06-19

LEE COUNTY PUBLIC WORKS DEPARTMENT OF TRANSPORTATION

ROAD NO.	COUNTY	COUNTY PROJECT No
CR 865	LEE	CN160002

SHEET TITLE: GENERAL NOTES (1 OF 3)

REF. DWG. NO.:

PROJECT NAME: ESTERO BLVD. (CR 865) OVER BIG CARLOS PASS

SHEET NO.: B-5

L. CONSTRUCTION JOINTS:

CONSTRUCTION JOINTS WILL BE PERMITTED ONLY AT LOCATIONS SHOWN ON THE PLANS. ADDITIONAL CONSTRUCTION JOINTS, OR ALTERNATE LOCATIONS TO THOSE SHOWN, SHALL REQUIRE WRITTEN APPROVAL BY THE ENGINEER OF RECORD.

M. BRIDGE DECK SCREEDING, FINISHING AND GROOVING:

SCREED THE RIDING SURFACE OF THE BRIDGE DECK AND APPROACH SLABS TO ACHIEVE THE FINISH GRADE ELEVATIONS SHOWN IN THE PLANS. ACCOUNT FOR THEORETICAL DEFLECTIONS DUE TO DECK WEIGHT, DECK CASTING SEQUENCE, DECK FORMING SYSTEMS, CONSTRUCTION LOADS, OVERLAYS AND TEMPORARY SHORING, ETC. AS REQUIRED.

N. STAY-IN-PLACE DECK FORMS:

DESIGN INCLUDES ALLOWANCE FOR 20 PSF OVER THE PROJECTED PLAN AREA OF THE METAL FORMS FOR THE UNIT WEIGHT OF THE METAL FORMS AND THE CONCRETE REQUIRED TO FILL THE FORM FLUTES. STAY-IN-PLACE FORMS ARE NOT ALLOWED AT DECK CANTILEVERS.

O. EXISTING BRIDGE CONSTRUCTION CONSIDERATIONS:

1. DIMENSION VERIFICATION: UNLESS OTHERWISE NOTED, THE DIMENSIONS, ELEVATIONS AND INTERSECTING ANGLES SHOWN ARE BASED ON THE INFORMATION PROVIDED IN THE ORIGINAL CONSTRUCTION PLANS AND MAY NOT REPRESENT AS-BUILT CONDITIONS. IT IS THE CONTRACTOR'S RESPONSIBILITY TO VERIFY THIS DATA BEFORE BEGINNING CONSTRUCTION AND NOTIFY THE ENGINEER OF ANY DISCREPANCIES.
2. EXISTING BRIDGE SHALL BE OPERATED AND MAINTAINED BY CONTRACTOR DURING THE PROJECT CONSTRUCTION. DEMOLITION OF THE EXISTING BRIDGE, OTHER THAN THE ELEMENTS SPECIFIED IN THE CONSTRUCTION SEQUENCE, CANNOT COMMENCE UNTIL VEHICULAR TRAFFIC IS ON THE NEW BRIDGE.
3. REFER TO THE CONTRACT DOCUMENTS FOR EXISTING BRIDGE ITEMS TO BE SALVAGED AND PLACE OF DELIVERY. COORDINATE WITH THE COUNTY FOR DELIVERY OPERATION.

P. TRAFFIC CONTROL PLANS:

SEE THE ROADWAY PLANS FOR THE TRAFFIC CONTROL PLANS.

Q. PHASING OF WORK:

1. THE PHASING AND PROGRESSION OF WORK SHALL CONFORM WITH THE STAGED CONSTRUCTION SEQUENCE DRAWINGS AND NOTES AS WELL AS THE TRAFFIC CONTROL PLANS.
2. EXISTING BRIDGE MAINTENANCE AND OPERATION SHALL CONTINUE AS NECESSARY FOR MAINTENANCE OF MARINE TRAFFIC PER CONSTRUCTION SEQUENCING AND IN COMPLIANCE WITH THE PROVISIONS OF THE COAST GUARD PERMIT.
3. COVER ALL TEMPORARILY EXPOSED REINFORCEMENT DUE TO PHASE CONSTRUCTION (END BENT 1, APPROACH SLAB 1, SPAN 1 AND 2 DECK AND DIAPHRAGMS, PIER 2 CAP, AND EXPOSED FOOTING DOWEL REINFORCEMENT FOR FISHING PIER CONSTRUCTION) WITH COLD GALVANIZING COMPOUND. BEFORE FINALIZING CONSTRUCTION, PRESSURE-WASH REINFORCEMENT TO REMOVE COMPOUND AND THE SURFACE SALT. EXPOSED REINFORCEMENT CANNOT BE UNPROTECTED FROM THE ELEMENTS MORE THAN 7 DAYS. THE COST OF THIS OPERATION IS INCIDENTAL TO THE COST OF REINFORCEMENT.
4. EXPECT TO INSTALL FISHING PIER PILES AFTER MAIN BRIDGE PILE INSTALLATION DUE TO PERMITTING

R. ABBREVIATIONS:

CLR. – "CLEAR"
CJ – "CONSTRUCTION JOINT"
E – "EXPANSION BEARING"
EB – "END BENT"
EF – "EACH FACE"
EJ – "EXPANSION JOINT"
EJB – "EMBEDDED JUNCTION BOX"
FFBW – "FRONT FACE OF BACKWALL"
FFRW – "FRONT FACE OF RETAINING WALL"
I – "INTEGRAL"
MHC – "MINIMUM HORIZONTAL CLEARANCE"
MVC – "MINIMUM VERTICAL CLEARANCE"
PBR – "PEDESTRIAN / BICYCLE RAILING"
PGL – "PROFILE GRADE LINE"
TYP. – "TYPICAL"
UNO – "UNLESS NOTED OTHERWISE"
WP – "WORK POINT"

S. PAY ITEM NOTES:

1. THE EXISTING BRIDGE IS TO BE REMOVED FOR THIS PROJECT UNDER PAY ITEM NUMBER 110-3. THE STRUCTURE SHALL BE REMOVED IN ACCORDANCE WITH THE SPECIFICATIONS AND THE TRAFFIC CONTROL PLANS PHASING SEQUENCE. SEE SHEETS B1-10 THROUGH B1-15, TEMPORARY TRAFFIC CONTROL PLANS, AND THE EXISTING BRIDGE PLANS FOR ADDITIONAL INFORMATION.
2. PAY ITEM 103-1-A INCLUDES COMPLETE INSTALLATION AND COMPLETE REMOVAL OF THE TEMPORARY TRESLES.
3. PILE PREFORMING IS INCIDENTAL TO THE COST OF PRESTRESSED CONCRETE PILING, INCLUDING TEST PILING.
4. THE COST OF REMOVING THE TEMPORARY SIDEWALK AND RESTORING THE AREA ARE CONSIDERED INCIDENTAL TO THE COST OF PAY ITEM NUMBER 110-3.
5. PAY ITEM 515-2-311 REQUIRES SUBMITTAL OF SHOP DRAWINGS FOR APPROVAL OF RAILING LAYOUT.

T. CONCRETE SURFACE FINISH:

T. CONCRETE SURFACE FINISH:
1. ALL EXPOSED CONCRETE SURFACE OF THE END BENTS (EXCEPT TOP OF CAP), TRAFFIC RAILINGS, CURBS FOR PEDESTRIAN RAILING, EXTERIOR FACE OF EXTERIOR GIRDERS, PIER COLUMNS AND CAPS (EXCEPT TOP OF CAP) SHALL RECEIVE A WATER-BASED HIGH-BUILD EPOXY-ACRYLIC RESIN, SEE DETAILS.
2. PROVIDE THE INDICATED WATER-BASED HIGH-BUILD EPOXY-ACRYLIC RESIN COATING FOR THE FULL LENGTH OF THE BARRIERS AND PEDESTRIAN RAILING CURB ALONG APPROACH ROADWAY.
3. COATING SHALL BE OF SMOOTH TEXTURE AND APPLIED WITH SPRAY AND FINISHED WITH ROLLER.
4. COATING SHALL MEET FEDERAL SPECIFICATION TTC-555B AND HAVE A COVERAGE OF 50 SQUARE FEET PER GALLON.

U. POST-TENSIONING

1. PRESTRESSED PARAMETERS:
   MAXIMUM JACKING STRESS ..... 0.90 FPY
   MAXIMUM BAR STRESS AT ANCHORAGE IMMEDIATELY AFTER ANCHORING ..... 0.70 FPU
   ANCHOR SET ..... 1/16"
2. FRICTION COEFFICIENT (U):
   CORRUGATED POLYETHYLENE DUCTS 0.30
3. WOBBLE COEFFICIENT (K):
   CORRUGATED POLYETHYLENE DUCTS 0.0003/FT
4. LOCAL ZONE ANCHORAGE REINFORCEMENT SHALL BE DESIGNED BY THE SPECIALTY ENGINEER. PROVIDE SIGNED AND SEALED DRAWINGS AND CALCULATIONS WITH SHOP DRAWINGS. THE CONTRACTOR SHALL ADJUST REINFORCING AS NECESSARY TO CLEAR THE LOCAL ZONE REINFORCEMENT.
5. POST-TENSIONING BARS:
   POST-TENSION BARS SHALL COMPLY WITH SECTION 960 OF THE FDOT STANDARD ROAD AND BRIDGE SPECIFICATIONS.
6. POST-TENSIONING DUCTS:
   CORRUGATED POLYETHYLENE DUCT SHALL COMPLY WITH SECTION 960 OF THE FDOT STANDARD ROAD AND BRIDGE SPECIFICATIONS.
7. GROUT:
   DUCTS SHALL BE INJECTED WITH GROUT. GROUT SHALL BE IN ACCORDANCE WITH STANDARD SPECIFICATIONS 462, 938 AND 960.
8. POST-TENSIONING ANCHORAGE DETAILS, PROTECTION AND GROUT REQUIREMENTS SHALL BE IN ACCORDANCE WITH STANDARD PLANS 462-001, 462-002, AND 462-003.

V. CHAMFER

ALL EXPOSED EDGES AND CORNERS OF CONCRETE SHALL BE CHAMFERED 3/4" UNLESS OTHERWISE NOTED.

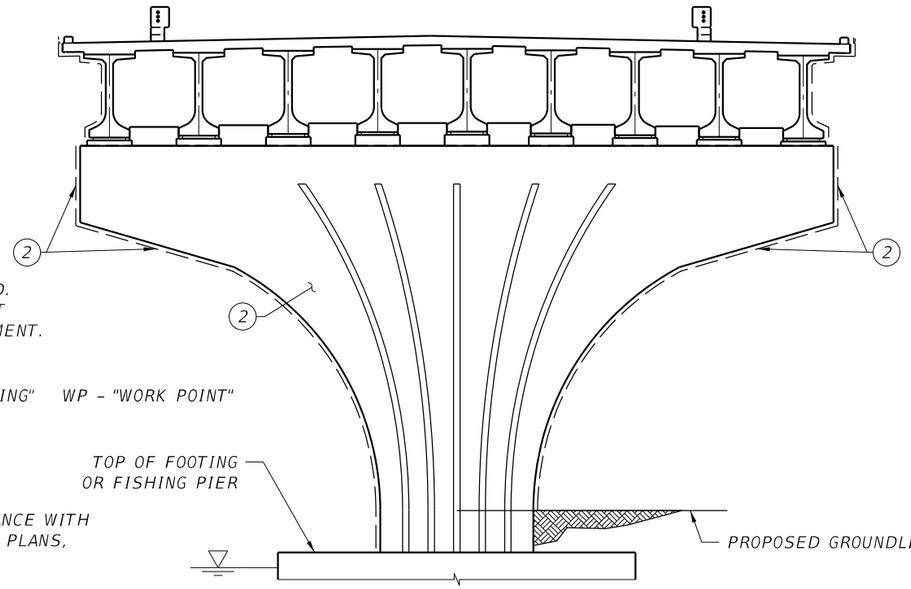

SURFACE FINISH DETAILS

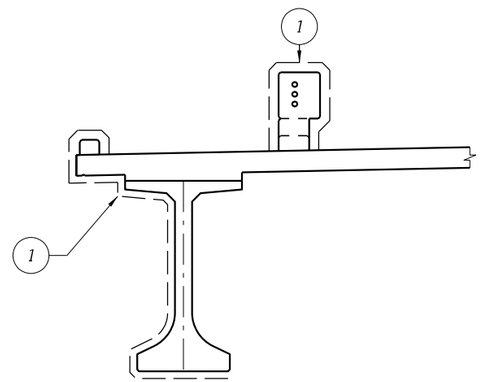

SUPERSTRUCTURE

PALOMINO BEIGE T-103	1
SANDALWOOD T-114	2

BRIDGE NO. 124143

NOTICE: THE OFFICIAL RECORD OF THIS SHEET IS THE ELECTRONIC FILE DIGITALLY SIGNED AND SEALED UNDER RULE 61G15-23.004, F.A.C.

REVISIONS					
DATE	BY	DESCRIPTION	DATE	BY	DESCRIPTION

Kisinger Campo & Associates Corp.
201 N. Franklin Street
Suite 400
Tampa, FL 33602
Alfredo Jose Layrisse, PE No. 75610

DRAWN BY: ARF 06-19
CHECKED BY: AJL 06-19
DESIGNED BY: CEL 06-19
CHECKED BY: AJL 06-19

LEE COUNTY PUBLIC WORKS
DEPARTMENT OF TRANSPORTATION

ROAD NO.	COUNTY	COUNTY PROJECT No
CR 865	LEE	CN160002

SHEET TITLE: GENERAL NOTES (2 OF 3)
REF. DWG. NO.:
PROJECT NAME: ESTERO BLVD. (CR 865) OVER BIG CARLOS PASS
SHEET NO.: B-6

W. HAZARDOUS MATERIALS

1. SURVEYS OF THE EXISTING BRIDGE INDICATED THE PRESENCE OF VERIFIED AND ASSUMED OF THE FOLLOWING HAZARDOUS MATERIALS:
   A. ASBESTOS CONTAINING MATERIALS (ACM) WERE ASSUMED TO BE PRESENT IN THE BRAKE PADS LOCATED IN THE GEAR ASSEMBLY PIT AND ELECTRICAL COMPONENTS OBSERVED AT THE TENDER HOUSE ELECTRICAL ROOM BOTTOM FLOOR.
   B. LABORATORY ANALYTICAL RESULTS INDICATED THE PRESENCE OF METALS-BASED COATINGS IN A TOTAL OF THREE (3) PAINT CHIP SAMPLES ALL LOCATED IN THE AREA OF THE BASCULE SPAN AND THE TRUNNION PIER.
2. THE CONTRACTOR SHALL REVIEW TIERRA'S NESHAP ASBESTOS SURVEY AND SCREENING FOR METALS-BASED COATINGS REPORT AND THE LEVEL I CONTAMINATION SCREENING EVALUATION REPORT FOR ADDITIONAL DETAILS AND COMPLY WITH THE ASBESTOS ABATEMENT PLAN IN APPENDIX G OF THE SURVEY REPORT.
3. THE CONTRACTOR SHALL COORDINATE WITH THE PROJECT ENGINEER AND THE COUNTY WHEN WORKING IN THESE AREAS PREVIOUSLY IDENTIFIED AS HAVING THE PRESENCE OF VERIFIED OR "ASSUMED" HAZARDOUS MATERIALS. ALL ABATEMENT AND DISPOSAL SHALL BE PERFORMED IN ACCORDANCE WITH FEDERAL, STATE, AND LOCAL RULES. SHOULD ANY REGULATED MATERIALS REQUIRE ABATEMENT OR DISPOSAL, DOCUMENTATION AND MANIFESTS SHALL BE PROVIDED TO THE COUNTY FOR THE PROJECT RECORD. AREAS OF UNKNOWN CONTAMINATION SHALL BE HANDLED IN ACCORDANCE WITH THE SPECIFICATION SECTION 110 AND PERMIT REQUIREMENTS.

X. MANATEE CONDITIONS FOR IN-WATER WORK

1. INSTRUCT ALL PERSONNEL ASSOCIATED WITH THE PROJECT ABOUT THE PRESENCE OF MANATEES AND MANATEE SPEED ZONES, AND THE NEED TO AVOID COLLISIONS WITH AND INJURY TO MANATEES. THE PERMITTEE SHALL ADVISE ALL CONSTRUCTION PERSONNEL THAT THERE ARE CIVIL AND CRIMINAL PENALTIES FOR HARMING, HARASSING, OR KILLING MANATEES WHICH ARE PROTECTED UNDER THE MARINE MAMMAL PROTECTION ACT, THE ENDANGERED SPECIES ACT, AND THE FLORIDA MANATEE SANCTUARY ACT.

2. SILTATION OR TURBIDITY BARRIERS SHALL BE MADE OF MATERIAL IN WHICH MANATEES CANNOT BECOME ENTANGLED, SHALL BE PROPERLY SECURED, AND SHALL BE REGULARLY MONITORED TO AVOID MANATEE ENTANGLEMENT OR ENTRAPMENT. BARRIERS MUST NOT IMPEDE MANATEE MOVEMENT.

3. ALL ON-SITE PROJECT PERSONNEL AREA RESPONSIBLE FOR OBSERVING WATER-RELATED ACTIVITIES FOR THE PRESENCE OF MANATEE(S). ALL IN-WATER OPERATIONS, INCLUDING VESSELS, MUST BE SHUTDOWN IF A MANATEE(S) COMES WITHIN 50 FEET OF THE OPERATION. ACTIVITIES WILL NOT RESUME UNTIL THE MANATEE(S) HAS MOVED BEYOND THE 50-FOOT RADIUS OF THE PROJECT OPERATION, OR UNTIL 30 MINUTES ELAPSES IF THE MANATEE HAS NOT REAPPEARED WITHIN 50 FEET OF THE OPERATION. ANIMALS MUST NOT BE HERDED AWAY OR HARASSED INTO LEAVING.

4. ANY COLLISION WITH OR INJURY TO A MANATEE SHALL BE REPORTED IMMEDIATELY TO THE FWC HOTLINE AT 1-888-404-3922. COLLISION AND/OR INJURY SHOULD ALSO BE REPORTED TO THE U.S. FISH AND WILDLIFE SERVICE IN JACKSONVILLE (1-904-731-3336) FOR NORTH FLORIDA OR VERO BEACH (1-772-562-3909) FOR SOUTH FLORIDA, AND TO FWC AT ImperiledSpecies@myFWC.com

5. TEMPORARY SIGNS CONCERNING MANATEES SHALL BE POSTED PRIOR TO AND DURING ALL IN-WATER PROJECT ACTIVITIES. ALL SIGNS ARE TO BE REMOVED BY THE PERMITTEE UPON COMPLETION OF THE PROJECT. TEMPORARY SIGNS THAT HAVE ALREADY BEEN APPROVED FOR THIS USE BY THE FLORIDA FISH AND WILDLIFE CONSERVATION COMMISSION (FWC) MUST BE USED (SEE MyFWC.com/manatee). ONE SIGN WHICH READS "CAUTION: BOATERS" MUST BE POSTED. A SECOND SIGN MEASURING AT LEAST 8½" BY 11" EXPLAINING THE REQUIREMENTS FOR "IDLE SPEED/NO WAKE" AND THE SHUT DOWN OF IN-WATER OPERATIONS MUST BE POSTED IN A LOCATION PROMINENTLY VISIBLE TO ALL PERSONNEL ENGAGED IN WATER-RELATED ACTIVITIES. QUESTIONS CONCERNING THESE SIGNS CAN BE SENT TO THE EMAIL ADDRESS LISTED ABOVE.

X. MANATEE CONDITIONS FOR IN-WATER WORK CONT.

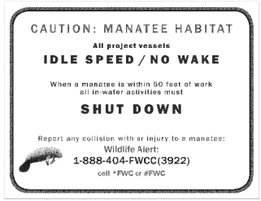

6. ALL MANATEE SIGNS ARE TO BE REMOVED UPON COMPLETION OF THE PROJECT.

Y. GULF STURGEON PROTECTION CONSTRUCTION CONDITIONS

1. LEE COUNTY SHALL ADVISE ALL COUNTY PROJECT PERSONNEL AND CONTRACTOR PERSONNEL ON THE PROJECT THAT THERE ARE CIVIL AND CRIMINAL PENALTIES FOR HARMING, HARASSING OR KILLING STURGEON. THE COUNTY AND THE CONTRACTOR WILL BE HELD RESPONSIBLE FOR ANY STURGEON HARMED, HARASSED, OR KILLED AS A RESULT OF THE PROJECT ACTIVITY.

2. THE COUNTY SHALL PROVIDE INFORMATION TO ALL COUNTY AND CONTRACT PERSONNEL FOR IDENTIFICATION OF STURGEON.

3. APPROPRIATE WORK SHIFT PERSONNEL WILL BE INSTRUCTED IN THE APPEARANCE, HABITS, BIOLOGY, MIGRATORY PATTERNS, AND PRESERVATION OF STURGEON. AT LEAST ONE OF THESE TRAINED PERSONNEL WILL BE ON SITE DURING CONSTRUCTION ACTIVITIES TO MAINTAIN A CONSTANT SURVEILLANCE FOR THESE SPECIES, ASSURE THE CESSATION OF ACTIVITIES (SUCH AS DREDGING, EXCESS TURBIDITY, AND CONSTRUCTION BARGE ACTIVITY), WHICH MAY ENDANGER THESE SPECIES, AND ASSURE THAT UNINHIBITED PASSAGE FOR THE ANIMALS IS PROVIDED.

4. POST SIGNS ON SITE WARNING OF THE PRESENCE OF STURGEON, OF THEIR ENDANGERED STATUS AND FEDERAL PROTECTION, AND PRECAUTIONS NEEDED.

5. TURBIDITY FROM CONSTRUCTION ACTIVITY WILL BE ADEQUATELY CONTROLLED TO PREVENT DEGRADATION OF THE QUALITY AND TRANSPARENCY OF THE WATER. WHEN STURGEON ARE PRESENT, TURBIDITY CURTAINS OF APPROPRIATE DIMENSION WILL BE USED TO RESTRICT THE ANIMALS' ACCESS TO THE WORK AREA. POLLUTION BOOMS OR TURBIDITY CURTAINS SHOULD USE TANGLE RESISTANT OR HEMP ROPE WHEN ANCHORING, OR EMPLOY SURFACE ANCHORS' TO PREVENT ENTANGLING STURGEON. CONTINUOUS SURVEILLANCE WILL BE MAINTAINED IN ORDER TO FREE ANIMALS WHICH MAY BECOME TRAPPED IN SILT OR TURBIDITY BARRIERS.

6. NO DREDGING OF THE RIVER BOTTOM WILL BE CONDUCTED FOR BARGE ACCESS.

Z. BATS

1. THE COUNTY HAS DETERMINED THAT BATS OCCUPY BRIDGE NO. 120028.

2. INSTALL BAT EXCLUSION DEVICES ON THE STRUCTURE PRIOR TO COMMENCING WORK ON THE STRUCTURE. AT THE PRE-CONSTRUCTION CONFERENCE, SUBMIT A BAT EXCLUSION PLAN OUTLINING ENTRY AND EXIT POINT IDENTIFICATION, INSTALLATION OF EXCLUSION DEVICES, METHODOLOGY FOR SECURING ALL OPENINGS HALF AN INCH OR GREATER IN SIZE, AND MONITORING METHODOLOGY. PROVIDE A SPECIALTY CONTRACTOR OR BIOLOGIST EXPERIENCED IN PERFORMING BAT EXCLUSIONS TO IMPLEMENT THE BAT EXCLUSION PLAN. INITIAL INSTALLATION OF BAT EXCLUSION DEVICES CAN ONLY OCCUR FROM AUGUST 15TH THROUGH APRIL 15TH.

Z. BATS CONT.

3. MAINTAIN ALL EXCLUSION DEVICES THROUGHOUT WORK ON THE STRUCTURE. IMMEDIATELY REPAIR DAMAGED OR ALTERED EXCLUSION DEVICES THAT COULD ALLOW REENTRY OF BATS. REPAIRS MUST BE CONDUCTED BY A QUALIFIED SPECIALTY CONTRACTOR OR EXPERIENCED BIOLOGIST. REMOVE THE EXCLUSION DEVICES UPON COMPLETION OF CONSTRUCTION. NOTIFY THE ENGINEER IF BATS, BAT REMAINS, OR NEW EVIDENCE OF ROOSTING IS FOUND.

AA. SEA TURTLE AND SMALLTOOTH SAWFISH CONSTRUCTION CONDITIONS

1. THE PERMITTEE SHALL INSTRUCT ALL PERSONNEL ASSOCIATED WITH THE PROJECT OF THE POTENTIAL PRESENCE OF THESE SPECIES AND THE NEED TO AVOID COLLISIONS WITH SEA TURTLES AND SMALLTOOTH SAWFISH. ALL CONSTRUCTION PERSONNEL ARE RESPONSIBLE FOR OBSERVING WATER-RELATED ACTIVITIES FOR THE PRESENCE OF THESE SPECIES.

2. THE PERMITTEE SHALL ADVISE ALL CONSTRUCTION PERSONNEL THAT THERE ARE CIVIL AND CRIMINAL PENALTIES FOR HARMING, HARASSING, OR KILLING SEA TURTLES OR SMALLTOOTH SAWFISH, WHICH ARE PROTECTED UNDER THE ENDANGERED SPECIES ACT OF 1973.

3. SILTATION BARRIERS SHALL BE MADE OF MATERIAL IN WHICH A SEA TURTLE OR SMALLTOOTH SAWFISH CANNOT BECOME ENTANGLED, BE PROPERLY SECURED, AND BE REGULARLY MONITORED TO AVOID PROTECTED SPECIES ENTRAPMENT. BARRIERS MAY NOT BLOCK SEA TURTLE OR SMALLTOOTH SAWFISH ENTRY TO OR EXIT FROM DESIGNATED CRITICAL HABITAT WITHOUT PRIOR AGREEMENT FROM THE NATIONAL MARINE FISHERIES SERVICE'S PROTECTED RESOURCES DIVISION, ST. PETERSBURG, FLORIDA.

4. ALL VESSELS ASSOCIATED WITH THE CONSTRUCTION PROJECT SHALL OPERATE AT "NO WAKE/IDLE" SPEEDS AT ALL TIMES WHILE IN THE CONSTRUCTION AREA AND WHILE IN WATER DEPTHS WHERE THE DRAFT OF THE VESSEL PROVIDES LESS THAN A FOUR-FOOT CLEARANCE FROM THE BOTTOM. ALL VESSELS WILL PREFERENTIALLY FOLLOW DEEP-WATER ROUTES (E.G., MARKED CHANNELS) WHENEVER POSSIBLE.

5. IF A SEA TURTLE OR SMALLTOOTH SAWFISH IS SEEN WITHIN 100 YARDS OF THE ACTIVE DAILY CONSTRUCTION/DREDGING OPERATION OR VESSEL MOVEMENT, ALL APPROPRIATE PRECAUTIONS SHALL BE IMPLEMENTED TO ENSURE ITS PROTECTION. THESE PRECAUTIONS SHALL INCLUDE CESSATION OF OPERATION OF ANY MOVING EQUIPMENT CLOSER THAN 50 FEET OF A SEA TURTLE OR SMALLTOOTH SAWFISH. OPERATION OF ANY MECHANICAL CONSTRUCTION EQUIPMENT SHALL CEASE IMMEDIATELY IF A SEA TURTLE OR SMALLTOOTH SAWFISH IS SEEN WITHIN A 50-FT RADIUS OF THE EQUIPMENT. ACTIVITIES MAY NOT RESUME UNTIL THE PROTECTED SPECIES HAS DEPARTED THE PROJECT AREA OF ITS OWN VOLITION.

6. ANY COLLISION WITH AND/OR INJURY TO A SEA TURTLE OR SMALLTOOTH SAWFISH SHALL BE REPORTED IMMEDIATELY TO THE NATIONAL MARINE FISHERIES SERVICE'S PROTECTED RESOURCES DIVISION (727-824-5312) AND THE LOCAL AUTHORIZED SEA TURTLE STRANDING/RESCUE ORGANIZATION.

7. ANY SPECIAL CONSTRUCTION CONDITIONS, REQUIRED OF YOUR SPECIFIC PROJECT, OUTSIDE THESE GENERAL CONDITIONS, IF APPLICABLE, WILL BE ADDRESSED IN THE PRIMARY CONSULTATION.

8. NO NIGHT TIME CONSTRUCTION WILL BE ALLOWED DURING SEA TURTLE NESTING SEASON FROM 4/1 TO 9/30. MINIMIZATION OF CONSTRUCTION LIGHTING, TO THE EXTENT PRACTICABLE, WILL BE CONSIDERED DURING NON-NESTING SEASON AND BALANCED WITH WORKERS' SAFETY NEEDS.

9. EXPLOSIVE DEMOLITION IS PROHIBITED IN THE PROJECT

BRIDGE NO. 124143

NOTICE: THE OFFICIAL RECORD OF THIS SHEET IS THE ELECTRONIC FILE DIGITALLY SIGNED AND SEALED UNDER RULE 61G15-23.004, F.A.C.

REVISIONS					
DATE	BY	DESCRIPTION	DATE	BY	DESCRIPTION

Kisinger Campo & Associates Corp.
201 N. Franklin Street
Suite 400
Tampa, FL 33602
Alfredo Jose Layrisse, PE No. 75610

DRAWN BY: ARF 06-19
CHECKED BY: AJL 06-19
DESIGNED BY: CEL 06-19
CHECKED BY: AJL 06-19

LEE COUNTY PUBLIC WORKS
DEPARTMENT OF TRANSPORTATION

ROAD NO.	COUNTY	COUNTY PROJECT No
CR 865	LEE	CN160002

SHEET TITLE: GENERAL NOTES (3 OF 3)

REF. DWG. NO.:

PROJECT NAME: ESTERO BLVD. (CR 865) OVER BIG CARLOS PASS

SHEET NO.: B-7

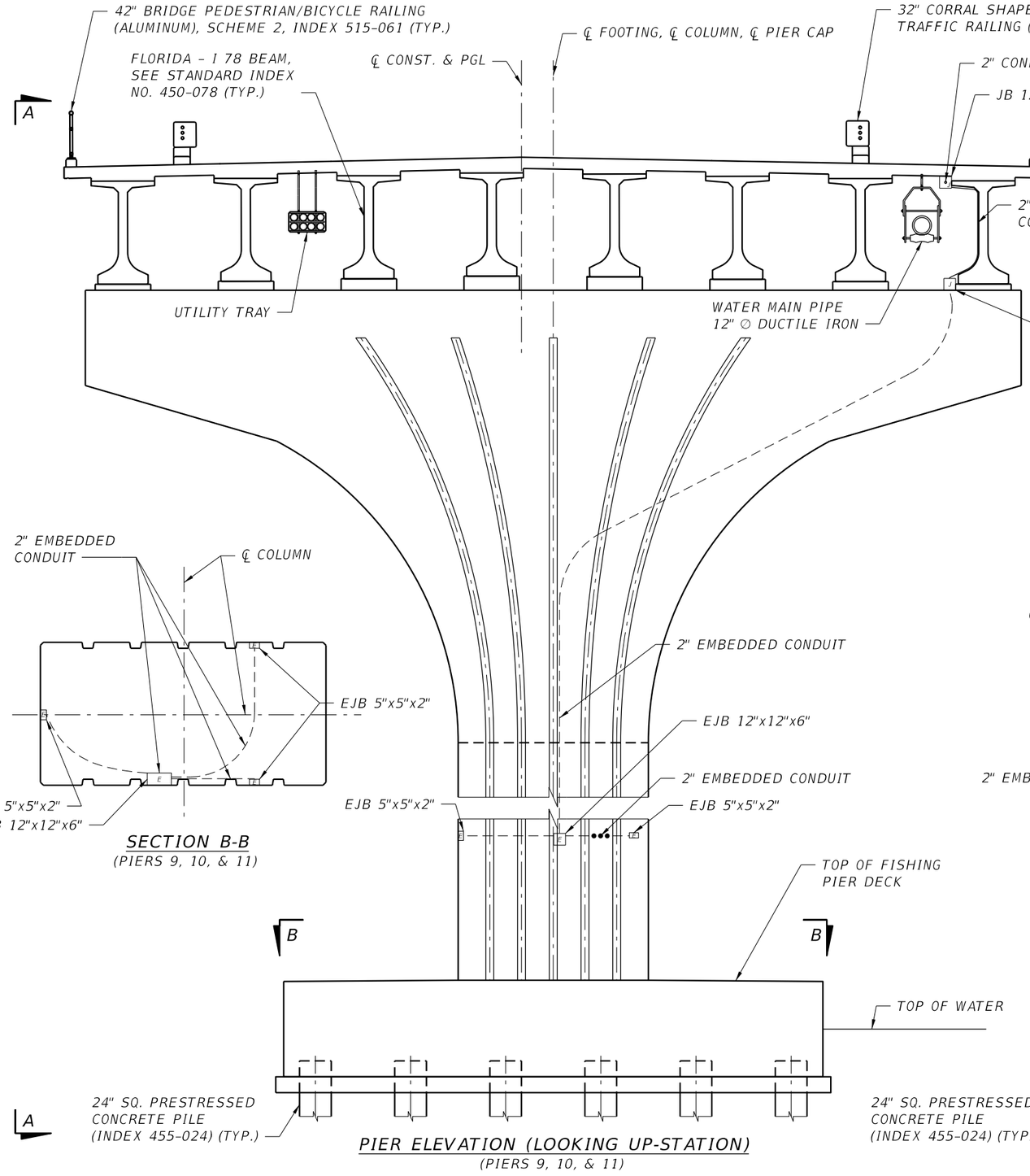

SECTION B-B
(PIERS 9, 10, & 11)

PIER ELEVATION (LOOKING UP-STATION)
(PIERS 9, 10, & 11)

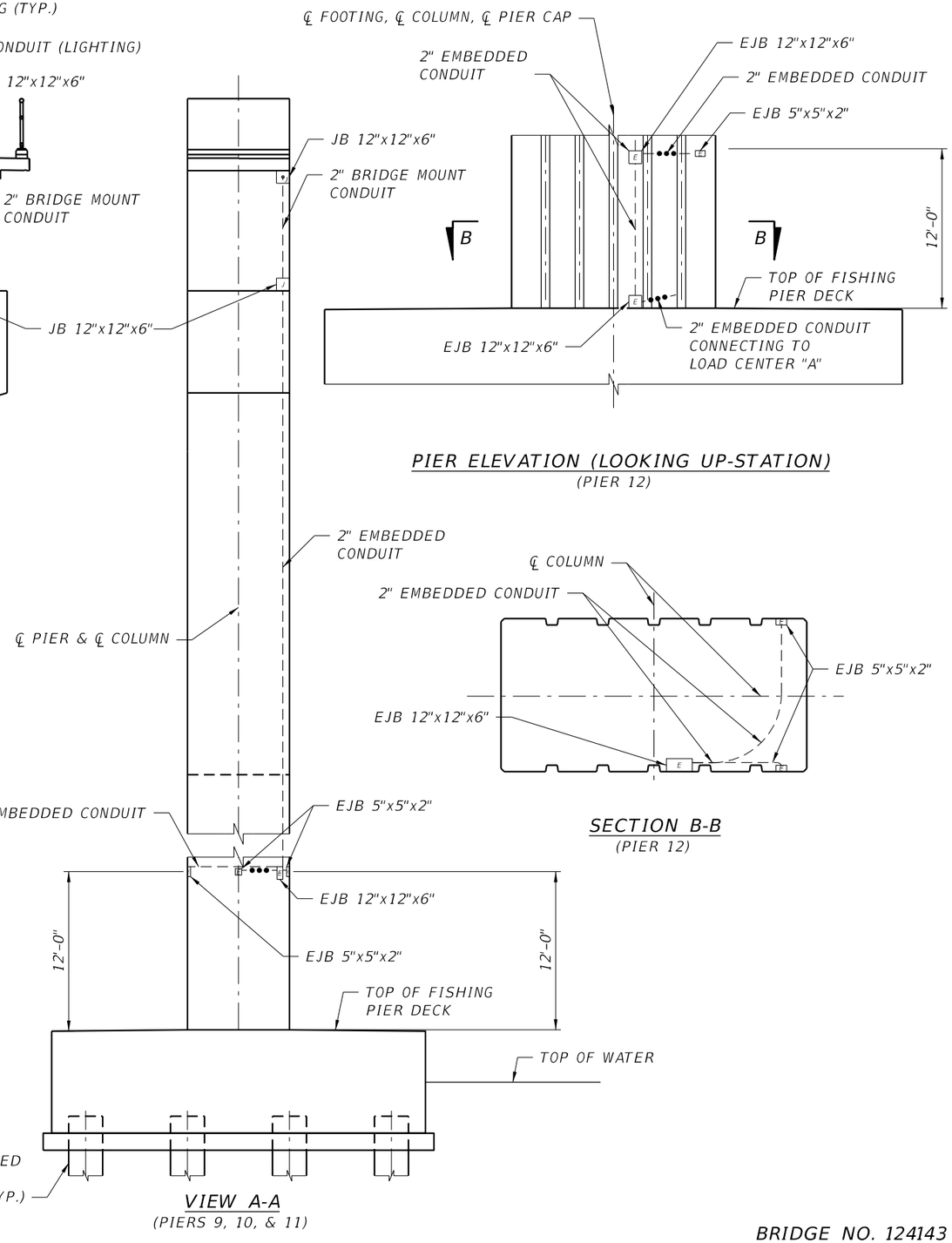

PIER ELEVATION (LOOKING UP-STATION)
(PIER 12)

SECTION B-B
(PIER 12)

VIEW A-A
(PIERS 9, 10, & 11)

BRIDGE NO. 124143

NOTICE: THE OFFICIAL RECORD OF THIS SHEET IS THE ELECTRONIC FILE DIGITALLY SIGNED AND SEALED UNDER RULE 61G15-23.004, F.A.C.

REVISIONS					
DATE	BY	DESCRIPTION	DATE	BY	DESCRIPTION

Kisinger Campo & Associates Corp.
201 N. Franklin Street
Suite 400
Tampa, FL 33602
Alfredo Jose Layrisse, PE No. 75610

DRAWN BY:	CHECKED BY:	DESIGNED BY:	CHECKED BY:
JBH 10-21	AJL 10-21	AJL 10-21	LM 10-21

LEE COUNTY PUBLIC WORKS
DEPARTMENT OF TRANSPORTATION

ROAD NO.	COUNTY	COUNTY PROJECT No
CR 865	LEE	CN160002

SHEET TITLE: PROPOSED FISHING PIER LIGHTING DETAIL

REF. DWG. NO.

PROJECT NAME: ESTERO BLVD. (CR 865) OVER BIG CARLOS PASS

SHEET NO. B-8

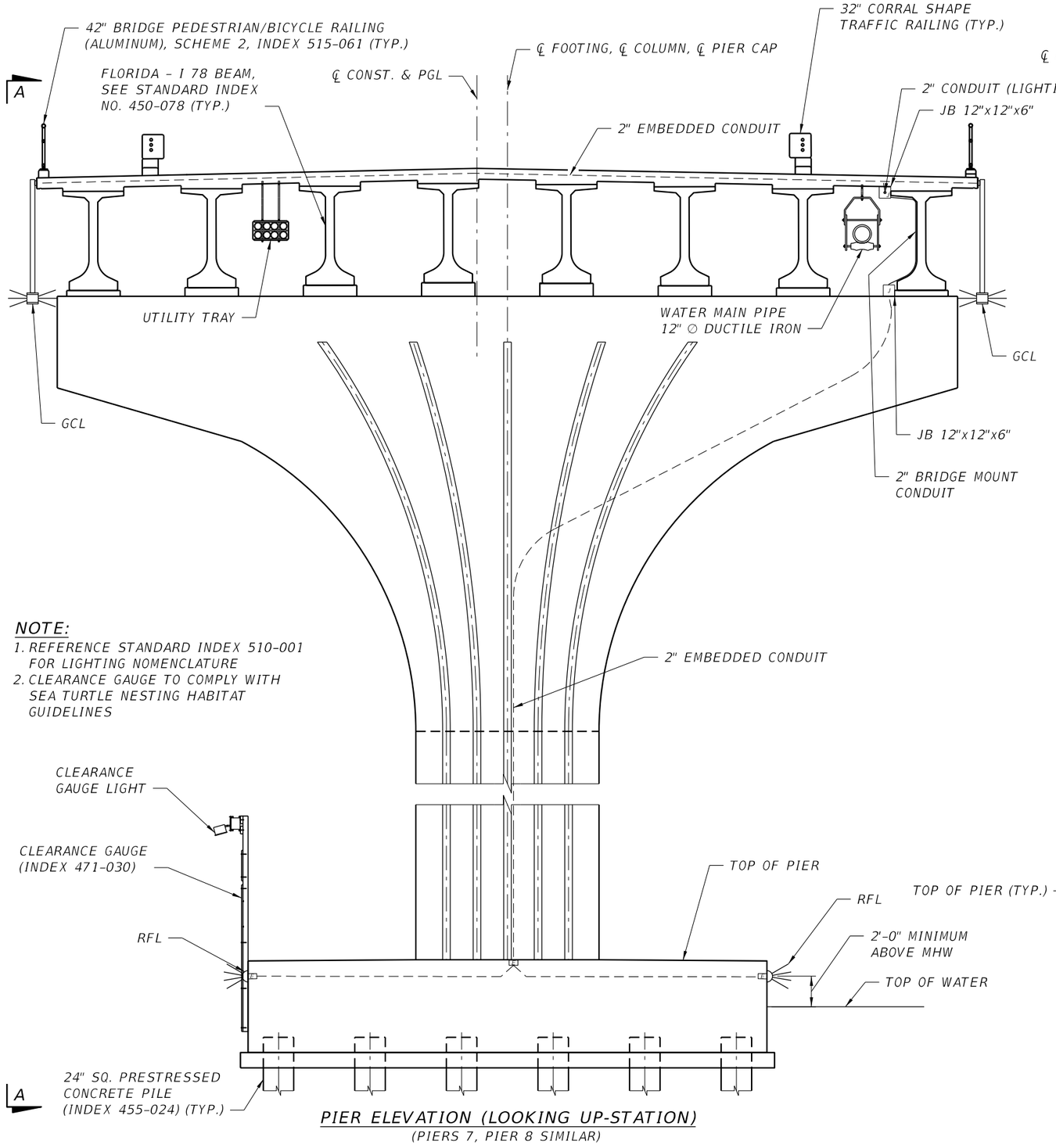

PIER ELEVATION (LOOKING UP-STATION)
(PIERS 7, PIER 8 SIMILAR)

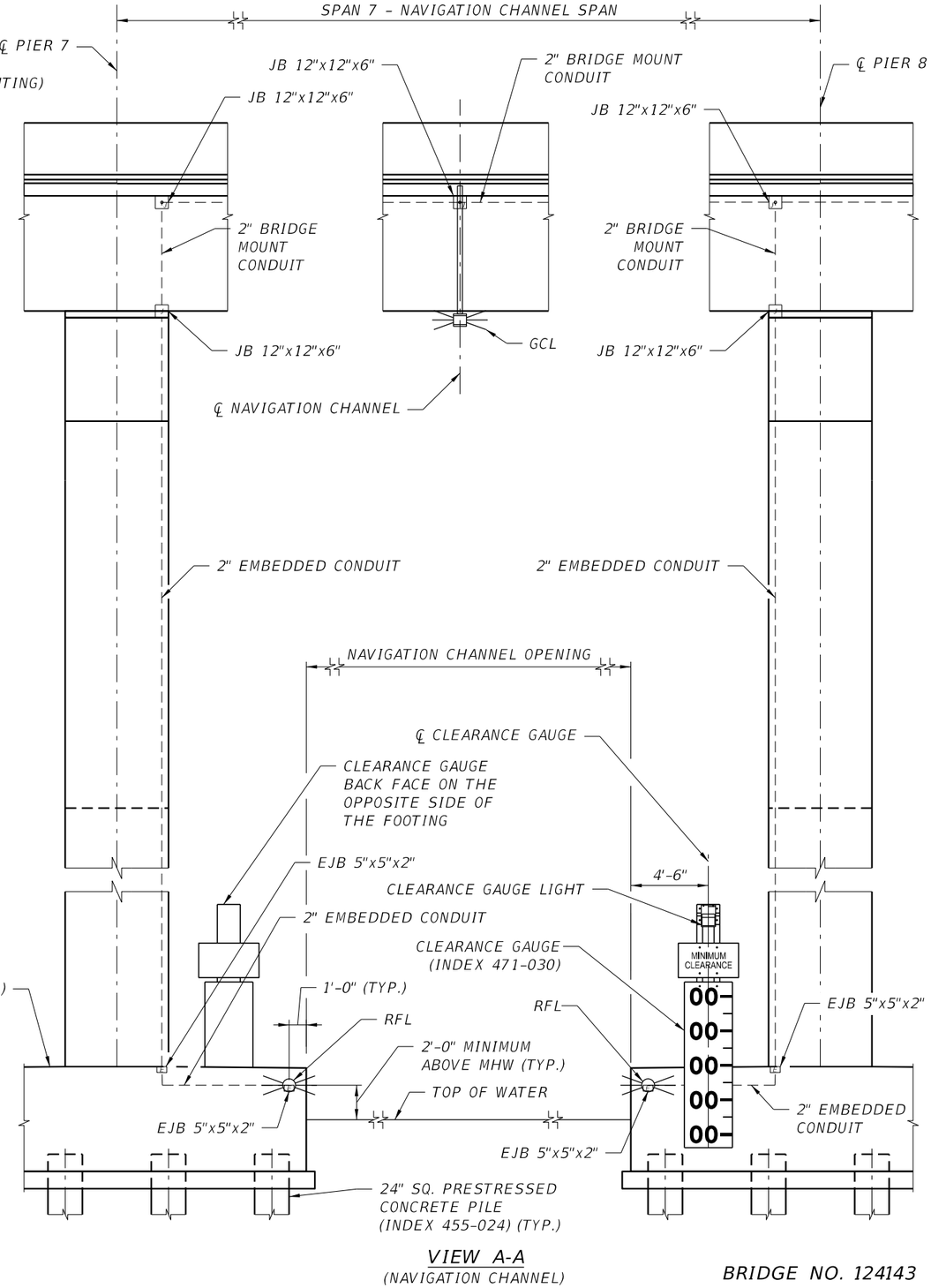

VIEW A-A
(NAVIGATION CHANNEL)

BRIDGE NO. 124143

NOTICE: THE OFFICIAL RECORD OF THIS SHEET IS THE ELECTRONIC FILE DIGITALLY SIGNED AND SEALED UNDER RULE 61G15-23.004, F.A.C.

REVISIONS					
DATE	BY	DESCRIPTION	DATE	BY	DESCRIPTION

Kisinger Campo & Associates Corp.
201 N. Franklin Street
Suite 400
Tampa, FL 33602
Alfredo Jose Layrisse, PE No. 75610

DRAWN BY:	CHECKED BY:	DESIGNED BY:	CHECKED BY:
JBH 10-21	AJL 10-21	AJL 10-21	LM 10-21

LEE COUNTY PUBLIC WORKS
DEPARTMENT OF TRANSPORTATION

ROAD NO.	COUNTY	COUNTY PROJECT No
CR 865	LEE	CN160002

SHEET TITLE: PROPOSED NAVIGATION CHANNEL PIER LIGHTING DETAIL

REF. DWG. NO.

PROJECT NAME: ESTERO BLVD. (CR 865) OVER BIG CARLOS PASS

SHEET NO. B-9

SUMMARY OF STRUCTURE QUANTITIES - BRIDGE NO. 124143

SECTION	PAY ITEM NO.	PAY ITEM DESCRIPTION	LOCATION	UNIT	QUANTITY		TOTAL		DESIGN NOTES	CONSTRUCTION REMARKS
					P	F	P	F		
LUMP SUM ITEMS	103-1-A	TEMPORARY WORK STRUCTURES- PROJECT NUMBER 445323-1-52-01	BRIDGE	LS	1.0		1			
	110-84	TRANSPORT EXISTING MATERIAL FOR REEF ESTABLISHMENT	BRIDGE	LS	1.0		1			26°22.784'N -81°57.683W
	510-1	NAVIGATION LIGHTS- FIXED BRIDGE, SYSTEM	BRIDGE	LS	1.0		1			
REMOVAL	110-3	REMOVAL OF EXISTING STRUCTURES/BRIDGES	BRIDGE	SF	100.0		71074		PHASE I	
			APPROACH SLAB 1		755.0				PHASE III	
			BRIDGE		63615.0				PHASE III	
			FENDER SYSTEM		5849.0				PHASE III	
			APPROACH SLAB 2		755.0				PHASE III	
	110-4-10	REMOVAL OF EXISTING CONCRETE	SLOPE PROTECTION	SY	433.0		433		PHASE III	
	120-5	CHANNEL EXCAVATION	NAV. CHANNEL	CY	2163.0		2163.0		PHASE III	PROPOSED NAVIGATION CHANNEL
FOUNDATION	455-34-5	PRESTRESSED CONCRETE PILING, 24" SQ	END BENT 1	LF	640		50062		PHASE II	
			PIER 2		3127				PHASE II	
			PIER 3		3467				PHASE II	
			PIER 4		3536				PHASE II	
			PIER 5		3536				PHASE II	
			PIER 6		2494				PHASE II	
			PIER 7		4368				PHASE II	
			PIER 8		3793				PHASE II	
			PIER 9		3989				PHASE II	
			PIER 10		4076				PHASE II	
			PIER 11		3179				PHASE II	
			PIER 12		4105				PHASE II	
			PIER 13		3800				PHASE II	
			PIER 14		3950				PHASE II	
			END BENT 15		1362				PHASE II	
			END BENT 1		640				PHASE III	
	455-143-5	TEST PILES - PRESTRESSED CONCRETE, 24" SQ	END BENT 1	LF	175		2642		PHASE II	
			PIER 2		146				PHASE II	
			PIER 3		166				PHASE II	
			PIER 4		169				PHASE II	
			PIER 5		169				PHASE II	
			PIER 6		124				PHASE II	
			PIER 7		205				PHASE II	
			PIER 8		180				PHASE II	
			PIER 9		189				PHASE II	
			PIER 10		193				PHASE II	
			PIER 11		154				PHASE II	
			PIER 12		194				PHASE II	
			PIER 13		181				PHASE II	
			PIER 14		187				PHASE II	
			END BENT 15		210				PHASE II	
	459-71	PILES, POLYETHLENE SHEETING	END BENT 1	SY	31		129		PHASE II	
			END BENT 15		73				PHASE II	
			END BENT 1		25				PHASE III	
SUBSTRUCTURE	400-3-20	CONCRETE CLASS III, SEAL	PIER 2	CY	33.8		391.7		PHASE II	
			PIER 3		29.8				PHASE II	
			PIER 4		29.8				PHASE II	
			PIER 5		29.8				PHASE II	
			PIER 6		29.8				PHASE II	
			PIER 7		29.8				PHASE II	
			PIER 8		29.8				PHASE II	
			PIER 9		29.8				PHASE II	
			PIER 10		29.8				PHASE II	
			PIER 11		29.8				PHASE II	
			PIER 12		29.8				PHASE II	
			PIER 13		29.8				PHASE II	
			PIER 14		29.8				PHASE II	

BRIDGE NO. 124143

NOTICE: THE OFFICIAL RECORD OF THIS SHEET IS THE ELECTRONIC FILE DIGITALLY SIGNED AND SEALED UNDER RULE 61G15-23.004, F.A.C.

REVISIONS					
DATE	BY	DESCRIPTION	DATE	BY	DESCRIPTION

Kisinger Campo & Associates Corp.
201 N. Franklin Street
Suite 400
Tampa, FL 33602
Alfredo Jose Layrisse, PE No. 75610

DRAWN BY: JHJ 10-21
CHECKED BY: BAH 10-21
DESIGNED BY: JHJ 10-21
CHECKED BY: BAH 10-21

LEE COUNTY PUBLIC WORKS
DEPARTMENT OF TRANSPORTATION

ROAD NO.	COUNTY	COUNTY PROJECT No
CR 865	LEE	CN160002

SHEET TITLE: SUMMARY OF STRUCTURES QUANTITIES (1 OF 7)

REF. DWG. NO.

PROJECT NAME: ESTERO BLVD. (CR 865) OVER BIG CARLOS PASS

SHEET NO. BQ-1

SUMMARY OF STRUCTURE QUANTITIES - BRIDGE NO. 124143

SECTION	PAY ITEM NO.	PAY ITEM DESCRIPTION	LOCATION	UNIT	QUANTITY		TOTAL		DESIGN NOTES	CONSTRUCTION REMARKS
					P	F	P	F		
SUBSTRUCTURE	400-4-5	CONCRETE CLASS IV, BRIDGE SUBSTRUCTURE	END BENT 1	CY	27.3		158.0		PHASE II	
			PIER 2		5.5				PHASE II	
			PIER 3		4.0				PHASE II	
			PIER 4		4.1				PHASE II	
			PIER 5		4.3				PHASE II	
			PIER 6		4.9				PHASE II	
			PIER 7		4.3				PHASE II	
			PIER 8		3.9				PHASE II	
			PIER 9		4.2				PHASE II	
			PIER 10		4.3				PHASE II	
			PIER 11		4.4				PHASE II	
			PIER 12		4.4				PHASE II	
			PIER 13		4.5				PHASE II	
			PIER 14		4.5				PHASE II	
			END BENT 15		48.2				PHASE II	
			END BENT 1		23.6				PHASE III	
			PIER 2		1.6				PHASE III	
	400-4-25	CLASS IV CONCRETE, MASS, SUBSTRUCTURE	PIER 2	CY	379.6		5126.1		PHASE II	
			PIER 3		339.8				PHASE II	
			PIER 4		361.6				PHASE II	
			PIER 5		383.0				PHASE II	
			PIER 6		432.1				PHASE II	
			PIER 7		449.3				PHASE II	
			PIER 8		456.1				PHASE II	
			PIER 9		452.7				PHASE II	
			PIER 10		411.6				PHASE II	
			PIER 11		390.4				PHASE II	
			PIER 12		366.7				PHASE II	
			PIER 13		351.9				PHASE II	
			PIER 14		329.4				PHASE II	
			PIER 2		22.1				PHASE III	
	415-1-5	REINFORCING STEEL- BRIDGE SUBSTRUCTURE	END BENT 1	LB	3855		1205179		PHASE II	
			PIER 2		118946				PHASE II	
			PIER 3		76883				PHASE II	
			PIER 4		81250				PHASE II	
			PIER 5		88590				PHASE II	
			PIER 6		94085				PHASE II	
			PIER 7		97407				PHASE II	
			PIER 8		98700				PHASE II	
			PIER 9		100266				PHASE II	
			PIER 10		96272				PHASE II	
			PIER 11		92208				PHASE II	
			PIER 12		85437				PHASE II	
			PIER 13		81083				PHASE II	
			PIER 14		74772				PHASE II	
			END BENT 15		7095				PHASE II	
			END BENT 1		3218				PHASE III	
			PIER 2		5112				PHASE III	
	462-2-14	POST TENSIONING TENDONS, SUBSTRUCTURE BAR WITH GROUT	PIER 2	LB	4296.0		4296		PHASE III	
	524-2-2	CONCRETE SLOPE PAVEMENT, NON-REINFORCED, 4"	BEGIN BRIDGE	SY	10.0		36		PHASE II	
			END BRIDGE		18.0				PHASE II	
			BEGIN BRIDGE		8.0				PHASE III	
	LC03	CLEARANCE GAUGE SIGN	BRIDGE	EA	2.0		2		PHASE III	

BRIDGE NO. 124143

NOTICE: THE OFFICIAL RECORD OF THIS SHEET IS THE ELECTRONIC FILE DIGITALLY SIGNED AND SEALED UNDER RULE 61G15-23.004, F.A.C.

REVISIONS

DATE	BY	DESCRIPTION	DATE	BY	DESCRIPTION

Kisinger Campo & Associates Corp.
201 N. Franklin Street
Suite 400
Tampa, FL 33602
Alfredo Jose Layrisse, PE No. 75610

DRAWN BY: JHJ 10-21
CHECKED BY: BAH 10-21
DESIGNED BY: JHJ 10-21
CHECKED BY: BAH 10-21

LEE COUNTY PUBLIC WORKS
DEPARTMENT OF TRANSPORTATION

ROAD NO.	COUNTY	COUNTY PROJECT No
CR 865	LEE	CN160002

SHEET TITLE: SUMMARY OF STRUCTURES QUANTITIES (2 OF 7)

REF. DWG. NO.

PROJECT NAME: ESTERO BLVD. (CR 865) OVER BIG CARLOS PASS

SHEET NO. BQ-2

SUMMARY OF STRUCTURE QUANTITIES - BRIDGE NO. 124143

SECTION	PAY ITEM NO.	PAY ITEM DESCRIPTION	LOCATION	UNIT	QUANTITY		TOTAL		DESIGN NOTES	CONSTRUCTION REMARKS
					P	F	P	F		
APPROACH SLABS	400-2-10	CLASS II CONCRETE, APPROACH SLABS	APPROACH SLAB 1	CY	37.4		144.4		PHASE II	
			APPROACH SLAB 2		72.2				PHASE II	
			APPROACH SLAB 1		34.8				PHASE III	
	415-1-9	REINFORCING STEEL- APPROACH SLABS	APPROACH SLAB 1	LB	6987		26597		PHASE II	
			APPROACH SLAB 2		13280				PHASE II	
			APPROACH SLAB 1		6330				PHASE III	
SUPERSTRUCTURE	400-4-4	CONCRETE CLASS IV, SUPERSTRUCTURE	RAILING CURB	CY	53.0		4300.8		PHASE II	
			OUTLOOK		8.4				PHASE II	
			UNIT 1		181.6				PHASE II	
			UNIT 2		205.8				PHASE II	
			UNIT 3		580.5				PHASE II	
			UNIT 4		291.9				PHASE II	
			UNIT 5		935.2				PHASE II	
			UNIT 6		313.7				PHASE II	
			UNIT 7		285.3				PHASE II	
			UNIT 8		580.5				PHASE II	
			UNIT 9		608.8				PHASE II	
			RAILING CURB		4.5				PHASE III	
			UNIT 1		164.6				PHASE III	
			UNIT 2		87.0				PHASE III	
	400-7-1	BRIDGE DECK GROOVING	UNIT 1	SY	462		10567		PHASE II	
			UNIT 2		466				PHASE II	
			UNIT 3		1467				PHASE II	
			UNIT 4		734				PHASE II	
			UNIT 5		2201				PHASE II	
			UNIT 6		734				PHASE II	
			UNIT 7		734				PHASE II	
			UNIT 8		1467				PHASE II	
			UNIT 9		1467				PHASE II	
			UNIT 1		451				PHASE III	
			UNIT 2		384				PHASE III	
	400-9-1	BRIDGE DECK PLANING	UNIT 1	SY	462		10567		PHASE II	
			UNIT 2		466				PHASE II	
			UNIT 3		1467				PHASE II	
			UNIT 4		734				PHASE II	
			UNIT 5		2201				PHASE II	
			UNIT 6		734				PHASE II	
			UNIT 7		734				PHASE II	
			UNIT 8		1467				PHASE II	
			UNIT 9		1467				PHASE II	
			UNIT 1		451				PHASE III	
			UNIT 2		384				PHASE III	
	400-147	COMPOSITE NEOPRENE PADS	END BENT 1	CF	2.4		107.5		PHASE II	
			PIER 2		5.3				PHASE II	
			PIER 3		7.6				PHASE II	
			PIER 4		7.6				PHASE II	
			PIER 5		7.6				PHASE II	
			PIER 6		7.6				PHASE II	
			PIER 7		7.6				PHASE II	
			PIER 8		7.6				PHASE II	
			PIER 9		7.6				PHASE II	
			PIER 10		7.6				PHASE II	
			PIER 11		7.6				PHASE II	
			PIER 12		7.6				PHASE II	
			PIER 13		7.6				PHASE II	
			PIER 14		7.6				PHASE II	
			END BENT 15		3.8				PHASE II	
			END BENT 1		1.9				PHASE III	
			PIER 2		2.9				PHASE III	

BRIDGE NO. 124143

NOTICE: THE OFFICIAL RECORD OF THIS SHEET IS THE ELECTRONIC FILE DIGITALLY SIGNED AND SEALED UNDER RULE 61G15-23.004, F.A.C.

REVISIONS

DATE	BY	DESCRIPTION	DATE	BY	DESCRIPTION

Kisinger Campo & Associates Corp.
201 N. Franklin Street
Suite 400
Tampa, FL 33602
Alfredo Jose Layrisse, PE No. 75610

DRAWN BY: JHJ 10-21
CHECKED BY: BAH 10-21
DESIGNED BY: JHJ 10-21
CHECKED BY: BAH 10-21

LEE COUNTY PUBLIC WORKS
DEPARTMENT OF TRANSPORTATION

ROAD NO.	COUNTY	COUNTY PROJECT No
CR 865	LEE	CN160002

SHEET TITLE: SUMMARY OF STRUCTURES QUANTITIES (3 OF 7)

REF. DWG. NO.:

PROJECT NAME: ESTERO BLVD. (CR 865) OVER BIG CARLOS PASS

SHEET NO.: BQ-3

SUMMARY OF STRUCTURE QUANTITIES - BRIDGE NO. 124143

SECTION	PAY ITEM NO.	PAY ITEM DESCRIPTION	LOCATION	UNIT	QUANTITY P	QUANTITY F	TOTAL P	TOTAL F	DESIGN NOTES	CONSTRUCTION REMARKS
SUPERSTRUCTURE	415-1-4	REINFORCING STEEL- BRIDGE SUPERSTRUCTURE	UNIT 1	LB	44554		804158		PHASE II	
			UNIT 2		51054				PHASE II	
			UNIT 3		106626				PHASE II	
			UNIT 4		57399				PHASE II	
			UNIT 5		159098				PHASE II	
			UNIT 6		57109				PHASE II	
			UNIT 7		52751				PHASE II	
			UNIT 8		105766				PHASE II	
			UNIT 9		111727				PHASE II	
			UNIT 1		37733				PHASE III	
			UNIT 2		20341				PHASE III	
	450-2-78	PRESTRESSED BEAMS: FLORIDA-I BEAM 78"	SPAN 1	LF	864		18270		PHASE II	
			SPAN 2		965				PHASE II	
			SPAN 3		1287				PHASE II	
			SPAN 4		1286				PHASE II	
			SPAN 5		1286				PHASE II	
			SPAN 6		1285				PHASE II	
			SPAN 7		1285				PHASE II	
			SPAN 8		1285				PHASE II	
			SPAN 9		1285				PHASE II	
			SPAN 10		1287				PHASE II	
			SPAN 11		1287				PHASE II	
			SPAN 12		1286				PHASE II	
			SPAN 13		1285				PHASE II	
			SPAN 14		1284				PHASE II	
			SPAN 1		691				PHASE III	
			SPAN 2		322				PHASE III	
	458-1-11	BRIDGE DECK EXPANSION JOINT, NEW CONSTRUCTION, F&I POURED JOINT WITH BACKER ROD	END BENT 1	LF	33		610		PHASE II	
			PIER 2		43				PHASE II	
			PIER 3		61				PHASE II	
			PIER 5		61				PHASE II	
			PIER 6		61				PHASE II	
			PIER 9		61				PHASE II	
			PIER 10		61				PHASE II	
			PIER 11		61				PHASE II	
			PIER 13		61				PHASE II	
			END BENT 15		61				PHASE II	
			END BENT 1		28				PHASE III	
			PIER 2		18				PHASE III	
	506-3	BRIDGE DRAINS	BRIDGE	EA	7		7		PHASE II	

BRIDGE NO. 124143

NOTICE: THE OFFICIAL RECORD OF THIS SHEET IS THE ELECTRONIC FILE DIGITALLY SIGNED AND SEALED UNDER RULE 61G15-23.004, F.A.C.

REVISIONS

DATE	BY	DESCRIPTION	DATE	BY	DESCRIPTION

Kisinger Campo & Associates Corp.
201 N. Franklin Street
Suite 400
Tampa, FL 33602
Alfredo Jose Layrisse, PE No. 75610

DRAWN BY: JHJ 10-21
CHECKED BY: BAH 10-21
DESIGNED BY: JHJ 10-21
CHECKED BY: BAH 10-21

LEE COUNTY PUBLIC WORKS
DEPARTMENT OF TRANSPORTATION

ROAD NO.	COUNTY	COUNTY PROJECT No
CR 865	LEE	CN160002

SHEET TITLE: SUMMARY OF STRUCTURES QUANTITIES (4 OF 7)

REF. DWG. NO.:

PROJECT NAME: ESTERO BLVD. (CR 865) OVER BIG CARLOS PASS

SHEET NO.: BQ-4

SUMMARY OF STRUCTURE QUANTITIES - BRIDGE NO. 124143

SECTION	PAY ITEM NO.	PAY ITEM DESCRIPTION	LOCATION	UNIT	QUANTITY		TOTAL		DESIGN NOTES	CONSTRUCTION REMARKS
					P	F	P	F		
RAILING/ BARRIERS	515-2-311	PEDESTRIAN/ BICYCLE RAILING, ALUMINUM ONLY, 42" TYPE 1	TEMPORARY SIDEWALK	LF	213		4865		PHASE I	
			APPROACH SLAB 1		30				PHASE II	
			BRIDGE		4198				PHASE II	
			APPROACH SLAB 2		60				PHASE II	
			APPROACH SLAB 1		30				PHASE III	
			BRIDGE		334				PHASE III	
	519-78	BOLLARDS	BEGIN BRIDGE	EA	2		2		SEE MAINTENANCE ACCESS DETAIL SHEETS IN ROADWAY PLANS	
	521-5-6 MOD	CONCRETE TRAFFIC RAILING, CORRAL WITH CURB	BRIDGE	LF	3542		4652		PHASE II	
			APPROACH SLAB 2		60				PHASE II	
			APPROACH SLAB 1		30				PHASE III	
			BRIDGE		334				PHASE III	
			APPROACH SLAB 1		30				PHASE IV	
			BRIDGE		656				PHASE IV	
	630-2-16	CONDUIT, FURNISH & INSTALL, EMBEDDED CONCRETE BARRIERS AND TRAFFIC RAILINGS	BRIDGE	LF	10626		13956		PHASE II	
			APPROACH SLAB 2		180				PHASE II	
			APPROACH SLAB 1		90				PHASE III	
			BRIDGE		1002				PHASE III	
			APPROACH SLAB 1		90				PHASE IV	
			BRIDGE		1968				PHASE IV	
SLOPE PROTECTION	530-1-100	RIPRAP, SAND-CEMENT BAGS	BEGIN BRIDGE	CY	12.0		44.5		PHASE II	
			END BRIDGE		22.2				PHASE II	
			BEGIN BRIDGE		10.3				PHASE III	
	530-3-3	RIPRAP- RUBBLE, BANK AND SHORE	BEGIN BRIDGE	TN	134.2		502.0		PHASE II	
			END BRIDGE		251.0				PHASE II	
			BEGIN BRIDGE		116.8				PHASE III	
	530-4-4	ARTICULATING CONCRETE BLOCK REVETMENT SYSTEM, THICKNESS 4"	BEGIN BRIDGE	SY	152		241		PHASE II	
			BEGIN BRIDGE		89				PHASE III	
	530-74	BEDDING STONE	BEGIN BRIDGE	TN	66.7		250.0		PHASE II	
			END BRIDGE		125.0				PHASE II	
			BEGIN BRIDGE		58.3				PHASE III	
UTILITIES	1050-51-212	UTILITY PIPE- DUCTILE IRON/CAST IRON, FURNISH & INSTALL, WATER/SEWER, 12"	BRIDGE	LF	2326		2326		PHASE III	
	LC01	UTILITY HANGER	BRIDGE	LF	4532		4532		PHASE III	
	LC04	4" (OR EQUIVALENT) ID HDPE CONDUIT SMOOTH OUT RIBBED IN	BRIDGE	LF	2266		2266		PHASE III	

BRIDGE NO. 124143

NOTICE: THE OFFICIAL RECORD OF THIS SHEET IS THE ELECTRONIC FILE DIGITALLY SIGNED AND SEALED UNDER RULE 61G15-23.004, F.A.C.

REVISIONS

DATE	BY	DESCRIPTION	DATE	BY	DESCRIPTION

Kisinger Campo & Associates Corp.
201 N. Franklin Street
Suite 400
Tampa, FL 33602
Alfredo Jose Layrisse, PE No. 75610

DRAWN BY: JHJ 10-21
CHECKED BY: BAH 10-21
DESIGNED BY: JHJ 10-21
CHECKED BY: BAH 10-21

LEE COUNTY PUBLIC WORKS
DEPARTMENT OF TRANSPORTATION

ROAD NO.	COUNTY	COUNTY PROJECT No
CR 865	LEE	CN160002

SHEET TITLE: SUMMARY OF STRUCTURES QUANTITIES (5 OF 7)

REF. DWG. NO.:

PROJECT NAME: ESTERO BLVD. (CR 865) OVER BIG CARLOS PASS

SHEET NO.: BQ-5

SUMMARY OF STRUCTURE QUANTITIES - BIG CARLOS PASS - FISHING PIER

SECTION	PAY ITEM NO.	PAY ITEM DESCRIPTION	LOCATION	UNIT	QUANTITY		TOTAL		DESIGN NOTES	CONSTRUCTION REMARKS
					P	F	P	F		
FOUNDATION	455-34-5	PRESTRESSED CONCRETE PILING, 24" SQ	BENT 1-2	LF	352		2454			
			BENT 1-3		352					
			BENT 1-4		319					
			BENT 2-2		319					
			BENT 2-3		329					
			BENT 2-4		341					
			BENT 3-2		231					
			BENT 3-3		211					
	455-143-5	TEST PILES - PRESTRESSED CONCRETE, 24" SQ	BENT 1-2	LF	191		1350			
			BENT 1-3		191					
			BENT 1-4		175					
			BENT 2-2		175					
			BENT 2-3		180					
			BENT 2-4		186					
			BENT 3-2		131					
			BENT 3-3		121					
SUBSTRUCTURE	400-4-5	CONCRETE CLASS IV, BRIDGE SUBSTRUCTURE	BENT 1-2	CY	4.5		35.5			
			BENT 1-3		4.5					
			BENT 1-4		4.5					
			BENT 2-2		4.5					
			BENT 2-3		4.5					
			BENT 2-4		4.5					
			BENT 3-2		4.5					
			BENT 3-3		3.8					
	400-4-25	CONCRETE CLASS IV, MASS- SUBSTRUCTURE	PIER 9	CY	101.2		296.6			
			PIER 10		97.7					
			PIER 11		97.7					
	415-1-5	REINFORCING STEEL, BRIDGE SUBSTRUCTURE	PIER 9	LB	10330		34132			
			PIER 10		11901					
			PIER 11		11901					

BRIDGE NO. 124143

NOTICE: THE OFFICIAL RECORD OF THIS SHEET IS THE ELECTRONIC FILE DIGITALLY SIGNED AND SEALED UNDER RULE 61G15-23.004, F.A.C.

REVISIONS					
DATE	BY	DESCRIPTION	DATE	BY	DESCRIPTION

Kisinger Campo & Associates Corp.
201 N. Franklin Street
Suite 400
Tampa, FL 33602
Alfredo Jose Layrisse, PE No. 75610

DRAWN BY: JHJ 10-21
CHECKED BY: BAH 10-21
DESIGNED BY: JHJ 10-21
CHECKED BY: BAH 10-21

LEE COUNTY PUBLIC WORKS
DEPARTMENT OF TRANSPORTATION

ROAD NO.	COUNTY	COUNTY PROJECT No
CR 865	LEE	CN160002

SHEET TITLE: SUMMARY OF STRUCTURES QUANTITIES (6 OF 7)

REF. DWG. NO.:

PROJECT NAME: ESTERO BLVD. (CR 865) OVER BIG CARLOS PASS

SHEET NO.: BQ-6

SUMMARY OF STRUCTURE QUANTITIES - BIG CARLOS PASS - FISHING PIER

SECTION	PAY ITEM NO.	PAY ITEM DESCRIPTION	LOCATION	UNIT	QUANTITY		TOTAL		DESIGN NOTES	CONSTRUCTION REMARKS
					P	F	P	F		
SUPERSTRUCTURE	400-4-4	CONCRETE CLASS IV, BRIDGE SUPERSTRUCTURE	LIGHT POLE POSTS	CY	4.1		342.8			
			UNIT 1		137.8					
			UNIT 2		137.8					
			UNIT 3		63.1					
	400-148	PLAIN NEOPRENE BEARING PADS	BENT 1-1	CF	0.3		1.5			
			BENT 1-5		0.3					
			BENT 2-1		0.3					
			BENT 2-5		0.3					
			BENT 3-1		0.3					
	415-1-4	REINFORCING STEEL, BRIDGE SUPERSTRUCTURE	UNIT 1	LB	31986		94759			
			END BENT UNIT 1		1932					
			INT. BENT UNIT 1		3963					
			UNIT 2		31986					
			END BENT UNIT 2		1932					
			INT. BENT UNIT 2		3963					
			UNIT 3		14905					
			END BENT 3-1		966					
			INT. BENT 3-2		1321					
			END BENT 3-3		1245					
			LIGHT POLE POSTS		560					
	458-1-11	BRIDGE DECK EXPANSION JOINT, NEW CONSTRUCTION, F&I POURED JOINT WITH BACKER ROD	BENT 1-1	LF	21		105			
			BENT 1-5		21					
			BENT 2-1		21					
			BENT 2-5		21					
			BENT 3-1		21					
	630-2-16	CONDUIT, FURNISH & INSTALL, EMBEDDED CONCRETE BARRIERS AND TRAFFIC RAILINGS	BRIDGE DECK	LF	800		800			
RAILING/ BARRIERS	515-2-311	PEDESTRIAN/ BICYCLE RAILING, ALUMINUM, 42" TYPE 1	PIER 9	LF	61		715			
			UNIT 1		204					
			PIER 10		54					
			UNIT 2		233					
			PIER 11		38					
			UNIT 3		125					
	LC02	PEDESTRIAN/ BICYCLE RAILING, ALUMINUM, 36" TYPE 1 (ADA MODIFICATION)	PIER 9	LF	29		167			
			UNIT 1		73					
			PIER 10		22					
			UNIT 2		44					
LIGHTING	630-2-11	CONDUIT, FURNISH & INSTALL, OPEN TRENCH		LF	185		185			
	630-2-15	CONDUIT, FURNISH & INSTALL, BRIDGE MOUNT		LF	661		661			
	630-2-16	CONDUIT, FURNISH & INSTALL, EMBEDDED CONCRETE BARRIERS AND TRAFFIC RAILINGS		LF	420		420			
	635-2-11	PULL & SPICE BOX, F&I, 13" X 24" COVER SIZE		EA	6		6			
	635-3-12	JUNCTION BOX, FURNISH & INSTALL, MOUNTED		EA	8		8			
	635-3-13	JUNCTION BOX, FURNISH & INSTALL, EMBEDDED		EA	24		24			
	639-1-122	ELECTRICAL POWER SERVICE, F&I, UNDERGROUND, METER PUCHASED BY CONTRACTOR		AS	1		1			
	641-2-11	PRESTRESSED CONCRETE POLE, F&I, TYPE P-11 PEDESTAL		EA	1		1			
	685-1-14	UNINTERRUPTIBLE POWER SUPPLY, FURNISH AND INSTALL, ONLINE/DOUBLE CONVERSION WITH CABINET		EA	1		1			
	715-1-12	LIGHTING CONDUCTORS, F&I, INSULATED, NO.8- 6		LF	9050		9050			
	715-7-11	LOAD CENTER, F&I, SECONDARY VOLTAGE		EA	1		1			

BRIDGE NO. 124143

NOTICE: THE OFFICIAL RECORD OF THIS SHEET IS THE ELECTRONIC FILE DIGITALLY SIGNED AND SEALED UNDER RULE 61G15-23.004, F.A.C.

REVISIONS

DATE	BY	DESCRIPTION	DATE	BY	DESCRIPTION

Kisinger Campo & Associates Corp.
201 N. Franklin Street
Suite 400
Tampa, FL 33602
Alfredo Jose Layrisse, PE No. 75610

DRAWN BY: JHJ 10-21
CHECKED BY: BAH 10-21
DESIGNED BY: JHJ 10-21
CHECKED BY: BAH 10-21

LEE COUNTY PUBLIC WORKS
DEPARTMENT OF TRANSPORTATION

ROAD NO.	COUNTY	COUNTY PROJECT No
CR 865	LEE	CN160002

SHEET TITLE: SUMMARY OF STRUCTURES QUANTITIES (7 OF 7)

REF. DWG. NO.:

PROJECT NAME: ESTERO BLVD. (CR 865) OVER BIG CARLOS PASS

SHEET NO.: BQ-7

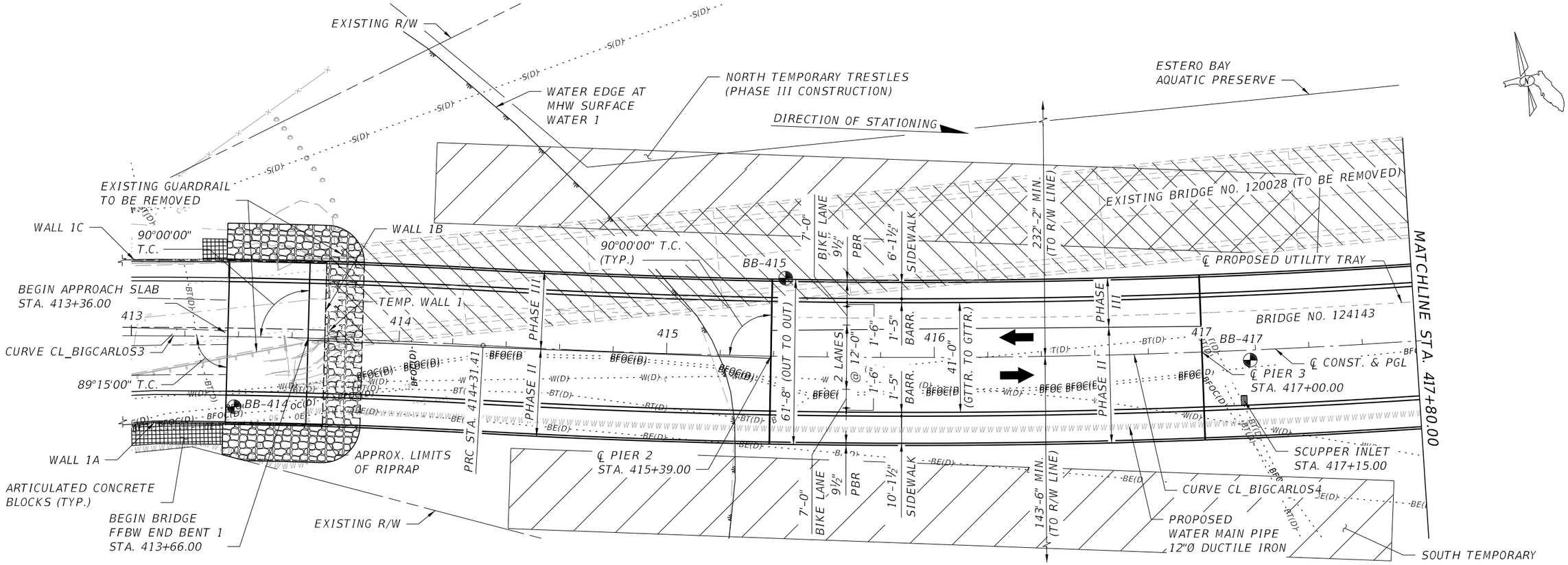

PARTIAL PLAN

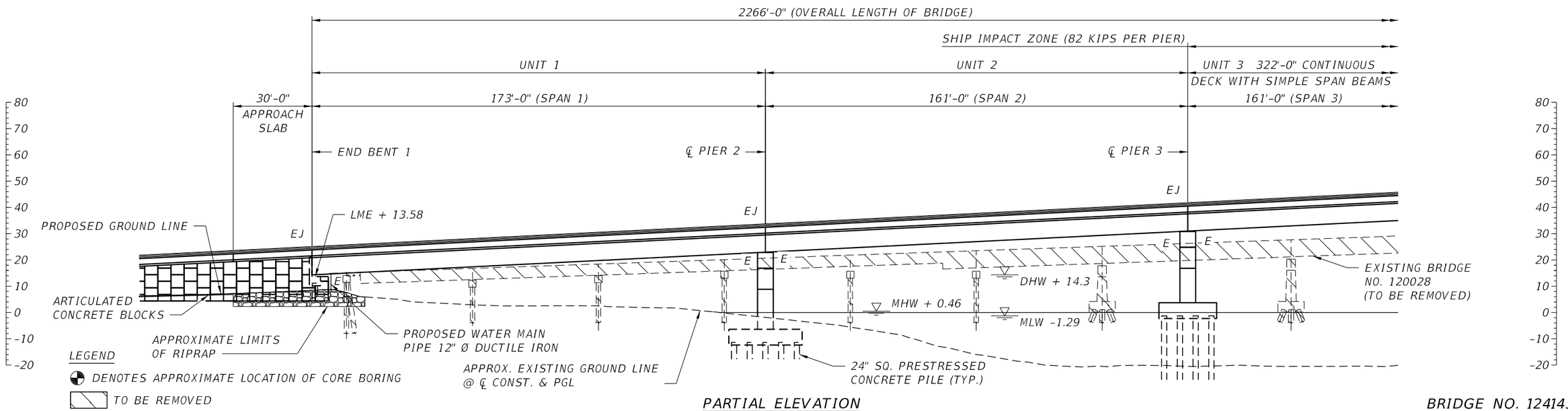

PARTIAL ELEVATION

BRIDGE NO. 124143

NOTICE: THE OFFICIAL RECORD OF THIS SHEET IS THE ELECTRONIC FILE DIGITALLY SIGNED AND SEALED UNDER RULE 61G15-23.004, F.A.C.

REVISIONS					
DATE	BY	DESCRIPTION	DATE	BY	DESCRIPTION

Kisinger Campo & Associates Corp.
201 N. Franklin Street
Suite 400
Tampa, FL 33602
Alfredo Jose Layrisse, PE No. 75610

DRAWN BY:	CHECKED BY:	DESIGNED BY:	CHECKED BY:
ARF 06-19	AJL 06-19	CEL 06-19	ATB 06-19

LEE COUNTY PUBLIC WORKS DEPARTMENT OF TRANSPORTATION

ROAD NO.	COUNTY	COUNTY PROJECT No
CR 865	LEE	CN160002

SHEET TITLE: PLAN AND ELEVATION (1 OF 6)

REF. DWG. NO.:

PROJECT NAME: ESTERO BLVD. (CR 865) OVER BIG CARLOS PASS

SHEET NO.: B1-1

jhanna 2/24/2022 3:10:28 PM c:\pwworkingdir\kca-pw.bentley.com_kca-pw-01\josh hanna\dms00783\B1PlanElev01.dgn

NOTES:
REFER TO THE CONTRACT DOCUMENTS FOR ITEMS TO BE SALVAGED FROM THE EXISTING BRIDGE AND LOCATION FOR SALVAGE DELIVERY. ITEMS ARE LOCATED AT, BUT NOT LIMITED TO, THE TRUNNION PIER, CONTROL HOUSE, ELECTRICAL PANELS, MACHINERY, GATE ARMS, AND FENDER SYSTEM.

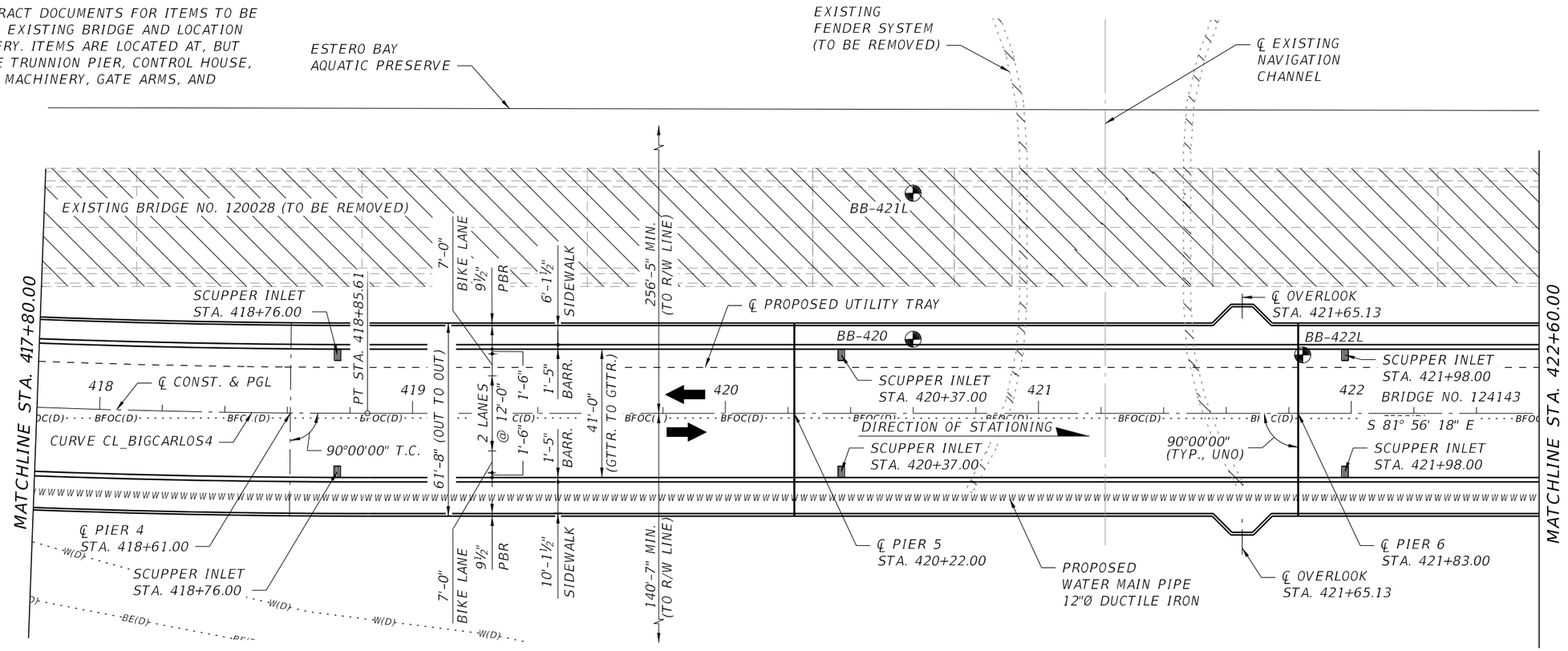

PARTIAL PLAN

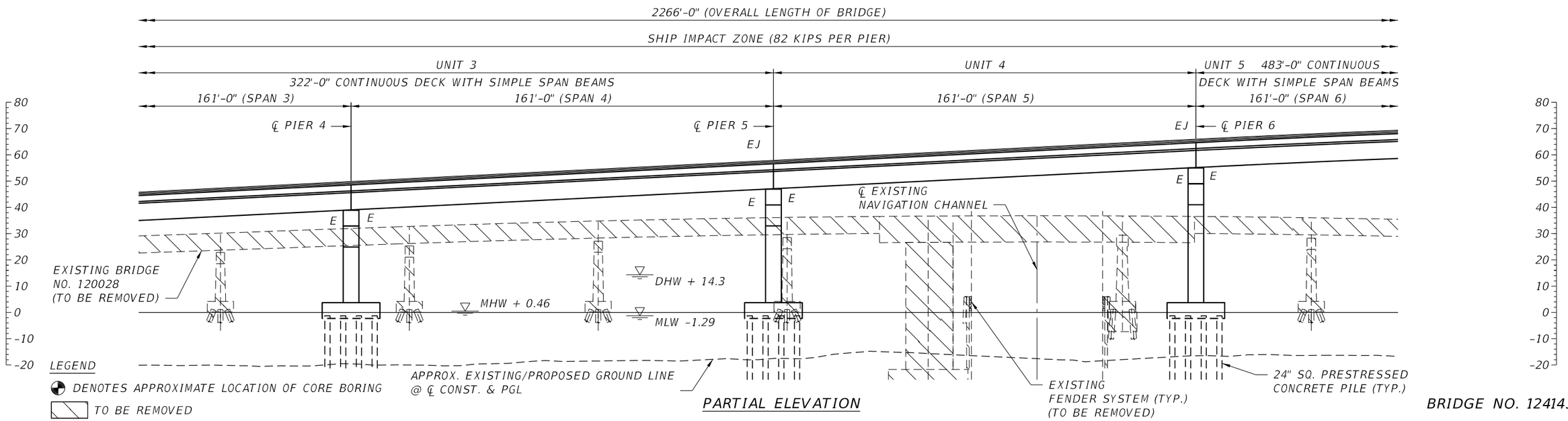

PARTIAL ELEVATION

BRIDGE NO. 124143

NOTICE: THE OFFICIAL RECORD OF THIS SHEET IS THE ELECTRONIC FILE DIGITALLY SIGNED AND SEALED UNDER RULE 61G15-23.004, F.A.C.

REVISIONS					
DATE	BY	DESCRIPTION	DATE	BY	DESCRIPTION

Kisinger Campo & Associates Corp.
201 N. Franklin Street
Suite 400
Tampa, FL 33602
Alfredo Jose Layrisse, PE No. 75610

DRAWN BY:	CHECKED BY:	DESIGNED BY:	CHECKED BY:
ARF 06-19	AJL 06-19	CEL 06-19	ATB 06-19

LEE COUNTY PUBLIC WORKS DEPARTMENT OF TRANSPORTATION

ROAD NO.	COUNTY	COUNTY PROJECT No
CR 865	LEE	CN160002

SHEET TITLE: PLAN AND ELEVATION (2 OF 6)

REF. DWG. NO.:

PROJECT NAME: ESTERO BLVD. (CR 865) OVER BIG CARLOS PASS

SHEET NO.: B1-2

jhanna 2/24/2022 3:10:55 PM c:\pwworkingdir\kca-pw.bentley.com_kca-pw-01\josh hanna\dms00783\B1PlanElev02.dgn

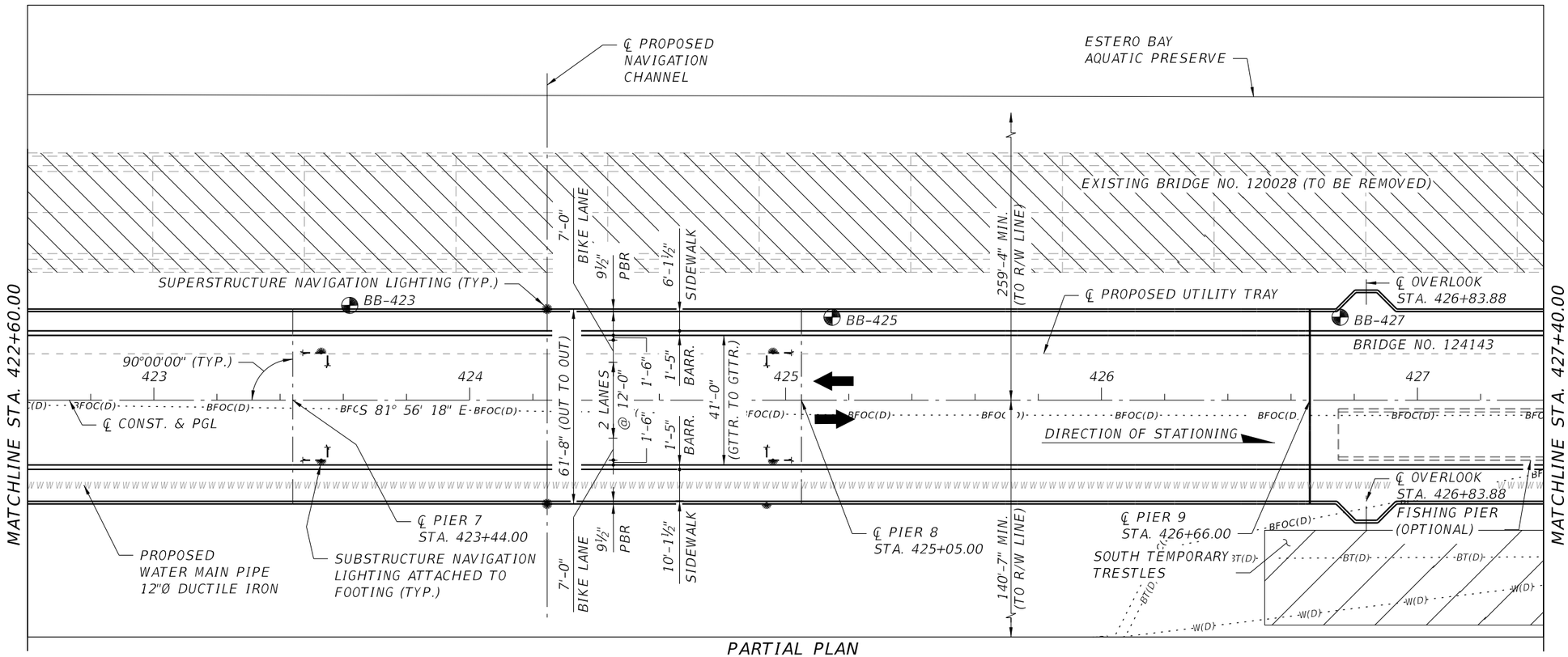

NOTICE: THE OFFICIAL RECORD OF THIS SHEET IS THE ELECTRONIC FILE DIGITALLY SIGNED AND SEALED UNDER RULE 61G15-23.004, F.A.C.

REVISIONS					
DATE	BY	DESCRIPTION	DATE	BY	DESCRIPTION

Kisinger Campo & Associates Corp.
201 N. Franklin Street
Suite 400
Tampa, FL 33602
Alfredo Jose Layrisse, PE No. 75610

DRAWN BY:	CHECKED BY:	DESIGNED BY:	CHECKED BY:
ARF 06-19	AJL 06-19	CEL 06-19	ATB 06-19

LEE COUNTY PUBLIC WORKS DEPARTMENT OF TRANSPORTATION

ROAD NO.	COUNTY	COUNTY PROJECT No
CR 865	LEE	CN160002

SHEET TITLE: PLAN AND ELEVATION (3 OF 6)

REF. DWG. NO.:

PROJECT NAME: ESTERO BLVD. (CR 865) OVER BIG CARLOS PASS

SHEET NO.: B1-3

jhanna 2/24/2022 3:11:25 PM c:\pwworkingdir\kca-pw.bentley.com_kca-pw-01\josh hanna\dms00783\B1PlanElev03.dgn

NOTE TO REVIEWER:
PADDLING TRAIL RELOCATION IS
UNDER COORDINATION.

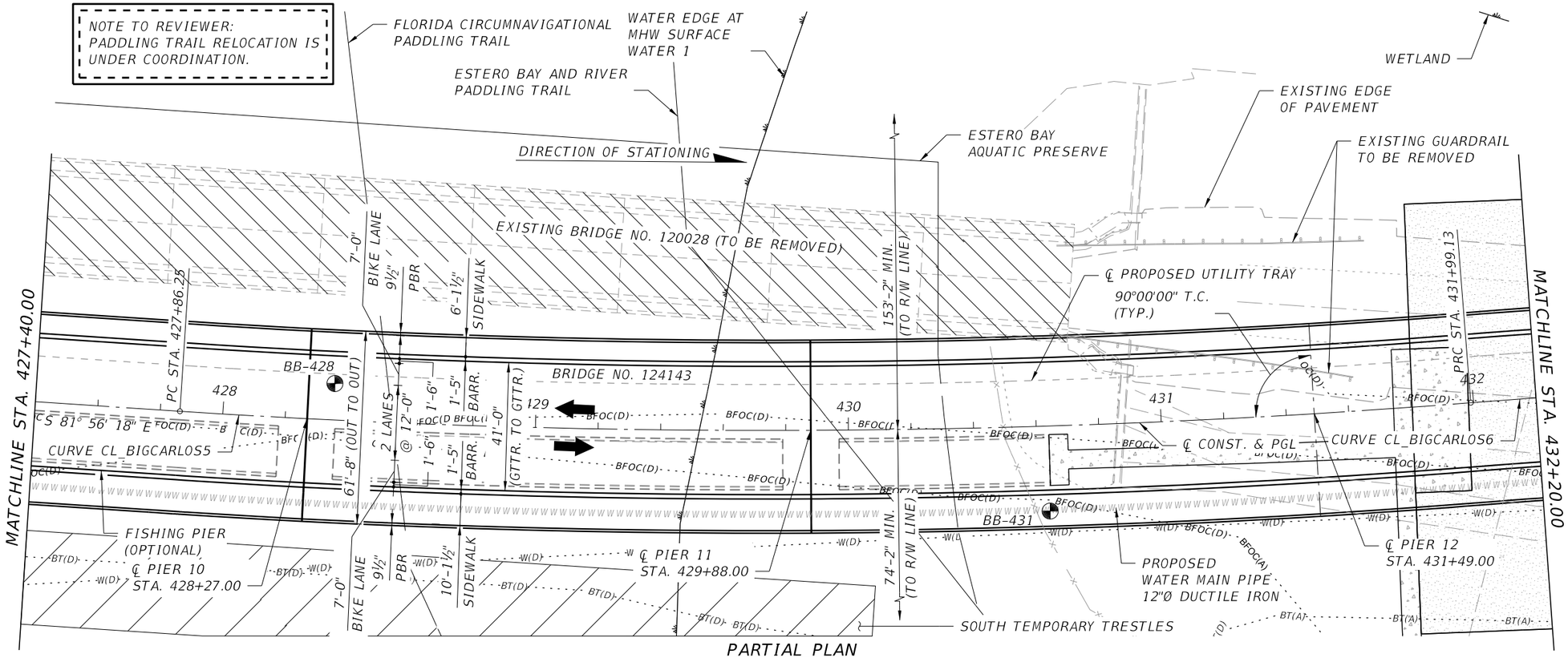

PARTIAL PLAN

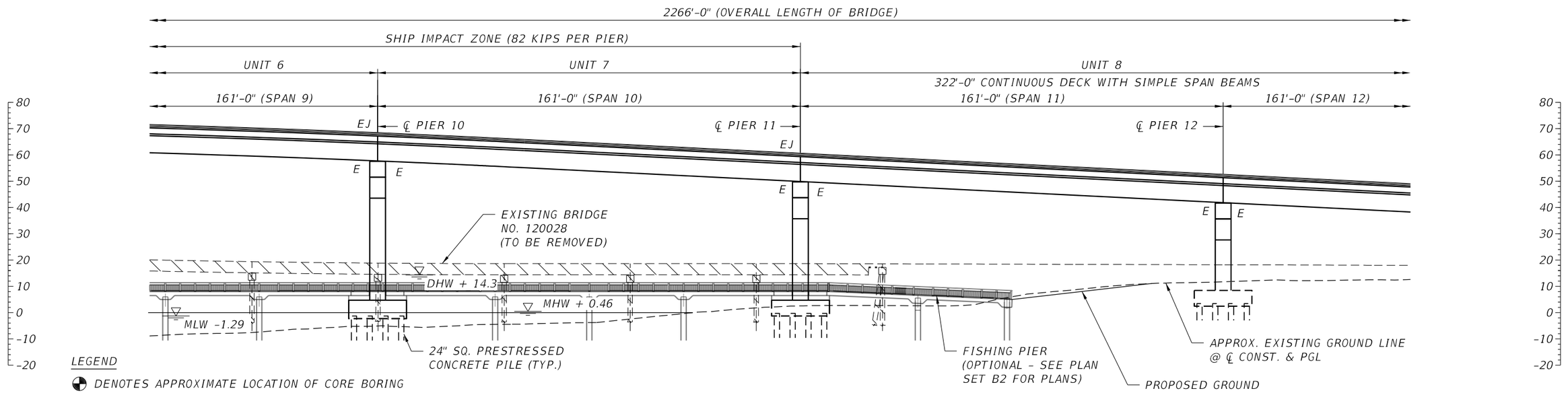

LEGEND

DENOTES APPROXIMATE LOCATION OF CORE BORING

TO BE REMOVED

PARTIAL ELEVATION

BRIDGE NO. 124143

NOTICE: THE OFFICIAL RECORD OF THIS SHEET IS THE ELECTRONIC FILE DIGITALLY SIGNED AND SEALED UNDER RULE 61G15-23.004, F.A.C.

REVISIONS					
DATE	BY	DESCRIPTION	DATE	BY	DESCRIPTION

Kisinger Campo & Associates Corp.
201 N. Franklin Street
Suite 400
Tampa, FL 33602
Alfredo Jose Layrisse, PE No. 75610

DRAWN BY:	CHECKED BY:	DESIGNED BY:	CHECKED BY:
ARF 06-19	AJL 06-19	CEL 06-19	ATB 06-19

LEE COUNTY PUBLIC WORKS
DEPARTMENT OF TRANSPORTATION

ROAD NO.	COUNTY	COUNTY PROJECT No
CR 865	LEE	CN160002

SHEET TITLE: PLAN AND ELEVATION (4 OF 6)

REF. DWG. NO.:

PROJECT NAME: ESTERO BLVD. (CR 865) OVER BIG CARLOS PASS

SHEET NO.: B1-4

jhanna 2/24/2022 3:11:53 PM c:\pwworkingdir\kca-pw.bentley.com_kca-pw-01\josh hanna\dms00783\B1PlanElev04.dgn

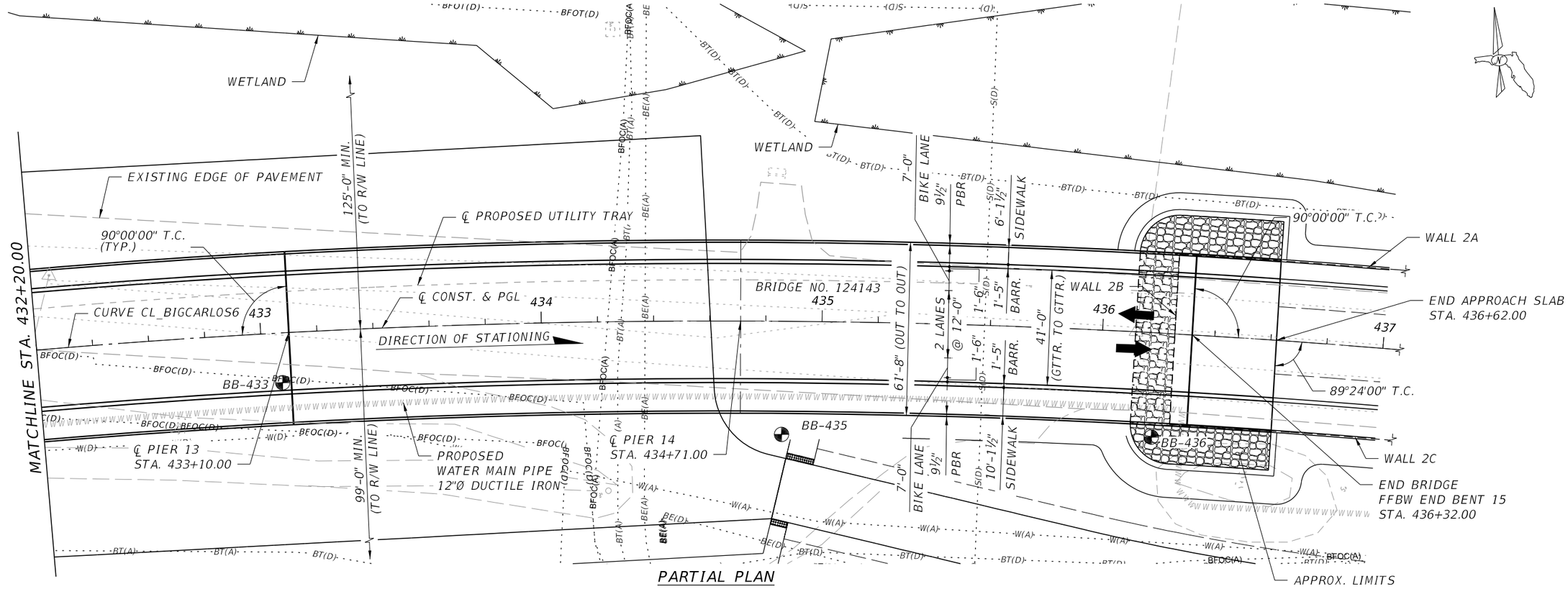

PARTIAL PLAN

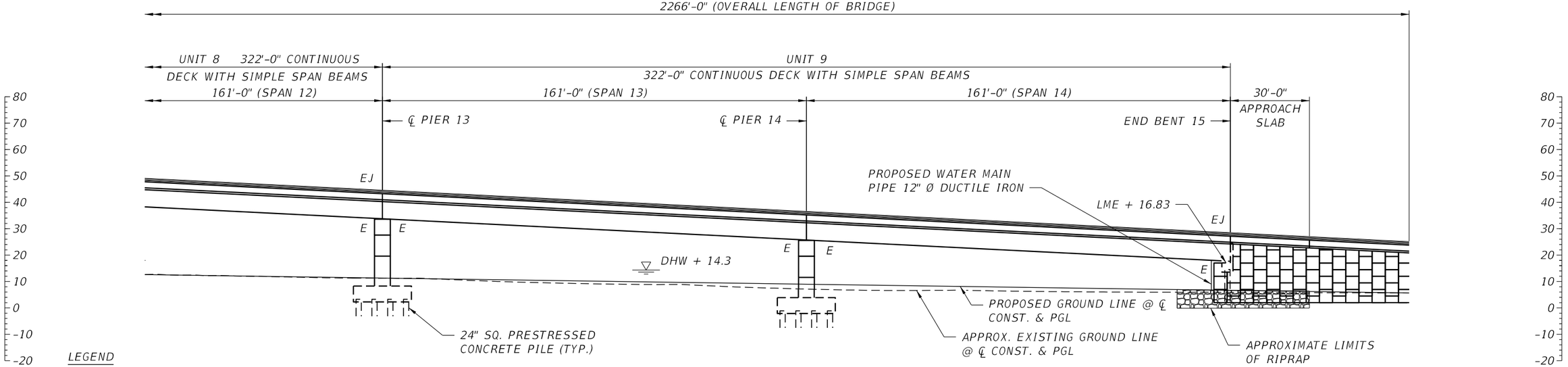

LEGEND

DENOTES APPROXIMATE LOCATION OF CORE BORING

PARTIAL ELEVATION

BRIDGE NO. 124143

NOTICE: THE OFFICIAL RECORD OF THIS SHEET IS THE ELECTRONIC FILE DIGITALLY SIGNED AND SEALED UNDER RULE 61G15-23.004, F.A.C.

REVISIONS					
DATE	BY	DESCRIPTION	DATE	BY	DESCRIPTION

Kisinger Campo & Associates Corp.
201 N. Franklin Street
Suite 400
Tampa, FL 33602
Alfredo Jose Layrisse, PE No. 75610

DRAWN BY:	CHECKED BY:	DESIGNED BY:	CHECKED BY:
ARF 06-19	AJL 06-19	CEL 06-19	ATB 06-19

LEE COUNTY PUBLIC WORKS
DEPARTMENT OF TRANSPORTATION

ROAD NO.	COUNTY	COUNTY PROJECT No
CR 865	LEE	CN160002

SHEET TITLE: PLAN AND ELEVATION (5 OF 6)

REF. DWG. NO.:

PROJECT NAME: ESTERO BLVD. (CR 865) OVER BIG CARLOS PASS

SHEET NO.: B1-5

jhanna 2/24/2022 3:12:16 PM c:\pwworkingdir\kca-pw.bentley.com_kca-pw-01\josh hanna\dms00783\B1PlanElev05.dgn

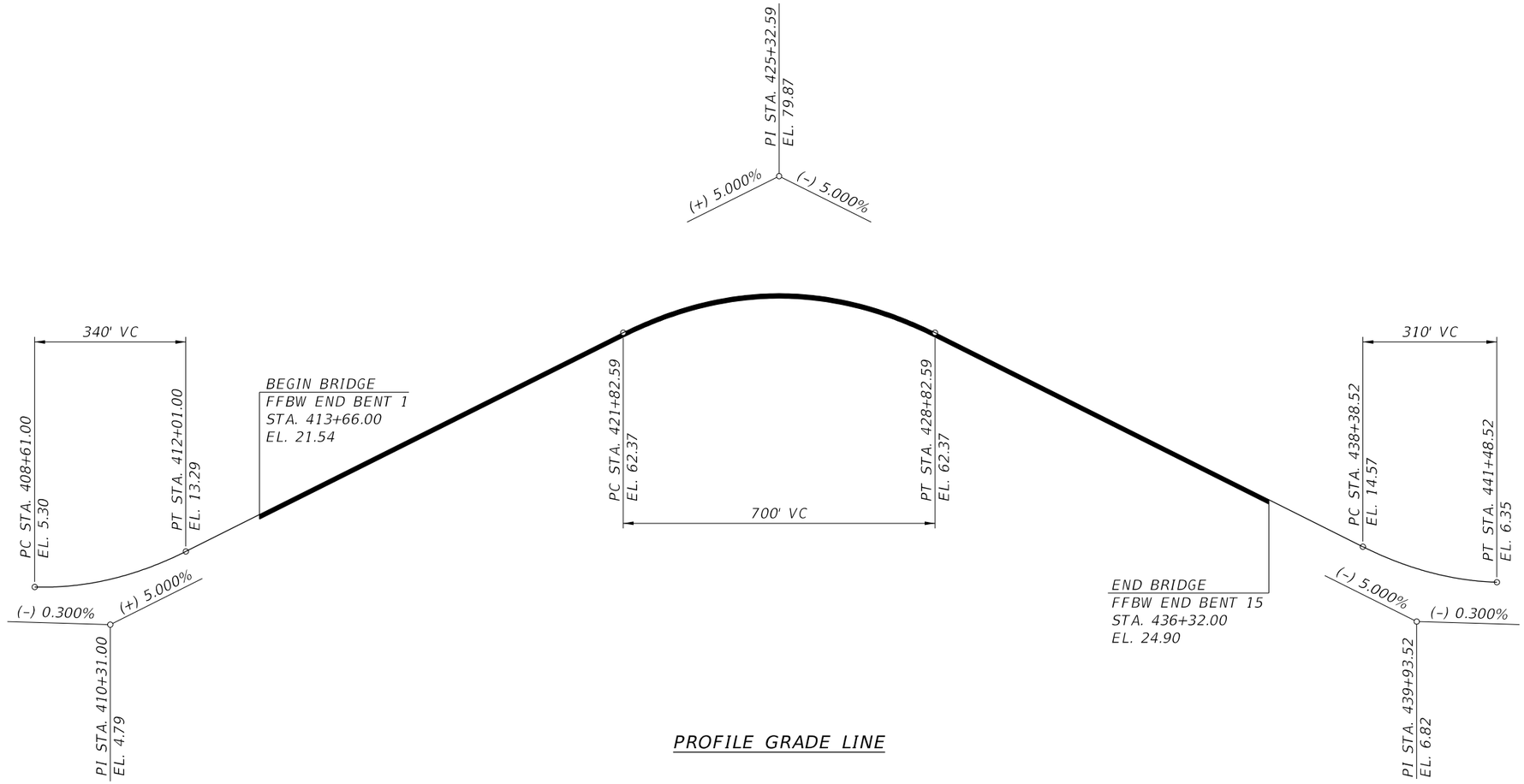

PROFILE GRADE LINE

TRAFFIC DATA

CURRENT YEAR = 2017 AADT = 11,100
ESTIMATED OPENING YEAR = 2026 AADT = 12,600
ESTIMATED DESIGN YEAR = 2046 AADT = 16,000
K = 9.0% D = 54.7% T = 3.7% (24 HOUR)
DESIGN HOUR T = 1.9%
DESIGN SPEED = 40 MPH

CURVE CL_BIGCARLOS3
P.I. STATION 411+41.30
DELTA = 14° 35' 02"(RT)
DEGREE = 2° 29' 59"
TANGENT = 293.28'
LENGTH = 583.40'
RADIUS = 2,292.00'
P.C. STATION 408+48.02
P.T. STATION 414+31.41
e = NC

CURVE CL_BIGCARLOS4
P.I. STATION 416+58.99
DELTA = 9° 05' 00" (LT)
DEGREE = 1° 59' 59"
TANGENT = 227.58'
LENGTH = 454.20'
RADIUS = 2,865.00'
P.C. STATION 414+31.41
P.T. STATION 418+85.61
e = NC

CURVE CL_BIGCARLOS5
P.I. STATION 429+93.05
DELTA = 8° 15' 24" (LT)
DEGREE = 1° 59' 59"
TANGENT = 206.79'
LENGTH = 412.87'
RADIUS = 2,865.00'
P.C. STATION 427+86.25
P.R.C. STATION 431+99.13
e = NC

CURVE CL_BIGCARLOS6
P.I. STATION 442+71.07
DELTA = 41° 01' 47" (RT)
DEGREE = 2° 00' 00"
TANGENT = 1,071.94'
LENGTH = 2,051.48'
RADIUS = 2,864.78'
P.R.C. STATION 431+99.13
P.T. STATION 452+50.60
e = NC

BRIDGE NO. 124143

REVISIONS					
DATE	BY	DESCRIPTION	DATE	BY	DESCRIPTION

Kisinger Campo & Associates Corp.
201 N. Franklin Street
Suite 400
Tampa, FL 33602
Alfredo Jose Layrisse, PE No. 75610

DRAWN BY: ARF 06-19
CHECKED BY: AJL 06-19
DESIGNED BY: CEL 06-19
CHECKED BY: AJL 06-19

LEE COUNTY PUBLIC WORKS
DEPARTMENT OF TRANSPORTATION

ROAD NO.	COUNTY	COUNTY PROJECT No
CR 865	LEE	CN160002

SHEET TITLE: PLAN AND ELEVATION (6 OF 6)
REF. DWG. NO.:
PROJECT NAME: ESTERO BLVD. (CR 865) OVER BIG CARLOS PASS
SHEET NO.: B1-6

NOTICE: THE OFFICIAL RECORD OF THIS SHEET IS THE ELECTRONIC FILE DIGITALLY SIGNED AND SEALED UNDER RULE 61G15-23.004, F.A.C.

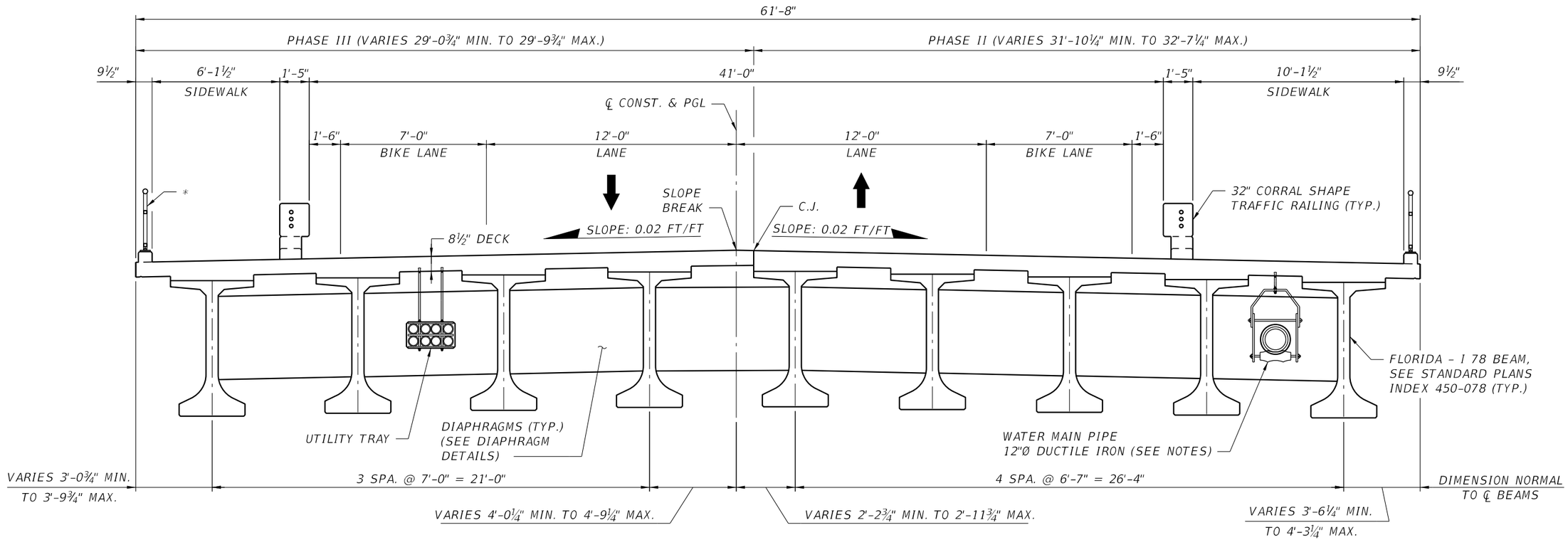

* 42" BRIDGE PEDESTRIAN/BICYCLE RAILING (ALUMINUM), SCHEME 2, INDEX 515-061 (TYP.)

TYPICAL SECTION
(SPAN 1)

NOTES:

1. FOR TYPICAL DETAILS FOR WATER MAIN PIPE, SEE SUPERSTRUCTURE DETAILS SHEET (2 OF 9).
2. HANGER DESIGN AND SPACING WILL BE PER MANUFACTURER'S RECOMMENDATIONS BASED ON ANTICIPATED LOADING. FOLLOW THE MANUFACTURER'S DETAILS FOR PIPE HANGER ASSEMBLY.

BRIDGE NO. 124143

REVISIONS					
DATE	BY	DESCRIPTION	DATE	BY	DESCRIPTION

Kisinger Campo & Associates Corp.
201 N. Franklin Street
Suite 400
Tampa, FL 33602
Alfredo Jose Layrisse, PE No. 75610

DRAWN BY: ARF 06-19
CHECKED BY: AJL 06-19
DESIGNED BY: CEL 06-19
CHECKED BY: AJR 06-19

LEE COUNTY PUBLIC WORKS
DEPARTMENT OF TRANSPORTATION

ROAD NO.	COUNTY	COUNTY PROJECT No
CR 865	LEE	CN160002

SHEET TITLE: TYPICAL SECTION (1 OF 2)

REF. DWG. NO.:

PROJECT NAME: ESTERO BLVD. (CR 865) OVER BIG CARLOS PASS

SHEET NO.: B1-7

NOTICE: THE OFFICIAL RECORD OF THIS SHEET IS THE ELECTRONIC FILE DIGITALLY SIGNED AND SEALED UNDER RULE 61G15-23.004, F.A.C.

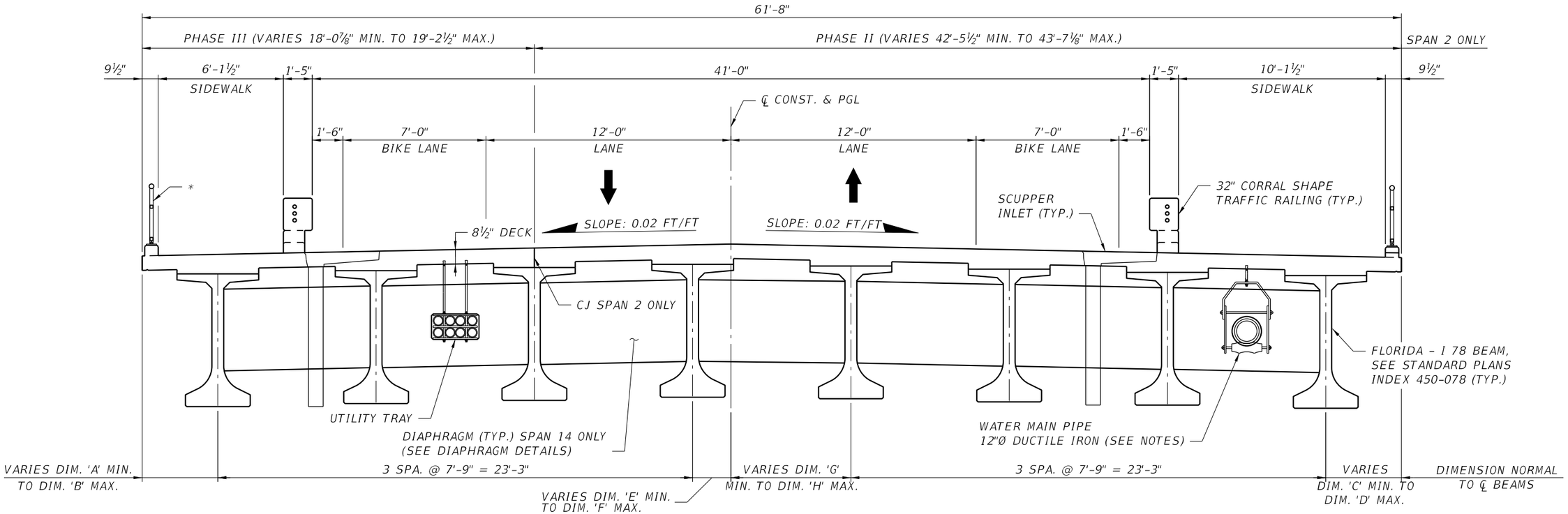

* 42" BRIDGE PEDESTRIAN/BICYCLE RAILING (ALUMINUM), SCHEME 2, INDEX 515-061 (TYP.)

TYPICAL SECTION
(SPANS 2 THRU 14)

TABLE OF DIMENSIONS

SPAN	'A'	'B'	'C'	'D'	'E'	'F'	'G'	'H'
2	2'-6⅞"	3'-8⅜"	3'-8⅜"	4'-10⅛"	1'-10½"	3'-0⅛"	4'-8⅞"	5'-10½"
3	2'-6⅞"	3'-8⅜"	3'-8⅜"	4'-10⅛"	1'-10½"	3'-0⅛"	4'-8⅞"	5'-10½"
4	3'-7⅜"	3'-8½"	3'-8½"	3'-9⅝"	1'-10½"	1'-11⅝"	5'-9⅜"	5'-10½"
5	3'-8½"	3'-8½"	3'-8½"	3'-8½"	1'-10½"	1'-10½"	5'-10½"	5'-10½"
6	3'-8½"	3'-8½"	3'-8½"	3'-8½"	1'-10½"	1'-10½"	5'-10½"	5'-10½"
7	3'-8½"	3'-8½"	3'-8½"	3'-8½"	1'-10½"	1'-10½"	5'-10½"	5'-10½"
8	3'-8½"	3'-8½"	3'-8½"	3'-8½"	1'-10½"	1'-10½"	5'-10½"	5'-10½"
9	3'-5⅞"	3'-8½"	3'-8½"	3'-11⅛"	1'-10½"	2'-1⅛"	5'-7⅞"	5'-10½"
10	2'-6⅞"	3'-8⅜"	3'-8⅜"	4'-10⅛"	1'-10½"	3'-0⅛"	4'-8⅞"	5'-10½"
11	2'-6⅞"	3'-8⅜"	3'-8⅜"	4'-10⅛"	1'-10½"	3'-0⅛"	4'-8⅞"	5'-10½"
12	3'-8⅜"	4'-5⅜"	2'-11⅝"	3'-8½"	1'-1⅝"	1'-10½"	5'-10½"	6'-7⅜"
13	3'-8⅜"	4'-10"	2'-7"	3'-8⅜"	0'-9"	1'-10½"	5'-10½"	7'-0"
14	3'-8⅜"	4'-10"	2'-7"	3'-8⅜"	0'-9"	1'-10½"	5'-10½"	7'-0"

NOTES:

1. FOR TYPICAL DETAILS FOR WATER MAIN PIPE, SEE SUPERSTRUCTURE DETAILS SHEET (2 OF 9).
2. HANGER DESIGN AND SPACING WILL BE PER MANUFACTURER'S RECOMMENDATIONS BASED ON ANTICIPATED LOADING. FOLLOW THE MANUFACTURER'S DETAILS FOR PIPE HANGER ASSEMBLY.
3. FOR SCUPPER LOCATION SEE SHEETS B1-88 THRU B1-91.

BRIDGE NO. 124143

REVISIONS

DATE	BY	DESCRIPTION	DATE	BY	DESCRIPTION

Kisinger Campo & Associates Corp.
201 N. Franklin Street
Suite 400
Tampa, FL 33602
Alfredo Jose Layrisse, PE No. 75610

DRAWN BY: ARF 06-19
CHECKED BY: AJL 06-19
DESIGNED BY: CEL 06-19
CHECKED BY: AJR 06-19

LEE COUNTY PUBLIC WORKS
DEPARTMENT OF TRANSPORTATION

ROAD NO.	COUNTY	COUNTY PROJECT No
CR 865	LEE	CN160002

SHEET TITLE: TYPICAL SECTION (2 OF 2)

REF. DWG. NO.:

PROJECT NAME: ESTERO BLVD. (CR 865) OVER BIG CARLOS PASS

SHEET NO.: B1-8

NOTICE: THE OFFICIAL RECORD OF THIS SHEET IS THE ELECTRONIC FILE DIGITALLY SIGNED AND SEALED UNDER RULE 61G15-23.004, F.A.C.

THIS SHEET HAS BEEN INCLUDED IN THE PLANS FOR DOCUMENTATION. DO NOT USE FOR CONSTRUCTION PURPOSES.

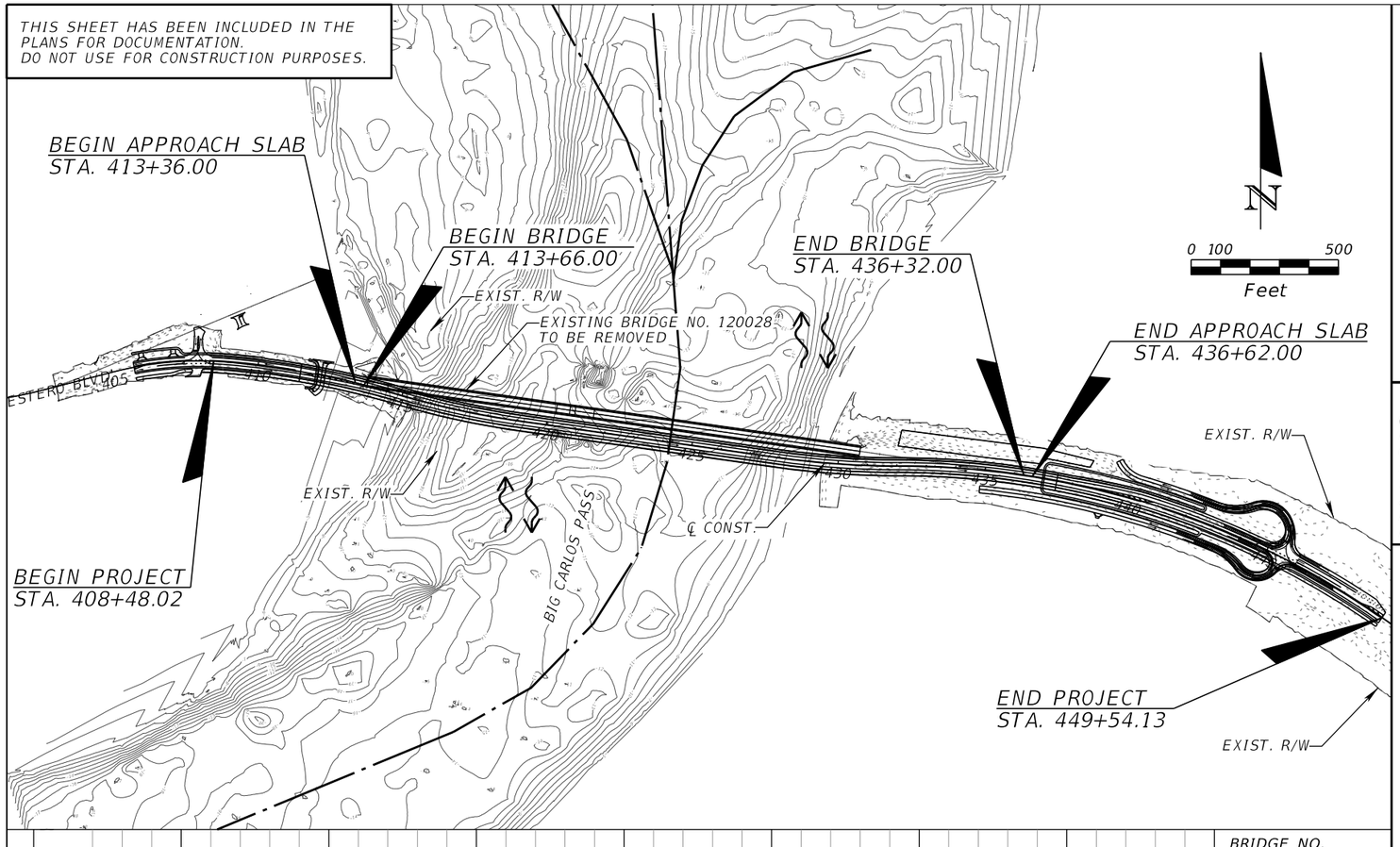

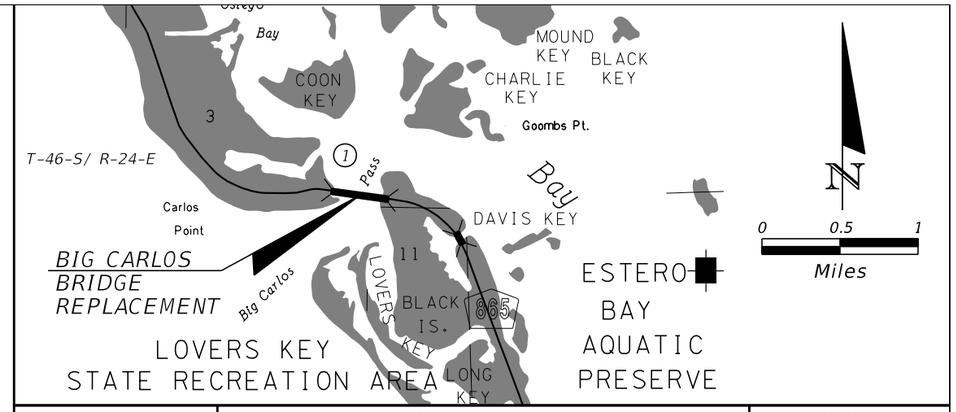

(REFERENCE)	EXISTING STRUCTURES (1)	(2)	(3)	(4)	PROPOSED STRUCTURE
FOUNDATION	Concrete				Concrete Piles
OVERALL LENGTH	1687'				2266'
SPAN LENGTH	48'-72'				161', 173'
TYPE CONSTRUCTION	Concrete				Concrete
AREA OF OPENING@D.F.	19,480 sq-ft				50,190 sq-ft
BRIDGE WIDTH	37.61'				61'-8"
ELEV. LOW MEMBER	+5.19'				+13.58'

HYDRAULIC DESIGN DATA

NOTE:
The hydraulic data is shown for informational purposes only to indicate the flood discharges and water surface elevations which may be anticipated in any given year. This data was generated using highly variable factors determined by a study of the watershed. Many judgements and assumptions are required to establish these factors. The resultant hydraulic data is sensitive to changes, particularly antecedent conditions, urbanization, channelization and land use. Users of this data are cautioned against the assumption of precision which cannot be obtained.

Design Flood: Utilized to assure a desired level of hydraulic performance.
Base Flood: Has a 1% chance of being exceeded in any given year (100 year frequency)
Overtopping Flood: Causes flow over the highway, over a watershed divide, or thru emergency relief structures.
Greatest Flood: The most severe that can be predicted where overtopping is not practicable.

WATER SURFACE ELEVATIONS: N.H.W. (Non-Tidal) NA; M.H.W. (Tidal) +0.46 ft-NAVD88
CONTROL (Non-Tidal) NA; M.L.W. (Tidal) -1.29 ft-NAVD88

FLOOD DATA:	MAX. EVENT OF RECORD	DESIGN FLOOD	BASE FLOOD	☐ OVERTOPPING or ☒ GREATEST FLOOD
STAGE ELEV. NAVD (ft)	UNKNOWN	+13.4	+14.3	+17.7
DISCHARGE (cfs)	NA	247,646	239,018	245,750
AVERAGE VELOCITY (f/s)	NA	7.6	7.3	7.0
EXCEEDANCE PROB. (%)	NA	2	1	0.2
FREQUENCY (yr.)	NA	50	100	500

SCOUR PREDICTIONS FOR PROPOSED STRUCTURE DESCRIBED ABOVE:

PIER INFORMATION NUMBERS	SIZE AND TYPE	LONG TERM SCOUR ELEV.	TOTAL SCOUR ELEVATION WORST CASE < 100 yr. FREQ. (yr.) 100	WORST CASE < 500 yr. FREQ. (yr.) 500
Pier 2	24 inch square piles	-16.0	-22.0	-22.0
Pier 3	24 inch square piles	-25.0	-25.0	-25.0
Pier 4	24 inch square piles	-25.0	-25.0	-25.0
Pier 5	24 inch square piles	-19.0	-19.0	-19.0
Pier 6	24 inch square piles	-23.0	-23.0	-23.0
Pier 7	24 inch square piles	-27.0	-27.0	-27.0
Pier 8	24 inch square piles	-29.0	-32.0	-32.0
Pier 9	24 inch square piles	-26.0	-27.0	-27.0
Pier 10	24 inch square piles	-14.0	-22.0	-22.0
Pier 11	24 inch square piles	-10.0	-24.0	-25.0
Pier 12	24 inch square piles	5.0	-22.0	-22.0
Pier 13	24 inch square piles	5.0	-16.0	-18.0
Pier 14	24 inch square piles	5.0	-14.0	-15.0

HYDRAULIC RECOMMENDATIONS

1. BEGIN BRIDGE STATION 413+66 END BRIDGE STATION 436+32 SKEW ANGLE 0
2. CLEARANCE PROVIDED: NAV: HORIZ. 100' VERT. 61.4' ABOVE EL. +0.46 DRIFT: HORIZ. - VERT. 2.58' ABOVE EL. +11.0
3. MINIMUM CLEARANCE: NAV: HORIZ. 10' VERT. 6.0' ABOVE EL. +0.46 DRIFT: HORIZ. - VERT. 2.0' ABOVE EL. +11.0
4. ABUTMENTS:

	BEGIN BRIDGE	END BRIDGE
RUBBLE GRADE:	Rubble riprap	Rubble riprap
SLOPE:	flat	flat
BURIED OR NON-BURIED HORIZ. TOE:	Non-buried	Non-buried
TOE HORIZ. DISTANCE:	9'	9'
LIMIT OF PROTECTION:	413+36	436+62

5. DECK DRAINAGE: Runoff from the western portion of the bridge will drain to the open water via scuppers. Runoff from the eastern portion of the bridge will drain down the bridge to inlets located just off of the bridge. This water will be conveyed via a closed storm sewer system to the stormwater management facility for treatment and then discharge to the bay.

REMARKS: Drift vertical elevation is the 100-yr storm surge elevation when velocity is 3.3 fps per FDOT DDG 5-203.

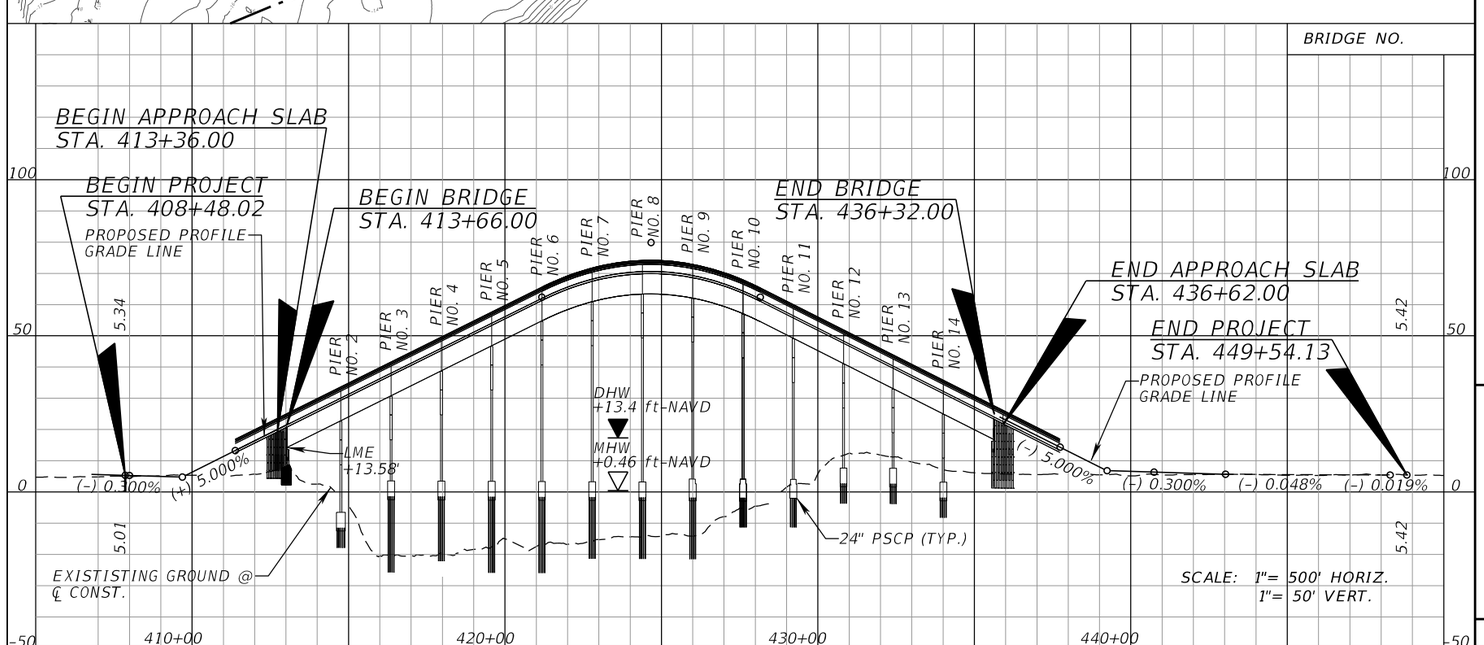

REVISIONS					
DATE	BY	DESCRIPTION	DATE	BY	DESCRIPTION

Intera Incorporated
2114 NW 40th Terrace
Suite A-1
Gainesville, FL 32605
Huseyin Demir, PH.D., P.E. No. 71494

DRAWN BY:	CHECKED BY:	DESIGNED BY:	CHECKED BY:
GAG 07-19	TAK 07-19	INTERA 06-19	INTERA 06-19

LEE COUNTY PUBLIC WORKS DEPARTMENT OF TRANSPORTATION

ROAD NO.	COUNTY	COUNTY PROJECT No
CR 865	LEE	CN160002

SHEET TITLE: BRIDGE HYDRAULIC RECOMMENDATIONS SHEET
REF. DWG. NO.:
PROJECT NAME: CR 865 (ESTERO BOULEVARD) OVER BIG CARLOS PASS
SHEET NO.: B1-9

NOTICE: THE OFFICIAL RECORD OF THIS SHEET IS THE ELECTRONIC FILE DIGITALLY SIGNED AND SEALED UNDER RULE 61G15-23.004, F.A.C.

jhanna 2/24/2022 3:12:55 PM c:\pwworkingdir\kca-pw.bentley.com_kca-pw-01\josh hanna\dms00743\BRHYRD01.dgn

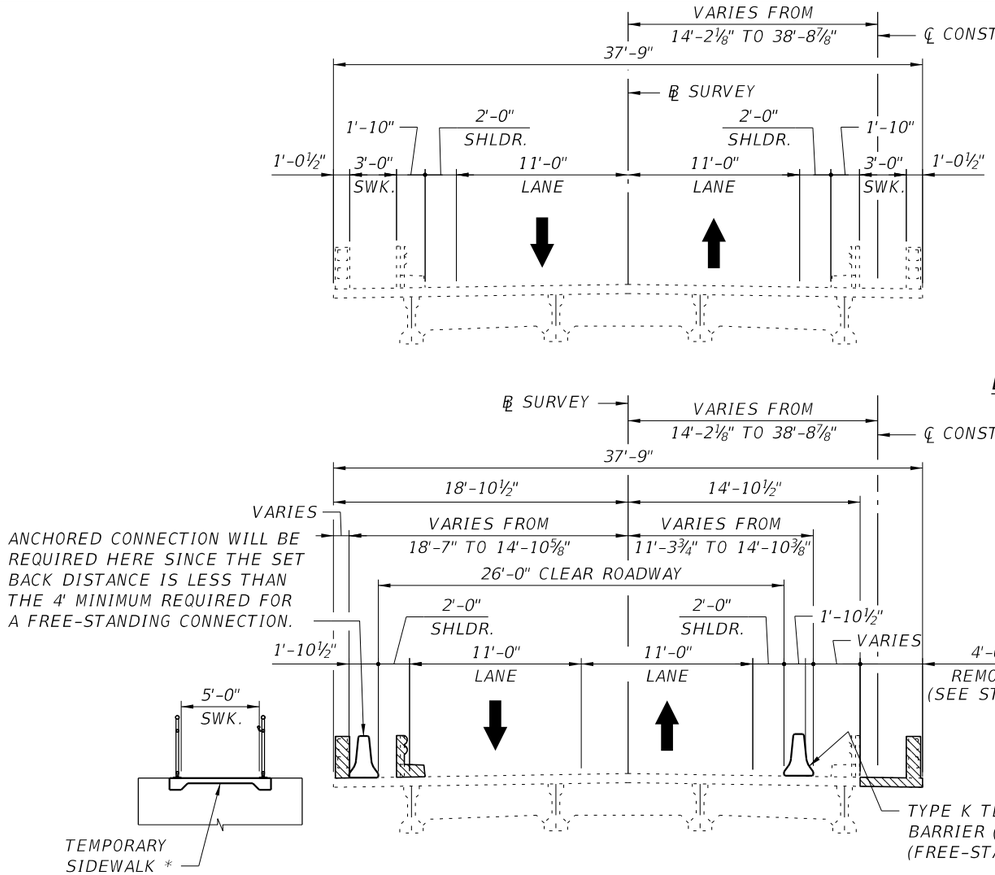

EXISTING CONDITION

PHASE I

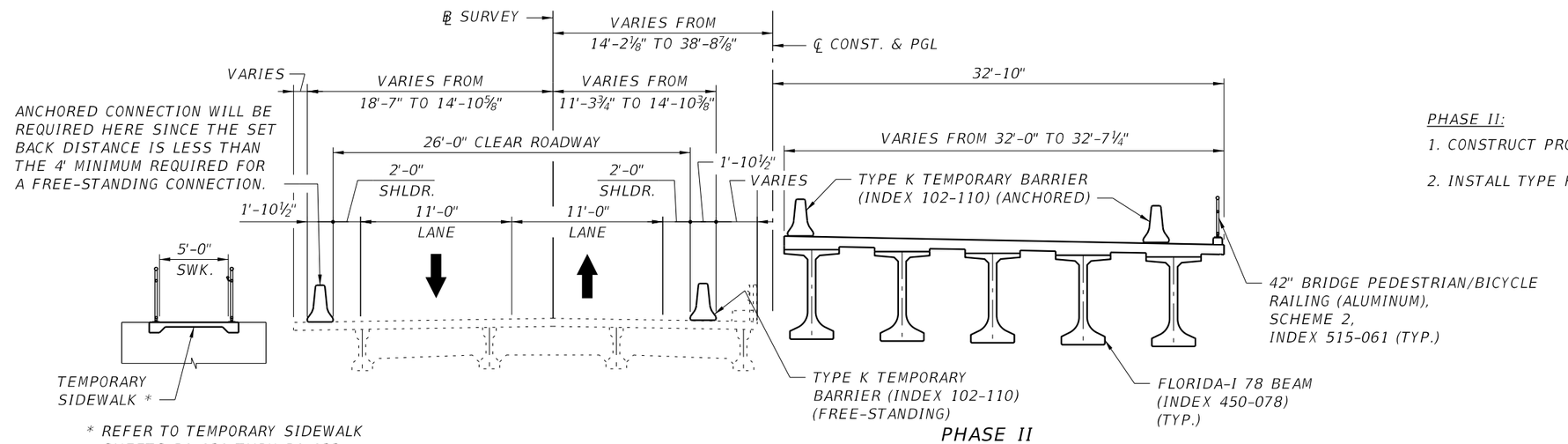

* REFER TO TEMPORARY SIDEWALK SHEETS B1-131 THRU B1-133.

PHASE II

NOTES:

1. VERTICAL OFFSET BETWEEN EXISTING BRIDGE AND PROPOSED BRIDGE NOT TO SCALE.

PHASE I:

1. CONSTRUCT TEMPORARY SIDEWALK.
2. SHIFT TRAFFIC LANES AS SHOWN.
3. REMOVE RIGHT SIDE EXISTING POST AND RAIL, VERTICAL FACE RAILING AND DECK OVERHANG TO CUTLINE LIMIT AS SHOWN. ALONG THE BRIDGE LENGTH, REMOVE ONLY THE PORTION IN CONFLICT WITH PROPOSED BRIDGE (APPROX. 25 FT). INSTALL TYPE K TEMPORARY CONCRETE BARRIER AS SHOWN. SEE TTC PLANS FOR LENGTH ALONG BRIDGE. USE OF EXISTING 3'-0" SIDEWALK TO REMAIN BEYOND REMOVAL LIMITS.
4. REMOVE LEFT SIDE EXISTING POST AND GUARDRAIL, VERTICAL FACE RAILING AND CURB. INSTALL LEFT SIDE TYPE K TEMPORARY CONCRETE BARRIER AS SHOWN. SEE TTC PLAN FOR LENGTH ALONG THE BRIDGE.

PHASE II:

1. CONSTRUCT PROPOSED DECK, BEAM, AND PEDESTRIAN RAILING.
2. INSTALL TYPE K TEMPORARY CONCRETE BARRIERS AS SHOWN.

BRIDGE NO. 124143

NOTICE: THE OFFICIAL RECORD OF THIS SHEET IS THE ELECTRONIC FILE DIGITALLY SIGNED AND SEALED UNDER RULE 61G15-23.004, F.A.C.

REVISIONS					
DATE	BY	DESCRIPTION	DATE	BY	DESCRIPTION

Kisinger Campo & Associates Corp.
201 N. Franklin Street
Suite 400
Tampa, FL 33602
Alfredo Jose Layrisse, PE No. 75610

DRAWN BY:	CHECKED BY:	DESIGNED BY:	CHECKED BY:
CEL 06-19	AJL 06-19	CEL 06-19	AJL 06-19

LEE COUNTY PUBLIC WORKS
DEPARTMENT OF TRANSPORTATION

ROAD NO.	COUNTY	COUNTY PROJECT No
CR 865	LEE	CN160002

SHEET TITLE: CONSTRUCTION SEQUENCE SPAN 1 (1 OF 3)

REF. DWG. NO.:

PROJECT NAME: ESTERO BLVD. (CR 865) OVER BIG CARLOS PASS

SHEET NO.: B1-10

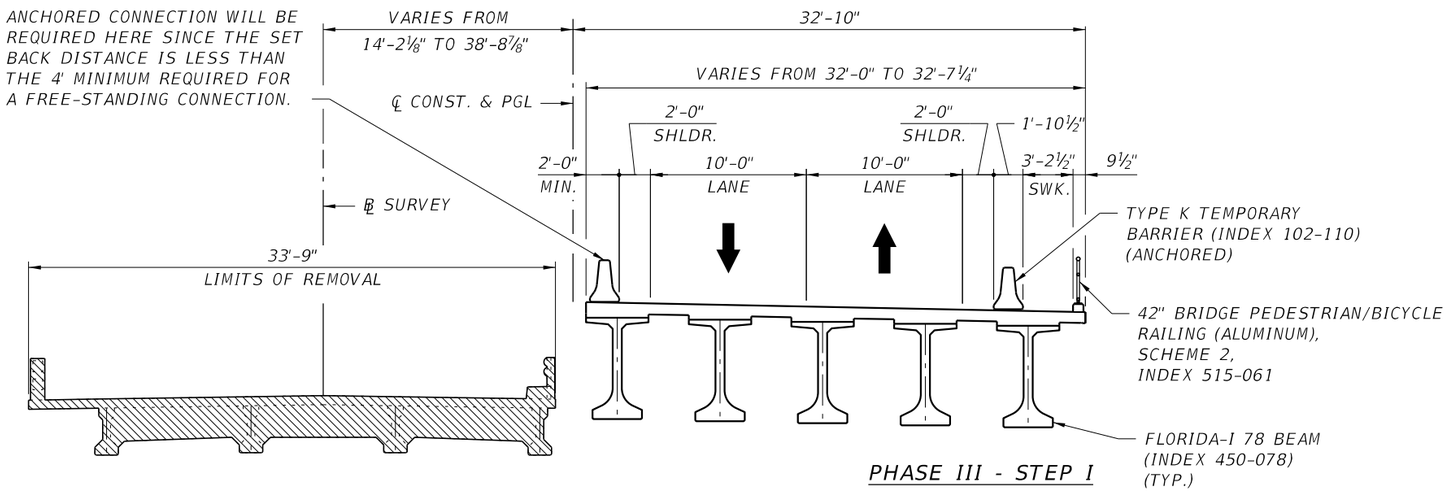

PHASE III - STEP I

PHASE III - STEP I:

1. SHIFT TRAFFIC LANES AS SHOWN.
2. REMOVE REMAINDER OF EXISTING BRIDGE AND TEMPORARY SIDEWALK.

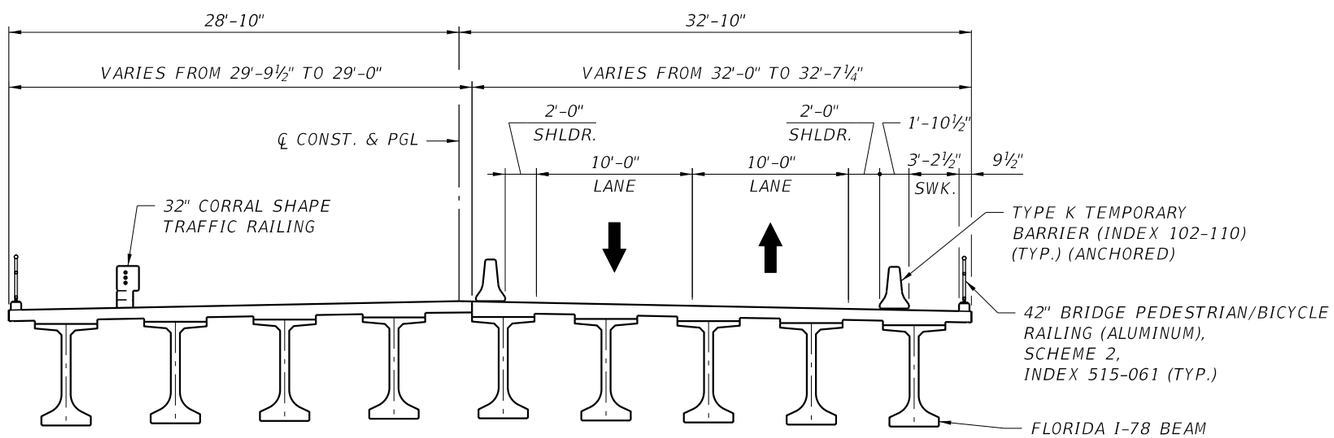

PHASE III - STEP II

PHASE III - STEP II

1. CONSTRUCT THE REST OF PROPOSED PIER, DECK, BEAM, TRAFFIC RAILING AND PEDESTRIAN RAILING.

BRIDGE NO. 124143

NOTICE: THE OFFICIAL RECORD OF THIS SHEET IS THE ELECTRONIC FILE DIGITALLY SIGNED AND SEALED UNDER RULE 61G15-23.004, F.A.C.

REVISIONS					
DATE	BY	DESCRIPTION	DATE	BY	DESCRIPTION

Kisinger Campo & Associates Corp.
201 N. Franklin Street
Suite 400
Tampa, FL 33602
Alfredo Jose Layrisse, PE No. 75610

DRAWN BY: CEL 06-19
CHECKED BY: AJL 06-19
DESIGNED BY: CEL 06-19
CHECKED BY: AJL 06-19

LEE COUNTY PUBLIC WORKS
DEPARTMENT OF TRANSPORTATION

ROAD NO.	COUNTY	COUNTY PROJECT No
CR 865	LEE	CN160002

SHEET TITLE: CONSTRUCTION SEQUENCE SPAN 1 (2 OF 3)

REF. DWG. NO.:

PROJECT NAME: ESTERO BLVD. (CR 865) OVER BIG CARLOS PASS

SHEET NO.: B1-11

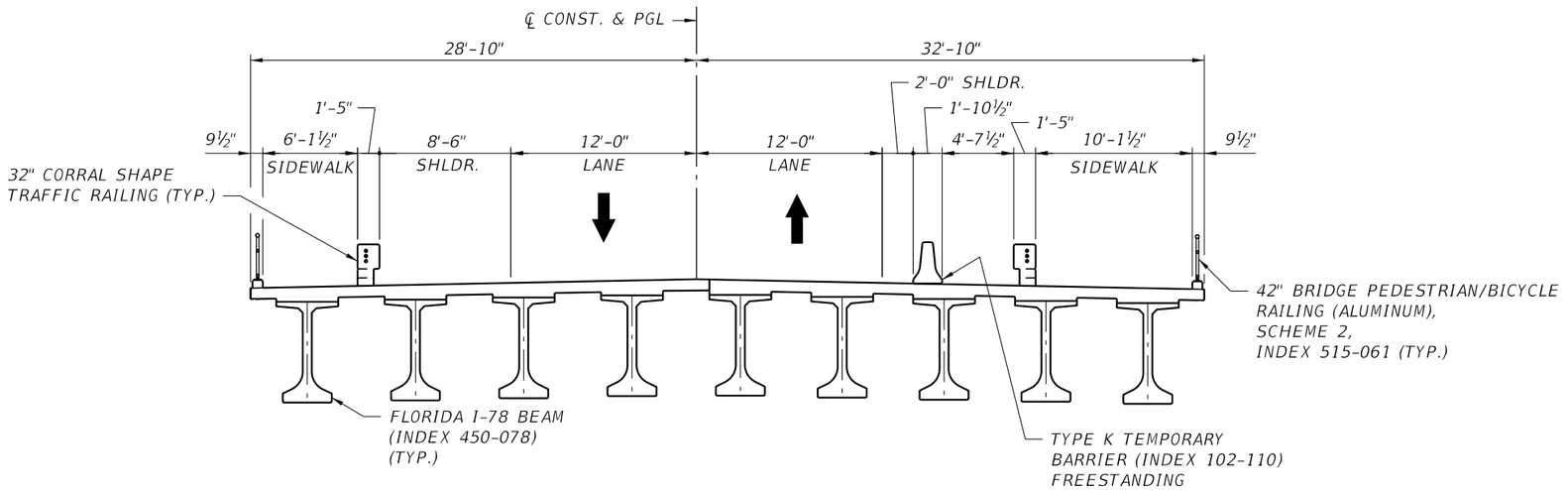

PHASE IV

PHASE IV:

1. SHIFT EASTBOUND AND WESTBOUND TRAFFIC LANE AS SHOWN.
2. CONSTRUCT PROPOSED RIGHT 32" CORRAL SHAPED TRAFFIC RAILING.

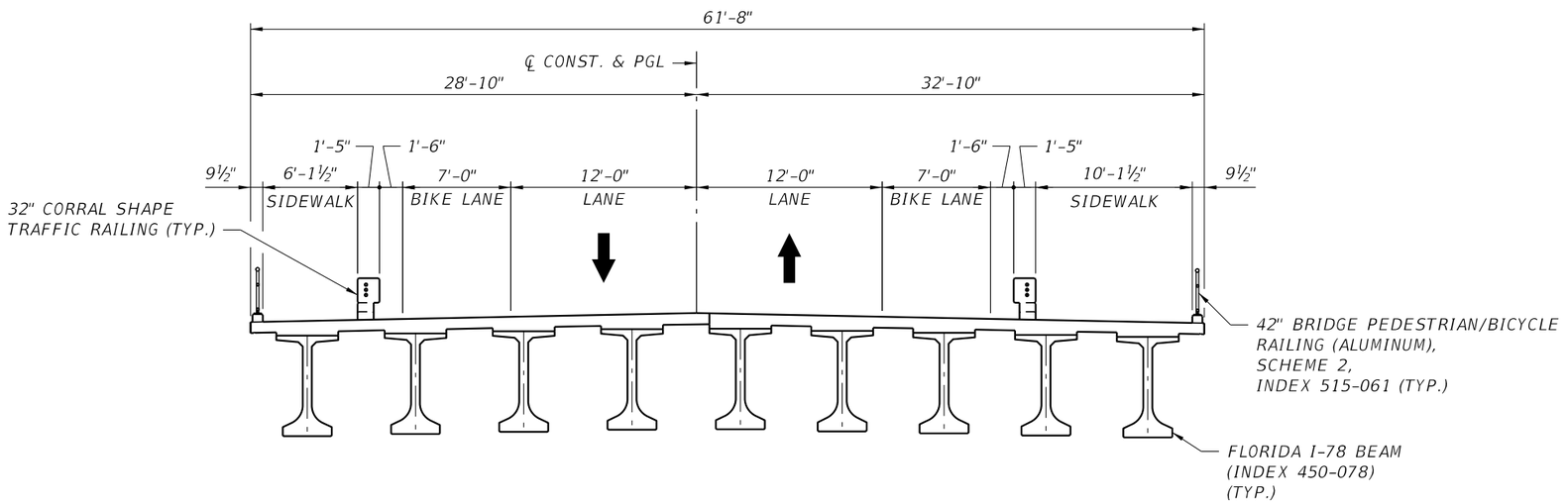

PHASE V

PHASE V:

1. REMOVE TYPE K TEMPORARY CONCRETE BARRIER AS SHOWN.
2. SHIFT TRAFFIC LANES AS SHOWN.

BRIDGE NO. 124143

NOTICE: THE OFFICIAL RECORD OF THIS SHEET IS THE ELECTRONIC FILE DIGITALLY SIGNED AND SEALED UNDER RULE 61G15-23.004, F.A.C.

REVISIONS					
DATE	BY	DESCRIPTION	DATE	BY	DESCRIPTION

Kisinger Campo & Associates Corp.
201 N. Franklin Street
Suite 400
Tampa, FL 33602
Alfredo Jose Layrisse, PE No. 75610

DRAWN BY:	CHECKED BY:	DESIGNED BY:	CHECKED BY:
CEL 06-19	AJL 06-19	CEL 06-19	AJL 06-19

LEE COUNTY PUBLIC WORKS
DEPARTMENT OF TRANSPORTATION

ROAD NO.	COUNTY	COUNTY PROJECT No
CR 865	LEE	CN160002

SHEET TITLE: CONSTRUCTION SEQUENCE SPAN 1 (3 OF 3)

REF. DWG. NO.

PROJECT NAME: ESTERO BLVD. (CR 865) OVER BIG CARLOS PASS

SHEET NO. B1-12

jhanna 2/24/2022 3:13:01 PM c:\pwworkingdir\kca-pw.bentley.com_kca-pw-01\josh hanna\dms00783\B1ConstSeq03.dgn

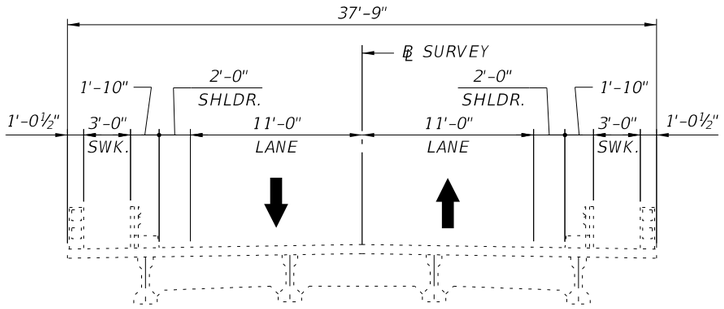

EXISTING CONDITION

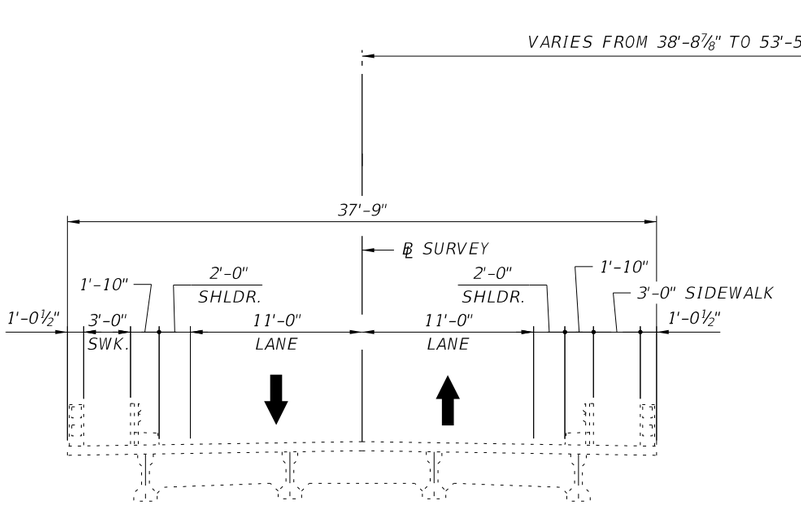

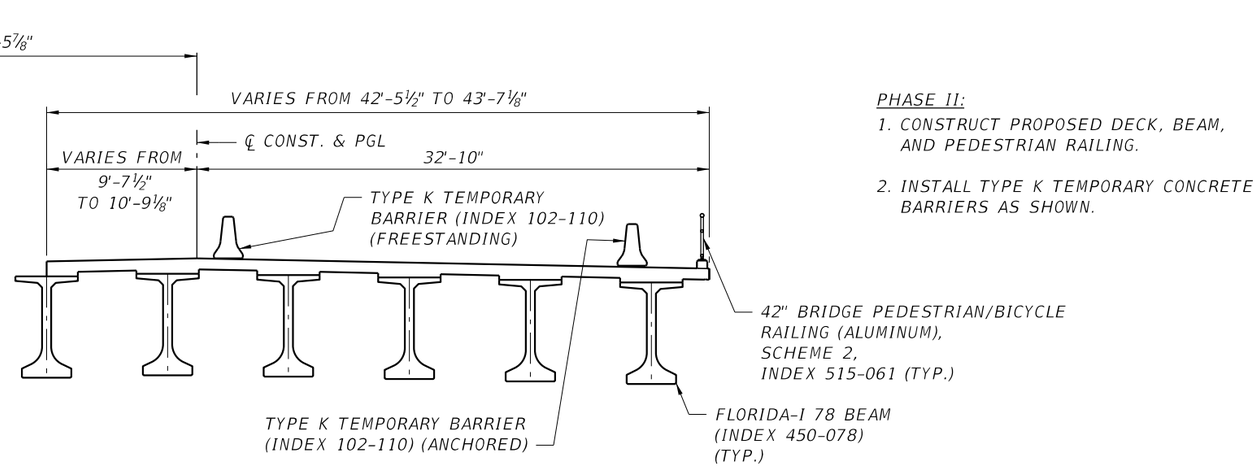

PHASE II

PHASE II:

1. CONSTRUCT PROPOSED DECK, BEAM, AND PEDESTRIAN RAILING.
2. INSTALL TYPE K TEMPORARY CONCRETE BARRIERS AS SHOWN.

BRIDGE NO. 124143

NOTICE: THE OFFICIAL RECORD OF THIS SHEET IS THE ELECTRONIC FILE DIGITALLY SIGNED AND SEALED UNDER RULE 61G15-23.004, F.A.C.

REVISIONS					
DATE	BY	DESCRIPTION	DATE	BY	DESCRIPTION

Kisinger Campo & Associates Corp.
201 N. Franklin Street
Suite 400
Tampa, FL 33602
Alfredo Jose Layrisse, PE No. 75610

DRAWN BY: CEL 06-19
CHECKED BY: AJL 06-19
DESIGNED BY: CEL 06-19
CHECKED BY: AJL 06-19

LEE COUNTY PUBLIC WORKS
DEPARTMENT OF TRANSPORTATION

ROAD NO.	COUNTY	COUNTY PROJECT No
CR 865	LEE	CN160002

SHEET TITLE: CONSTRUCTION SEQUENCE SPAN 2 (1 OF 2)

REF. DWG. NO.

PROJECT NAME: ESTERO BLVD. (CR 865) OVER BIG CARLOS PASS

SHEET NO. B1-13

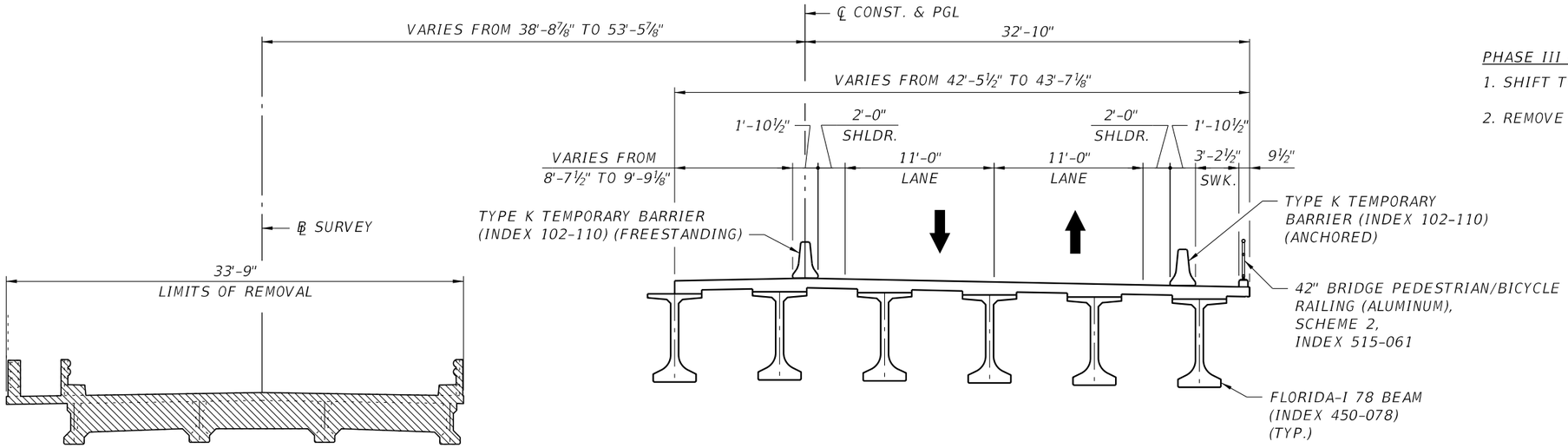

PHASE III - STEP I

PHASE III – STEP I

1. SHIFT TRAFFIC LANES AS SHOWN.
2. REMOVE REMAINDER OF EXISTING BRIDGE.

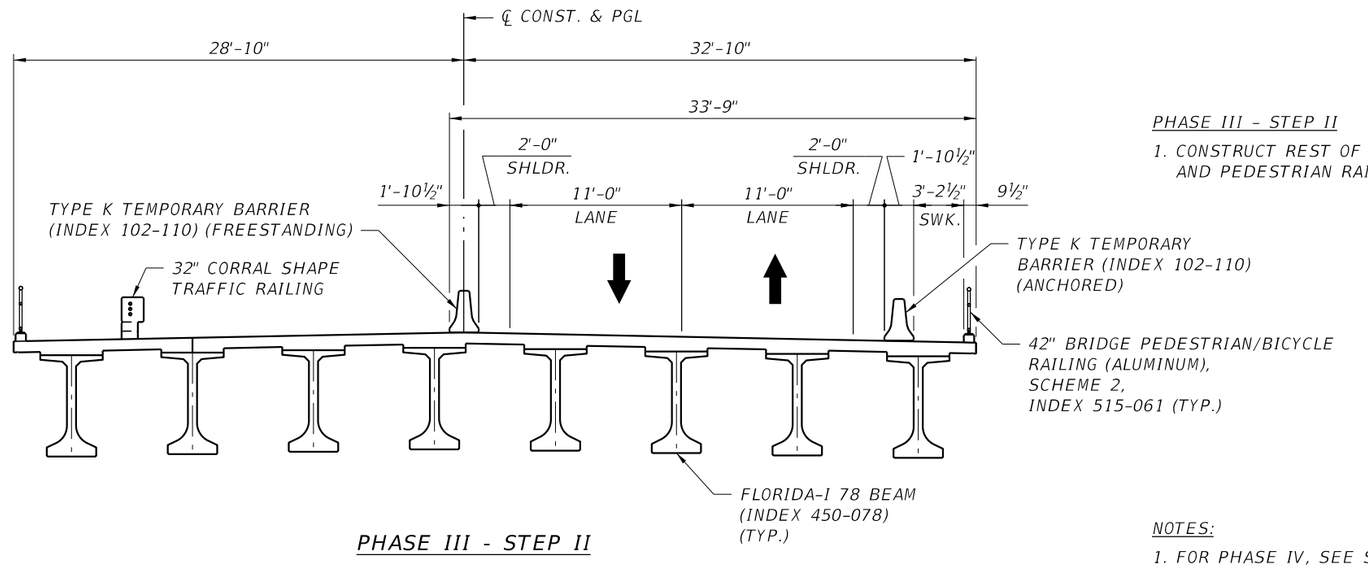

PHASE III - STEP II

PHASE III – STEP II

1. CONSTRUCT REST OF PROPOSED DECK, BEAM, TRAFFIC RAILING AND PEDESTRIAN RAILING.

NOTES:

1. FOR PHASE IV, SEE SPAN 1 CONSTRUCTION SEQUENCE – PHASE IV.
2. FOR PHASE V, SEE SPAN 1 CONSTRUCTION SEQUENCE – PHASE V.
3. VERTICAL OFFSET BETWEEN EXISTING BRIDGE AND PROPOSED BRIDGE NOT TO SCALE.

BRIDGE NO. 124143

NOTICE: THE OFFICIAL RECORD OF THIS SHEET IS THE ELECTRONIC FILE DIGITALLY SIGNED AND SEALED UNDER RULE 61G15-23.004, F.A.C.

REVISIONS					
DATE	BY	DESCRIPTION	DATE	BY	DESCRIPTION

Kisinger Campo & Associates Corp.
201 N. Franklin Street
Suite 400
Tampa, FL 33602
Alfredo Jose Layrisse, PE No. 75610

DRAWN BY: CEL 06-19	LEE COUNTY PUBLIC WORKS DEPARTMENT OF TRANSPORTATION			SHEET TITLE: CONSTRUCTION SEQUENCE SPAN 2 (2 OF 2)	REF. DWG. NO.
CHECKED BY: AJL 06-19	ROAD NO.	COUNTY	COUNTY PROJECT No	PROJECT NAME: ESTERO BLVD. (CR 865) OVER BIG CARLOS PASS	SHEET NO. B1-14
DESIGNED BY: CEL 06-19	CR 865	LEE	CN160002		
CHECKED BY: AJL 06-19					

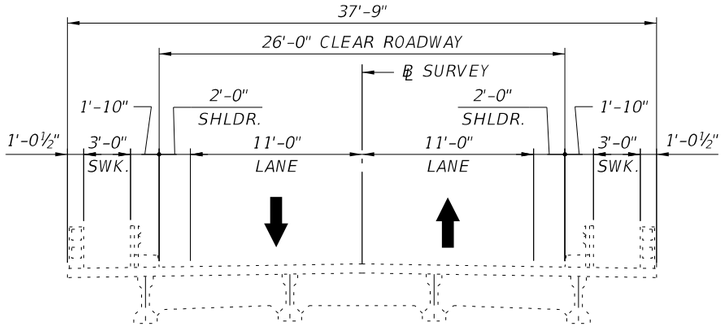

EXISTING CONDITION

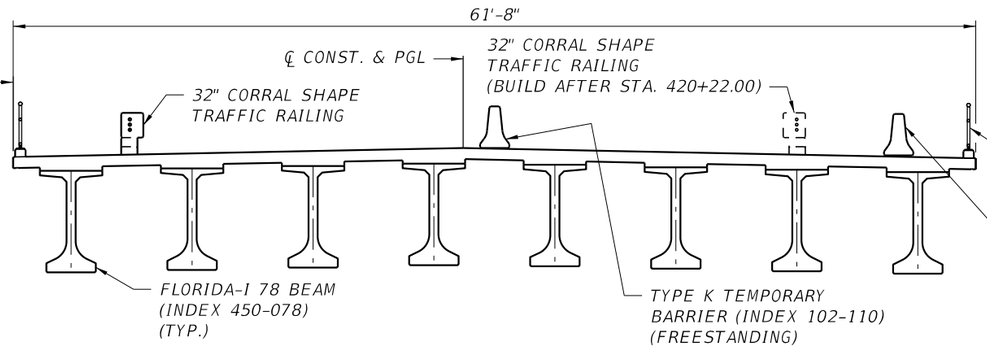

PHASE II:

1. CONSTRUCT PROPOSED BRIDGE SPAN
2. INSTALL TYPE K TEMPORARY CONCRETE BARRIER AS SHOWN. FOR TYPE K TEMPORARY BARRIER AND CORRAL SHAPE TRAFFIC RAILING PLACEMENT, SEE TRAFFIC CONTROL PLANS.

42" BRIDGE PEDESTRIAN/BICYCLE RAILING (ALUMINUM), SCHEME 2, INDEX 515-061 (TYP.)

TYPE K TEMPORARY BARRIER (INDEX 102-110) (FREESTANDING FOR SIDEWALK WIDTH GREATER THAN 6FT, ANCHORED OTHERWISE)

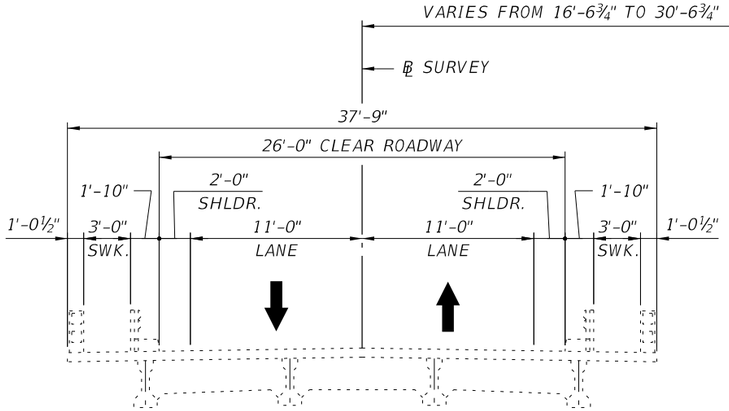

PHASE II

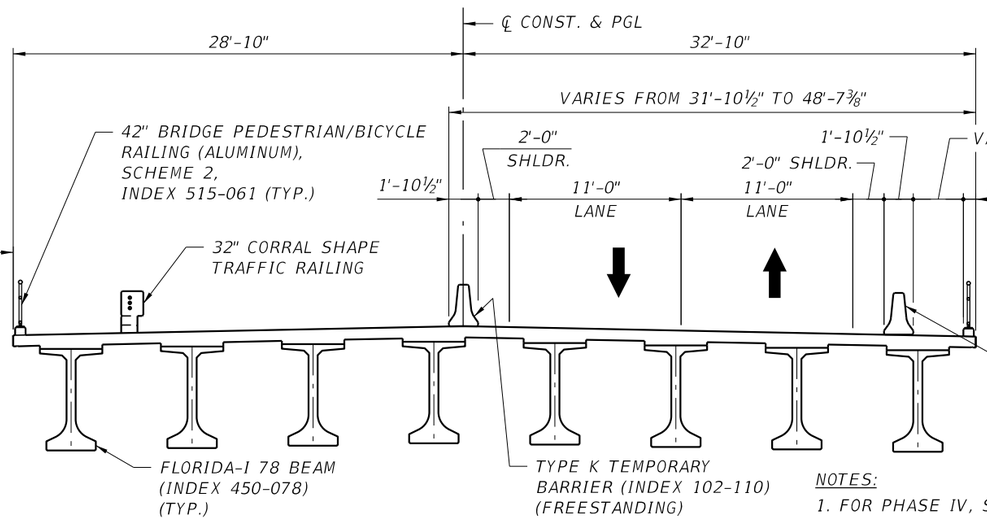

PHASE III:

1. SHIFT TRAFFIC LANES AS SHOWN.
2. REMOVE REMAINDER OF EXISTING BRIDGE.

TYPE K TEMPORARY BARRIER (INDEX 102-110) (FREESTANDING FOR SIDEWALK WIDTH GREATER THAN 6FT, ANCHORED OTHERWISE)

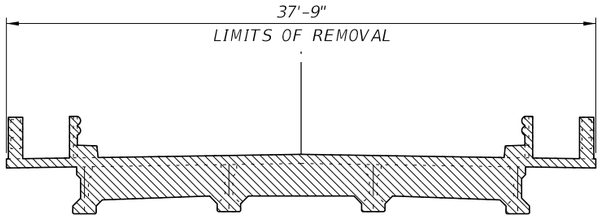

PHASE III

NOTES:

1. FOR PHASE IV, SEE SPAN 1 CONSTRUCTION SEQUENCE - PHASE IV.
2. FOR PHASE V, SEE SPAN 1 CONSTRUCTION SEQUENCE - PHASE V.
3. VERTICAL OFFSET BETWEEN EXISTING BRIDGE AND PROPOSED BRIDGE NOT TO SCALE.

BRIDGE NO. 124143

NOTICE: THE OFFICIAL RECORD OF THIS SHEET IS THE ELECTRONIC FILE DIGITALLY SIGNED AND SEALED UNDER RULE 61G15-23.004, F.A.C.

REVISIONS					
DATE	BY	DESCRIPTION	DATE	BY	DESCRIPTION

Kisinger Campo & Associates Corp.
201 N. Franklin Street
Suite 400
Tampa, FL 33602
Alfredo Jose Layrisse, PE No. 75610

DRAWN BY: CEL 06-19
CHECKED BY: AJL 06-19
DESIGNED BY: CEL 06-19
CHECKED BY: AJL 06-19

LEE COUNTY PUBLIC WORKS
DEPARTMENT OF TRANSPORTATION

ROAD NO.	COUNTY	COUNTY PROJECT No
CR 865	LEE	CN160002

SHEET TITLE: CONSTRUCTION SEQUENCE SPAN 3 THRU 14

REF. DWG. NO.

PROJECT NAME: ESTERO BLVD. (CR 865) OVER BIG CARLOS PASS

SHEET NO. B1-15

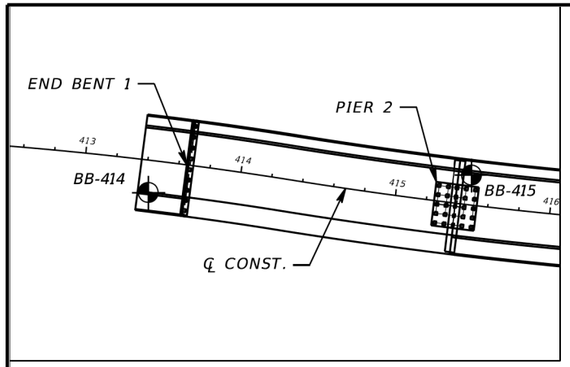

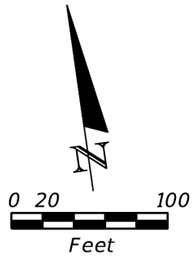

BORING LOCATION PLAN

RECOMMENDED ENVIRONMENTAL CLASSIFICATION:

SUBSTRUCTURE	CONCRETE: EXTREMELY AGGRESSIVE
SUBSTRUCTURE	STEEL: EXTREMELY AGGRESSIVE
SUPERSTRUCTURE	EXTREMELY AGGRESSIVE

NOTE: BORING LOCATIONS AND ELEVATIONS DENOTED WITH AN ASTERISK "*" WERE PROVIDED BY THE PROJECT SURVEYOR. BORING LOCATIONS AND ELEVATIONS NOT DENOTED WITH AN ASTERISK "*" WERE DETERMINED USING PROJECT DESIGN FILES PROVIDED BY KISINGER CAMPO AND ASSOCIATES, CORP. IN CONJUNCTION WITH GPS COORDINATES OBTAINED BY TIERRA, INC. IN THE FIELD AND SHOULD BE CONSIDERED APPROXIMATE.

BOR # BB-414
STA. 413+40
REF. ℄ CONST.
OFF. 21' RT.
ELEV. 6.2
DATE 7/21/2019
DRILLER I. POORAN
HAMMER AUTOMATIC
RIG D-25

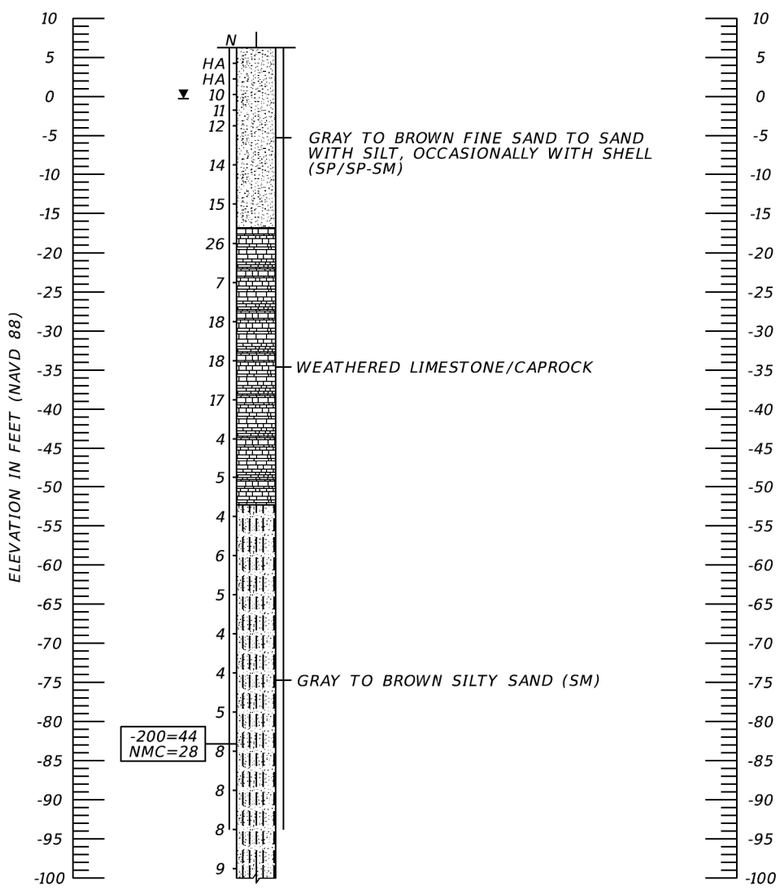

BB-414 (CONTINUED)

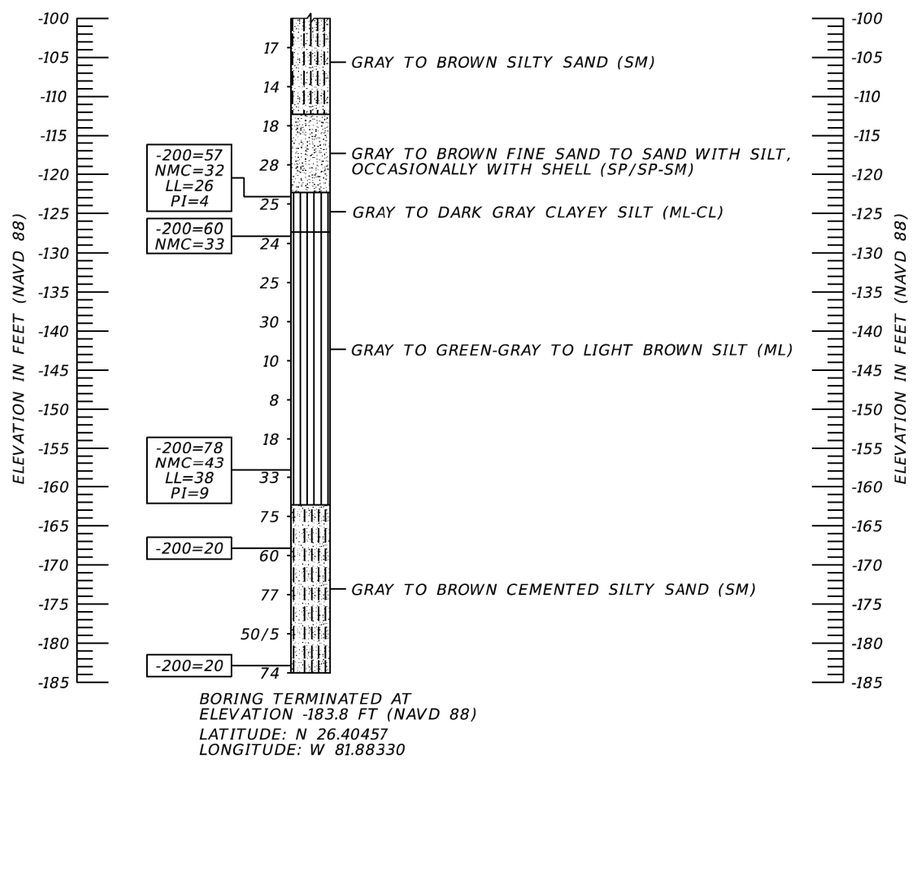

BORING TERMINATED AT ELEVATION -183.8 FT (NAVD 88)
LATITUDE: N 26.40457
LONGITUDE: W 81.88330

LEGEND

- GRAY TO BROWN FINE SAND TO SAND WITH SILT, OCCASIONALLY WITH SHELL (SP/SP-SM)
- GRAY TO BROWN SILTY SAND, OCCASIONALLY CEMENTED (SM)
- WEATHERED LIMESTONE/CAPROCK
- GRAY TO GREEN-GRAY TO LIGHT BROWN SILT TO CLAYEY-SILT (ML/MH/ML-CL)
- GRAY TO BROWN SHELLY SAND (SP/SP-SM)
- GRAY TO DARK GRAY INDURATED CLAY (CL/CH)
- GRAY TO DARK GRAY CLAY (CL/CH)
- DARK BROWN ORGANIC SILTY SAND TO PEAT (Pt)
- GRAY TO LIGHT BROWN CLAYEY-SILTY SAND TO CLAYEY SAND (SM-SC/SC)

W	WATER LEVEL AT TIME OF FIELD ACTIVITIES
SP	UNIFIED SOIL CLASSIFICATION SYSTEM (ASTM D 2487) GROUP SYMBOL AS DETERMINED BY VISUAL REVIEW AND LABORATORY TESTING ON SELECTED SAMPLES FOR CONFIRMATION OF VISUAL REVIEW.
N	NUMBERS TO THE LEFT OF BORINGS INDICATE SPT VALUE FOR 12 INCHES OF PENETRATION (UNLESS OTHERWISE NOTED).
50/4	NUMBER OF BLOWS FOR 4 INCHES OF PENETRATION
HA	HAND AUGERED TO VERIFY UTILITY CLEARANCE
WH	SPLIT-SPOON SAMPLER ADVANCED UNDER WEIGHT OF ROD AND HAMMER
WR	SPLIT-SPOON SAMPLER ADVANCED UNDER WEIGHT OF ROD
-200	PERCENT PASSING #200 SIEVE
NMC	NATURAL MOISTURE CONTENT (%)
LL	LIQUID LIMIT (%)
PI	PLASTICITY INDEX (%)
NP	NON-PLASTIC
NAVD 88	NORTH AMERICAN VERTICAL DATUM OF 1988
	APPROXIMATE SPT BORING LOCATION
	GROUNDWATER LEVEL ENCOUNTERED DURING FIELD EXPLORATIONS
100	LOSS OF CIRCULATION OF DRILLING FLUID (%)
	CASING

℄ CONST. CENTERLINE CONSTRUCTION OF ESTERO BLVD. (CR 865)

	SAFETY HAMMER	AUTOMATIC HAMMER
GRANULAR MATERIALS- RELATIVE DENSITY	SPT N-VALUE (BLOWS/FT.)	SPT N-VALUE (BLOWS/FT.)
VERY LOOSE	LESS THAN 4	LESS THAN 3
LOOSE	4 to 10	3 to 8
MEDIUM DENSE	10 to 30	8 to 24
DENSE	30 to 50	24 to 40
VERY DENSE	GREATER THAN 50	GREATER THAN 40
SILTS AND CLAYS CONSISTENCY	SPT N-VALUE (BLOWS/FT.)	SPT N-VALUE (BLOWS/FT.)
VERY SOFT	LESS THAN 2	LESS THAN 1
SOFT	2 to 4	1 to 3
FIRM	4 to 8	3 to 6
STIFF	8 to 15	6 to 12
VERY STIFF	15 to 30	12 to 24
HARD	GREATER THAN 30	GREATER THAN 24

BRIDGE NO. 124143

NOTICE: THE OFFICIAL RECORD OF THIS SHEET IS THE ELECTRONIC FILE DIGITALLY SIGNED AND SEALED UNDER RULE 61G15-23.004, F.A.C.

REVISIONS

DATE	BY	DESCRIPTION	DATE	BY	DESCRIPTION

ERICK M. FREDERICK, P.E.
P.E. LICENSE NUMBER 63920
TIERRA, INC.
7351 TEMPLE TERRACE HIGHWAY
TAMPA, FLORIDA 33637

DRAWN BY: BJS
CHECKED BY: TM
DESIGNED BY: BJS
CHECKED BY: EMF

LEE COUNTY PUBLIC WORKS
DEPARTMENT OF TRANSPORTATION

ROAD NO.	COUNTY	COUNTY PROJECT No
CR 865	LEE	CN160002

SHEET TITLE: REPORT OF CORE BORINGS (1 OF 14)
REF. DWG. NO.
PROJECT NAME: ESTERO BLVD. (CR 865) OVER BIG CARLOS PASS
SHEET NO. B1-16

jhanna 2/24/2022 3:13:08 PM c:\pwworkingdir\kca-pw.bentley.com_kca-pw-01\josh hanna\dms00783\B1Boring01.dgn

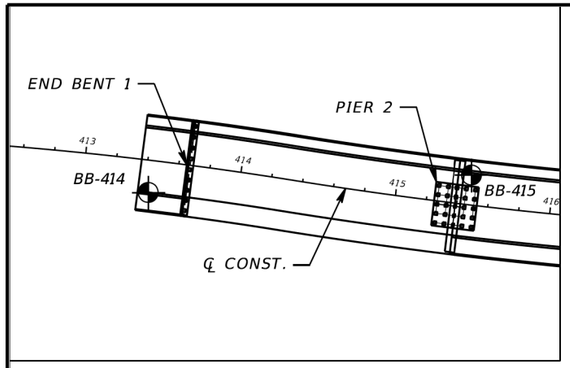

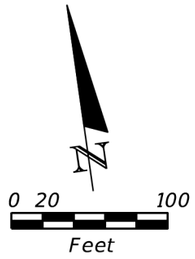

BORING LOCATION PLAN

BOR # BB-415
STA. 415+47
REF. ℄ CONST.
OFF. 19' LT.
ELEV. -7.0 (MUDLINE)
DATE 6/1/2020
DRILLER D. MCKENZIE
HAMMER AUTOMATIC
RIG CME 55

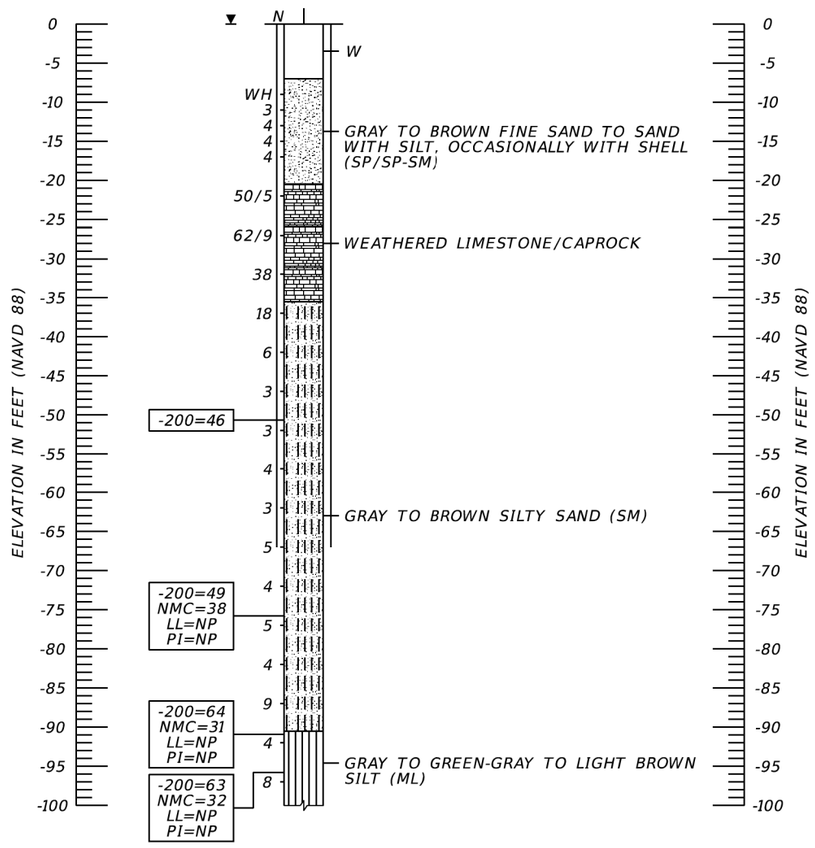

BB-415 CONTINUED

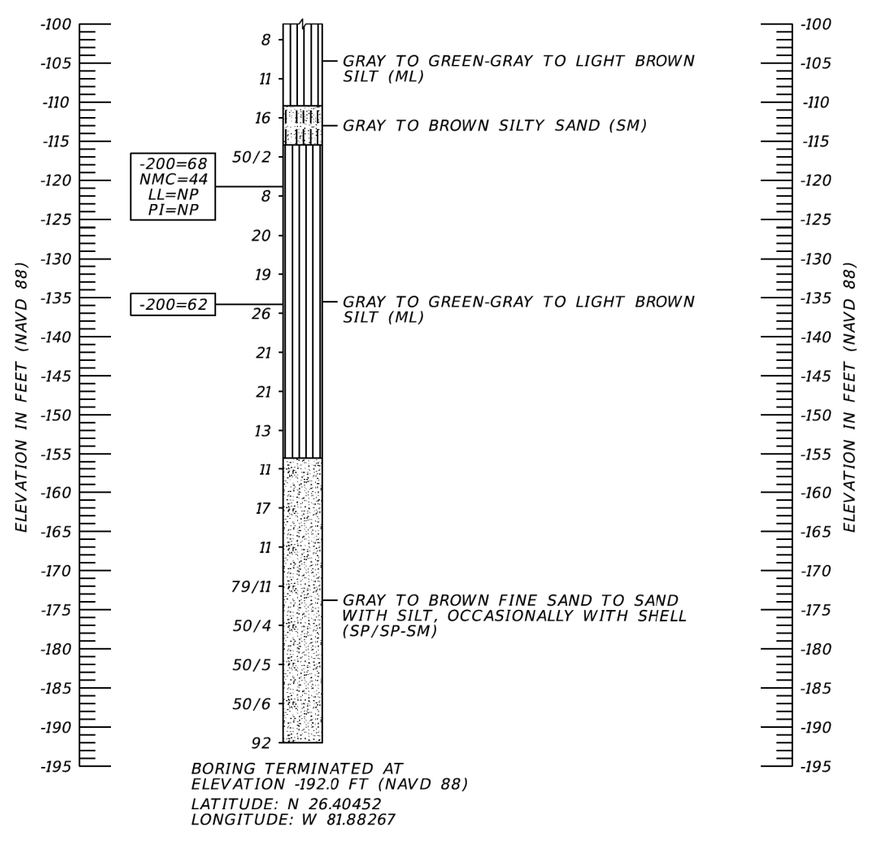

BORING TERMINATED AT ELEVATION -192.0 FT (NAVD 88)
LATITUDE: N 26.40452
LONGITUDE: W 81.88267

RECOMMENDED ENVIRONMENTAL CLASSIFICATION:

SUBSTRUCTURE	CONCRETE: EXTREMELY AGGRESSIVE
SUBSTRUCTURE	STEEL: EXTREMELY AGGRESSIVE
SUPERSTRUCTURE	EXTREMELY AGGRESSIVE

NOTE: BORING LOCATIONS AND ELEVATIONS DENOTED WITH AN ASTERISK "*" WERE PROVIDED BY THE PROJECT SURVEYOR. BORING LOCATIONS AND ELEVATIONS NOT DENOTED WITH AN ASTERISK "*" WERE DETERMINED USING PROJECT DESIGN FILES PROVIDED BY KISINGER CAMPO AND ASSOCIATES, CORP. IN CONJUNCTION WITH GPS COORDINATES OBTAINED BY TIERRA, INC. IN THE FIELD AND SHOULD BE CONSIDERED APPROXIMATE.

LEGEND

- GRAY TO BROWN FINE SAND TO SAND WITH SILT, OCCASIONALLY WITH SHELL (SP/SP-SM)
- GRAY TO BROWN SILTY SAND, OCCASIONALLY CEMENTED (SM)
- WEATHERED LIMESTONE/CAPROCK
- GRAY TO GREEN-GRAY TO LIGHT BROWN SILT TO CLAYEY-SILT (ML/MH/ML-CL)
- GRAY TO BROWN SHELLY SAND (SP/SP-SM)
- GRAY TO DARK GRAY INDURATED CLAY (CL/CH)
- GRAY TO DARK GRAY CLAY (CL/CH)
- DARK BROWN ORGANIC SILTY SAND TO PEAT (Pt)
- GRAY TO LIGHT BROWN CLAYEY-SILTY SAND TO CLAYEY SAND (SM-SC/SC)

W	WATER LEVEL AT TIME OF FIELD ACTIVITIES
SP	UNIFIED SOIL CLASSIFICATION SYSTEM (ASTM D 2487) GROUP SYMBOL AS DETERMINED BY VISUAL REVIEW AND LABORATORY TESTING ON SELECTED SAMPLES FOR CONFIRMATION OF VISUAL REVIEW.
N	NUMBERS TO THE LEFT OF BORINGS INDICATE SPT VALUE FOR 12 INCHES OF PENETRATION (UNLESS OTHERWISE NOTED).
50/4	NUMBER OF BLOWS FOR 4 INCHES OF PENETRATION
HA	HAND AUGERED TO VERIFY UTILITY CLEARANCE
WH	SPLIT-SPOON SAMPLER ADVANCED UNDER WEIGHT OF ROD AND HAMMER
WR	SPLIT-SPOON SAMPLER ADVANCED UNDER WEIGHT OF ROD
-200	PERCENT PASSING #200 SIEVE
NMC	NATURAL MOISTURE CONTENT (%)
LL	LIQUID LIMIT (%)
PI	PLASTICITY INDEX (%)
NP	NON-PLASTIC
NAVD 88	NORTH AMERICAN VERTICAL DATUM OF 1988
	APPROXIMATE SPT BORING LOCATION
	GROUNDWATER LEVEL ENCOUNTERED DURING FIELD EXPLORATIONS
100	LOSS OF CIRCULATION OF DRILLING FLUID (%)
	CASING

℄ CONST. CENTERLINE CONSTRUCTION OF ESTERO BLVD. (CR 865)

	SAFETY HAMMER	AUTOMATIC HAMMER
GRANULAR MATERIALS- RELATIVE DENSITY	SPT N-VALUE (BLOWS/FT.)	SPT N-VALUE (BLOWS/FT.)
VERY LOOSE	LESS THAN 4	LESS THAN 3
LOOSE	4 to 10	3 to 8
MEDIUM DENSE	10 to 30	8 to 24
DENSE	30 to 50	24 to 40
VERY DENSE	GREATER THAN 50	GREATER THAN 40
SILTS AND CLAYS CONSISTENCY	SPT N-VALUE (BLOWS/FT.)	SPT N-VALUE (BLOWS/FT.)
VERY SOFT	LESS THAN 2	LESS THAN 1
SOFT	2 to 4	1 to 3
FIRM	4 to 8	3 to 6
STIFF	8 to 15	6 to 12
VERY STIFF	15 to 30	12 to 24
HARD	GREATER THAN 30	GREATER THAN 24

BRIDGE NO. 124143

NOTICE: THE OFFICIAL RECORD OF THIS SHEET IS THE ELECTRONIC FILE DIGITALLY SIGNED AND SEALED UNDER RULE 61G15-23.004, F.A.C.

REVISIONS

DATE	BY	DESCRIPTION	DATE	BY	DESCRIPTION

ERICK M. FREDERICK, P.E.
P.E. LICENSE NUMBER 63920
TIERRA, INC.
7351 TEMPLE TERRACE HIGHWAY
TAMPA, FLORIDA 33637

DRAWN BY:	BJS
CHECKED BY:	TM
DESIGNED BY:	BJS
CHECKED BY:	EMF

LEE COUNTY PUBLIC WORKS
DEPARTMENT OF TRANSPORTATION

ROAD NO.	COUNTY	COUNTY PROJECT No
CR 865	LEE	CN160002

SHEET TITLE: REPORT OF CORE BORINGS (2 OF 14)
REF. DWG. NO.:
PROJECT NAME: ESTERO BLVD. (CR 865) OVER BIG CARLOS PASS
SHEET NO.: B1-17

jhanna 2/24/2022 3:13:21 PM c:\pwworkingdir\kca-pw.bentley.com_kca-pw-01\josh hanna\dms00783\B1Boring02.dgn

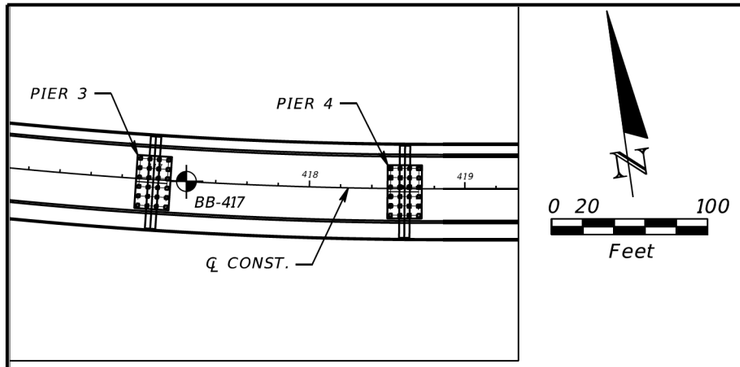

BORING LOCATION PLAN

RECOMMENDED ENVIRONMENTAL CLASSIFICATION:

SUBSTRUCTURE	CONCRETE: EXTREMELY AGGRESSIVE
SUBSTRUCTURE	STEEL: EXTREMELY AGGRESSIVE
SUPERSTRUCTURE	EXTREMELY AGGRESSIVE

NOTE: BORING LOCATIONS AND ELEVATIONS DENOTED WITH AN ASTERISK "*" WERE PROVIDED BY THE PROJECT SURVEYOR. BORING LOCATIONS AND ELEVATIONS NOT DENOTED WITH AN ASTERISK "*" WERE DETERMINED USING PROJECT DESIGN FILES PROVIDED BY KISINGER CAMPO AND ASSOCIATES, CORP. IN CONJUNCTION WITH GPS COORDINATES OBTAINED BY TIERRA, INC. IN THE FIELD AND SHOULD BE CONSIDERED APPROXIMATE.

BOR # BB-417
STA. 417+21
REF. ℄ CONST.
OFF. CENTERLINE
ELEV. -19.0 (MUDLINE)
DATE 6/10/2020
DRILLER D. MCKENZIE
HAMMER AUTOMATIC
RIG CME 55

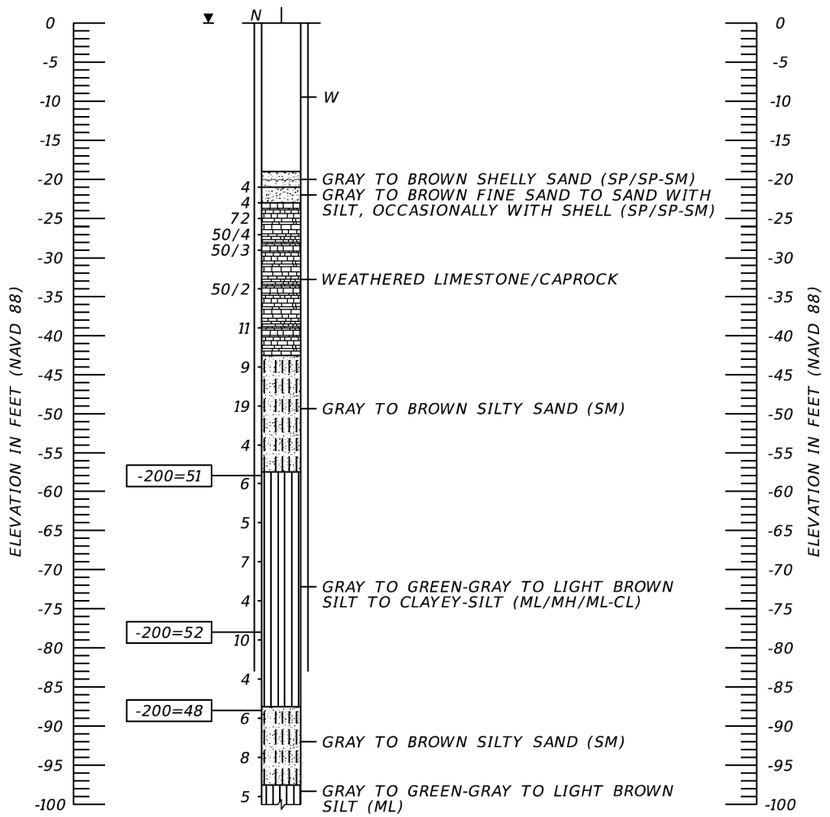

BB-417 CONTINUED

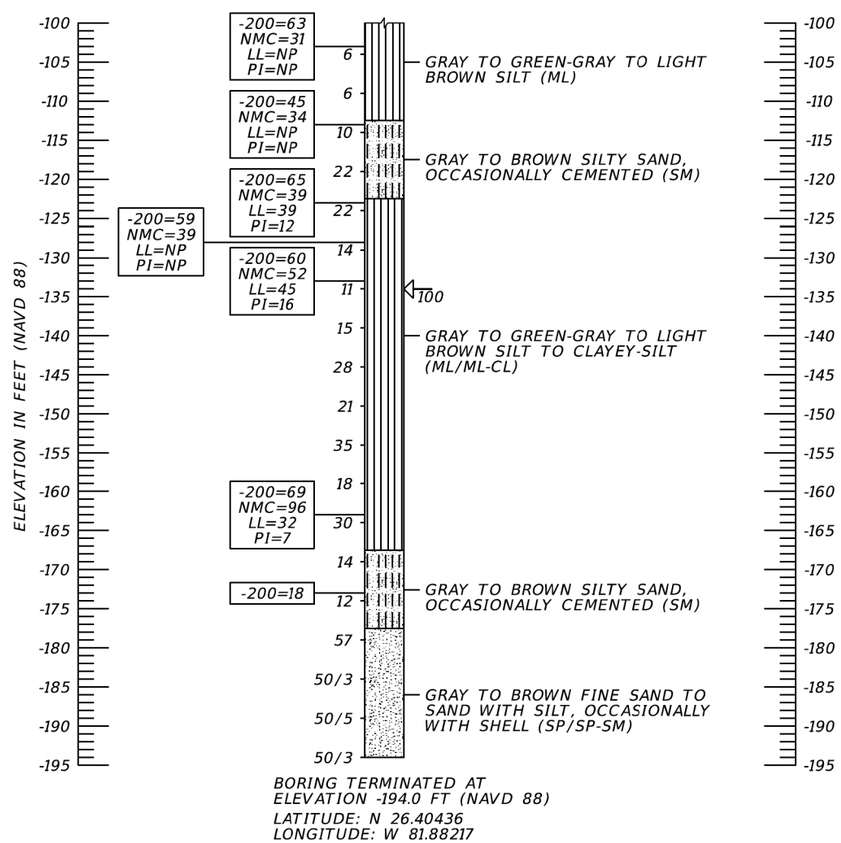

BORING TERMINATED AT
ELEVATION -194.0 FT (NAVD 88)
LATITUDE: N 26.40436
LONGITUDE: W 81.88217

LEGEND

- GRAY TO BROWN FINE SAND TO SAND WITH SILT, OCCASIONALLY WITH SHELL (SP/SP-SM)
- GRAY TO BROWN SILTY SAND, OCCASIONALLY CEMENTED (SM)
- WEATHERED LIMESTONE/CAPROCK
- GRAY TO GREEN-GRAY TO LIGHT BROWN SILT TO CLAYEY-SILT (ML/MH/ML-CL)
- GRAY TO BROWN SHELLY SAND (SP/SP-SM)
- GRAY TO DARK GRAY INDURATED CLAY (CL/CH)
- GRAY TO DARK GRAY CLAY (CL/CH)
- DARK BROWN ORGANIC SILTY SAND TO PEAT (Pt)
- GRAY TO LIGHT BROWN CLAYEY-SILTY SAND TO CLAYEY SAND (SM-SC/SC)

W	WATER LEVEL AT TIME OF FIELD ACTIVITIES
SP	UNIFIED SOIL CLASSIFICATION SYSTEM (ASTM D 2487) GROUP SYMBOL AS DETERMINED BY VISUAL REVIEW AND LABORATORY TESTING ON SELECTED SAMPLES FOR CONFIRMATION OF VISUAL REVIEW.
N	NUMBERS TO THE LEFT OF BORINGS INDICATE SPT VALUE FOR 12 INCHES OF PENETRATION (UNLESS OTHERWISE NOTED).
50/4	NUMBER OF BLOWS FOR 4 INCHES OF PENETRATION
HA	HAND AUGERED TO VERIFY UTILITY CLEARANCE
WH	SPLIT-SPOON SAMPLER ADVANCED UNDER WEIGHT OF ROD AND HAMMER
WR	SPLIT-SPOON SAMPLER ADVANCED UNDER WEIGHT OF ROD
-200	PERCENT PASSING #200 SIEVE
NMC	NATURAL MOISTURE CONTENT (%)
LL	LIQUID LIMIT (%)
PI	PLASTICITY INDEX (%)
NP	NON-PLASTIC
NAVD 88	NORTH AMERICAN VERTICAL DATUM OF 1988
	APPROXIMATE SPT BORING LOCATION
	GROUNDWATER LEVEL ENCOUNTERED DURING FIELD EXPLORATIONS
100	LOSS OF CIRCULATION OF DRILLING FLUID (%)
	CASING

℄ CONST. CENTERLINE CONSTRUCTION OF ESTERO BLVD. (CR 865)

	SAFETY HAMMER	AUTOMATIC HAMMER
GRANULAR MATERIALS- RELATIVE DENSITY	SPT N-VALUE (BLOWS/FT.)	SPT N-VALUE (BLOWS/FT.)
VERY LOOSE	LESS THAN 4	LESS THAN 3
LOOSE	4 to 10	3 to 8
MEDIUM DENSE	10 to 30	8 to 24
DENSE	30 to 50	24 to 40
VERY DENSE	GREATER THAN 50	GREATER THAN 40
SILTS AND CLAYS CONSISTENCY	SPT N-VALUE (BLOWS/FT.)	SPT N-VALUE (BLOWS/FT.)
VERY SOFT	LESS THAN 2	LESS THAN 1
SOFT	2 to 4	1 to 3
FIRM	4 to 8	3 to 6
STIFF	8 to 15	6 to 12
VERY STIFF	15 to 30	12 to 24
HARD	GREATER THAN 30	GREATER THAN 24

BRIDGE NO. 124143

NOTICE: THE OFFICIAL RECORD OF THIS SHEET IS THE ELECTRONIC FILE DIGITALLY SIGNED AND SEALED UNDER RULE 61G15-23.004, F.A.C.

REVISIONS

DATE	BY	DESCRIPTION	DATE	BY	DESCRIPTION

ERICK M. FREDERICK, P.E.
P.E. LICENSE NUMBER 63920
TIERRA, INC.
7351 TEMPLE TERRACE HIGHWAY
TAMPA, FLORIDA 33637

DRAWN BY: BJS
CHECKED BY: TM
DESIGNED BY: BJS
CHECKED BY: EMF

LEE COUNTY PUBLIC WORKS
DEPARTMENT OF TRANSPORTATION

ROAD NO.	COUNTY	COUNTY PROJECT No
CR 865	LEE	CN160002

SHEET TITLE: REPORT OF CORE BORINGS (3 OF 14)
REF. DWG. NO.
PROJECT NAME: ESTERO BLVD. (CR 865) OVER BIG CARLOS PASS
SHEET NO. B1-18

jhanna 2/24/2022 3:13:33 PM c:\pwworkingdir\kca-pw.bentley.com_kca-pw-01\josh hanna\dms00783\B1Boring03.dgn

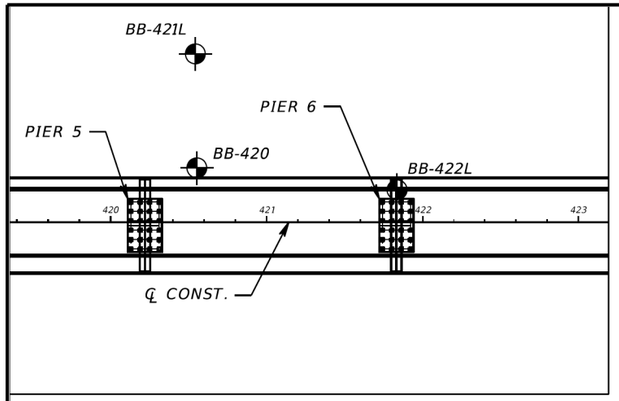

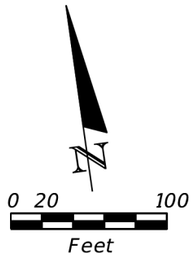

BORING LOCATION PLAN

RECOMMENDED ENVIRONMENTAL CLASSIFICATION:

SUBSTRUCTURE	CONCRETE: EXTREMELY AGGRESSIVE
SUBSTRUCTURE	STEEL: EXTREMELY AGGRESSIVE
SUPERSTRUCTURE	EXTREMELY AGGRESSIVE

NOTE: BORING LOCATIONS AND ELEVATIONS DENOTED WITH AN ASTERISK "*" WERE PROVIDED BY THE PROJECT SURVEYOR. BORING LOCATIONS AND ELEVATIONS NOT DENOTED WITH AN ASTERISK "*" WERE DETERMINED USING PROJECT DESIGN FILES PROVIDED BY KISINGER CAMPO AND ASSOCIATES, CORP. IN CONJUNCTION WITH GPS COORDINATES OBTAINED BY TIERRA, INC. IN THE FIELD AND SHOULD BE CONSIDERED APPROXIMATE.

BOR # BB-420
STA. 420+55
REF. ℄ CONST.
OFF. 35' LT.
ELEV. -15.0 (MUDLINE)
DATE 5/28/2020
DRILLER D. MCKENZIE
HAMMER AUTOMATIC
RIG CME 55

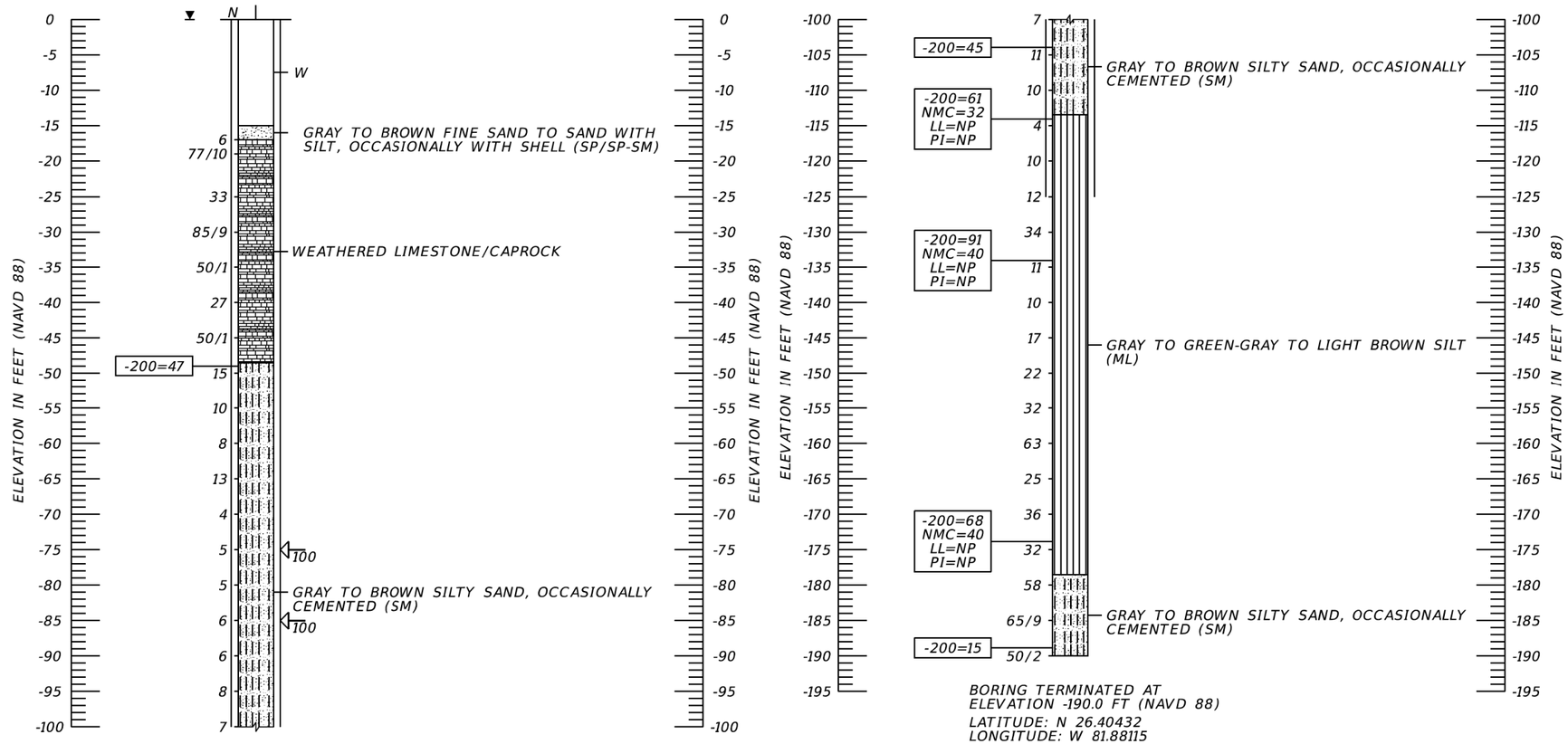

BB-420 CONTINUED

BORING TERMINATED AT
ELEVATION -190.0 FT (NAVD 88)
LATITUDE: N 26.40432
LONGITUDE: W 81.88115

LEGEND

- GRAY TO BROWN FINE SAND TO SAND WITH SILT, OCCASIONALLY WITH SHELL (SP/SP-SM)
- GRAY TO BROWN SILTY SAND, OCCASIONALLY CEMENTED (SM)
- WEATHERED LIMESTONE/CAPROCK
- GRAY TO GREEN-GRAY TO LIGHT BROWN SILT TO CLAYEY-SILT (ML/MH/ML-CL)
- GRAY TO BROWN SHELLY SAND (SP/SP-SM)
- GRAY TO DARK GRAY INDURATED CLAY (CL/CH)
- GRAY TO DARK GRAY CLAY (CL/CH)
- DARK BROWN ORGANIC SILTY SAND TO PEAT (Pt)
- GRAY TO LIGHT BROWN CLAYEY-SILTY SAND TO CLAYEY SAND (SM-SC/SC)

W	WATER LEVEL AT TIME OF FIELD ACTIVITIES
SP	UNIFIED SOIL CLASSIFICATION SYSTEM (ASTM D 2487) GROUP SYMBOL AS DETERMINED BY VISUAL REVIEW AND LABORATORY TESTING ON SELECTED SAMPLES FOR CONFIRMATION OF VISUAL REVIEW.
N	NUMBERS TO THE LEFT OF BORINGS INDICATE SPT VALUE FOR 12 INCHES OF PENETRATION (UNLESS OTHERWISE NOTED).
50/4	NUMBER OF BLOWS FOR 4 INCHES OF PENETRATION
HA	HAND AUGERED TO VERIFY UTILITY CLEARANCE
WH	SPLIT-SPOON SAMPLER ADVANCED UNDER WEIGHT OF ROD AND HAMMER
WR	SPLIT-SPOON SAMPLER ADVANCED UNDER WEIGHT OF ROD
-200	PERCENT PASSING #200 SIEVE
NMC	NATURAL MOISTURE CONTENT (%)
LL	LIQUID LIMIT (%)
PI	PLASTICITY INDEX (%)
NP	NON-PLASTIC
NAVD 88	NORTH AMERICAN VERTICAL DATUM OF 1988
	APPROXIMATE SPT BORING LOCATION
	GROUNDWATER LEVEL ENCOUNTERED DURING FIELD EXPLORATIONS
100	LOSS OF CIRCULATION OF DRILLING FLUID (%)
	CASING

℄ CONST. CENTERLINE CONSTRUCTION OF ESTERO BLVD. (CR 865)

	SAFETY HAMMER	AUTOMATIC HAMMER
GRANULAR MATERIALS- RELATIVE DENSITY	SPT N-VALUE (BLOWS/FT.)	SPT N-VALUE (BLOWS/FT.)
VERY LOOSE	LESS THAN 4	LESS THAN 3
LOOSE	4 to 10	3 to 8
MEDIUM DENSE	10 to 30	8 to 24
DENSE	30 to 50	24 to 40
VERY DENSE	GREATER THAN 50	GREATER THAN 40
SILTS AND CLAYS CONSISTENCY	SPT N-VALUE (BLOWS/FT.)	SPT N-VALUE (BLOWS/FT.)
VERY SOFT	LESS THAN 2	LESS THAN 1
SOFT	2 to 4	1 to 3
FIRM	4 to 8	3 to 6
STIFF	8 to 15	6 to 12
VERY STIFF	15 to 30	12 to 24
HARD	GREATER THAN 30	GREATER THAN 24

BRIDGE NO. 124143

NOTICE: THE OFFICIAL RECORD OF THIS SHEET IS THE ELECTRONIC FILE DIGITALLY SIGNED AND SEALED UNDER RULE 61G15-23.004, F.A.C.

REVISIONS

DATE	BY	DESCRIPTION	DATE	BY	DESCRIPTION

ERICK M. FREDERICK, P.E.
P.E. LICENSE NUMBER 63920
TIERRA, INC.
7351 TEMPLE TERRACE HIGHWAY
TAMPA, FLORIDA 33637

DRAWN BY: BJS
CHECKED BY: TM
DESIGNED BY: BJS
CHECKED BY: EMF

LEE COUNTY PUBLIC WORKS
DEPARTMENT OF TRANSPORTATION

ROAD NO.	COUNTY	COUNTY PROJECT No
CR 865	LEE	CN160002

SHEET TITLE: REPORT OF CORE BORINGS (4 OF 14)
REF. DWG. NO.
PROJECT NAME: ESTERO BLVD. (CR 865) OVER BIG CARLOS PASS
SHEET NO. B1-19

jhanna 2/24/2022 3:13:44 PM c:\pwworkingdir\kca-pw.bentley.com_kca-pw-01\josh hanna\dms00783\B1Boring04.dgn

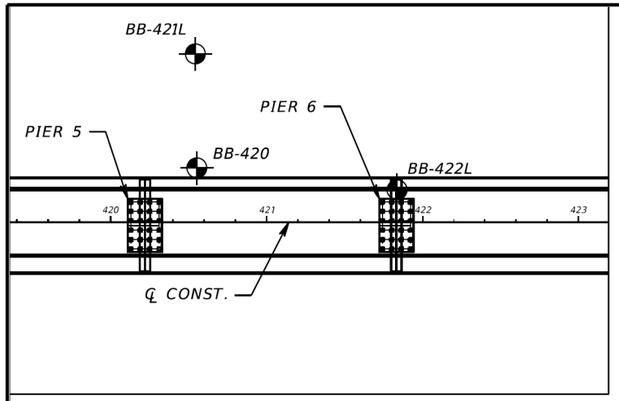

BORING LOCATION PLAN

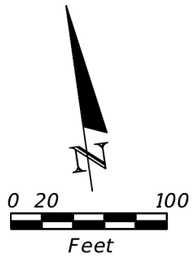

RECOMMENDED ENVIRONMENTAL CLASSIFICATION:

SUBSTRUCTURE	CONCRETE: EXTREMELY AGGRESSIVE
SUBSTRUCTURE	STEEL: EXTREMELY AGGRESSIVE
SUPERSTRUCTURE	EXTREMELY AGGRESSIVE

NOTE: BORING LOCATIONS AND ELEVATIONS DENOTED WITH AN ASTERISK "*" WERE PROVIDED BY THE PROJECT SURVEYOR. BORING LOCATIONS AND ELEVATIONS NOT DENOTED WITH AN ASTERISK "*" WERE DETERMINED USING PROJECT DESIGN FILES PROVIDED BY KISINGER CAMPO AND ASSOCIATES, CORP. IN CONJUNCTION WITH GPS COORDINATES OBTAINED BY TIERRA, INC. IN THE FIELD AND SHOULD BE CONSIDERED APPROXIMATE.

BOR # BB-421L
STA. 420+54
REF. ℄ CONST.
OFF. 108' LT.
ELEV. -18.0 (MUDLINE)
DATE 12/2/2017
DRILLER J. ERICKSON
HAMMER SAFETY
RIG D-25

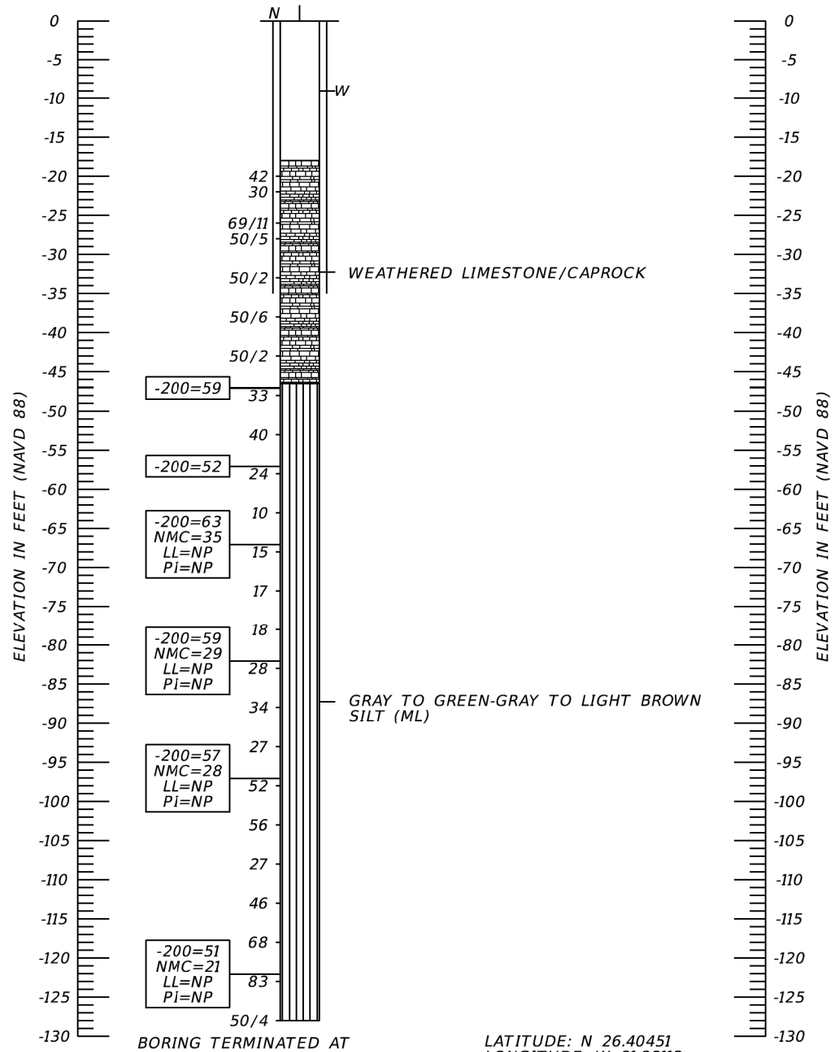

BORING TERMINATED AT ELEVATION -128.0 FT (NAVD 88)

LATITUDE: N 26.40451
LONGITUDE: W 81.88112

LEGEND

- GRAY TO BROWN FINE SAND TO SAND WITH SILT, OCCASIONALLY WITH SHELL (SP/SP-SM)
- GRAY TO BROWN SILTY SAND, OCCASIONALLY CEMENTED (SM)
- WEATHERED LIMESTONE/CAPROCK
- GRAY TO GREEN-GRAY TO LIGHT BROWN SILT TO CLAYEY-SILT (ML/MH/ML-CL)
- GRAY TO BROWN SHELLY SAND (SP/SP-SM)
- GRAY TO DARK GRAY INDURATED CLAY (CL/CH)
- GRAY TO DARK GRAY CLAY (CL/CH)
- DARK BROWN ORGANIC SILTY SAND TO PEAT (Pt)
- GRAY TO LIGHT BROWN CLAYEY-SILTY SAND TO CLAYEY SAND (SM-SC/SC)

W	WATER LEVEL AT TIME OF FIELD ACTIVITIES
SP	UNIFIED SOIL CLASSIFICATION SYSTEM (ASTM D 2487) GROUP SYMBOL AS DETERMINED BY VISUAL REVIEW AND LABORATORY TESTING ON SELECTED SAMPLES FOR CONFIRMATION OF VISUAL REVIEW.
N	NUMBERS TO THE LEFT OF BORINGS INDICATE SPT VALUE FOR 12 INCHES OF PENETRATION (UNLESS OTHERWISE NOTED).
50/4	NUMBER OF BLOWS FOR 4 INCHES OF PENETRATION
HA	HAND AUGERED TO VERIFY UTILITY CLEARANCE
WH	SPLIT-SPOON SAMPLER ADVANCED UNDER WEIGHT OF ROD AND HAMMER
WR	SPLIT-SPOON SAMPLER ADVANCED UNDER WEIGHT OF ROD
-200	PERCENT PASSING #200 SIEVE
NMC	NATURAL MOISTURE CONTENT (%)
LL	LIQUID LIMIT (%)
PI	PLASTICITY INDEX (%)
NP	NON-PLASTIC
NAVD 88	NORTH AMERICAN VERTICAL DATUM OF 1988
	APPROXIMATE SPT BORING LOCATION
	GROUNDWATER LEVEL ENCOUNTERED DURING FIELD EXPLORATIONS
100	LOSS OF CIRCULATION OF DRILLING FLUID (%)
	CASING
℄ CONST.	CENTERLINE CONSTRUCTION OF ESTERO BLVD. (CR 865)

	SAFETY HAMMER	AUTOMATIC HAMMER
GRANULAR MATERIALS- RELATIVE DENSITY	SPT N-VALUE (BLOWS/FT.)	SPT N-VALUE (BLOWS/FT.)
VERY LOOSE	LESS THAN 4	LESS THAN 3
LOOSE	4 to 10	3 to 8
MEDIUM DENSE	10 to 30	8 to 24
DENSE	30 to 50	24 to 40
VERY DENSE	GREATER THAN 50	GREATER THAN 40
SILTS AND CLAYS CONSISTENCY	SPT N-VALUE (BLOWS/FT.)	SPT N-VALUE (BLOWS/FT.)
VERY SOFT	LESS THAN 2	LESS THAN 1
SOFT	2 to 4	1 to 3
FIRM	4 to 8	3 to 6
STIFF	8 to 15	6 to 12
VERY STIFF	15 to 30	12 to 24
HARD	GREATER THAN 30	GREATER THAN 24

BRIDGE NO. 124143

NOTICE: THE OFFICIAL RECORD OF THIS SHEET IS THE ELECTRONIC FILE DIGITALLY SIGNED AND SEALED UNDER RULE 61G15-23.004, F.A.C.

REVISIONS

DATE	BY	DESCRIPTION	DATE	BY	DESCRIPTION

ERICK M. FREDERICK, P.E.
P.E. LICENSE NUMBER 63920
TIERRA, INC.
7351 TEMPLE TERRACE HIGHWAY
TAMPA, FLORIDA 33637

DRAWN BY: BJS
CHECKED BY: TM
DESIGNED BY: BJS
CHECKED BY: EMF

LEE COUNTY PUBLIC WORKS
DEPARTMENT OF TRANSPORTATION

ROAD NO.	COUNTY	COUNTY PROJECT No
CR 865	LEE	CN160002

SHEET TITLE: REPORT OF CORE BORINGS (5 OF 14)
REF. DWG. NO.
PROJECT NAME: ESTERO BLVD. (CR 865) OVER BIG CARLOS PASS
SHEET NO. B1-20

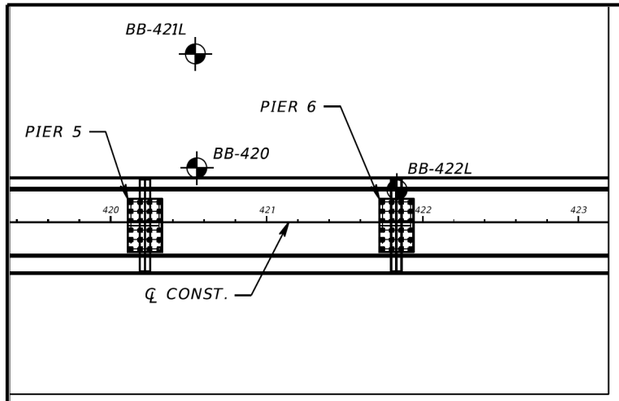

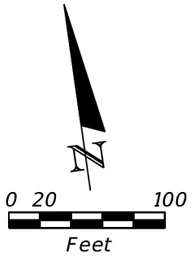

BORING LOCATION PLAN

RECOMMENDED ENVIRONMENTAL CLASSIFICATION:

SUBSTRUCTURE	CONCRETE: EXTREMELY AGGRESSIVE
SUBSTRUCTURE	STEEL: EXTREMELY AGGRESSIVE
SUPERSTRUCTURE	EXTREMELY AGGRESSIVE

NOTE: BORING LOCATIONS AND ELEVATIONS DENOTED WITH AN ASTERISK "*" WERE PROVIDED BY THE PROJECT SURVEYOR. BORING LOCATIONS AND ELEVATIONS NOT DENOTED WITH AN ASTERISK "*" WERE DETERMINED USING PROJECT DESIGN FILES PROVIDED BY KISINGER CAMPO AND ASSOCIATES, CORP. IN CONJUNCTION WITH GPS COORDINATES OBTAINED BY TIERRA, INC. IN THE FIELD AND SHOULD BE CONSIDERED APPROXIMATE.

BOR # BB-422L
STA. 421+83
REF. ℄ CONST.
OFF. 21' LT.
ELEV. -17.0 (MUDLINE)
DATE 12/3/2017
DRILLER J. ERICKSON
HAMMER SAFETY
RIG D-25

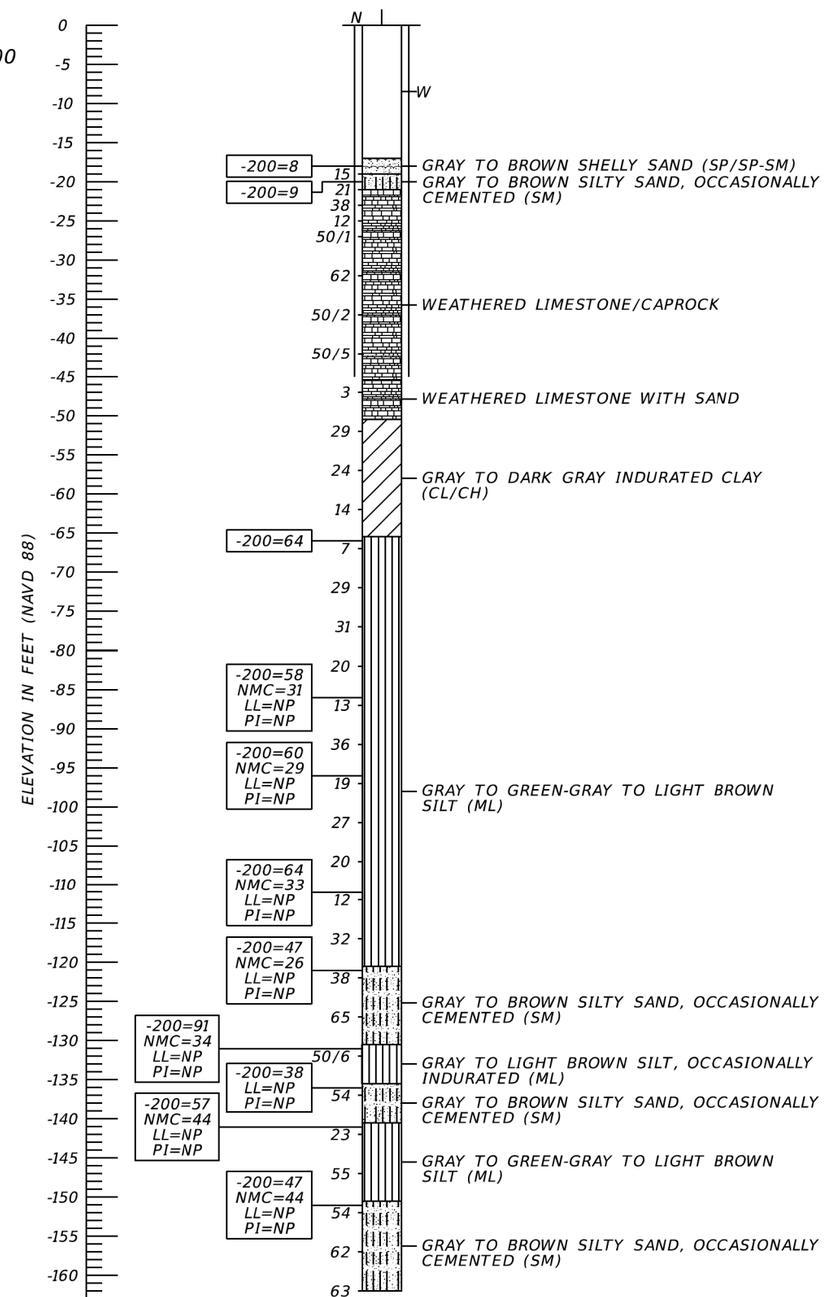

BORING TERMINATED AT ELEVATION -162.0 FT (NAVD 88)

LATITUDE: N 26.40423
LONGITUDE: W 81.88076

LEGEND

- GRAY TO BROWN FINE SAND TO SAND WITH SILT, OCCASIONALLY WITH SHELL (SP/SP-SM)
- GRAY TO BROWN SILTY SAND, OCCASIONALLY CEMENTED (SM)
- WEATHERED LIMESTONE/CAPROCK
- GRAY TO GREEN-GRAY TO LIGHT BROWN SILT TO CLAYEY-SILT (ML/MH/ML-CL)
- GRAY TO BROWN SHELLY SAND (SP/SP-SM)
- GRAY TO DARK GRAY INDURATED CLAY (CL/CH)
- GRAY TO DARK GRAY CLAY (CL/CH)
- DARK BROWN ORGANIC SILTY SAND TO PEAT (Pt)
- GRAY TO LIGHT BROWN CLAYEY-SILTY SAND TO CLAYEY SAND (SM-SC/SC)

W	WATER LEVEL AT TIME OF FIELD ACTIVITIES
SP	UNIFIED SOIL CLASSIFICATION SYSTEM (ASTM D 2487) GROUP SYMBOL AS DETERMINED BY VISUAL REVIEW AND LABORATORY TESTING ON SELECTED SAMPLES FOR CONFIRMATION OF VISUAL REVIEW.
N	NUMBERS TO THE LEFT OF BORINGS INDICATE SPT VALUE FOR 12 INCHES OF PENETRATION (UNLESS OTHERWISE NOTED).
50/4	NUMBER OF BLOWS FOR 4 INCHES OF PENETRATION
HA	HAND AUGERED TO VERIFY UTILITY CLEARANCE
WH	SPLIT-SPOON SAMPLER ADVANCED UNDER WEIGHT OF ROD AND HAMMER
WR	SPLIT-SPOON SAMPLER ADVANCED UNDER WEIGHT OF ROD
-200	PERCENT PASSING #200 SIEVE
NMC	NATURAL MOISTURE CONTENT (%)
LL	LIQUID LIMIT (%)
PI	PLASTICITY INDEX (%)
NP	NON-PLASTIC
NAVD 88	NORTH AMERICAN VERTICAL DATUM OF 1988
	APPROXIMATE SPT BORING LOCATION
	GROUNDWATER LEVEL ENCOUNTERED DURING FIELD EXPLORATIONS
100	LOSS OF CIRCULATION OF DRILLING FLUID (%)
	CASING

℄ CONST. CENTERLINE CONSTRUCTION OF ESTERO BLVD. (CR 865)

	SAFETY HAMMER	AUTOMATIC HAMMER
GRANULAR MATERIALS- RELATIVE DENSITY	SPT N-VALUE (BLOWS/FT.)	SPT N-VALUE (BLOWS/FT.)
VERY LOOSE	LESS THAN 4	LESS THAN 3
LOOSE	4 to 10	3 to 8
MEDIUM DENSE	10 to 30	8 to 24
DENSE	30 to 50	24 to 40
VERY DENSE	GREATER THAN 50	GREATER THAN 40
SILTS AND CLAYS CONSISTENCY	SPT N-VALUE (BLOWS/FT.)	SPT N-VALUE (BLOWS/FT.)
VERY SOFT	LESS THAN 2	LESS THAN 1
SOFT	2 to 4	1 to 3
FIRM	4 to 8	3 to 6
STIFF	8 to 15	6 to 12
VERY STIFF	15 to 30	12 to 24
HARD	GREATER THAN 30	GREATER THAN 24

BRIDGE NO. 124143

NOTICE: THE OFFICIAL RECORD OF THIS SHEET IS THE ELECTRONIC FILE DIGITALLY SIGNED AND SEALED UNDER RULE 61G15-23.004, F.A.C.

REVISIONS

DATE	BY	DESCRIPTION	DATE	BY	DESCRIPTION

ERICK M. FREDERICK, P.E.
P.E. LICENSE NUMBER 63920
TIERRA, INC.
7351 TEMPLE TERRACE HIGHWAY
TAMPA, FLORIDA 33637

DRAWN BY: BJS
CHECKED BY: TM
DESIGNED BY: BJS
CHECKED BY: EMF

LEE COUNTY PUBLIC WORKS
DEPARTMENT OF TRANSPORTATION

ROAD NO.	COUNTY	COUNTY PROJECT No
CR 865	LEE	CN160002

SHEET TITLE: REPORT OF CORE BORINGS (6 OF 14)
REF. DWG. NO.
PROJECT NAME: ESTERO BLVD. (CR 865) OVER BIG CARLOS PASS
SHEET NO. B1-21

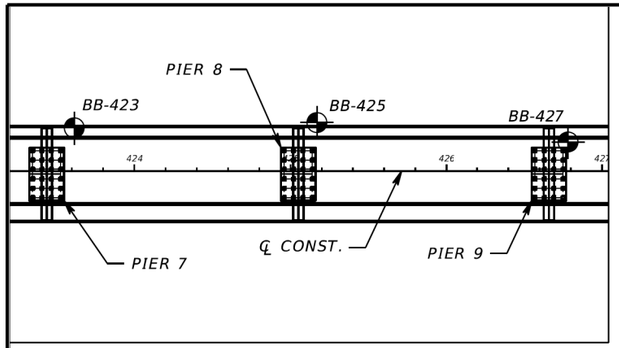

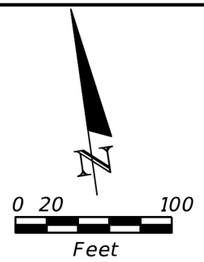

BORING LOCATION PLAN

RECOMMENDED ENVIRONMENTAL CLASSIFICATION:

SUBSTRUCTURE	CONCRETE: EXTREMELY AGGRESSIVE
SUBSTRUCTURE	STEEL: EXTREMELY AGGRESSIVE
SUPERSTRUCTURE	EXTREMELY AGGRESSIVE

NOTE: BORING LOCATIONS AND ELEVATIONS DENOTED WITH AN ASTERISK "*" WERE PROVIDED BY THE PROJECT SURVEYOR. BORING LOCATIONS AND ELEVATIONS NOT DENOTED WITH AN ASTERISK "*" WERE DETERMINED USING PROJECT DESIGN FILES PROVIDED BY KISINGER CAMPO AND ASSOCIATES, CORP. IN CONJUNCTION WITH GPS COORDINATES OBTAINED BY TIERRA, INC. IN THE FIELD AND SHOULD BE CONSIDERED APPROXIMATE.

BOR # BB-423
STA. 423+62
REF. ℄ CONST.
OFF. 28' LT.
ELEV. -15.0 (MUDLINE)
DATE 6/12/2020
DRILLER D. MCKENZIE
HAMMER AUTOMATIC
RIG CME 55

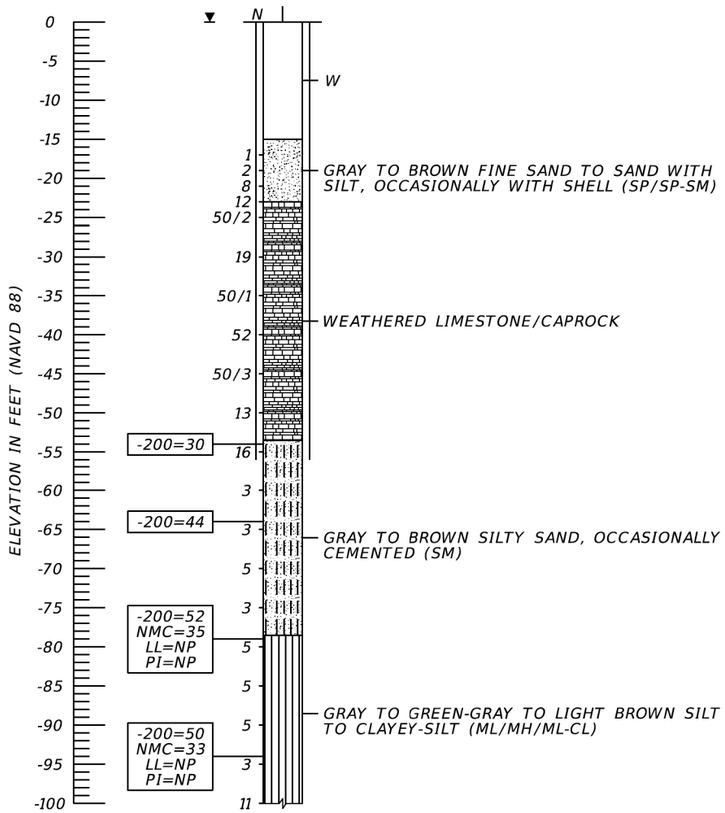

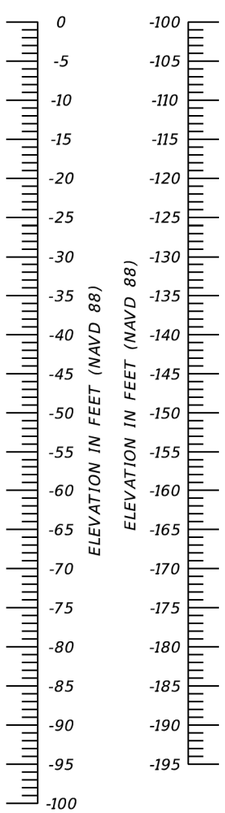

BB-423 CONTINUED

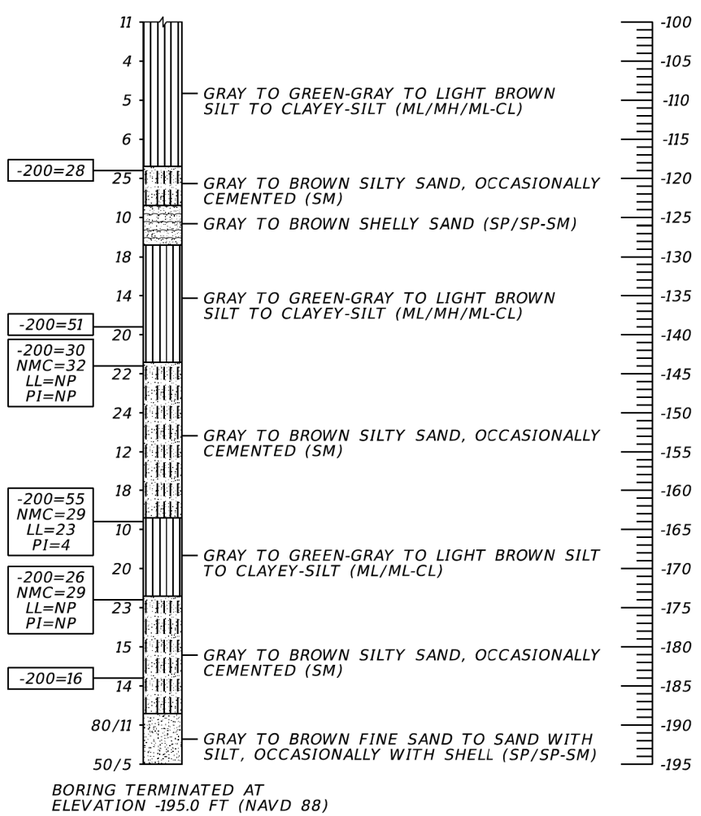

BORING TERMINATED AT
ELEVATION -195.0 FT (NAVD 88)
LATITUDE: N 26.40418
LONGITUDE: W 81.88022

LEGEND

- GRAY TO BROWN FINE SAND TO SAND WITH SILT, OCCASIONALLY WITH SHELL (SP/SP-SM)
- GRAY TO BROWN SILTY SAND, OCCASIONALLY CEMENTED (SM)
- WEATHERED LIMESTONE/CAPROCK
- GRAY TO GREEN-GRAY TO LIGHT BROWN SILT TO CLAYEY-SILT (ML/MH/ML-CL)
- GRAY TO BROWN SHELLY SAND (SP/SP-SM)
- GRAY TO DARK GRAY INDURATED CLAY (CL/CH)
- GRAY TO DARK GRAY CLAY (CL/CH)
- DARK BROWN ORGANIC SILTY SAND TO PEAT (Pt)
- GRAY TO LIGHT BROWN CLAYEY-SILTY SAND TO CLAYEY SAND (SM-SC/SC)

W	WATER LEVEL AT TIME OF FIELD ACTIVITIES
SP	UNIFIED SOIL CLASSIFICATION SYSTEM (ASTM D 2487) GROUP SYMBOL AS DETERMINED BY VISUAL REVIEW AND LABORATORY TESTING ON SELECTED SAMPLES FOR CONFIRMATION OF VISUAL REVIEW.
N	NUMBERS TO THE LEFT OF BORINGS INDICATE SPT VALUE FOR 12 INCHES OF PENETRATION (UNLESS OTHERWISE NOTED).
50/4	NUMBER OF BLOWS FOR 4 INCHES OF PENETRATION
HA	HAND AUGERED TO VERIFY UTILITY CLEARANCE
WH	SPLIT-SPOON SAMPLER ADVANCED UNDER WEIGHT OF ROD AND HAMMER
WR	SPLIT-SPOON SAMPLER ADVANCED UNDER WEIGHT OF ROD
-200	PERCENT PASSING #200 SIEVE
NMC	NATURAL MOISTURE CONTENT (%)
LL	LIQUID LIMIT (%)
PI	PLASTICITY INDEX (%)
NP	NON-PLASTIC
NAVD 88	NORTH AMERICAN VERTICAL DATUM OF 1988
	APPROXIMATE SPT BORING LOCATION
	GROUNDWATER LEVEL ENCOUNTERED DURING FIELD EXPLORATIONS
100	LOSS OF CIRCULATION OF DRILLING FLUID (%)
	CASING
℄ CONST.	CENTERLINE CONSTRUCTION OF ESTERO BLVD. (CR 865)

	SAFETY HAMMER	AUTOMATIC HAMMER
GRANULAR MATERIALS- RELATIVE DENSITY	SPT N-VALUE (BLOWS/FT.)	SPT N-VALUE (BLOWS/FT.)
VERY LOOSE	LESS THAN 4	LESS THAN 3
LOOSE	4 to 10	3 to 8
MEDIUM DENSE	10 to 30	8 to 24
DENSE	30 to 50	24 to 40
VERY DENSE	GREATER THAN 50	GREATER THAN 40
SILTS AND CLAYS CONSISTENCY	SPT N-VALUE (BLOWS/FT.)	SPT N-VALUE (BLOWS/FT.)
VERY SOFT	LESS THAN 2	LESS THAN 1
SOFT	2 to 4	1 to 3
FIRM	4 to 8	3 to 6
STIFF	8 to 15	6 to 12
VERY STIFF	15 to 30	12 to 24
HARD	GREATER THAN 30	GREATER THAN 24

BRIDGE NO. 124143

NOTICE: THE OFFICIAL RECORD OF THIS SHEET IS THE ELECTRONIC FILE DIGITALLY SIGNED AND SEALED UNDER RULE 61G15-23.004, F.A.C.

REVISIONS

DATE	BY	DESCRIPTION	DATE	BY	DESCRIPTION

ERICK M. FREDERICK, P.E.
P.E. LICENSE NUMBER 63920
TIERRA, INC.
7351 TEMPLE TERRACE HIGHWAY
TAMPA, FLORIDA 33637

DRAWN BY: BJS
CHECKED BY: TM
DESIGNED BY: BJS
CHECKED BY: EMF

LEE COUNTY PUBLIC WORKS
DEPARTMENT OF TRANSPORTATION

ROAD NO.	COUNTY	COUNTY PROJECT No
CR 865	LEE	CN160002

SHEET TITLE: REPORT OF CORE BORINGS (7 OF 14)
REF. DWG. NO.
PROJECT NAME: ESTERO BLVD. (CR 865) OVER BIG CARLOS PASS
SHEET NO. B1-22

jhanna 2/24/2022 3:14:20 PM c:\pwworkingdir\kca-pw.bentley.com_kca-pw-01\josh hanna\dms00783\B1Boring07.dgn

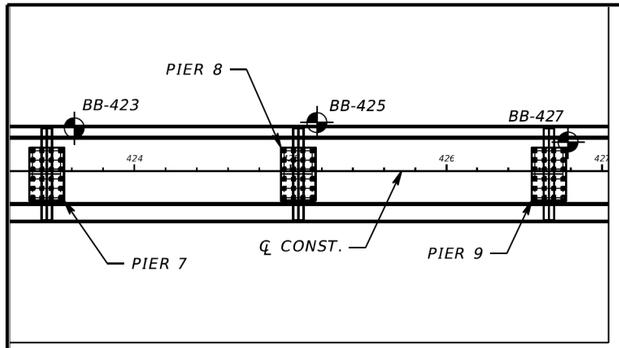

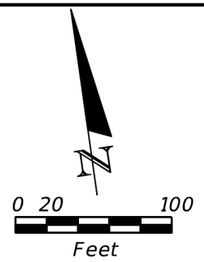

BORING LOCATION PLAN

BOR # BB-425
STA. 425+17
REF. ℄ CONST.
OFF. 31' LT.
ELEV. -15.0 (MUDLINE)
DATE 6/15/2020
DRILLER D. MCKENZIE
HAMMER AUTOMATIC
RIG CME 55

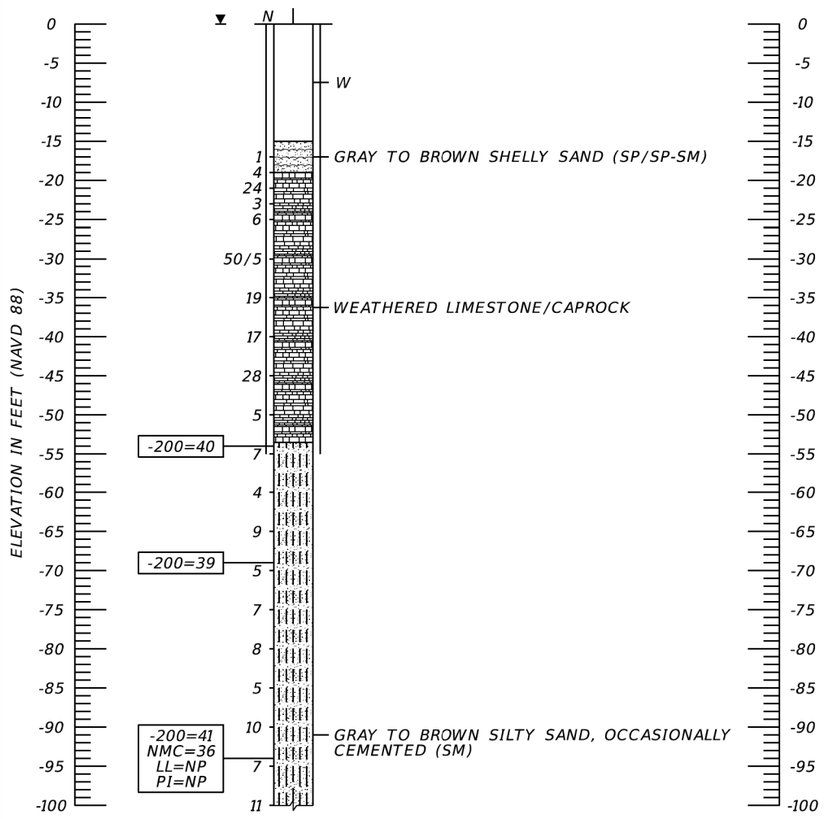

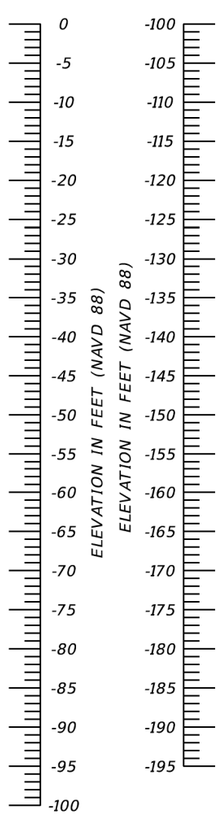

BB-425 CONTINUED

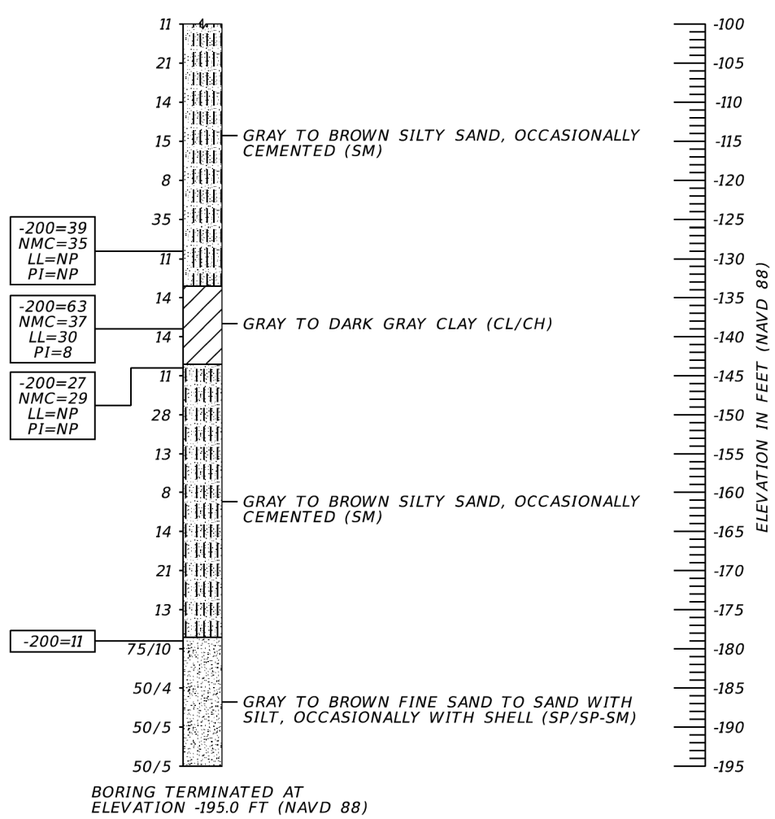

BORING TERMINATED AT ELEVATION -195.0 FT (NAVD 88)
LATITUDE: N 26.40413
LONGITUDE: W 81.87975

RECOMMENDED ENVIRONMENTAL CLASSIFICATION:

SUBSTRUCTURE	CONCRETE: EXTREMELY AGGRESSIVE
SUBSTRUCTURE	STEEL: EXTREMELY AGGRESSIVE
SUPERSTRUCTURE	EXTREMELY AGGRESSIVE

NOTE: BORING LOCATIONS AND ELEVATIONS DENOTED WITH AN ASTERISK "*" WERE PROVIDED BY THE PROJECT SURVEYOR. BORING LOCATIONS AND ELEVATIONS NOT DENOTED WITH AN ASTERISK "*" WERE DETERMINED USING PROJECT DESIGN FILES PROVIDED BY KISINGER CAMPO AND ASSOCIATES, CORP. IN CONJUNCTION WITH GPS COORDINATES OBTAINED BY TIERRA, INC. IN THE FIELD AND SHOULD BE CONSIDERED APPROXIMATE.

LEGEND

- GRAY TO BROWN FINE SAND TO SAND WITH SILT, OCCASIONALLY WITH SHELL (SP/SP-SM)
- GRAY TO BROWN SILTY SAND, OCCASIONALLY CEMENTED (SM)
- WEATHERED LIMESTONE/CAPROCK
- GRAY TO GREEN-GRAY TO LIGHT BROWN SILT TO CLAYEY-SILT (ML/MH/ML-CL)
- GRAY TO BROWN SHELLY SAND (SP/SP-SM)
- GRAY TO DARK GRAY INDURATED CLAY (CL/CH)
- GRAY TO DARK GRAY CLAY (CL/CH)
- DARK BROWN ORGANIC SILTY SAND TO PEAT (Pt)
- GRAY TO LIGHT BROWN CLAYEY-SILTY SAND TO CLAYEY SAND (SM-SC/SC)

W	WATER LEVEL AT TIME OF FIELD ACTIVITIES
SP	UNIFIED SOIL CLASSIFICATION SYSTEM (ASTM D 2487) GROUP SYMBOL AS DETERMINED BY VISUAL REVIEW AND LABORATORY TESTING ON SELECTED SAMPLES FOR CONFIRMATION OF VISUAL REVIEW.
N	NUMBERS TO THE LEFT OF BORINGS INDICATE SPT VALUE FOR 12 INCHES OF PENETRATION (UNLESS OTHERWISE NOTED).
50/4	NUMBER OF BLOWS FOR 4 INCHES OF PENETRATION
HA	HAND AUGERED TO VERIFY UTILITY CLEARANCE
WH	SPLIT-SPOON SAMPLER ADVANCED UNDER WEIGHT OF ROD AND HAMMER
WR	SPLIT-SPOON SAMPLER ADVANCED UNDER WEIGHT OF ROD
-200	PERCENT PASSING #200 SIEVE
NMC	NATURAL MOISTURE CONTENT (%)
LL	LIQUID LIMIT (%)
PI	PLASTICITY INDEX (%)
NP	NON-PLASTIC
NAVD 88	NORTH AMERICAN VERTICAL DATUM OF 1988
	APPROXIMATE SPT BORING LOCATION
	GROUNDWATER LEVEL ENCOUNTERED DURING FIELD EXPLORATIONS
100	LOSS OF CIRCULATION OF DRILLING FLUID (%)
	CASING
℄ CONST.	CENTERLINE CONSTRUCTION OF ESTERO BLVD. (CR 865)

	SAFETY HAMMER	AUTOMATIC HAMMER
GRANULAR MATERIALS- RELATIVE DENSITY	SPT N-VALUE (BLOWS/FT.)	SPT N-VALUE (BLOWS/FT.)
VERY LOOSE	LESS THAN 4	LESS THAN 3
LOOSE	4 to 10	3 to 8
MEDIUM DENSE	10 to 30	8 to 24
DENSE	30 to 50	24 to 40
VERY DENSE	GREATER THAN 50	GREATER THAN 40
SILTS AND CLAYS CONSISTENCY	SPT N-VALUE (BLOWS/FT.)	SPT N-VALUE (BLOWS/FT.)
VERY SOFT	LESS THAN 2	LESS THAN 1
SOFT	2 to 4	1 to 3
FIRM	4 to 8	3 to 6
STIFF	8 to 15	6 to 12
VERY STIFF	15 to 30	12 to 24
HARD	GREATER THAN 30	GREATER THAN 24

BRIDGE NO. 124143

NOTICE: THE OFFICIAL RECORD OF THIS SHEET IS THE ELECTRONIC FILE DIGITALLY SIGNED AND SEALED UNDER RULE 61G15-23.004, F.A.C.

REVISIONS

DATE	BY	DESCRIPTION	DATE	BY	DESCRIPTION

ERICK M. FREDERICK, P.E.
P.E. LICENSE NUMBER 63920
TIERRA, INC.
7351 TEMPLE TERRACE HIGHWAY
TAMPA, FLORIDA 33637

DRAWN BY: BJS
CHECKED BY: TM
DESIGNED BY: BJS
CHECKED BY: EMF

LEE COUNTY PUBLIC WORKS
DEPARTMENT OF TRANSPORTATION

ROAD NO.	COUNTY	COUNTY PROJECT No
CR 865	LEE	CN160002

SHEET TITLE: REPORT OF CORE BORINGS (8 OF 14)
REF. DWG. NO.
PROJECT NAME: ESTERO BLVD. (CR 865) OVER BIG CARLOS PASS
SHEET NO. B1-23

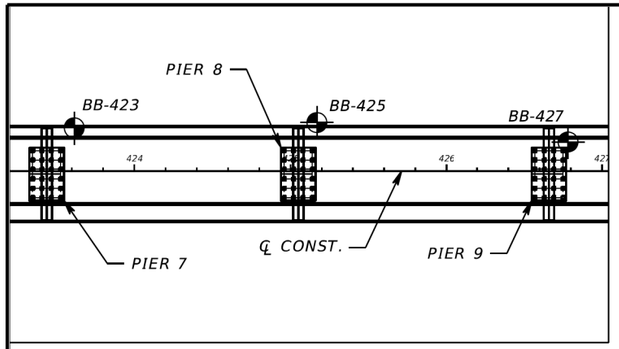

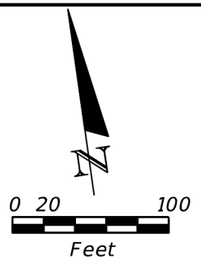

RECOMMENDED ENVIRONMENTAL CLASSIFICATION:

SUBSTRUCTURE	CONCRETE: EXTREMELY AGGRESSIVE
SUBSTRUCTURE	STEEL: EXTREMELY AGGRESSIVE
SUPERSTRUCTURE	EXTREMELY AGGRESSIVE

NOTE: BORING LOCATIONS AND ELEVATIONS DENOTED WITH AN ASTERISK "*" WERE PROVIDED BY THE PROJECT SURVEYOR. BORING LOCATIONS AND ELEVATIONS NOT DENOTED WITH AN ASTERISK "*" WERE DETERMINED USING PROJECT DESIGN FILES PROVIDED BY KISINGER CAMPO AND ASSOCIATES, CORP. IN CONJUNCTION WITH GPS COORDINATES OBTAINED BY TIERRA, INC. IN THE FIELD AND SHOULD BE CONSIDERED APPROXIMATE.

LEGEND

- GRAY TO BROWN FINE SAND TO SAND WITH SILT, OCCASIONALLY WITH SHELL (SP/SP-SM)
- GRAY TO BROWN SILTY SAND, OCCASIONALLY CEMENTED (SM)
- WEATHERED LIMESTONE/CAPROCK
- GRAY TO GREEN-GRAY TO LIGHT BROWN SILT TO CLAYEY-SILT (ML/MH/ML-CL)
- GRAY TO BROWN SHELLY SAND (SP/SP-SM)
- GRAY TO DARK GRAY INDURATED CLAY (CL/CH)
- GRAY TO DARK GRAY CLAY (CL/CH)
- DARK BROWN ORGANIC SILTY SAND TO PEAT (Pt)
- GRAY TO LIGHT BROWN CLAYEY-SILTY SAND TO CLAYEY SAND (SM-SC/SC)

W	WATER LEVEL AT TIME OF FIELD ACTIVITIES
SP	UNIFIED SOIL CLASSIFICATION SYSTEM (ASTM D 2487) GROUP SYMBOL AS DETERMINED BY VISUAL REVIEW AND LABORATORY TESTING ON SELECTED SAMPLES FOR CONFIRMATION OF VISUAL REVIEW.
N	NUMBERS TO THE LEFT OF BORINGS INDICATE SPT VALUE FOR 12 INCHES OF PENETRATION (UNLESS OTHERWISE NOTED).
50/4	NUMBER OF BLOWS FOR 4 INCHES OF PENETRATION
HA	HAND AUGERED TO VERIFY UTILITY CLEARANCE
WH	SPLIT-SPOON SAMPLER ADVANCED UNDER WEIGHT OF ROD AND HAMMER
WR	SPLIT-SPOON SAMPLER ADVANCED UNDER WEIGHT OF ROD
-200	PERCENT PASSING #200 SIEVE
NMC	NATURAL MOISTURE CONTENT (%)
LL	LIQUID LIMIT (%)
PI	PLASTICITY INDEX (%)
NP	NON-PLASTIC
NAVD 88	NORTH AMERICAN VERTICAL DATUM OF 1988
	APPROXIMATE SPT BORING LOCATION
	GROUNDWATER LEVEL ENCOUNTERED DURING FIELD EXPLORATIONS
100	LOSS OF CIRCULATION OF DRILLING FLUID (%)
	CASING
℄ CONST.	CENTERLINE CONSTRUCTION OF ESTERO BLVD. (CR 865)

BORING LOCATION PLAN

BOR # BB-427
STA. 426+78
REF. ℄ CONST.
OFF. 18' LT.
ELEV. -15.0 (MUDLINE)
DATE 6/25/2020
DRILLER D. MCKENZIE
HAMMER AUTOMATIC
RIG CME 55

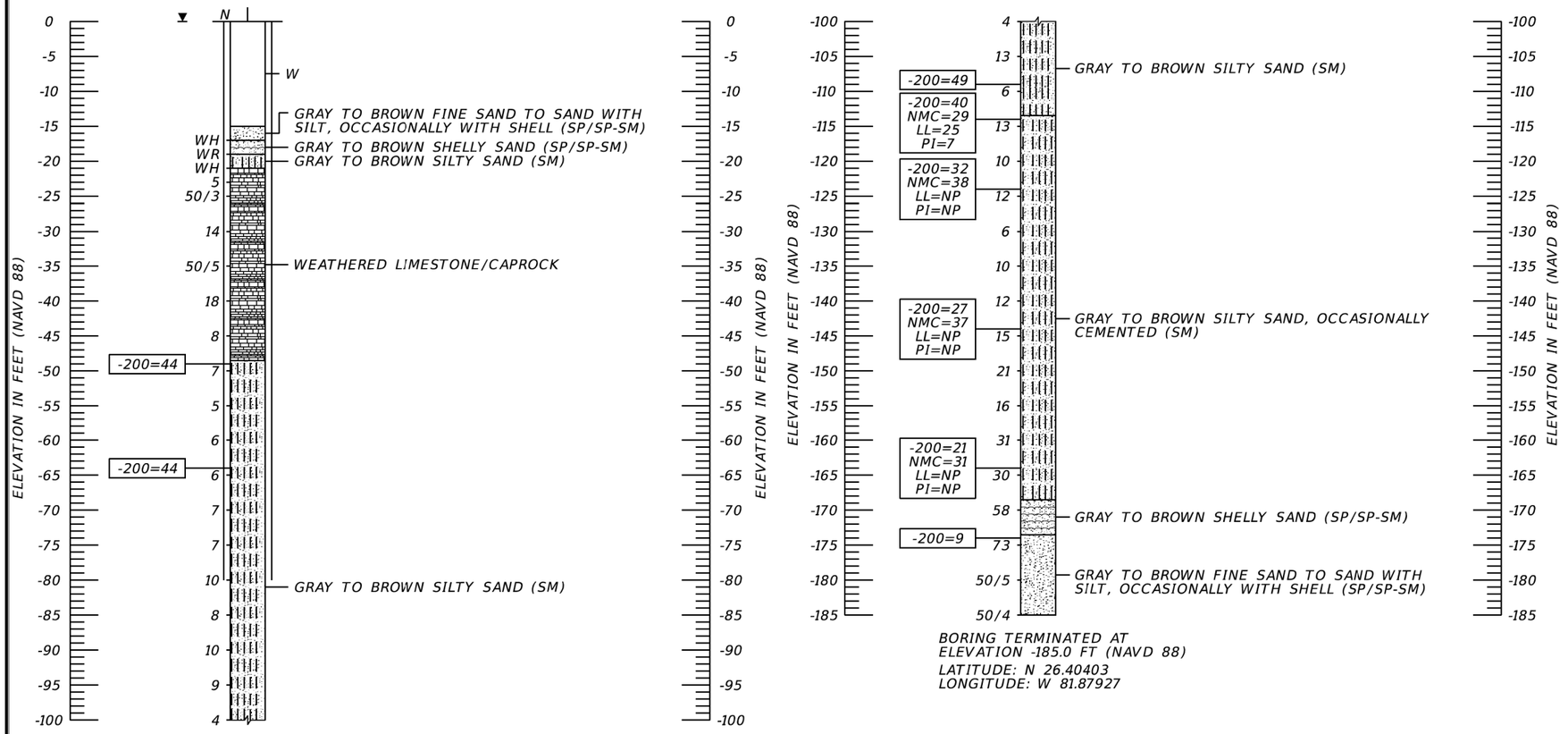

BB-427 CONTINUED

BORING TERMINATED AT
ELEVATION -185.0 FT (NAVD 88)
LATITUDE: N 26.40403
LONGITUDE: W 81.87927

	SAFETY HAMMER	AUTOMATIC HAMMER
GRANULAR MATERIALS- RELATIVE DENSITY	SPT N-VALUE (BLOWS/FT.)	SPT N-VALUE (BLOWS/FT.)
VERY LOOSE	LESS THAN 4	LESS THAN 3
LOOSE	4 to 10	3 to 8
MEDIUM DENSE	10 to 30	8 to 24
DENSE	30 to 50	24 to 40
VERY DENSE	GREATER THAN 50	GREATER THAN 40
SILTS AND CLAYS CONSISTENCY	SPT N-VALUE (BLOWS/FT.)	SPT N-VALUE (BLOWS/FT.)
VERY SOFT	LESS THAN 2	LESS THAN 1
SOFT	2 to 4	1 to 3
FIRM	4 to 8	3 to 6
STIFF	8 to 15	6 to 12
VERY STIFF	15 to 30	12 to 24
HARD	GREATER THAN 30	GREATER THAN 24

BRIDGE NO. 124143

NOTICE: THE OFFICIAL RECORD OF THIS SHEET IS THE ELECTRONIC FILE DIGITALLY SIGNED AND SEALED UNDER RULE 61G15-23.004, F.A.C.

REVISIONS

DATE	BY	DESCRIPTION	DATE	BY	DESCRIPTION

ERICK M. FREDERICK, P.E.
P.E. LICENSE NUMBER 63920
TIERRA, INC.
7351 TEMPLE TERRACE HIGHWAY
TAMPA, FLORIDA 33637

DRAWN BY: BJS
CHECKED BY: TM
DESIGNED BY: BJS
CHECKED BY: EMF

LEE COUNTY PUBLIC WORKS
DEPARTMENT OF TRANSPORTATION

ROAD NO.	COUNTY	COUNTY PROJECT No
CR 865	LEE	CN160002

SHEET TITLE: REPORT OF CORE BORINGS (9 OF 14)
REF. DWG. NO.
PROJECT NAME: ESTERO BLVD. (CR 865) OVER BIG CARLOS PASS
SHEET NO. B1-24

jhanna 2/24/2022 3:14:45 PM c:\pwworkingdir\kca-pw.bentley.com_kca-pw-01\josh hanna\dms00783\B1Boring09.dgn

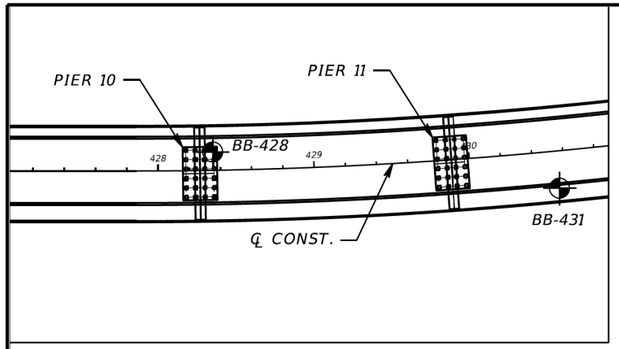

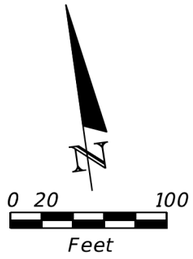

RECOMMENDED ENVIRONMENTAL CLASSIFICATION:

SUBSTRUCTURE	CONCRETE: EXTREMELY AGGRESSIVE
SUBSTRUCTURE	STEEL: EXTREMELY AGGRESSIVE
SUPERSTRUCTURE	EXTREMELY AGGRESSIVE

NOTE: BORING LOCATIONS AND ELEVATIONS DENOTED WITH AN ASTERISK "*" WERE PROVIDED BY THE PROJECT SURVEYOR. BORING LOCATIONS AND ELEVATIONS NOT DENOTED WITH AN ASTERISK "*" WERE DETERMINED USING PROJECT DESIGN FILES PROVIDED BY KISINGER CAMPO AND ASSOCIATES, CORP. IN CONJUNCTION WITH GPS COORDINATES OBTAINED BY TIERRA, INC. IN THE FIELD AND SHOULD BE CONSIDERED APPROXIMATE.

LEGEND

- GRAY TO BROWN FINE SAND TO SAND WITH SILT, OCCASIONALLY WITH SHELL (SP/SP-SM)
- GRAY TO BROWN SILTY SAND, OCCASIONALLY CEMENTED (SM)
- WEATHERED LIMESTONE/CAPROCK
- GRAY TO GREEN-GRAY TO LIGHT BROWN SILT TO CLAYEY-SILT (ML/MH/ML-CL)
- GRAY TO BROWN SHELLY SAND (SP/SP-SM)
- GRAY TO DARK GRAY INDURATED CLAY (CL/CH)
- GRAY TO DARK GRAY CLAY (CL/CH)
- DARK BROWN ORGANIC SILTY SAND TO PEAT (Pt)
- GRAY TO LIGHT BROWN CLAYEY-SILTY SAND TO CLAYEY SAND (SM-SC/SC)

W	WATER LEVEL AT TIME OF FIELD ACTIVITIES
SP	UNIFIED SOIL CLASSIFICATION SYSTEM (ASTM D 2487) GROUP SYMBOL AS DETERMINED BY VISUAL REVIEW AND LABORATORY TESTING ON SELECTED SAMPLES FOR CONFIRMATION OF VISUAL REVIEW.
N	NUMBERS TO THE LEFT OF BORINGS INDICATE SPT VALUE FOR 12 INCHES OF PENETRATION (UNLESS OTHERWISE NOTED).
50/4	NUMBER OF BLOWS FOR 4 INCHES OF PENETRATION
HA	HAND AUGERED TO VERIFY UTILITY CLEARANCE
WH	SPLIT-SPOON SAMPLER ADVANCED UNDER WEIGHT OF ROD AND HAMMER
WR	SPLIT-SPOON SAMPLER ADVANCED UNDER WEIGHT OF ROD
-200	PERCENT PASSING #200 SIEVE
NMC	NATURAL MOISTURE CONTENT (%)
LL	LIQUID LIMIT (%)
PI	PLASTICITY INDEX (%)
NP	NON-PLASTIC
NAVD 88	NORTH AMERICAN VERTICAL DATUM OF 1988

APPROXIMATE SPT BORING LOCATION

GROUNDWATER LEVEL ENCOUNTERED DURING FIELD EXPLORATIONS

100 LOSS OF CIRCULATION OF DRILLING FLUID (%)

CASING

℄ CONST. CENTERLINE CONSTRUCTION OF ESTERO BLVD. (CR 865)

BORING LOCATION PLAN

BOR # BB-428
STA. 428+35
REF. ℄ CONST.
OFF. 12' LT.
ELEV. -5.0 (MUDLINE)
DATE 6/23/2020
DRILLER D. MCKENZIE
HAMMER AUTOMATIC
RIG CME 55

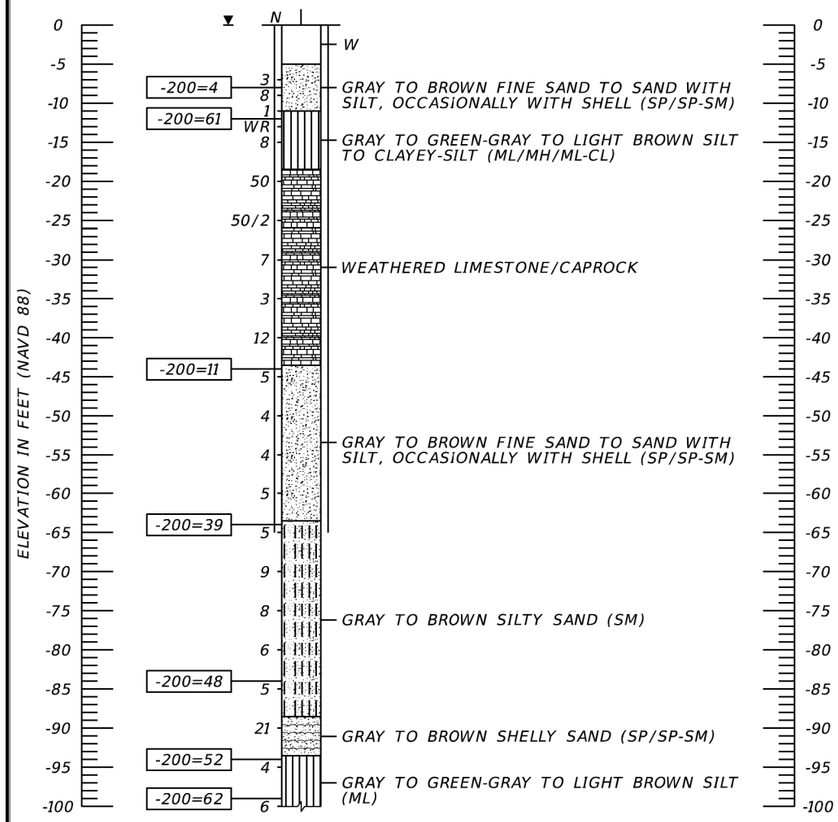

BB-428 CONTINUED

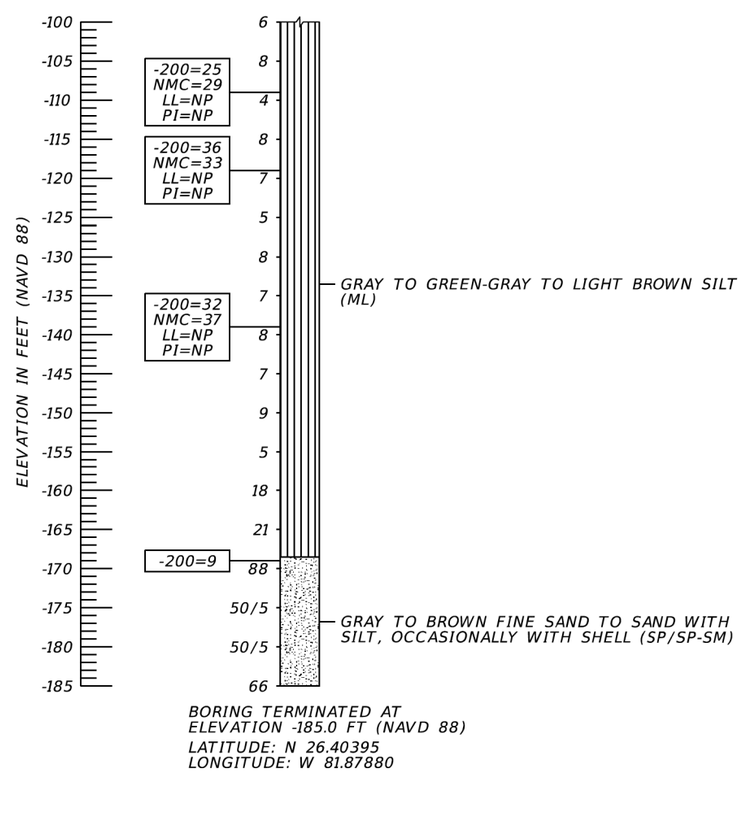

BORING TERMINATED AT ELEVATION -185.0 FT (NAVD 88)
LATITUDE: N 26.40395
LONGITUDE: W 81.87880

	SAFETY HAMMER	AUTOMATIC HAMMER
GRANULAR MATERIALS- RELATIVE DENSITY	SPT N-VALUE (BLOWS/FT.)	SPT N-VALUE (BLOWS/FT.)
VERY LOOSE	LESS THAN 4	LESS THAN 3
LOOSE	4 to 10	3 to 8
MEDIUM DENSE	10 to 30	8 to 24
DENSE	30 to 50	24 to 40
VERY DENSE	GREATER THAN 50	GREATER THAN 40
SILTS AND CLAYS CONSISTENCY	SPT N-VALUE (BLOWS/FT.)	SPT N-VALUE (BLOWS/FT.)
VERY SOFT	LESS THAN 2	LESS THAN 1
SOFT	2 to 4	1 to 3
FIRM	4 to 8	3 to 6
STIFF	8 to 15	6 to 12
VERY STIFF	15 to 30	12 to 24
HARD	GREATER THAN 30	GREATER THAN 24

BRIDGE NO. 124143

NOTICE: THE OFFICIAL RECORD OF THIS SHEET IS THE ELECTRONIC FILE DIGITALLY SIGNED AND SEALED UNDER RULE 61G15-23.004, F.A.C.

REVISIONS

DATE	BY	DESCRIPTION	DATE	BY	DESCRIPTION

ERICK M. FREDERICK, P.E.
P.E. LICENSE NUMBER 63920
TIERRA, INC.
7351 TEMPLE TERRACE HIGHWAY
TAMPA, FLORIDA 33637

DRAWN BY: BJS
CHECKED BY: TM
DESIGNED BY: BJS
CHECKED BY: EMF

LEE COUNTY PUBLIC WORKS
DEPARTMENT OF TRANSPORTATION

ROAD NO.	COUNTY	COUNTY PROJECT No
CR 865	LEE	CN160002

SHEET TITLE: REPORT OF CORE BORINGS (10 OF 14)
REF. DWG. NO.
PROJECT NAME: ESTERO BLVD. (CR 865) OVER BIG CARLOS PASS
SHEET NO. B1-25

jhanna 2/24/2022 3:14:58 PM c:\pwworkingdir\kca-pw.bentley.com_kca-pw-01\josh hanna\dms00783\B1Boring10.dgn

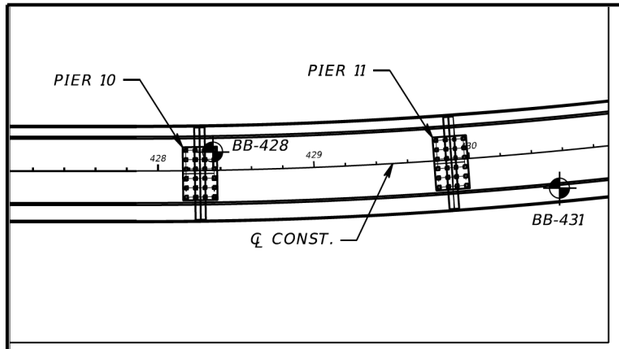

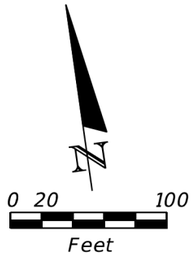

BORING LOCATION PLAN

RECOMMENDED ENVIRONMENTAL CLASSIFICATION:

SUBSTRUCTURE	CONCRETE: EXTREMELY AGGRESSIVE
SUBSTRUCTURE	STEEL: EXTREMELY AGGRESSIVE
SUPERSTRUCTURE	EXTREMELY AGGRESSIVE

NOTE: BORING LOCATIONS AND ELEVATIONS DENOTED WITH AN ASTERISK "*" WERE PROVIDED BY THE PROJECT SURVEYOR. BORING LOCATIONS AND ELEVATIONS NOT DENOTED WITH AN ASTERISK "*" WERE DETERMINED USING PROJECT DESIGN FILES PROVIDED BY KISINGER CAMPO AND ASSOCIATES, CORP. IN CONJUNCTION WITH GPS COORDINATES OBTAINED BY TIERRA, INC. IN THE FIELD AND SHOULD BE CONSIDERED APPROXIMATE.

BOR # BB-431
STA. 430+54
REF. ℄ CONST.
OFF. 23' RT.
ELEV. 2.8
DATE 7/16/2019
DRILLER D. STAKELIN
HAMMER AUTOMATIC
RIG D-25

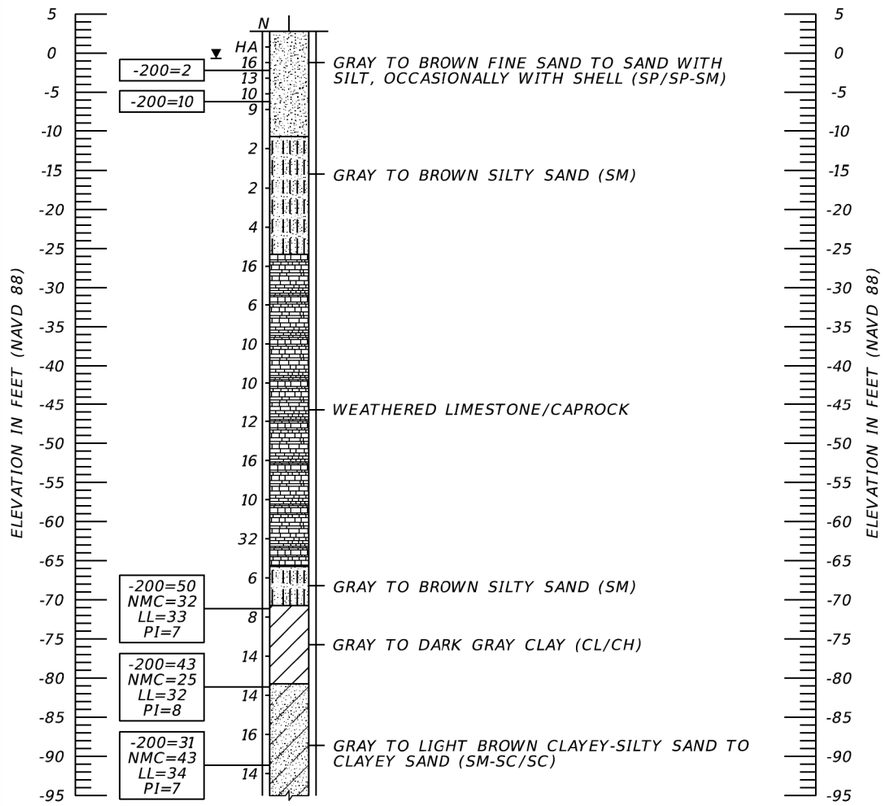

BB-431 (CONTINUED)

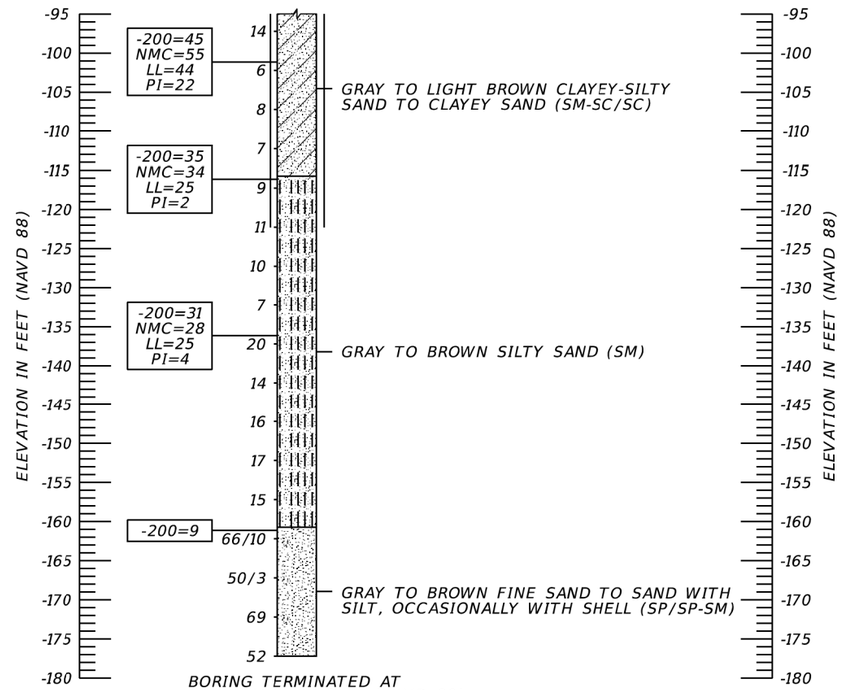

BORING TERMINATED AT
ELEVATION -177.2 FT (NAVD 88)
LATITUDE: N 26.40380
LONGITUDE: W 81.87813

LEGEND

- GRAY TO BROWN FINE SAND TO SAND WITH SILT, OCCASIONALLY WITH SHELL (SP/SP-SM)
- GRAY TO BROWN SILTY SAND, OCCASIONALLY CEMENTED (SM)
- WEATHERED LIMESTONE/CAPROCK
- GRAY TO GREEN-GRAY TO LIGHT BROWN SILT TO CLAYEY-SILT (ML/MH/ML-CL)
- GRAY TO BROWN SHELLY SAND (SP/SP-SM)
- GRAY TO DARK GRAY INDURATED CLAY (CL/CH)
- GRAY TO DARK GRAY CLAY (CL/CH)
- DARK BROWN ORGANIC SILTY SAND TO PEAT (Pt)
- GRAY TO LIGHT BROWN CLAYEY-SILTY SAND TO CLAYEY SAND (SM-SC/SC)

W	WATER LEVEL AT TIME OF FIELD ACTIVITIES
SP	UNIFIED SOIL CLASSIFICATION SYSTEM (ASTM D 2487) GROUP SYMBOL AS DETERMINED BY VISUAL REVIEW AND LABORATORY TESTING ON SELECTED SAMPLES FOR CONFIRMATION OF VISUAL REVIEW.
N	NUMBERS TO THE LEFT OF BORINGS INDICATE SPT VALUE FOR 12 INCHES OF PENETRATION (UNLESS OTHERWISE NOTED).
50/4	NUMBER OF BLOWS FOR 4 INCHES OF PENETRATION
HA	HAND AUGERED TO VERIFY UTILITY CLEARANCE
WH	SPLIT-SPOON SAMPLER ADVANCED UNDER WEIGHT OF ROD AND HAMMER
WR	SPLIT-SPOON SAMPLER ADVANCED UNDER WEIGHT OF ROD
-200	PERCENT PASSING #200 SIEVE
NMC	NATURAL MOISTURE CONTENT (%)
LL	LIQUID LIMIT (%)
PI	PLASTICITY INDEX (%)
NP	NON-PLASTIC
NAVD 88	NORTH AMERICAN VERTICAL DATUM OF 1988
	APPROXIMATE SPT BORING LOCATION
	GROUNDWATER LEVEL ENCOUNTERED DURING FIELD EXPLORATIONS
100	LOSS OF CIRCULATION OF DRILLING FLUID (%)
	CASING
℄ CONST.	CENTERLINE CONSTRUCTION OF ESTERO BLVD. (CR 865)

	SAFETY HAMMER	AUTOMATIC HAMMER
GRANULAR MATERIALS- RELATIVE DENSITY	SPT N-VALUE (BLOWS/FT.)	SPT N-VALUE (BLOWS/FT.)
VERY LOOSE	LESS THAN 4	LESS THAN 3
LOOSE	4 to 10	3 to 8
MEDIUM DENSE	10 to 30	8 to 24
DENSE	30 to 50	24 to 40
VERY DENSE	GREATER THAN 50	GREATER THAN 40
SILTS AND CLAYS CONSISTENCY	SPT N-VALUE (BLOWS/FT.)	SPT N-VALUE (BLOWS/FT.)
VERY SOFT	LESS THAN 2	LESS THAN 1
SOFT	2 to 4	1 to 3
FIRM	4 to 8	3 to 6
STIFF	8 to 15	6 to 12
VERY STIFF	15 to 30	12 to 24
HARD	GREATER THAN 30	GREATER THAN 24

BRIDGE NO. 124143

NOTICE: THE OFFICIAL RECORD OF THIS SHEET IS THE ELECTRONIC FILE DIGITALLY SIGNED AND SEALED UNDER RULE 61G15-23.004, F.A.C.

REVISIONS

DATE	BY	DESCRIPTION	DATE	BY	DESCRIPTION

ERICK M. FREDERICK, P.E.
P.E. LICENSE NUMBER 63920
TIERRA, INC.
7351 TEMPLE TERRACE HIGHWAY
TAMPA, FLORIDA 33637

DRAWN BY: BJS
CHECKED BY: TM
DESIGNED BY: BJS
CHECKED BY: EMF

LEE COUNTY PUBLIC WORKS
DEPARTMENT OF TRANSPORTATION

ROAD NO.	COUNTY	COUNTY PROJECT No
CR 865	LEE	CN160002

SHEET TITLE: REPORT OF CORE BORINGS (11 OF 14)
REF. DWG. NO.
PROJECT NAME: ESTERO BLVD. (CR 865) OVER BIG CARLOS PASS
SHEET NO. B1-26

jhanna 2/24/2022 3:15:10 PM c:\pwworkingdir\kca-pw.bentley.com_kca-pw-01\josh hanna\dms00783\B1Boring11.dgn

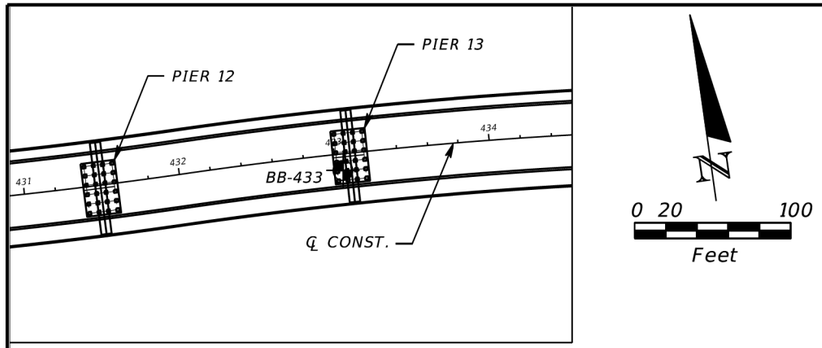

BORING LOCATION PLAN

RECOMMENDED ENVIRONMENTAL CLASSIFICATION:

SUBSTRUCTURE	CONCRETE: EXTREMELY AGGRESSIVE
SUBSTRUCTURE	STEEL: EXTREMELY AGGRESSIVE
SUPERSTRUCTURE	EXTREMELY AGGRESSIVE

NOTE: BORING LOCATIONS AND ELEVATIONS DENOTED WITH AN ASTERISK "*" WERE PROVIDED BY THE PROJECT SURVEYOR. BORING LOCATIONS AND ELEVATIONS NOT DENOTED WITH AN ASTERISK "*" WERE DETERMINED USING PROJECT DESIGN FILES PROVIDED BY KISINGER CAMPO AND ASSOCIATES, CORP. IN CONJUNCTION WITH GPS COORDINATES OBTAINED BY TIERRA, INC. IN THE FIELD AND SHOULD BE CONSIDERED APPROXIMATE.

BOR # BB-433*
STA. 433+02
REF. ℄ CONST.
OFF. 9' RT.
ELEV. 10.7
DATE 11/18/2019
DRILLER D. STAKELIN
HAMMER AUTOMATIC
RIG D-25

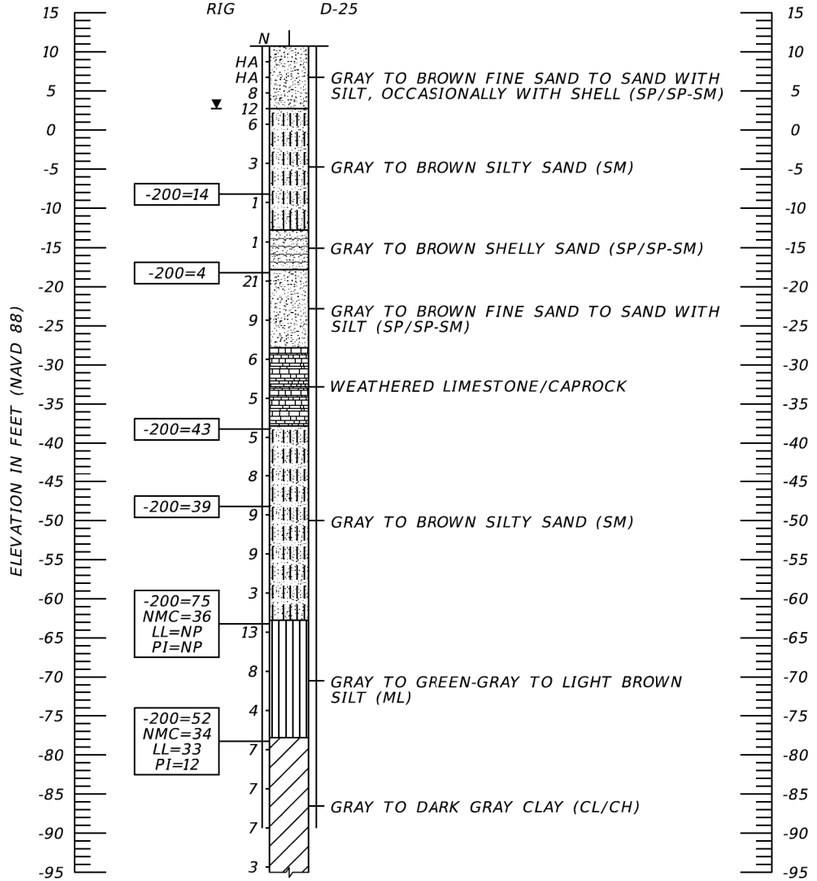

BB-433 (CONTINUED)

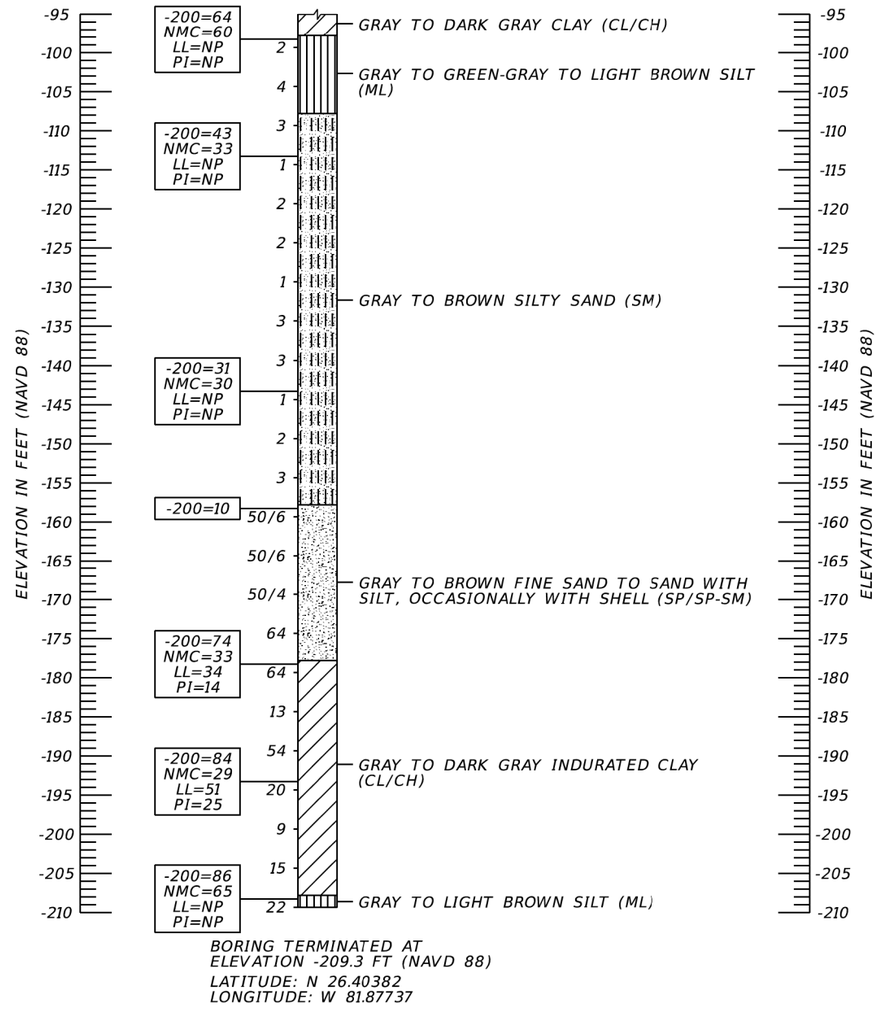

BORING TERMINATED AT ELEVATION -209.3 FT (NAVD 88)
LATITUDE: N 26.40382
LONGITUDE: W 81.87737

LEGEND

- GRAY TO BROWN FINE SAND TO SAND WITH SILT, OCCASIONALLY WITH SHELL (SP/SP-SM)
- GRAY TO BROWN SILTY SAND, OCCASIONALLY CEMENTED (SM)
- WEATHERED LIMESTONE/CAPROCK
- GRAY TO GREEN-GRAY TO LIGHT BROWN SILT TO CLAYEY-SILT (ML/MH/ML-CL)
- GRAY TO BROWN SHELLY SAND (SP/SP-SM)
- GRAY TO DARK GRAY INDURATED CLAY (CL/CH)
- GRAY TO DARK GRAY CLAY (CL/CH)
- DARK BROWN ORGANIC SILTY SAND TO PEAT (Pt)
- GRAY TO LIGHT BROWN CLAYEY-SILTY SAND TO CLAYEY SAND (SM-SC/SC)

W	WATER LEVEL AT TIME OF FIELD ACTIVITIES
SP	UNIFIED SOIL CLASSIFICATION SYSTEM (ASTM D 2487) GROUP SYMBOL AS DETERMINED BY VISUAL REVIEW AND LABORATORY TESTING ON SELECTED SAMPLES FOR CONFIRMATION OF VISUAL REVIEW.
N	NUMBERS TO THE LEFT OF BORINGS INDICATE SPT VALUE FOR 12 INCHES OF PENETRATION (UNLESS OTHERWISE NOTED).
50/4	NUMBER OF BLOWS FOR 4 INCHES OF PENETRATION
HA	HAND AUGERED TO VERIFY UTILITY CLEARANCE
WH	SPLIT-SPOON SAMPLER ADVANCED UNDER WEIGHT OF ROD AND HAMMER
WR	SPLIT-SPOON SAMPLER ADVANCED UNDER WEIGHT OF ROD
-200	PERCENT PASSING #200 SIEVE
NMC	NATURAL MOISTURE CONTENT (%)
LL	LIQUID LIMIT (%)
PI	PLASTICITY INDEX (%)
NP	NON-PLASTIC
NAVD 88	NORTH AMERICAN VERTICAL DATUM OF 1988
	APPROXIMATE SPT BORING LOCATION
	GROUNDWATER LEVEL ENCOUNTERED DURING FIELD EXPLORATIONS
100	LOSS OF CIRCULATION OF DRILLING FLUID (%)
	CASING

℄ CONST. CENTERLINE CONSTRUCTION OF ESTERO BLVD. (CR 865)

	SAFETY HAMMER	AUTOMATIC HAMMER
GRANULAR MATERIALS- RELATIVE DENSITY	SPT N-VALUE (BLOWS/FT.)	SPT N-VALUE (BLOWS/FT.)
VERY LOOSE	LESS THAN 4	LESS THAN 3
LOOSE	4 to 10	3 to 8
MEDIUM DENSE	10 to 30	8 to 24
DENSE	30 to 50	24 to 40
VERY DENSE	GREATER THAN 50	GREATER THAN 40
SILTS AND CLAYS CONSISTENCY	SPT N-VALUE (BLOWS/FT.)	SPT N-VALUE (BLOWS/FT.)
VERY SOFT	LESS THAN 2	LESS THAN 1
SOFT	2 to 4	1 to 3
FIRM	4 to 8	3 to 6
STIFF	8 to 15	6 to 12
VERY STIFF	15 to 30	12 to 24
HARD	GREATER THAN 30	GREATER THAN 24

BRIDGE NO. 124143

NOTICE: THE OFFICIAL RECORD OF THIS SHEET IS THE ELECTRONIC FILE DIGITALLY SIGNED AND SEALED UNDER RULE 61G15-23.004, F.A.C.

REVISIONS

DATE	BY	DESCRIPTION	DATE	BY	DESCRIPTION

ERICK M. FREDERICK, P.E.
P.E. LICENSE NUMBER 63920
TIERRA, INC.
7351 TEMPLE TERRACE HIGHWAY
TAMPA, FLORIDA 33637

DRAWN BY: BJS
CHECKED BY: TM
DESIGNED BY: BJS
CHECKED BY: EMF

LEE COUNTY PUBLIC WORKS
DEPARTMENT OF TRANSPORTATION

ROAD NO.	COUNTY	COUNTY PROJECT No
CR 865	LEE	CN160002

SHEET TITLE: REPORT OF CORE BORINGS (12 OF 14)
REF. DWG. NO.
PROJECT NAME: ESTERO BLVD. (CR 865) OVER BIG CARLOS PASS
SHEET NO. B1-27

jhanna 2/24/2022 3:15:23 PM c:\pwworkingdir\kca-pw.bentley.com_kca-pw-01\josh hanna\dms00783\B1Boring12.dgn

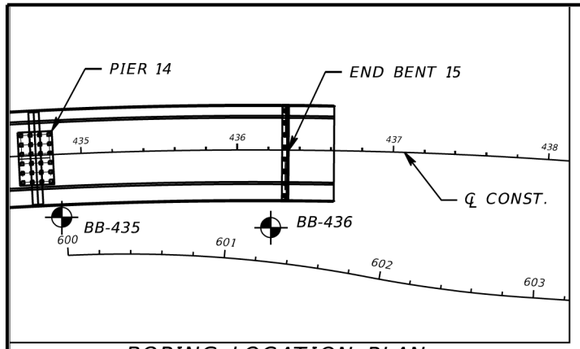

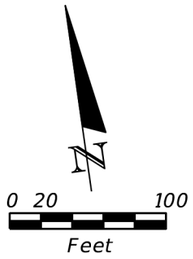

BORING LOCATION PLAN

RECOMMENDED ENVIRONMENTAL CLASSIFICATION:

SUBSTRUCTURE	CONCRETE: EXTREMELY AGGRESSIVE
SUBSTRUCTURE	STEEL: EXTREMELY AGGRESSIVE
SUPERSTRUCTURE	EXTREMELY AGGRESSIVE

NOTE: BORING LOCATIONS AND ELEVATIONS DENOTED WITH AN ASTERISK "*" WERE PROVIDED BY THE PROJECT SURVEYOR. BORING LOCATIONS AND ELEVATIONS NOT DENOTED WITH AN ASTERISK "*" WERE DETERMINED USING PROJECT DESIGN FILES PROVIDED BY KISINGER CAMPO AND ASSOCIATES, CORP. IN CONJUNCTION WITH GPS COORDINATES OBTAINED BY TIERRA, INC. IN THE FIELD AND SHOULD BE CONSIDERED APPROXIMATE.

LEGEND

- GRAY TO BROWN FINE SAND TO SAND WITH SILT, OCCASIONALLY WITH SHELL (SP/SP-SM)
- GRAY TO BROWN SILTY SAND, OCCASIONALLY CEMENTED (SM)
- WEATHERED LIMESTONE/CAPROCK
- GRAY TO GREEN-GRAY TO LIGHT BROWN SILT TO CLAYEY-SILT (ML/MH/ML-CL)
- GRAY TO BROWN SHELLY SAND (SP/SP-SM)
- GRAY TO DARK GRAY INDURATED CLAY (CL/CH)
- GRAY TO DARK GRAY CLAY (CL/CH)
- DARK BROWN ORGANIC SILTY SAND TO PEAT (Pt)
- GRAY TO LIGHT BROWN CLAYEY-SILTY SAND TO CLAYEY SAND (SM-SC/SC)

W	WATER LEVEL AT TIME OF FIELD ACTIVITIES
SP	UNIFIED SOIL CLASSIFICATION SYSTEM (ASTM D 2487) GROUP SYMBOL AS DETERMINED BY VISUAL REVIEW AND LABORATORY TESTING ON SELECTED SAMPLES FOR CONFIRMATION OF VISUAL REVIEW.
N	NUMBERS TO THE LEFT OF BORINGS INDICATE SPT VALUE FOR 12 INCHES OF PENETRATION (UNLESS OTHERWISE NOTED).
50/4	NUMBER OF BLOWS FOR 4 INCHES OF PENETRATION
HA	HAND AUGERED TO VERIFY UTILITY CLEARANCE
WH	SPLIT-SPOON SAMPLER ADVANCED UNDER WEIGHT OF ROD AND HAMMER
WR	SPLIT-SPOON SAMPLER ADVANCED UNDER WEIGHT OF ROD
-200	PERCENT PASSING #200 SIEVE
NMC	NATURAL MOISTURE CONTENT (%)
LL	LIQUID LIMIT (%)
PI	PLASTICITY INDEX (%)
NP	NON-PLASTIC
NAVD 88	NORTH AMERICAN VERTICAL DATUM OF 1988
	APPROXIMATE SPT BORING LOCATION
	GROUNDWATER LEVEL ENCOUNTERED DURING FIELD EXPLORATIONS
100	LOSS OF CIRCULATION OF DRILLING FLUID (%)
	CASING

℄ CONST. CENTERLINE CONSTRUCTION OF ESTERO BLVD. (CR 865)

	SAFETY HAMMER	AUTOMATIC HAMMER
GRANULAR MATERIALS- RELATIVE DENSITY	SPT N-VALUE (BLOWS/FT.)	SPT N-VALUE (BLOWS/FT.)
VERY LOOSE	LESS THAN 4	LESS THAN 3
LOOSE	4 to 10	3 to 8
MEDIUM DENSE	10 to 30	8 to 24
DENSE	30 to 50	24 to 40
VERY DENSE	GREATER THAN 50	GREATER THAN 40
SILTS AND CLAYS CONSISTENCY	SPT N-VALUE (BLOWS/FT.)	SPT N-VALUE (BLOWS/FT.)
VERY SOFT	LESS THAN 2	LESS THAN 1
SOFT	2 to 4	1 to 3
FIRM	4 to 8	3 to 6
STIFF	8 to 15	6 to 12
VERY STIFF	15 to 30	12 to 24
HARD	GREATER THAN 30	GREATER THAN 24

BOR # BB-435
STA. 434+84
REF. ℄ CONST.
OFF. 39' RT.
ELEV. 5.8
DATE 12/3/2019
DRILLER D. STAKELIN
HAMMER AUTOMATIC
RIG D-25

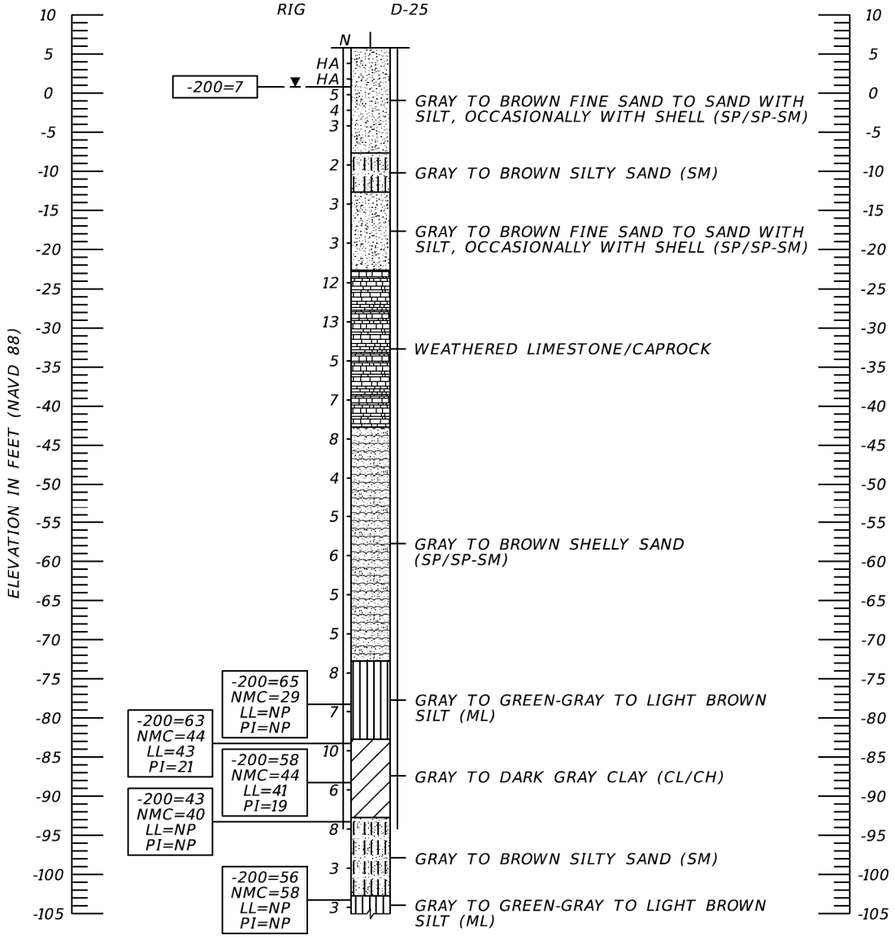

BB-435R (CONTINUED)

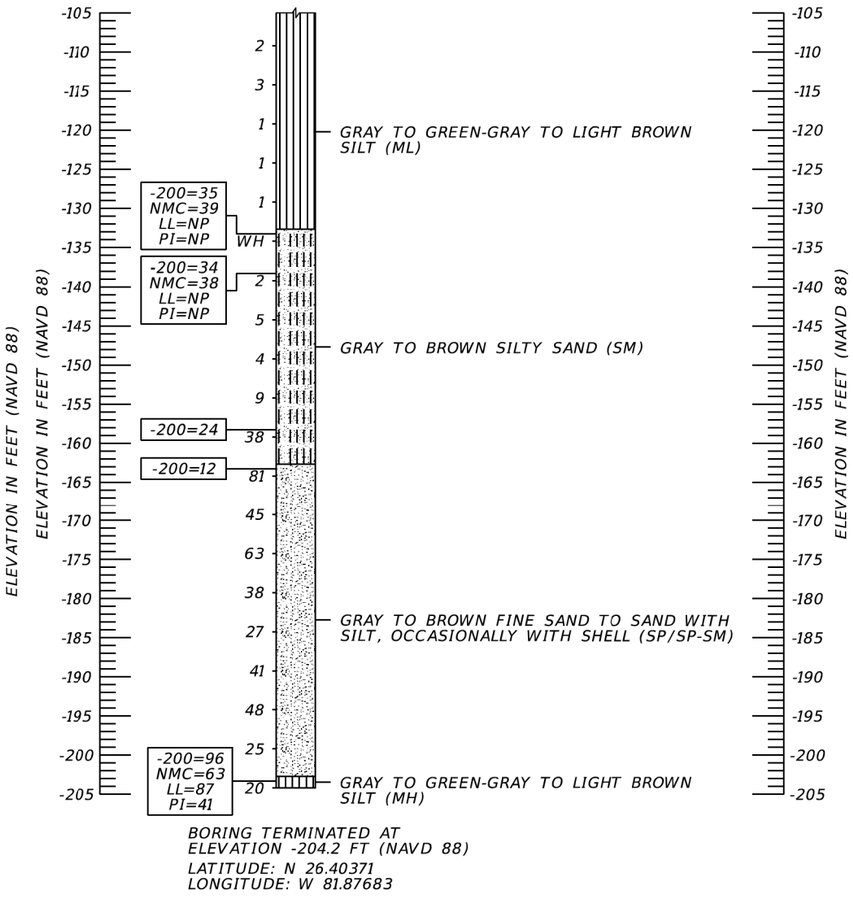

BORING TERMINATED AT ELEVATION -204.2 FT (NAVD 88)
LATITUDE: N 26.40371
LONGITUDE: W 81.87683

BRIDGE NO. 124143

NOTICE: THE OFFICIAL RECORD OF THIS SHEET IS THE ELECTRONIC FILE DIGITALLY SIGNED AND SEALED UNDER RULE 61G15-23.004, F.A.C.

REVISIONS

DATE	BY	DESCRIPTION	DATE	BY	DESCRIPTION

ERICK M. FREDERICK, P.E.
P.E. LICENSE NUMBER 63920
TIERRA, INC.
7351 TEMPLE TERRACE HIGHWAY
TAMPA, FLORIDA 33637

DRAWN BY: BJS
CHECKED BY: TM
DESIGNED BY: BJS
CHECKED BY: EMF

LEE COUNTY PUBLIC WORKS
DEPARTMENT OF TRANSPORTATION

ROAD NO.	COUNTY	COUNTY PROJECT No
CR 865	LEE	CN160002

SHEET TITLE: REPORT OF CORE BORINGS (13 OF 14)
REF. DWG. NO.
PROJECT NAME: ESTERO BLVD. (CR 865) OVER BIG CARLOS PASS
SHEET NO. B1-28

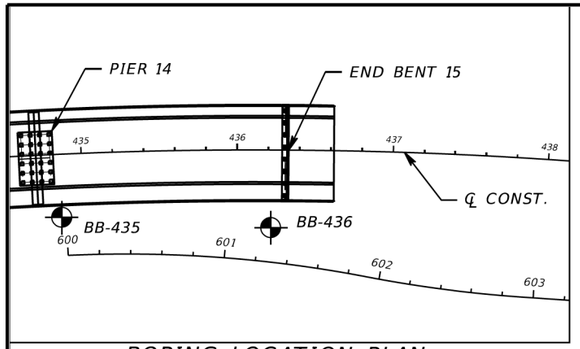

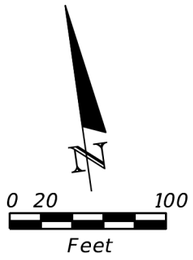

BORING LOCATION PLAN

RECOMMENDED ENVIRONMENTAL CLASSIFICATION:

SUBSTRUCTURE	CONCRETE: EXTREMELY AGGRESSIVE
SUBSTRUCTURE	STEEL: EXTREMELY AGGRESSIVE
SUPERSTRUCTURE	EXTREMELY AGGRESSIVE

NOTE: BORING LOCATIONS AND ELEVATIONS DENOTED WITH AN ASTERISK "*" WERE PROVIDED BY THE PROJECT SURVEYOR. BORING LOCATIONS AND ELEVATIONS NOT DENOTED WITH AN ASTERISK "*" WERE DETERMINED USING PROJECT DESIGN FILES PROVIDED BY KISINGER CAMPO AND ASSOCIATES, CORP. IN CONJUNCTION WITH GPS COORDINATES OBTAINED BY TIERRA, INC. IN THE FIELD AND SHOULD BE CONSIDERED APPROXIMATE.

LEGEND

- GRAY TO BROWN FINE SAND TO SAND WITH SILT, OCCASIONALLY WITH SHELL (SP/SP-SM)
- GRAY TO BROWN SILTY SAND, OCCASIONALLY CEMENTED (SM)
- WEATHERED LIMESTONE/CAPROCK
- GRAY TO GREEN-GRAY TO LIGHT BROWN SILT TO CLAYEY-SILT (ML/MH/ML-CL)
- GRAY TO BROWN SHELLY SAND (SP/SP-SM)
- GRAY TO DARK GRAY INDURATED CLAY (CL/CH)
- GRAY TO DARK GRAY CLAY (CL/CH)
- DARK BROWN ORGANIC SILTY SAND TO PEAT (Pt)
- GRAY TO LIGHT BROWN CLAYEY-SILTY SAND TO CLAYEY SAND (SM-SC/SC)

W	WATER LEVEL AT TIME OF FIELD ACTIVITIES
SP	UNIFIED SOIL CLASSIFICATION SYSTEM (ASTM D 2487) GROUP SYMBOL AS DETERMINED BY VISUAL REVIEW AND LABORATORY TESTING ON SELECTED SAMPLES FOR CONFIRMATION OF VISUAL REVIEW.
N	NUMBERS TO THE LEFT OF BORINGS INDICATE SPT VALUE FOR 12 INCHES OF PENETRATION (UNLESS OTHERWISE NOTED).
50/4	NUMBER OF BLOWS FOR 4 INCHES OF PENETRATION
HA	HAND AUGERED TO VERIFY UTILITY CLEARANCE
WH	SPLIT-SPOON SAMPLER ADVANCED UNDER WEIGHT OF ROD AND HAMMER
WR	SPLIT-SPOON SAMPLER ADVANCED UNDER WEIGHT OF ROD
-200	PERCENT PASSING #200 SIEVE
NMC	NATURAL MOISTURE CONTENT (%)
LL	LIQUID LIMIT (%)
PI	PLASTICITY INDEX (%)
NP	NON-PLASTIC
NAVD 88	NORTH AMERICAN VERTICAL DATUM OF 1988
	APPROXIMATE SPT BORING LOCATION
	GROUNDWATER LEVEL ENCOUNTERED DURING FIELD EXPLORATIONS
100	LOSS OF CIRCULATION OF DRILLING FLUID (%)
	CASING

℄ CONST. CENTERLINE CONSTRUCTION OF ESTERO BLVD. (CR 865)

	SAFETY HAMMER	AUTOMATIC HAMMER
GRANULAR MATERIALS- RELATIVE DENSITY	SPT N-VALUE (BLOWS/FT.)	SPT N-VALUE (BLOWS/FT.)
VERY LOOSE	LESS THAN 4	LESS THAN 3
LOOSE	4 to 10	3 to 8
MEDIUM DENSE	10 to 30	8 to 24
DENSE	30 to 50	24 to 40
VERY DENSE	GREATER THAN 50	GREATER THAN 40
SILTS AND CLAYS CONSISTENCY	SPT N-VALUE (BLOWS/FT.)	SPT N-VALUE (BLOWS/FT.)
VERY SOFT	LESS THAN 2	LESS THAN 1
SOFT	2 to 4	1 to 3
FIRM	4 to 8	3 to 6
STIFF	8 to 15	6 to 12
VERY STIFF	15 to 30	12 to 24
HARD	GREATER THAN 30	GREATER THAN 24

BOR # BB-436*
STA. 436+19
REF. ℄ CONST.
OFF. 48' RT.
ELEV. 3.9
DATE 12/10/2019
DRILLER D. STAKELIN
HAMMER AUTOMATIC
RIG D-25

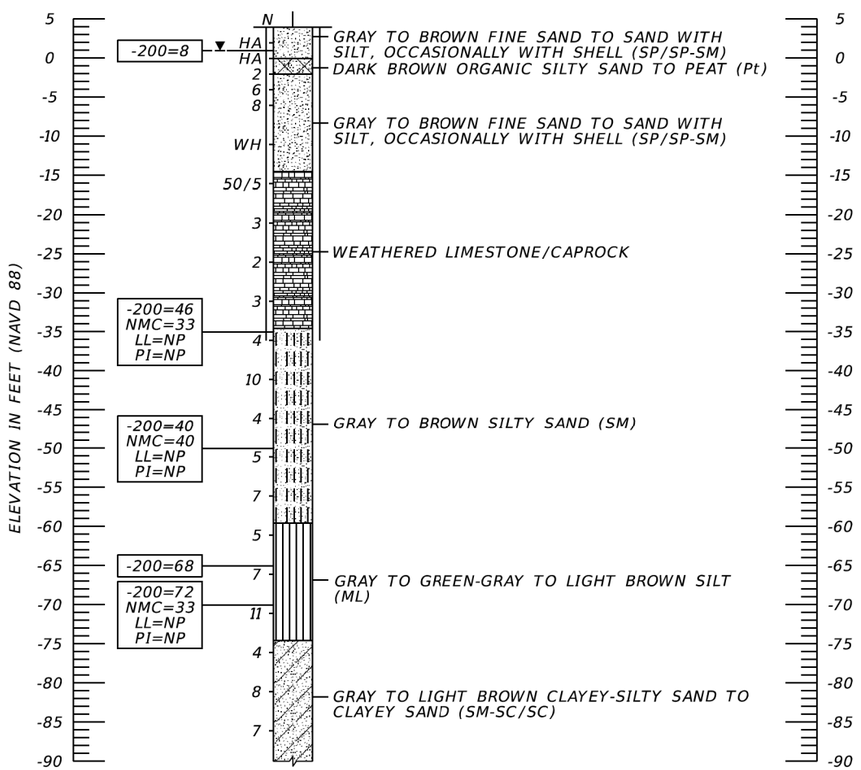

BB-436 (CONTINUED)

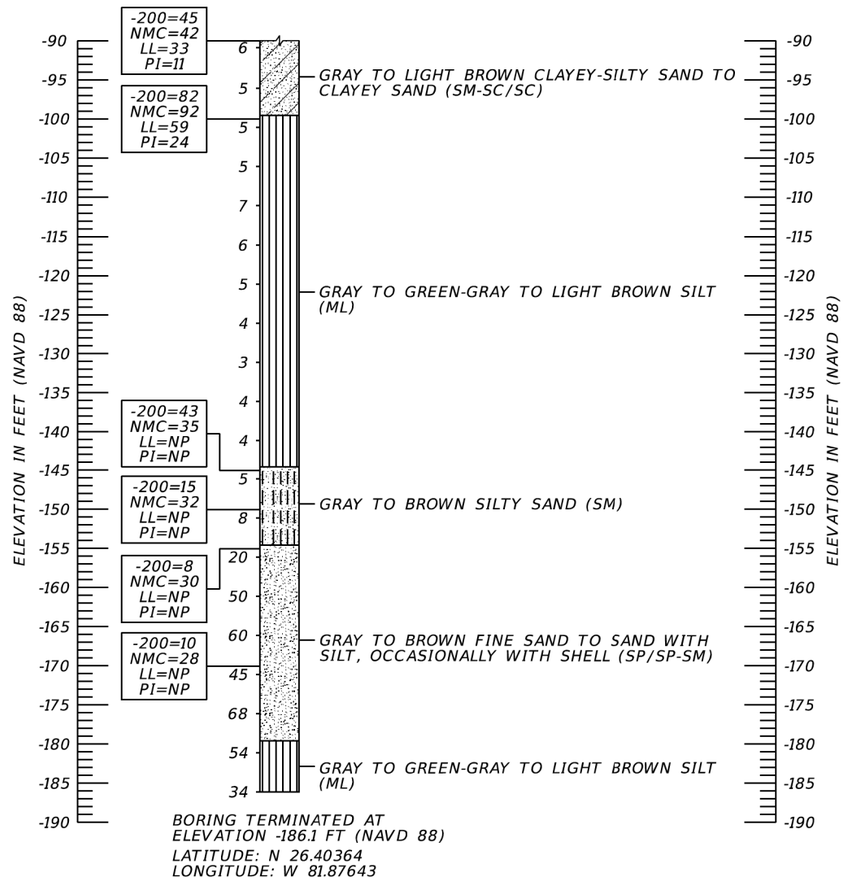

BORING TERMINATED AT ELEVATION -186.1 FT (NAVD 88)
LATITUDE: N 26.40364
LONGITUDE: W 81.87643

BRIDGE NO. 124143

NOTICE: THE OFFICIAL RECORD OF THIS SHEET IS THE ELECTRONIC FILE DIGITALLY SIGNED AND SEALED UNDER RULE 61G15-23.004, F.A.C.

REVISIONS

DATE	BY	DESCRIPTION	DATE	BY	DESCRIPTION

ERICK M. FREDERICK, P.E.
P.E. LICENSE NUMBER 63920
TIERRA, INC.
7351 TEMPLE TERRACE HIGHWAY
TAMPA, FLORIDA 33637

DRAWN BY: BJS
CHECKED BY: TM
DESIGNED BY: BJS
CHECKED BY: EMF

LEE COUNTY PUBLIC WORKS
DEPARTMENT OF TRANSPORTATION

ROAD NO.	COUNTY	COUNTY PROJECT No
CR 865	LEE	CN160002

SHEET TITLE: REPORT OF CORE BORINGS (14 OF 14)
REF. DWG. NO.
PROJECT NAME: ESTERO BLVD. (CR 865) OVER BIG CARLOS PASS
SHEET NO. B1-29

jhanna 2/24/2022 3:15:49 PM c:\pwworkingdir\kca-pw.bentley.com_kca-pw-01\josh hanna\dms00783\B1Boring14.dgn

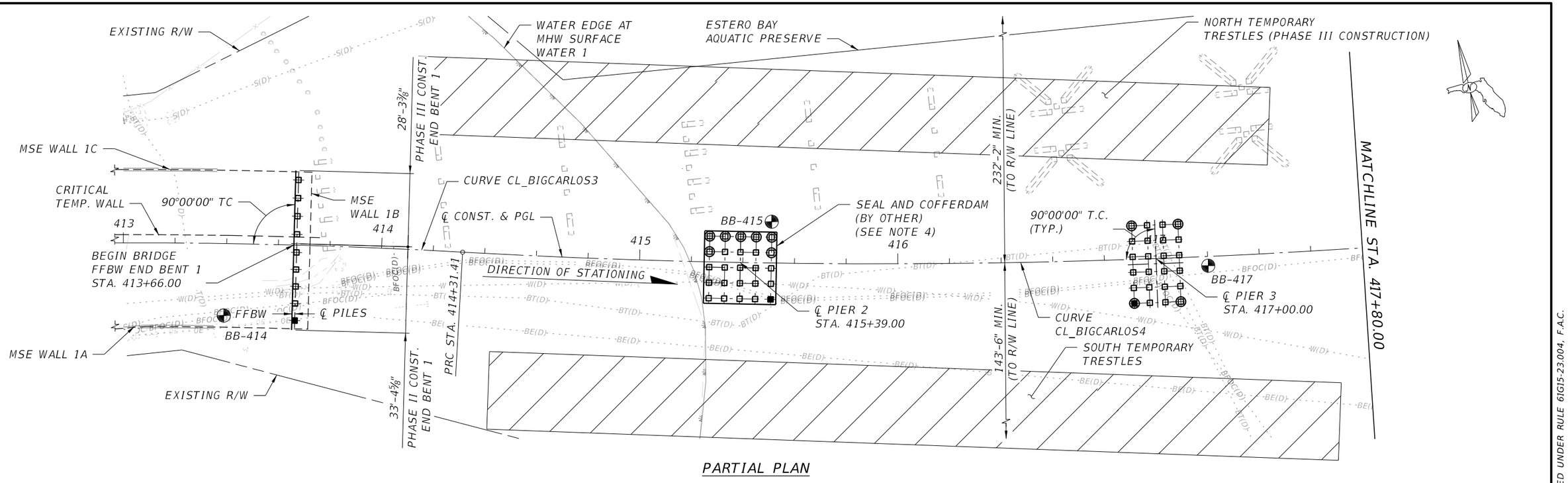

PARTIAL PLAN

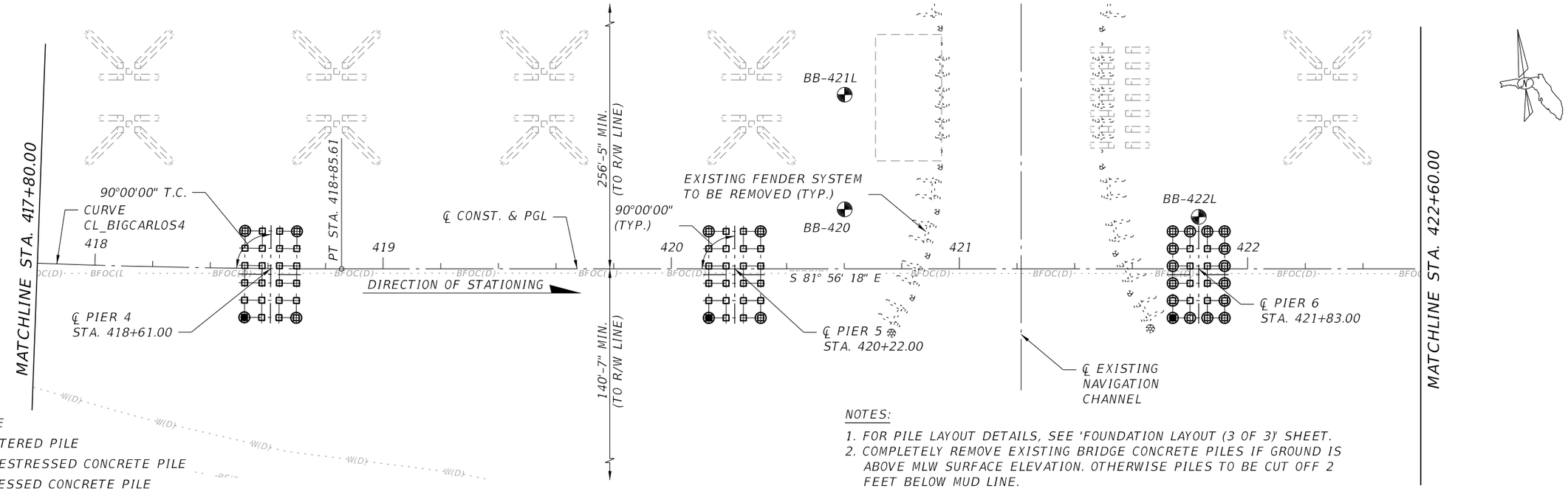

PARTIAL PLAN

LEGEND

- 20" EXISTING PILE
- 20" EXISTING BATTERED PILE
- PROPOSED 24" PRESTRESSED CONCRETE PILE
- TEST 24" PRESTRESSED CONCRETE PILE
- PROPOSED TENSION PILE
- DENOTES APPROXIMATE LOCATION OF CORE BORING

NOTES:

1. FOR PILE LAYOUT DETAILS, SEE 'FOUNDATION LAYOUT (3 OF 3)' SHEET.
2. COMPLETELY REMOVE EXISTING BRIDGE CONCRETE PILES IF GROUND IS ABOVE MLW SURFACE ELEVATION. OTHERWISE PILES TO BE CUT OFF 2 FEET BELOW MUD LINE.
3. FOR CURVE DATA SEE 'PLAN AND ELEVATION (6 OF 6)' SHEET.
4. SUBMIT SIGNED AND SEALED DRAWINGS FOR SEAL AND SHOP DRAWINGS FOR COFFERDAM TO THE ENGINEER FOR APPROVAL.

BRIDGE NO. 124143

REVISIONS					
DATE	BY	DESCRIPTION	DATE	BY	DESCRIPTION

Kisinger Campo & Associates Corp.
201 N. Franklin Street
Suite 400
Tampa, FL 33602
Alfredo Jose Layrisse, PE No. 75610

DRAWN BY:	ARF 04-21
CHECKED BY:	JHJ 04-21
DESIGNED BY:	SKB 10-19
CHECKED BY:	PDM 03-20

LEE COUNTY PUBLIC WORKS DEPARTMENT OF TRANSPORTATION

ROAD NO.	COUNTY	COUNTY PROJECT No
CR 865	LEE	CN160002

SHEET TITLE: FOUNDATION LAYOUT (1 OF 3)

REF. DWG. NO.:

PROJECT NAME: ESTERO BLVD. (CR 865) OVER BIG CARLOS PASS

SHEET NO.: B1-30

NOTICE: THE OFFICIAL RECORD OF THIS SHEET IS THE ELECTRONIC FILE DIGITALLY SIGNED AND SEALED UNDER RULE 61G15-23.004, F.A.C.

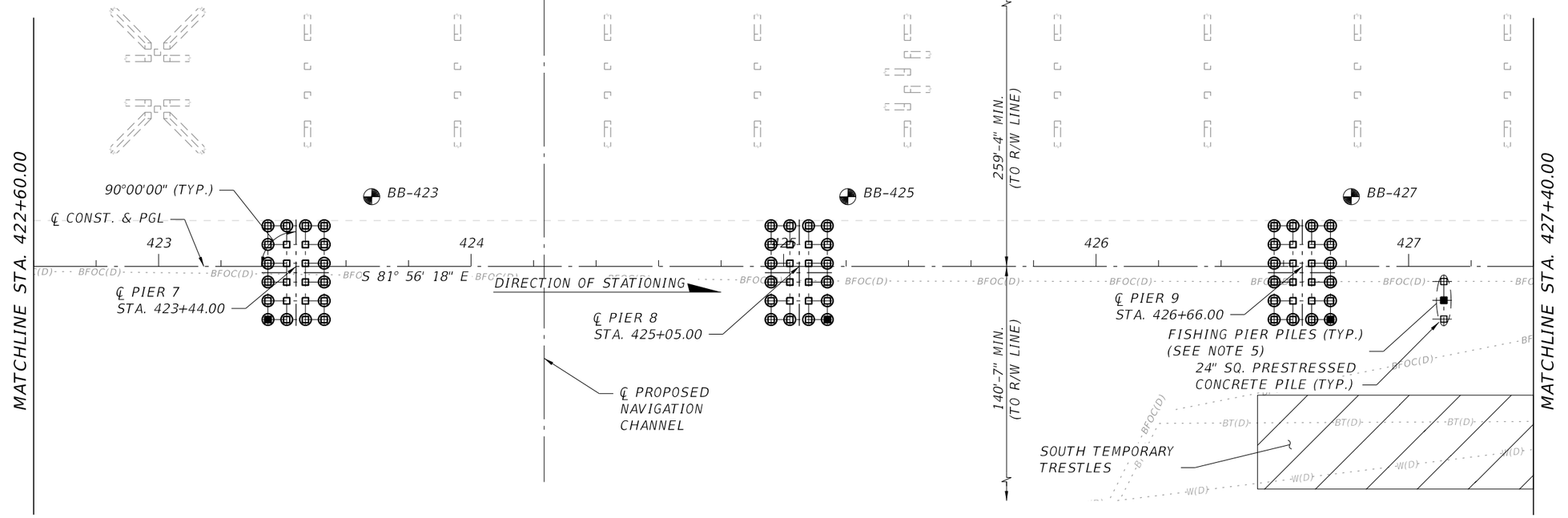

PARTIAL PLAN

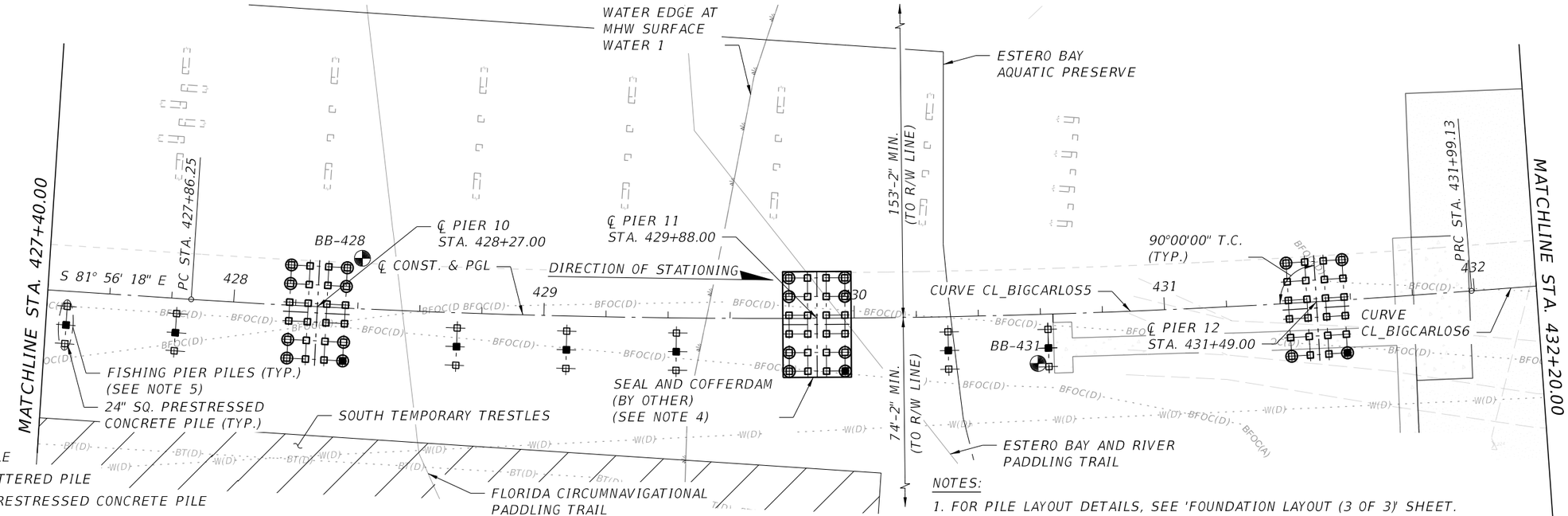

PARTIAL PLAN

LEGEND

- 20" EXISTING PILE
- 20" EXISTING BATTERED PILE
- PROPOSED 24" PRESTRESSED CONCRETE PILE
- TEST 24" PRESTRESSED CONCRETE PILE
- PROPOSED TENSION PILE
- DENOTES APPROXIMATE LOCATION OF CORE BORING

NOTES:

1. FOR PILE LAYOUT DETAILS, SEE 'FOUNDATION LAYOUT (3 OF 3)' SHEET.
2. EXISTING BRIDGE CONCRETE PILES TO BE CUTOFF 2 FEET BELOW MUDLINE.
3. FOR CURVE DATA SEE 'PLAN AND ELEVATION (6 OF 6)' SHEET.
4. SUBMIT SEAL AND COFFERDAM SHOP DRAWINGS TO EOR FOR APPROVAL.
5. FOR FISHING PIER PILE LAYOUT AND DETAILS SEE FISHING PIER PLANS.

BRIDGE NO. 124143

REVISIONS

DATE	BY	DESCRIPTION	DATE	BY	DESCRIPTION

Kisinger Campo & Associates Corp.
201 N. Franklin Street
Suite 400
Tampa, FL 33602
Alfredo Jose Layrisse, PE No. 75610

DRAWN BY:	CHECKED BY:	DESIGNED BY:	CHECKED BY:
ARF 04-21	JHJ 04-21	SKB 10-19	PDM 03-20

LEE COUNTY PUBLIC WORKS
DEPARTMENT OF TRANSPORTATION

ROAD NO.	COUNTY	COUNTY PROJECT No
CR 865	LEE	CN160002

SHEET TITLE: FOUNDATION LAYOUT (2 OF 3)

REF. DWG. NO.:

PROJECT NAME: ESTERO BLVD. (CR 865) OVER BIG CARLOS PASS

SHEET NO.: B1-31

NOTICE: THE OFFICIAL RECORD OF THIS SHEET IS THE ELECTRONIC FILE DIGITALLY SIGNED AND SEALED UNDER RULE 61G15-23.004, F.A.C.

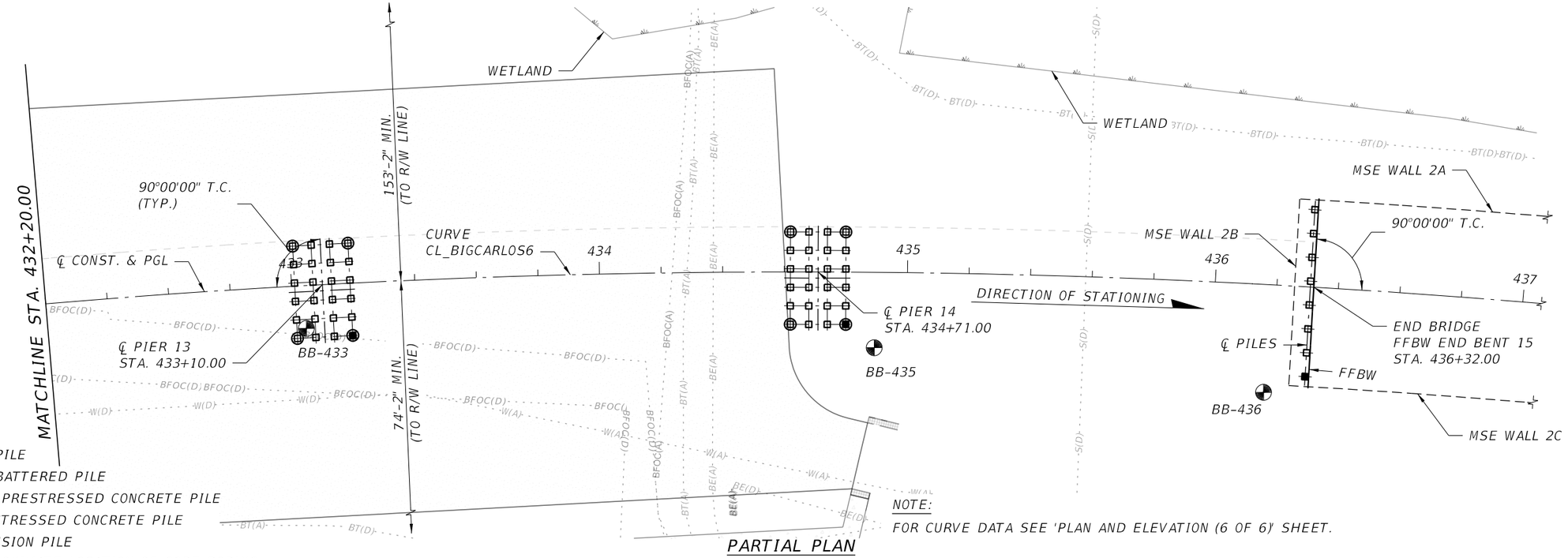

PARTIAL PLAN

NOTE:
FOR CURVE DATA SEE 'PLAN AND ELEVATION (6 OF 6)' SHEET.

LEGEND
- 20" EXISTING PILE
- 20" EXISTING BATTERED PILE
- PROPOSED 24" PRESTRESSED CONCRETE PILE
- TEST 24" PRESTRESSED CONCRETE PILE
- PROPOSED TENSION PILE
- DENOTES APPROXIMATE LOCATION OF CORE BORING

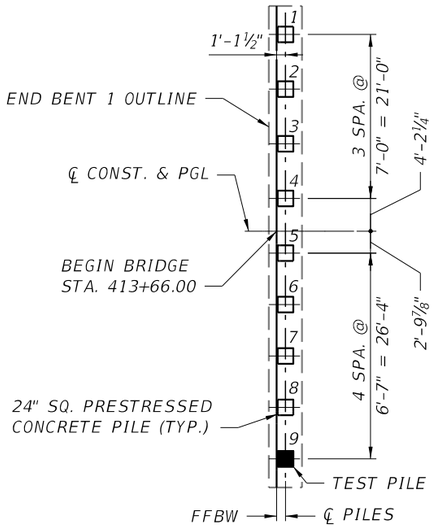

END BENT 1

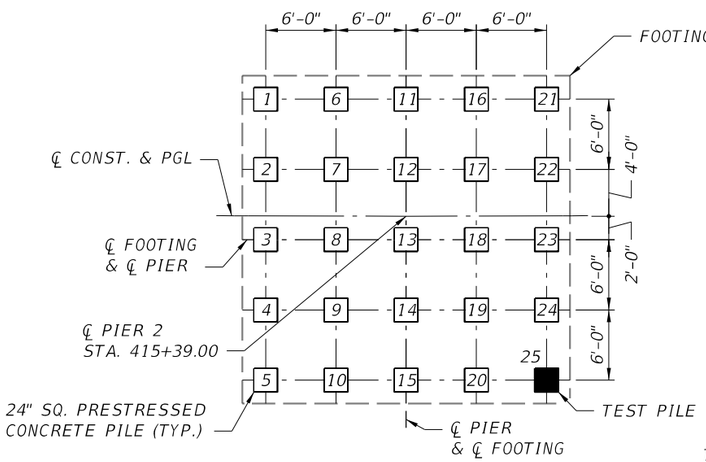

PIER 2

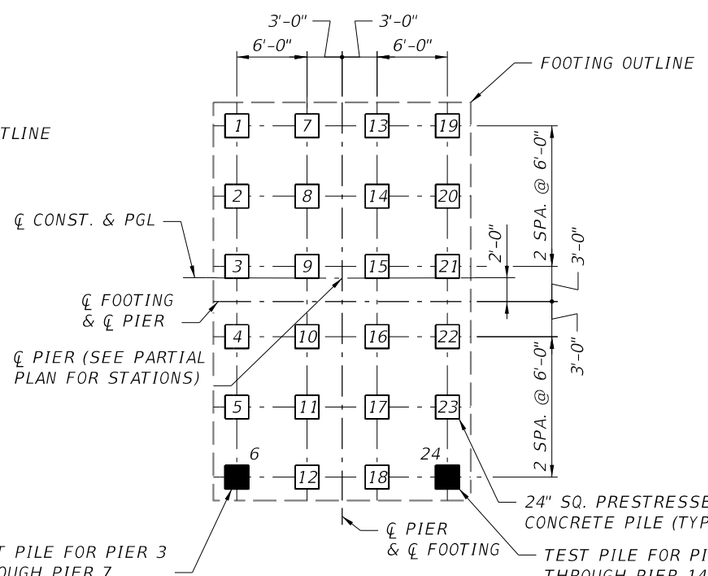

PIERS 3 - 14

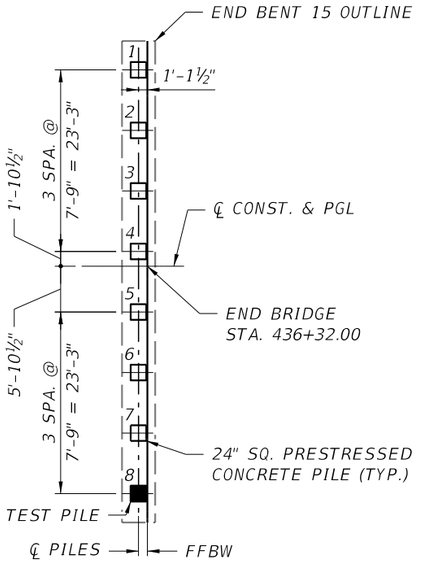

END BENT 15

LEGEND
- PROPOSED 24" PRESTRESSED CONCRETE PILE
- TEST 24" PRESTRESSED CONCRETE PILE

NOTE:
TENSION PILES NOT SHOWN. SEE PARTIAL PLAN VIEWS & SHEETS B1-50 THRU B1-54 FOR TENSION PILE LOCATIONS.

BRIDGE NO. 124143

NOTICE: THE OFFICIAL RECORD OF THIS SHEET IS THE ELECTRONIC FILE DIGITALLY SIGNED AND SEALED UNDER RULE 61G15-23.004, F.A.C.

REVISIONS

DATE	BY	DESCRIPTION	DATE	BY	DESCRIPTION

Kisinger Campo & Associates Corp.
201 N. Franklin Street
Suite 400
Tampa, FL 33602
Alfredo Jose Layrisse, PE No. 75610

DRAWN BY:	ARF 04-21
CHECKED BY:	JHJ 04-21
DESIGNED BY:	SKB 10-19
CHECKED BY:	PDM 03-20

LEE COUNTY PUBLIC WORKS DEPARTMENT OF TRANSPORTATION

ROAD NO.	COUNTY	COUNTY PROJECT No
CR 865	LEE	CN160002

SHEET TITLE: FOUNDATION LAYOUT (3 OF 3)

REF. DWG. NO.:

PROJECT NAME: ESTERO BLVD. (CR 865) OVER BIG CARLOS PASS

SHEET NO.: B1-32

jhanna 2/24/2022 3:16:11 PM c:\pwworkingdir\kca-pw.bentley.com_kca-pw-01\josh hanna\dms00783\B1FoundLay03.dgn

PILE DATA TABLE

INSTALLATION CRITERIA									DESIGN CRITERIA								
PIER or BENT NUMBER	PILE SIZE (in.)	NOMINAL BEARING RESISTANCE (tons)	NOMINAL UPLIFT RESISTANCE (tons)	MINIMUM TIP ELEVATION (ft.)	TEST PILE LENGTH (ft.)	REQUIRED JET ELEVATION (ft.)	REQUIRED PREFORM ELEVATION (ft.)	MINIMUM PILE SPLICE ELEVATION (ft.) (SEE NOTE 5)	FACTORED DESIGN LOAD (tons)	FACTORED DESIGN UPLIFT LOAD (tons)	DOWN DRAG (tons)	TOTAL SCOUR RESISTANCE (tons)	NET SCOUR RESISTANCE (tons)	100-YEAR SCOUR ELEVATION (ft.)	Ø COMPRESSION	Ø UPLIFT	PILE CUT-OFF ELEVATIONS
END BENT 1	24	410	N/A	-40	160	N/A	-40	N/A	266	N/A	N/A	N/A	N/A	N/A	0.65	0.55	10.9
PIER 2	24	333	160	-113	140	N/A	-35	-75.0	216	88	N/A	27	0	-22	0.65	0.55	*
PIER 3	24	304	N/A	-55	155	N/A	-38	-80.5	197	N/A	N/A	2	0	-25	0.65	0.55	*
PIER 4	24	294	N/A	-55	155	N/A	-48	-81.0	191	N/A	N/A	17	0	-25	0.65	0.55	*
PIER 5	24	311	40	-54	155	N/A	-48	-78.5	202	22	N/A	3	0	-19	0.65	0.55	*
PIER 6	24	353	90	-53	110	N/A	-48	N/A	229	49	N/A	14	0	-23	0.65	0.55	*
PIER 7	24	365	68	-94	190	N/A	-53	-100.0	237	37	N/A	35	0	-27	0.65	0.55	*
PIER 8	24	344	122	-110	165	N/A	-53	-89.5	223	67	N/A	45	0	-32	0.65	0.55	*
PIER 9	24	367	142	-123	175	N/A	-48	-93.0	238	78	N/A	24	0	-27	0.65	0.55	*
PIER 10	24	316	55	-71	180	N/A	-43	-90.5	205	30	N/A	33	0	-22	0.65	0.55	*
PIER 11	24	324	79	-73	135	N/A	-63	-70.5	210	43	N/A	29	0	-24	0.65	0.55	*
PIER 12	24	311	13	-59	175	N/A	-63	-89.5	202	7	N/A	42	0	-22	0.65	0.55	*
PIER 13	24	280	N/A	-51	170	N/A	-38	-85.5	182	N/A	N/A	24	0	-16	0.65	0.55	*
PIER 14	24	284	N/A	-49	175	N/A	-43	-86.0	184	N/A	N/A	9	0	-14	0.65	0.55	*
END BENT 15	24	400	N/A	-35	195	N/A	-35	N/A	253	N/A	7	N/A	N/A	N/A	0.65	0.55	14.2

$$\frac{\text{Factored Design Load + Net Scour Resistance + Down Drag}}{\text{Ø}} \leq \text{Nominal Bearing Resistance}$$

UPLIFT RESISTANCE – The ultimate side friction capacity that must be obtained below the 100 year scour elevation to resist pullout of the pile (Specify only when design requires uplift capacity).

TOTAL SCOUR RESISTANCE – An estimate of the ultimate static side friction resistance provided by the scourable soil.

NET SCOUR RESISTANCE – An estimate of the ultimate static side friction resistance provided by the soil from the required preformed or jetting elevation to the scour elevation.

100-YEAR SCOUR ELEVATION – Estimated elevation of scour due to the 100 year storm event.

The contractor should anticipate the use of specialized equipment and/or methods including, but not limited to, core barrels, rock augers, punches, drill bits, etc. to complete preforming. If drilling equipment with a tapered end is used to construct the preformed pile holes, the maximum diameter of the drilling equipment has to reach the required preformed elevation.

Do not advance preformed pile holes deeper than the preformed elevations shown in the table without approval of the engineer. If actual preforming elevations differ from those shown in the table, the engineer shall determine the required driving resistance.

* FOR PILE CUT-OFF ELEVATIONS, SEE 'FOOTING CAP REINFORCING' SHEETS.

PILE INSTALLATION NOTES:

1. The portion of the end bent piles exposed above the existing ground line and below the bottom of the concrete cap shall be wrapped with polyethylene sheeting to minimize downdrag. Refer to section 459 of the fdot specifications.
2. Minimum tip elevation at the intermediate Pier Nos. 3, 4, 12, 13 and 14 is required for lateral stability. Minimum tip elevation at Pier Nos. 2, 7, 8, 9, 10 and 11 are required for uplift resistance. Minimum tip elevation at the end bents is required to ensure penetration through the dense limestone substratum.
3. Contractor to verify location of all utilities prior to any pile installation activities.
4. When a required jetting elevation is shown, the jet shall be lowered to the elevation and continue to operate at this elevation until the pile driving is completed. If jetting or preforming elevations differ from those shown on the table, the Engineer shall be responsible for determination of the required driving resistance.
5. No jetting will be allowed without the approval of the Engineer.
6. The Contractor should not anticipate being allowed to jet piles below the 100-year scour elevation or required jet elevation, whichever is deeper.
7. For pile groups, pile driving is to commence at the center of the group and proceed outward.
8. Fullfill requirements of section 455-7.8 for pre-planned splices
9. The soil conditions encountered within the borings are susceptible to pile rebound.
10. Pile rebound potential should be considered during pile hammer selection. Anticipate set-checks and re-drives during pile driving operations to achieve the required nominal bearing resistance. Anticipate set-checks and re-drives when developing the pile driving schedule.

NOTES:

1. MINIMUM BAR SIZE IS #8
2. SEE INDEX 455-001.
3. SHIFT BAR SLIGHTLY AS REQUIRED TO CLEAR STRANDS LOCATED AT CENTERLINE OF THE PILE FACE.
4. UTILIZE PRE-APPROVED ADHESIVE BONDING MATERIAL SYSTEM. COMPLY WITH SPECIFICATIONS 937 AND 416.
5. WHEN REQUIRED, SPLICE LOCATION TO BE POSITIONED BELOW DENOTED ELEVATION. ALL SPLICES ARE TO BE MECHANICAL.

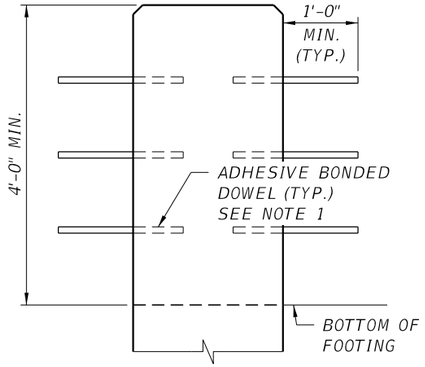

ELEVATION - INTERIOR OR EDGE PILE

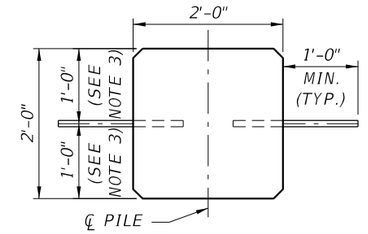

PLAN - INTERIOR OR EDGE PILE

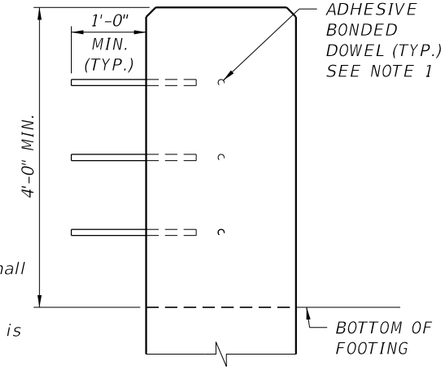

ELEVATION - CORNER PILE

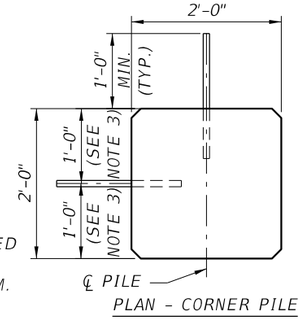

PLAN - CORNER PILE

BRIDGE NO. 124143

NOTICE: THE OFFICIAL RECORD OF THIS SHEET IS THE ELECTRONIC FILE DIGITALLY SIGNED AND SEALED UNDER RULE 61G15-23.004, F.A.C.

REVISIONS					
DATE	BY	DESCRIPTION	DATE	BY	DESCRIPTION

Kisinger Campo & Associates Corp.
201 N. Franklin Street
Suite 400
Tampa, FL 33602
Alfredo Jose Layrisse, PE No. 75610

DRAWN BY:	CHECKED BY:	DESIGNED BY:	CHECKED BY:
SKB 04-21	DAA 04-21	SKB 04-21	DAA 04-21

LEE COUNTY PUBLIC WORKS
DEPARTMENT OF TRANSPORTATION

ROAD NO.	COUNTY	COUNTY PROJECT No
CR 865	LEE	CN160002

SHEET TITLE: PILE DATA TABLE

REF. DWG. NO.

PROJECT NAME: ESTERO BLVD. (CR 865) OVER BIG CARLOS PASS

SHEET NO. B1-33

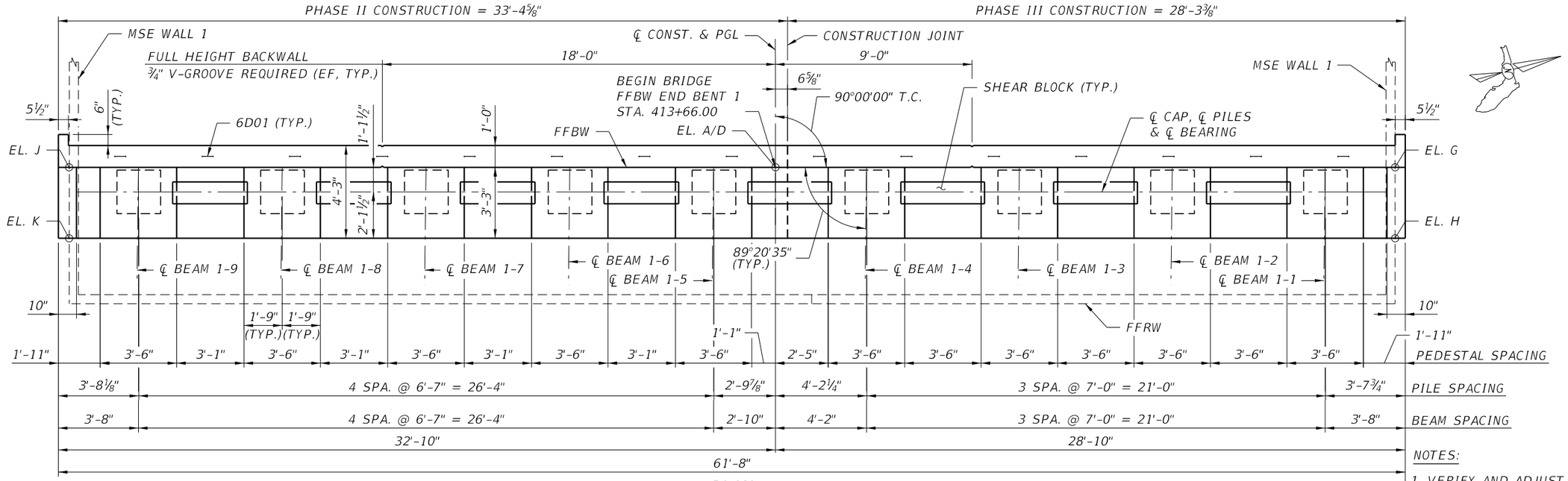

PLAN

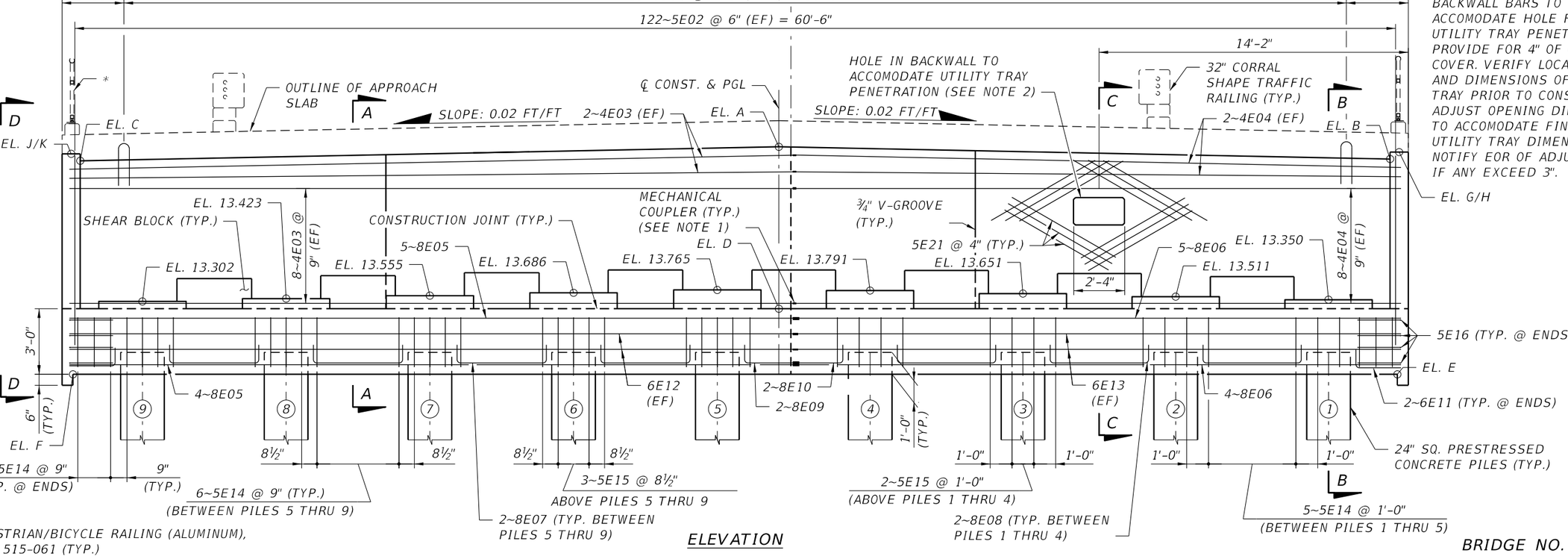

ELEVATION

* 42" BRIDGE PEDESTRIAN/BICYCLE RAILING (ALUMINUM), SCHEME 2, INDEX 515-061 (TYP.)

TABLE OF ELEV. END BENT 1	
POINT	ELEV.
A	20.341
B	19.764
C	19.684
D	12.930
E	9.930
F	9.930
G	20.002
H	20.164
J	19.922
K	20.084

NOTES:

1. VERIFY AND ADJUST BAR LENGTH DEPENDING ON COUPLER TYPE USED.
2. FIELD CUT AND BEND BACKWALL BARS TO ACCOMODATE HOLE FOR UTILITY TRAY PENETRATION. PROVIDE FOR 4" OF CLEAR COVER. VERIFY LOCATION AND DIMENSIONS OF UTILITY TRAY PRIOR TO CONSTRUCTION. ADJUST OPENING DIMENSIONS TO ACCOMODATE FINAL UTILITY TRAY DIMENSIONS. NOTIFY EOR OF ADJUSTMENTS IF ANY EXCEED 3".

BRIDGE NO. 124143

NOTICE: THE OFFICIAL RECORD OF THIS SHEET IS THE ELECTRONIC FILE DIGITALLY SIGNED AND SEALED UNDER RULE 61G15-23.004, F.A.C.

REVISIONS

DATE	BY	DESCRIPTION	DATE	BY	DESCRIPTION

Kisinger Campo & Associates Corp.
201 N. Franklin Street
Suite 400
Tampa, FL 33602
Alfredo Jose Layrisse, PE No. 75610

DRAWN BY: ARF 04-20
CHECKED BY: JHJ 03-21
DESIGNED BY: JHJ 04-20
CHECKED BY: SKB 04-20

LEE COUNTY PUBLIC WORKS DEPARTMENT OF TRANSPORTATION

ROAD NO.	COUNTY	COUNTY PROJECT No
CR 865	LEE	CN160002

SHEET TITLE: END BENT 1

REF. DWG. NO.:

PROJECT NAME: ESTERO BLVD. (CR 865) OVER BIG CARLOS PASS

SHEET NO.: B1-34

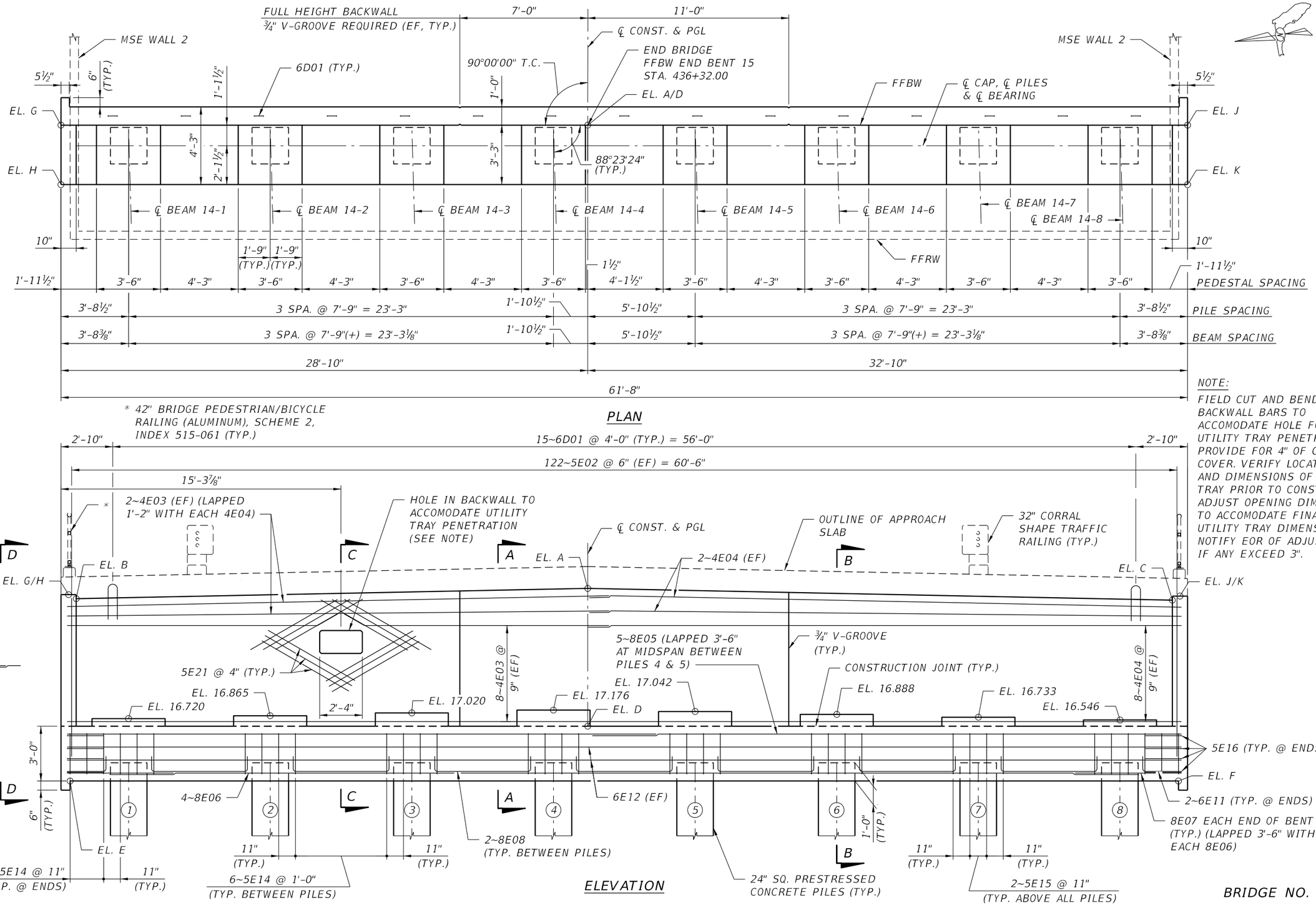

TABLE OF ELEV. END BENT 15	
POINT	ELEV.
A	23.700
B	23.123
C	23.043
D	16.170
E	13.170
F	13.170
G	23.361
H	23.523
J	23.281
K	23.443

LEGEND

LAP BARS

NOTICE: THE OFFICIAL RECORD OF THIS SHEET IS THE ELECTRONIC FILE DIGITALLY SIGNED AND SEALED UNDER RULE 61G15-23.004, F.A.C.

REVISIONS

DATE	BY	DESCRIPTION	DATE	BY	DESCRIPTION

Kisinger Campo & Associates Corp.
201 N. Franklin Street
Suite 400
Tampa, FL 33602
Alfredo Jose Layrisse, PE No. 75610

DRAWN BY:	CHECKED BY:	DESIGNED BY:	CHECKED BY:
ARF 04-20	JHJ 03-21	JHJ 04-20	SKB 04-20

LEE COUNTY PUBLIC WORKS DEPARTMENT OF TRANSPORTATION

ROAD NO.	COUNTY	COUNTY PROJECT No
CR 865	LEE	CN160002

SHEET TITLE: END BENT 15

REF. DWG. NO.:

PROJECT NAME: ESTERO BLVD. (CR 865) OVER BIG CARLOS PASS

SHEET NO.: B1-35

jhanna 2/24/2022 3:16:20 PM c:\pwworkingdir\kca-pw.bentley.com_kca-pw-01\josh hanna\dms00783\B1EndBent02.dgn

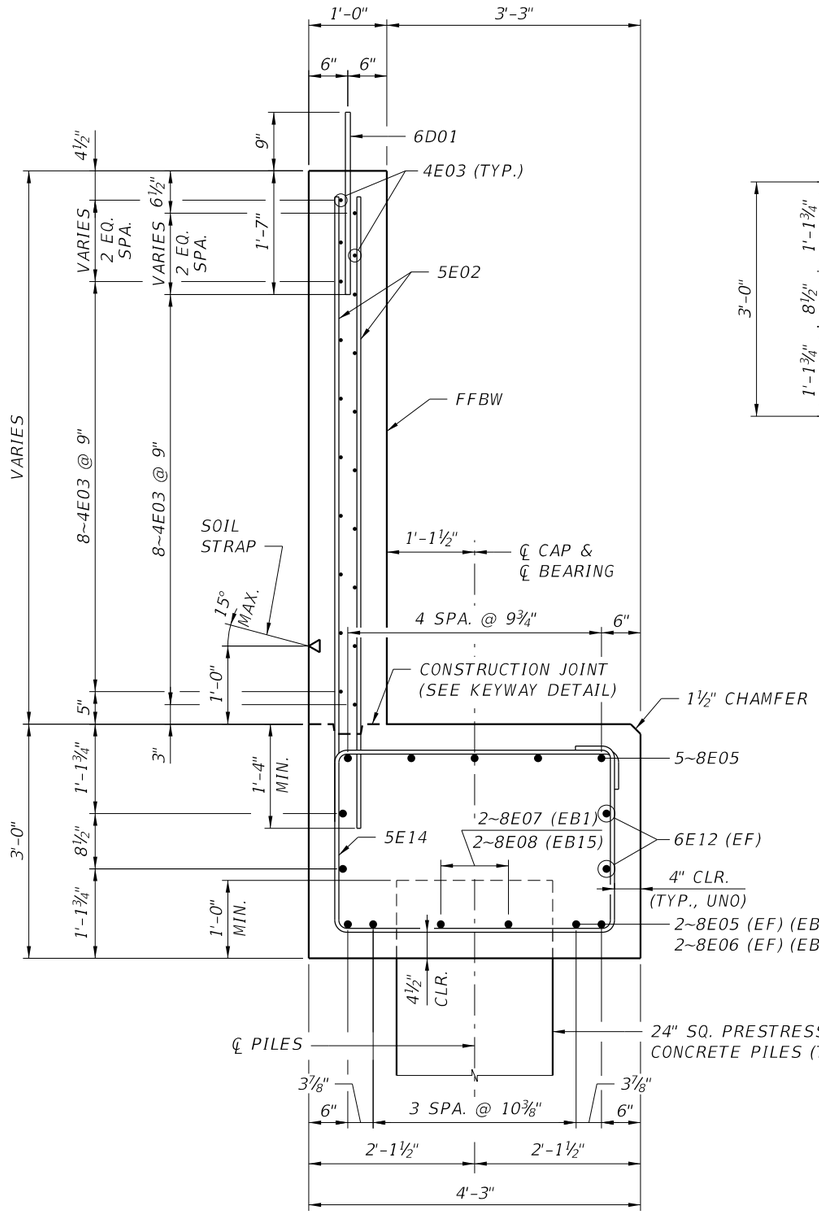

SECTION A-A

(PEDESTAL AND SHEAR BLOCK NOT SHOWN FOR CLARITY)

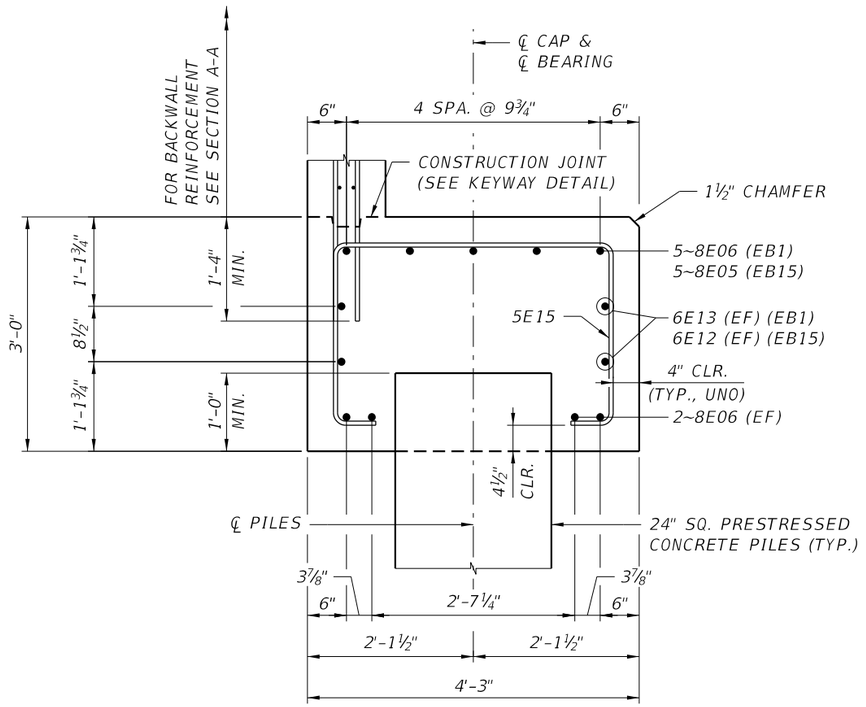

SECTION B-B

(PEDESTAL NOT SHOWN FOR CLARITY)

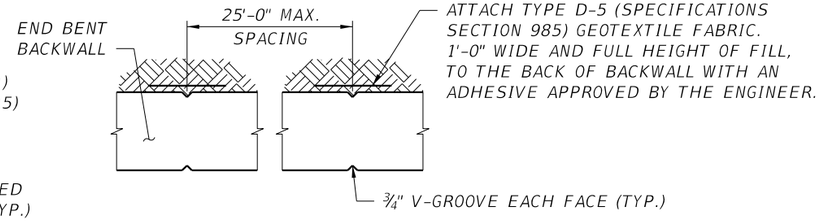

V-GROOVE DETAIL

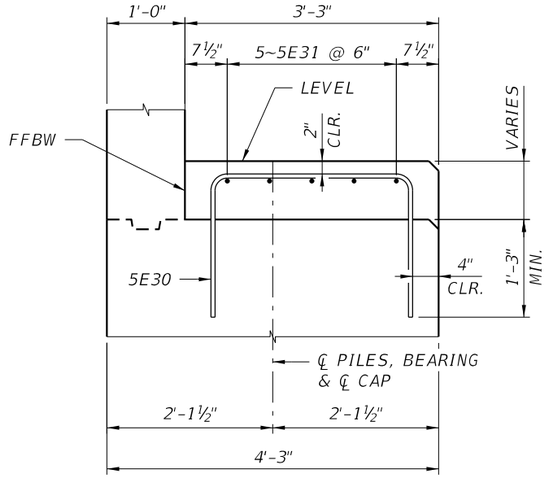

PEDESTAL REINFORCEMENT - SECTION

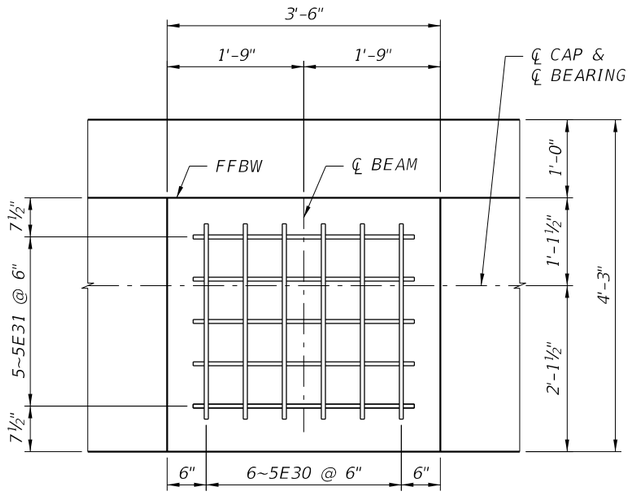

PEDESTAL REINFORCEMENT - PLAN

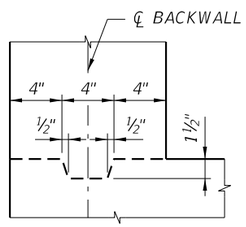

KEYWAY DETAIL

NOTE:

SOIL REINFORCEMENT STRAPS ARE TO RESIST A LATERAL FORCE OF 6.39 KIPS PER FOOT OF BACKWALL (SERVICE) AND 8.93 KIPS PER FOOT OF BACKWALL (FACTORED). THE SOIL REINFORCEMENT ATTACHED TO THE BACKWALL SHALL BE DESIGNED BY A SPECIALTY ENGINEER FOR THE SERVICE AND FACTORED LOADS USING THE DESIGN CRITERIA FOR PERMANENT MSE WALL. COST OF FURNISHING AND INSTALLING THE SOIL REINFORCEMENT IS CONSIDERED INCIDENTAL TO THE COST OF THE END BENT. SUBMIT SIGNED AND SEALED DRAWINGS PREPARED BY A FLORIDA PROFESSIONAL ENGINEER TO THE ENGINEER FOR APPROVAL.

BRIDGE NO. 124143

NOTICE: THE OFFICIAL RECORD OF THIS SHEET IS THE ELECTRONIC FILE DIGITALLY SIGNED AND SEALED UNDER RULE 61G15-23.004, F.A.C.

REVISIONS

DATE	BY	DESCRIPTION	DATE	BY	DESCRIPTION

Kisinger Campo & Associates Corp.
201 N. Franklin Street
Suite 400
Tampa, FL 33602
Alfredo Jose Layrisse, PE No. 75610

DRAWN BY: ARF 04-20
CHECKED BY: JHJ 04-21
DESIGNED BY: JHJ 04-20
CHECKED BY: SKB 04-20

LEE COUNTY PUBLIC WORKS DEPARTMENT OF TRANSPORTATION

ROAD NO.	COUNTY	COUNTY PROJECT No
CR 865	LEE	CN160002

SHEET TITLE: END BENT DETAILS (1 OF 3)

REF. DWG. NO.:

PROJECT NAME: ESTERO BLVD. (CR 865) OVER BIG CARLOS PASS

SHEET NO.: B1-36

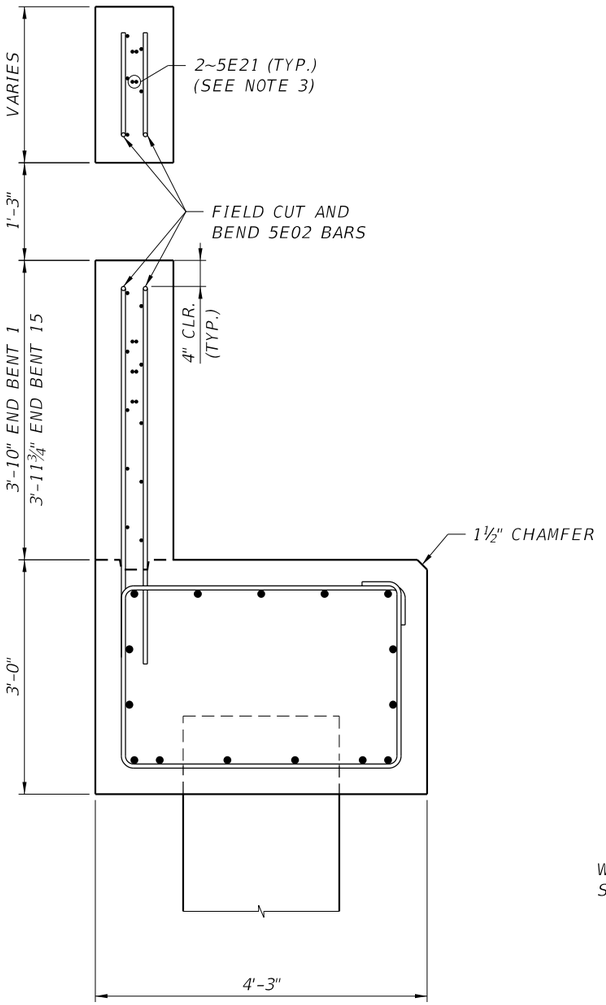

SECTION C-C

(SEE SECTION A-A AND B-B FOR MAIN CAP REINFORCEMENT)

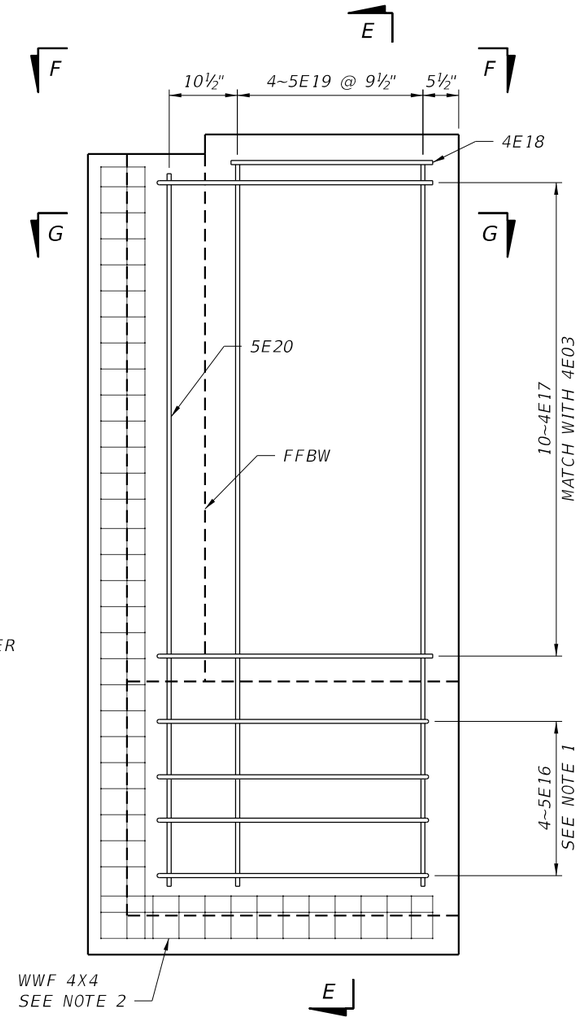

VIEW D-D

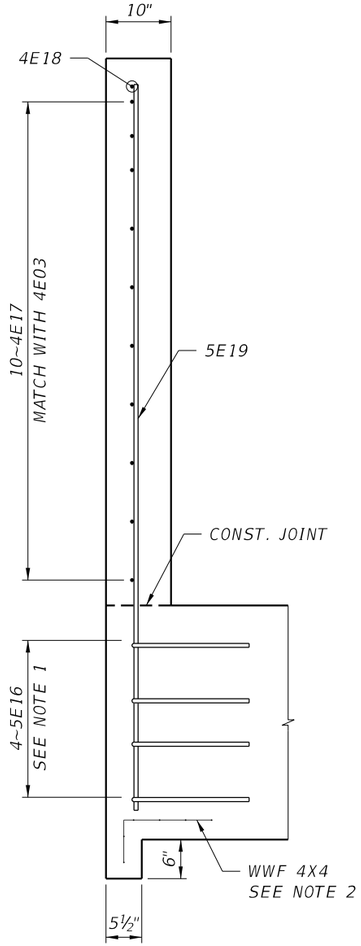

SECTION E-E

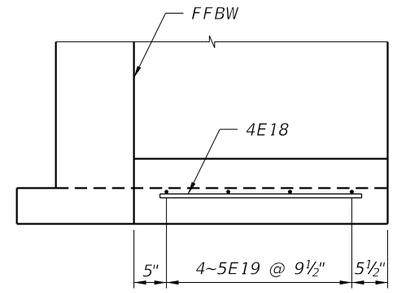

VIEW F-F

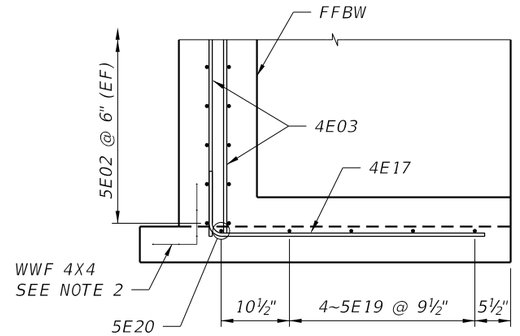

SECTION G-G

NOTES:

1. MATCH 5E16 BARS WITH LONGITUDINAL CAP REINFORCING.
2. WELDED WIRE FABRIC (WWF) 4X4 W1.4XW1.4 SHALL BE TIED TO REINFORCING STEEL. THE COST OF THE WWF IS INCIDENTAL TO THE COST OF THE CONCRETE.
3. SHIFT 5E21 BARS AS NECESSARY TO AVOID CONFLICT WITH 6D01, 4E04 (EB1) AND 4E03 (EB15) BARS.

BRIDGE NO. 124143

NOTICE: THE OFFICIAL RECORD OF THIS SHEET IS THE ELECTRONIC FILE DIGITALLY SIGNED AND SEALED UNDER RULE 61G15-23.004, F.A.C.

REVISIONS

DATE	BY	DESCRIPTION	DATE	BY	DESCRIPTION

Kisinger Campo & Associates Corp.
201 N. Franklin Street
Suite 400
Tampa, FL 33602
Alfredo Jose Layrisse, PE No. 75610

DRAWN BY:	CHECKED BY:	DESIGNED BY:	CHECKED BY:
SKB 12-21	LM 12-21	JHJ 04-20	SKB 04-20

LEE COUNTY PUBLIC WORKS
DEPARTMENT OF TRANSPORTATION

ROAD NO.	COUNTY	COUNTY PROJECT No
CR 865	LEE	CN160002

SHEET TITLE: END BENT DETAILS (2 OF 3)

REF. DWG. NO.:

PROJECT NAME: ESTERO BLVD. (CR 865) OVER BIG CARLOS PASS

SHEET NO.: B1-37

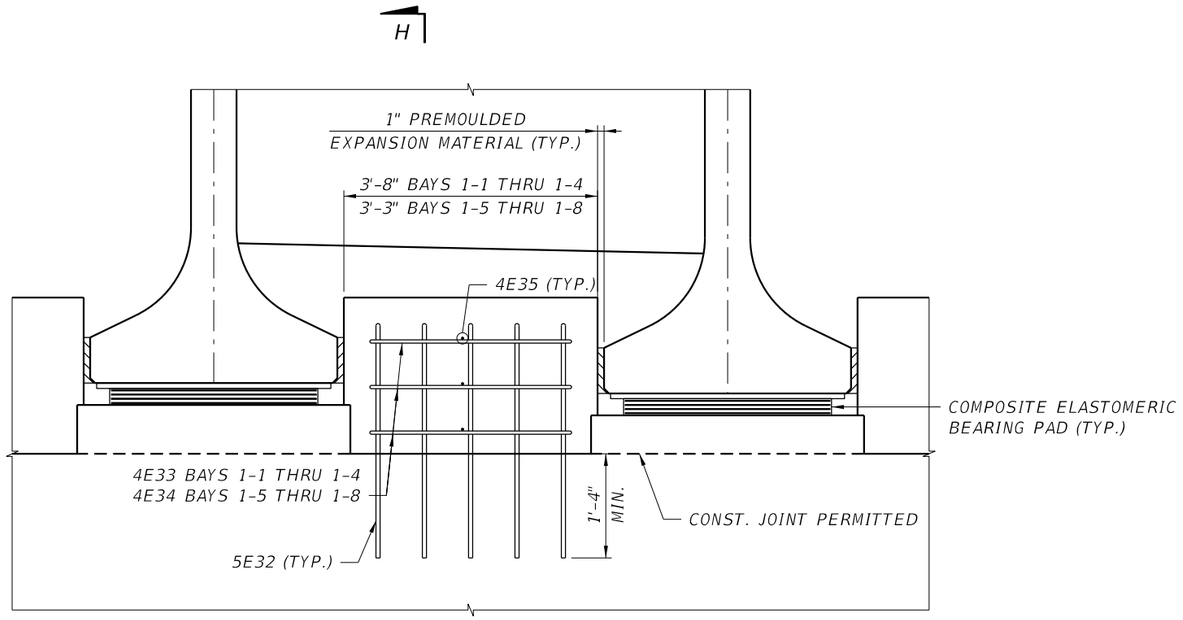

SHEAR BLOCK - ELEVATION

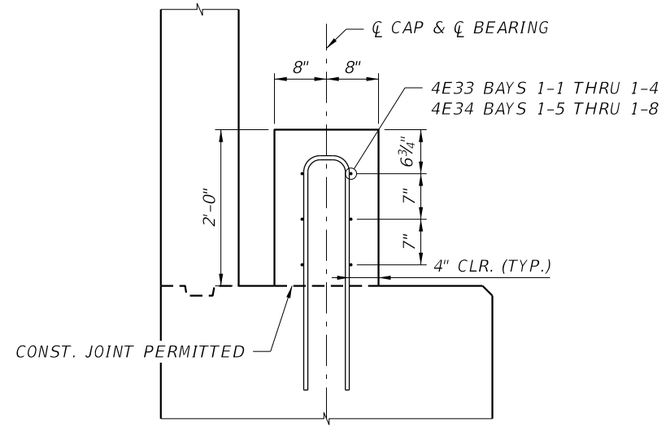

SECTION H-H

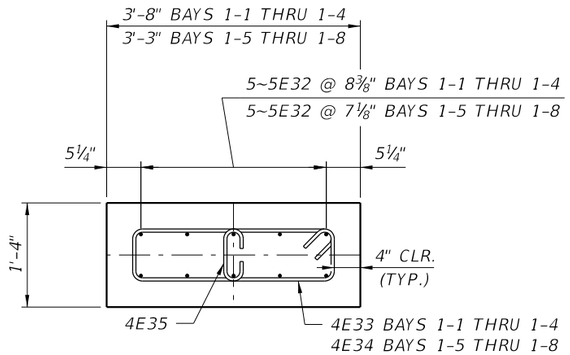

SHEAR BLOCK - PLAN

BRIDGE NO. 124143

REVISIONS					
DATE	BY	DESCRIPTION	DATE	BY	DESCRIPTION

Kisinger Campo & Associates Corp.
201 N. Franklin Street
Suite 400
Tampa, FL 33602
Alfredo Jose Layrisse, PE No. 75610

DRAWN BY:	JBH 10-21
CHECKED BY:	JHJ 10-21
DESIGNED BY:	JHJ 10-21
CHECKED BY:	SKB 09-21

LEE COUNTY PUBLIC WORKS
DEPARTMENT OF TRANSPORTATION

ROAD NO.	COUNTY	COUNTY PROJECT No
CR 865	LEE	CN160002

SHEET TITLE: END BENT DETAILS (3 OF 3)

REF. DWG. NO.:

PROJECT NAME: ESTERO BLVD. (CR 865) OVER BIG CARLOS PASS

SHEET NO.: B1-38

NOTICE: THE OFFICIAL RECORD OF THIS SHEET IS THE ELECTRONIC FILE DIGITALLY SIGNED AND SEALED UNDER RULE 61G15-23.004, F.A.C.

DIRECTION OF STATIONING

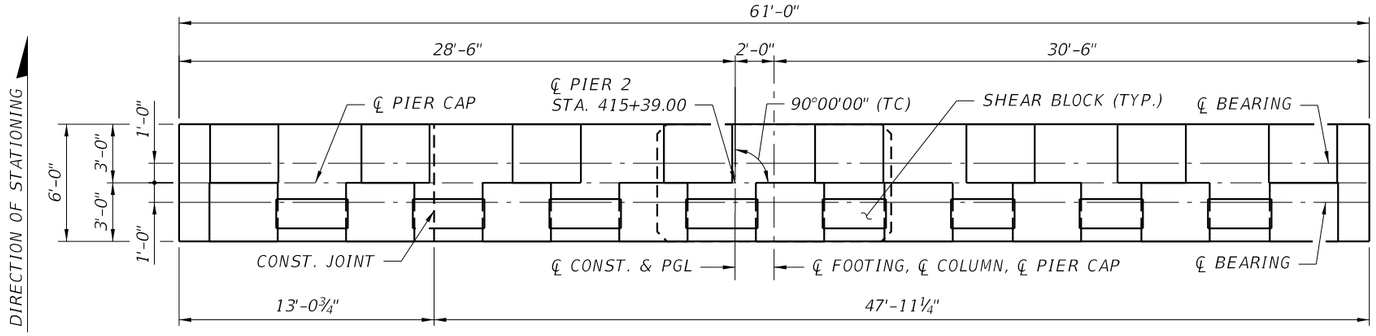

PLAN

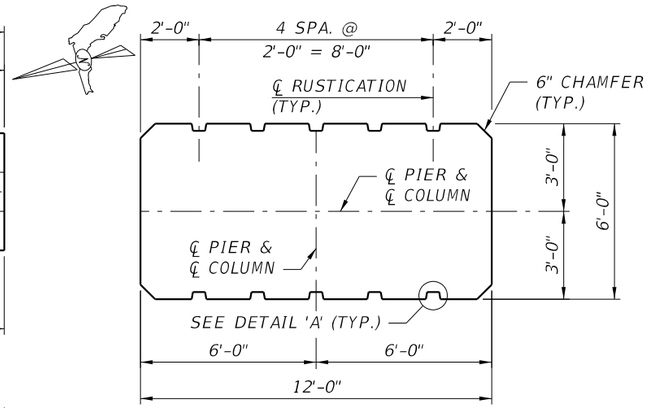

SECTION B-B

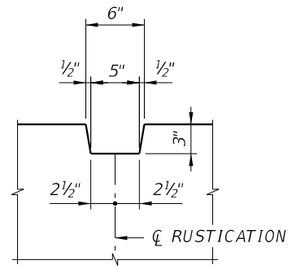

DETAIL 'A'

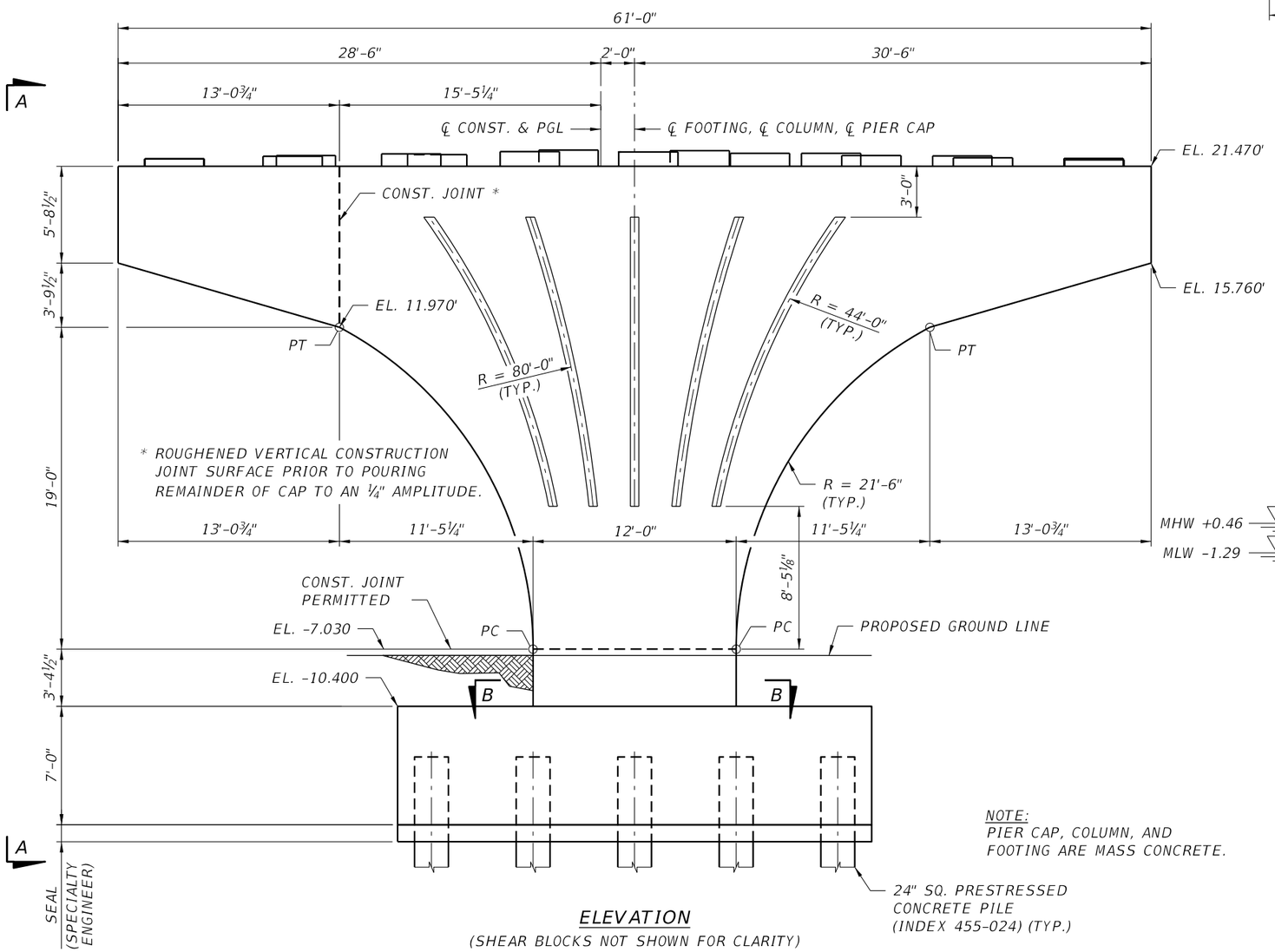

NOTE:
PIER CAP, COLUMN, AND
FOOTING ARE MASS CONCRETE.

ELEVATION
(SHEAR BLOCKS NOT SHOWN FOR CLARITY)

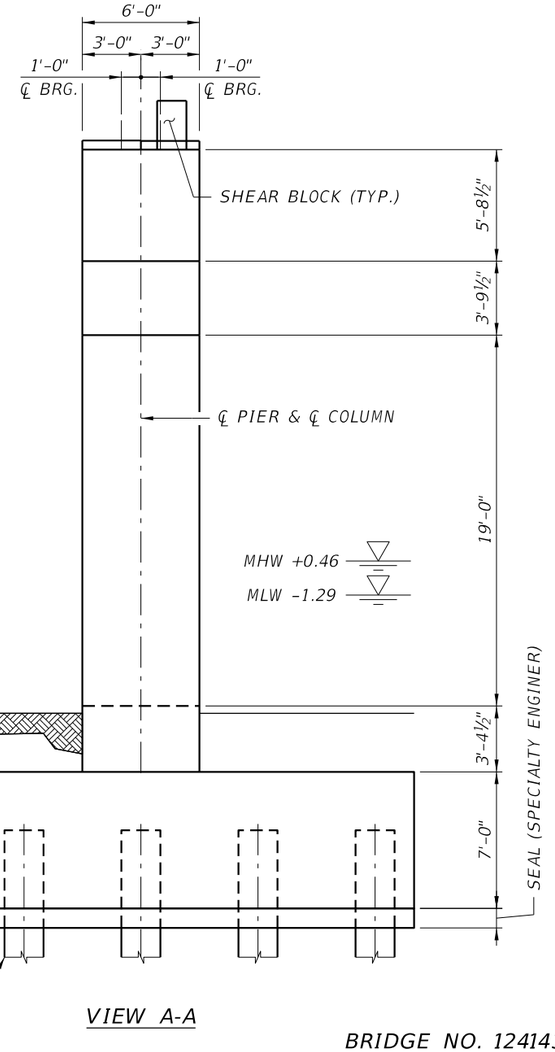

VIEW A-A

BRIDGE NO. 124143

NOTICE: THE OFFICIAL RECORD OF THIS SHEET IS THE ELECTRONIC FILE DIGITALLY SIGNED AND SEALED UNDER RULE 61G15-23.004, F.A.C.

REVISIONS					
DATE	BY	DESCRIPTION	DATE	BY	DESCRIPTION

Kisinger Campo & Associates Corp.
201 N. Franklin Street
Suite 400
Tampa, FL 33602
Alfredo Jose Layrisse, PE No. 75610

DRAWN BY:	SKB 10-19
CHECKED BY:	JHJ 04-21
DESIGNED BY:	SKB 10-19
CHECKED BY:	PDM 03-20

LEE COUNTY PUBLIC WORKS
DEPARTMENT OF TRANSPORTATION

ROAD NO.	COUNTY	COUNTY PROJECT No
CR 865	LEE	CN160002

SHEET TITLE: PIER GEOMETRY
PIER 2

REF. DWG. NO.

PROJECT NAME: ESTERO BLVD. (CR 865) OVER BIG CARLOS PASS

SHEET NO. B1-39

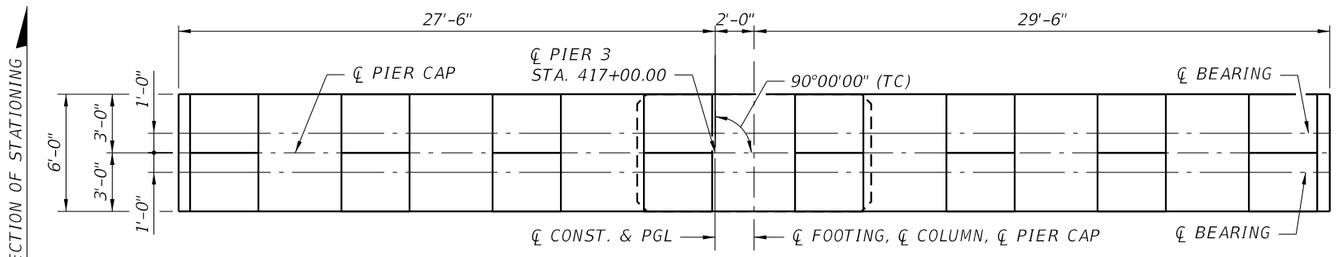

PLAN

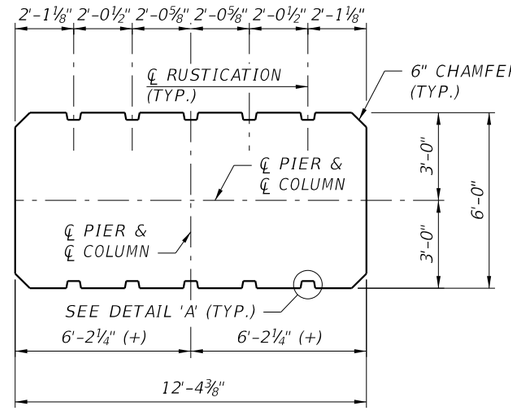

SECTION B-B

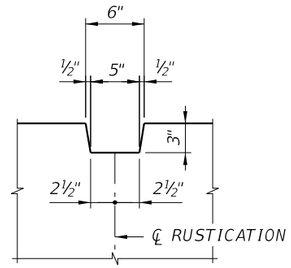

DETAIL 'A'

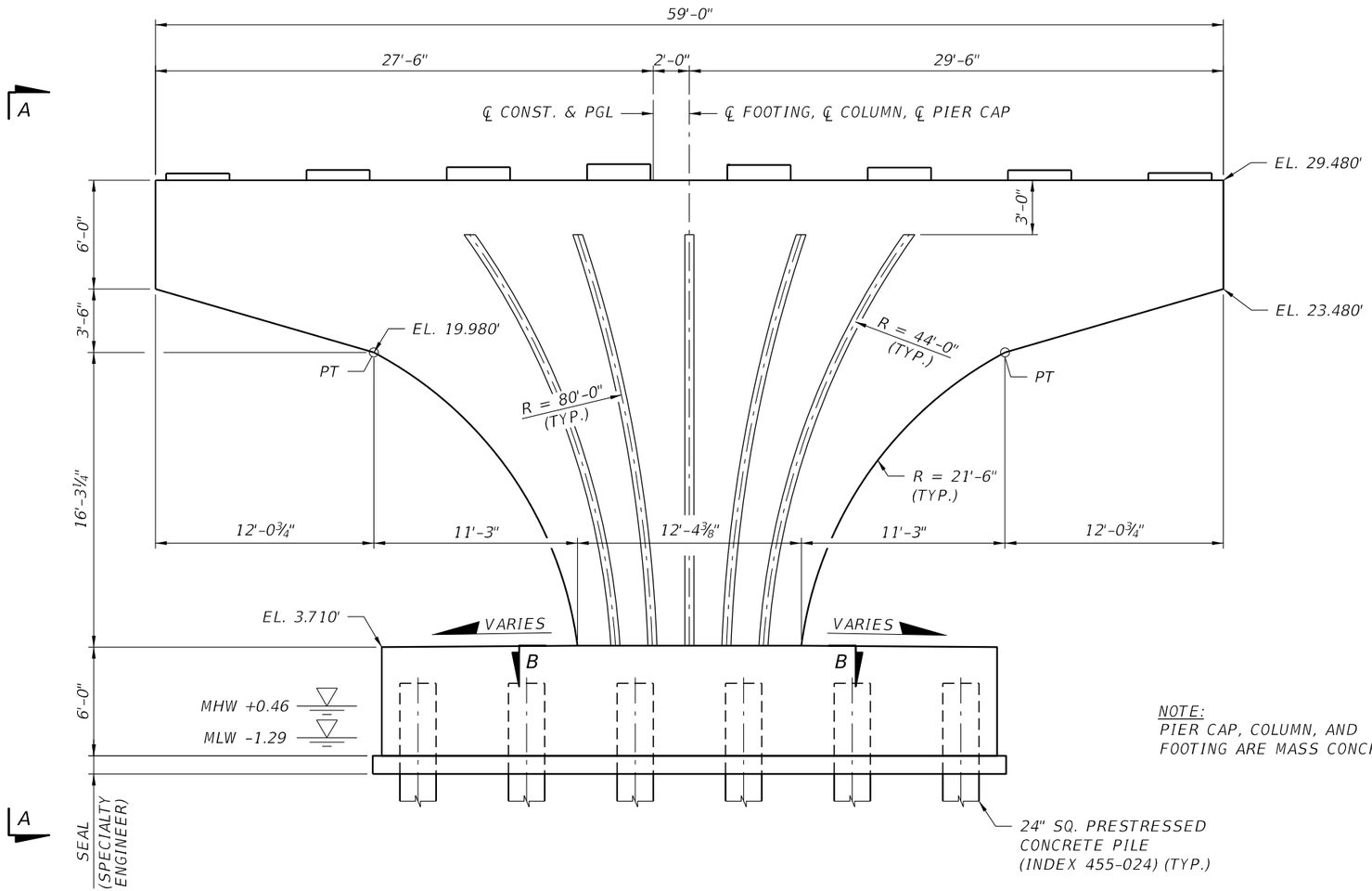

ELEVATION

NOTE:
PIER CAP, COLUMN, AND
FOOTING ARE MASS CONCRETE.

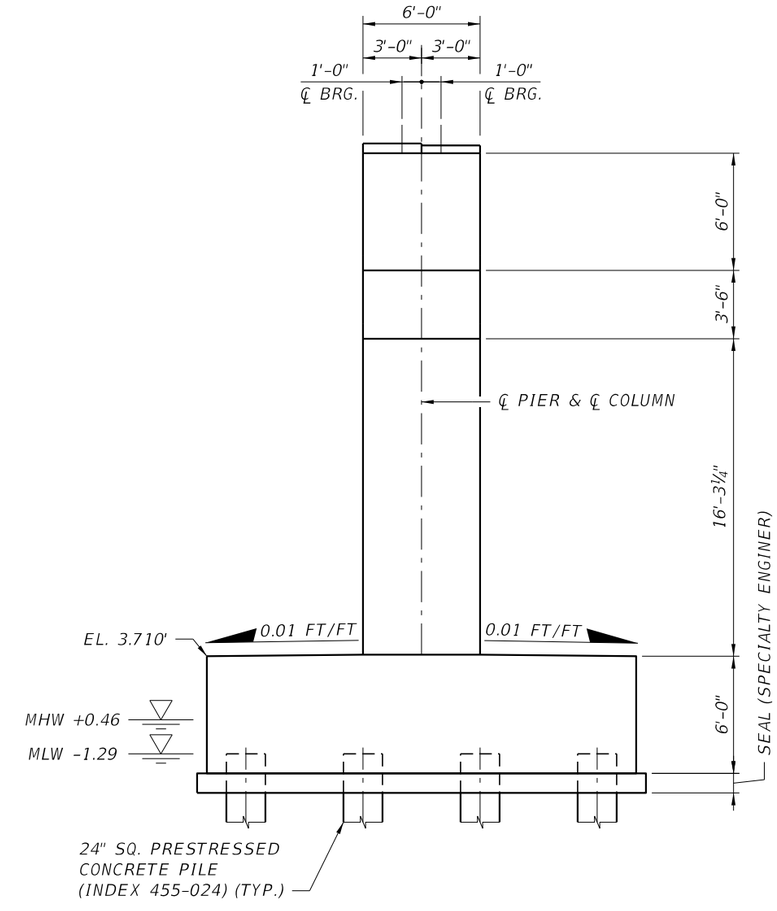

VIEW A-A

BRIDGE NO. 124143

NOTICE: THE OFFICIAL RECORD OF THIS SHEET IS THE ELECTRONIC FILE DIGITALLY SIGNED AND SEALED UNDER RULE 61G15-23.004, F.A.C.

REVISIONS					
DATE	BY	DESCRIPTION	DATE	BY	DESCRIPTION

Kisinger Campo & Associates Corp.
201 N. Franklin Street
Suite 400
Tampa, FL 33602
Alfredo Jose Layrisse, PE No. 75610

DRAWN BY: SKB 10-19
CHECKED BY: JHJ 04-21
DESIGNED BY: SKB 10-19
CHECKED BY: PDM 03-20

LEE COUNTY PUBLIC WORKS
DEPARTMENT OF TRANSPORTATION

ROAD NO.	COUNTY	COUNTY PROJECT No
CR 865	LEE	CN160002

SHEET TITLE: PIER GEOMETRY
PIER 3

REF. DWG. NO.:

PROJECT NAME: ESTERO BLVD. (CR 865) OVER BIG CARLOS PASS

SHEET NO.: B1-40

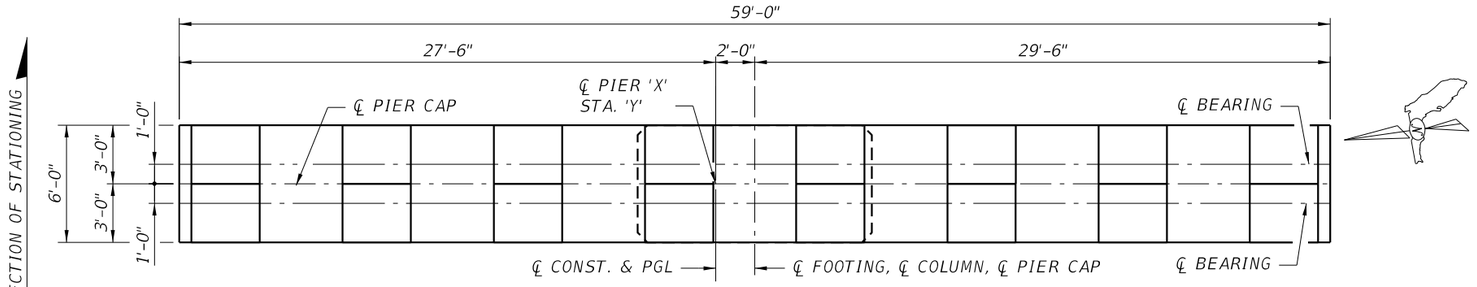

PLAN

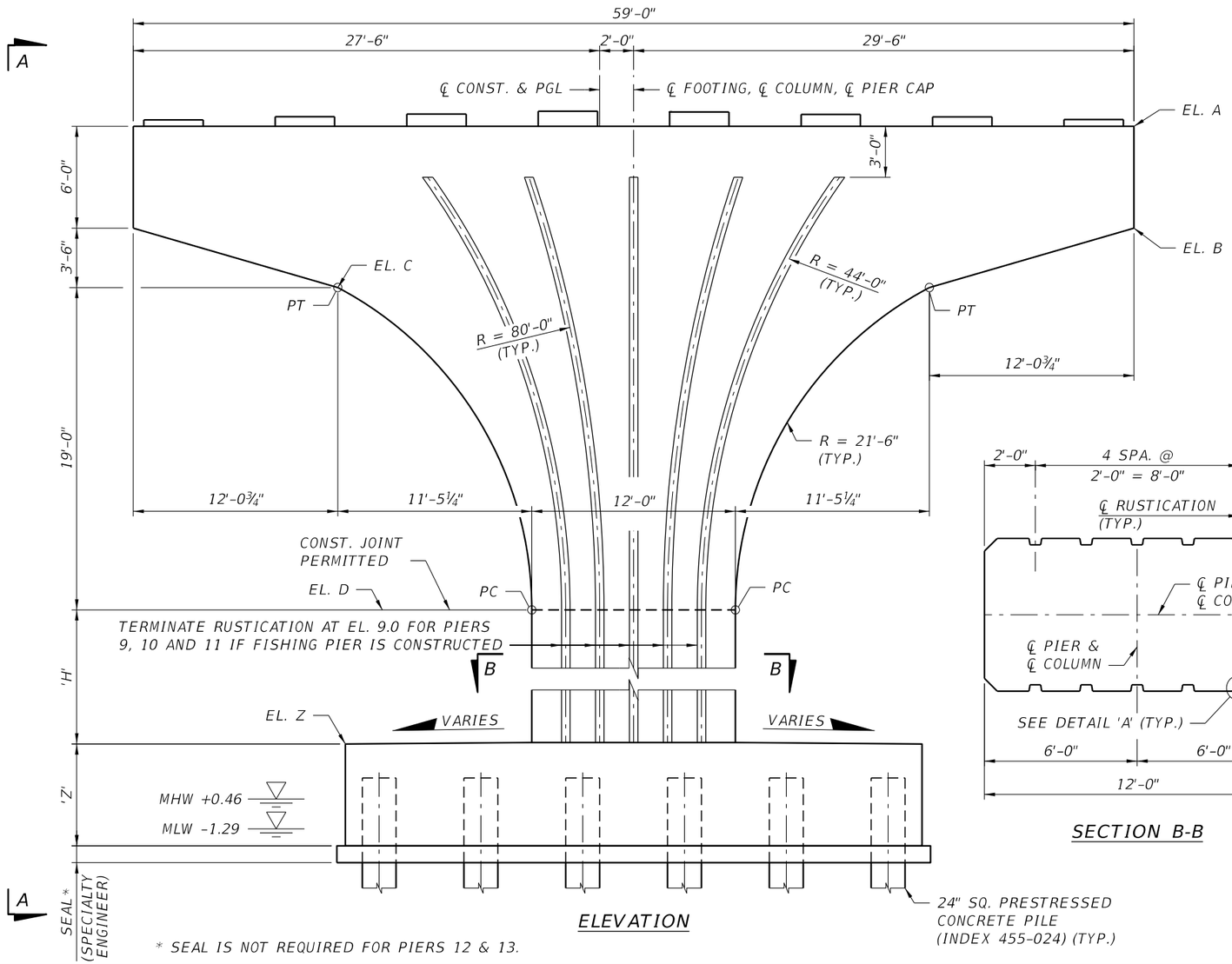

ELEVATION

* SEAL IS NOT REQUIRED FOR PIERS 12 & 13.

TABLE OF VARIABLES				TABLE OF ELEVATIONS				
'X'	'Y'	'H'	'Z'	EL. A	EL. B	EL. C	EL. D	EL. Z
4	418+61.00	5'-3⅞"	6'-0"	37.530	31.530	28.030	9.030	3.710
5	420+22.00	13'-4⅛"	6'-0"	45.550	39.550	36.050	17.050	3.710
6	421+83.00	21'-4½"	7'-0"	53.590	47.590	44.090	25.090	3.710
7	423+44.00	27'-9¾"	7'-0"	60.020	54.020	50.520	31.520	3.710
8	425+05.00	30'-4½"	7'-0"	62.590	56.590	53.090	34.090	3.710
9	426+66.00	29'-1⅛"	7'-0"	61.300	55.300	51.800	32.800	3.710*
10	428+27.00	24'-0⅞"	6'-0"	56.280	50.280	46.780	27.780	3.710*
11	429+88.00	16'-1½"	6'-0"	48.340	42.340	38.840	19.840	3.710*
12	431+49.00	7'-2¾"	6'-0"	40.230	34.230	30.730	11.730	4.500
13	433+10.00	1'-7⅞"	6'-0"	32.160	26.160	22.660	3.660	2.000

** LEVEL AND ROUGHENED TO A MINIMUM ¼" AMPLITUDE FOR PIER 9, 10 AND 11 IF FISHING PIER IS CONSTRUCTED

NOTE:
PIER CAP, COLUMN, AND FOOTING ARE MASS CONCRETE.

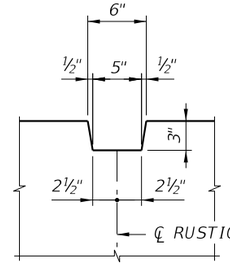

DETAIL 'A'

SECTION B-B

* SEE FISHING PIER PLANS FOR FISHING PIER SLAB ELEVATIONS ABOVE FOOTING.

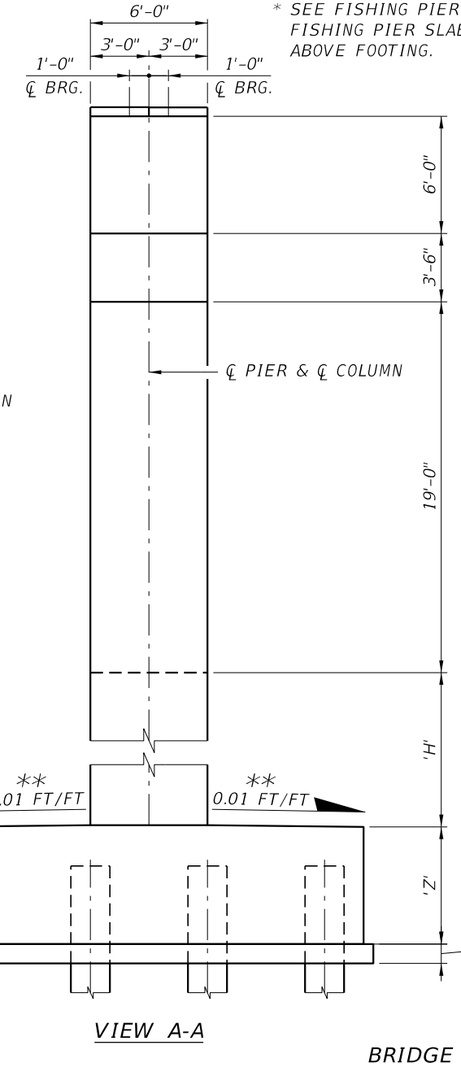

24" SQ. PRESTRESSED CONCRETE PILE (INDEX 455-024) (TYP.)

VIEW A-A

BRIDGE NO. 124143

NOTICE: THE OFFICIAL RECORD OF THIS SHEET IS THE ELECTRONIC FILE DIGITALLY SIGNED AND SEALED UNDER RULE 61G15-23.004, F.A.C.

REVISIONS					
DATE	BY	DESCRIPTION	DATE	BY	DESCRIPTION

Kisinger Campo & Associates Corp.
201 N. Franklin Street
Suite 400
Tampa, FL 33602
Alfredo Jose Layrisse, PE No. 75610

DRAWN BY:	SKB 10-19
CHECKED BY:	JHJ 04-21
DESIGNED BY:	SKB 10-19
CHECKED BY:	PDM 03-20

LEE COUNTY PUBLIC WORKS
DEPARTMENT OF TRANSPORTATION

ROAD NO.	COUNTY	COUNTY PROJECT No
CR 865	LEE	CN160002

SHEET TITLE: PIER GEOMETRY PIERS 4 THRU 13

REF. DWG. NO.:

PROJECT NAME: ESTERO BLVD. (CR 865) OVER BIG CARLOS PASS

SHEET NO.: B1-41

jhanna 2/24/2022 3:16:37 PM c:\pwworkingdir\kca-pw.bentley.com_kca-pw-01\josh hanna\dms00783\B1Pier03.dgn

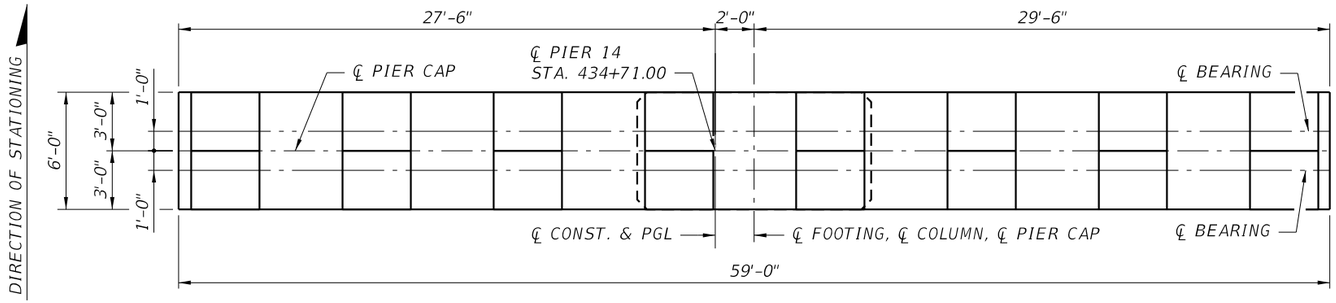

PLAN

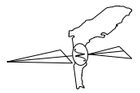

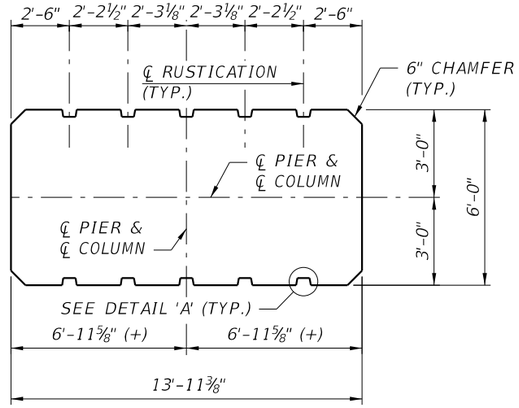

SECTION B-B

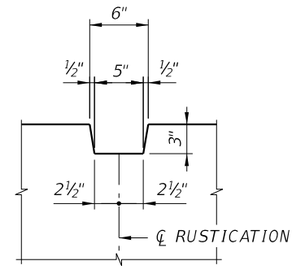

DETAIL 'A'

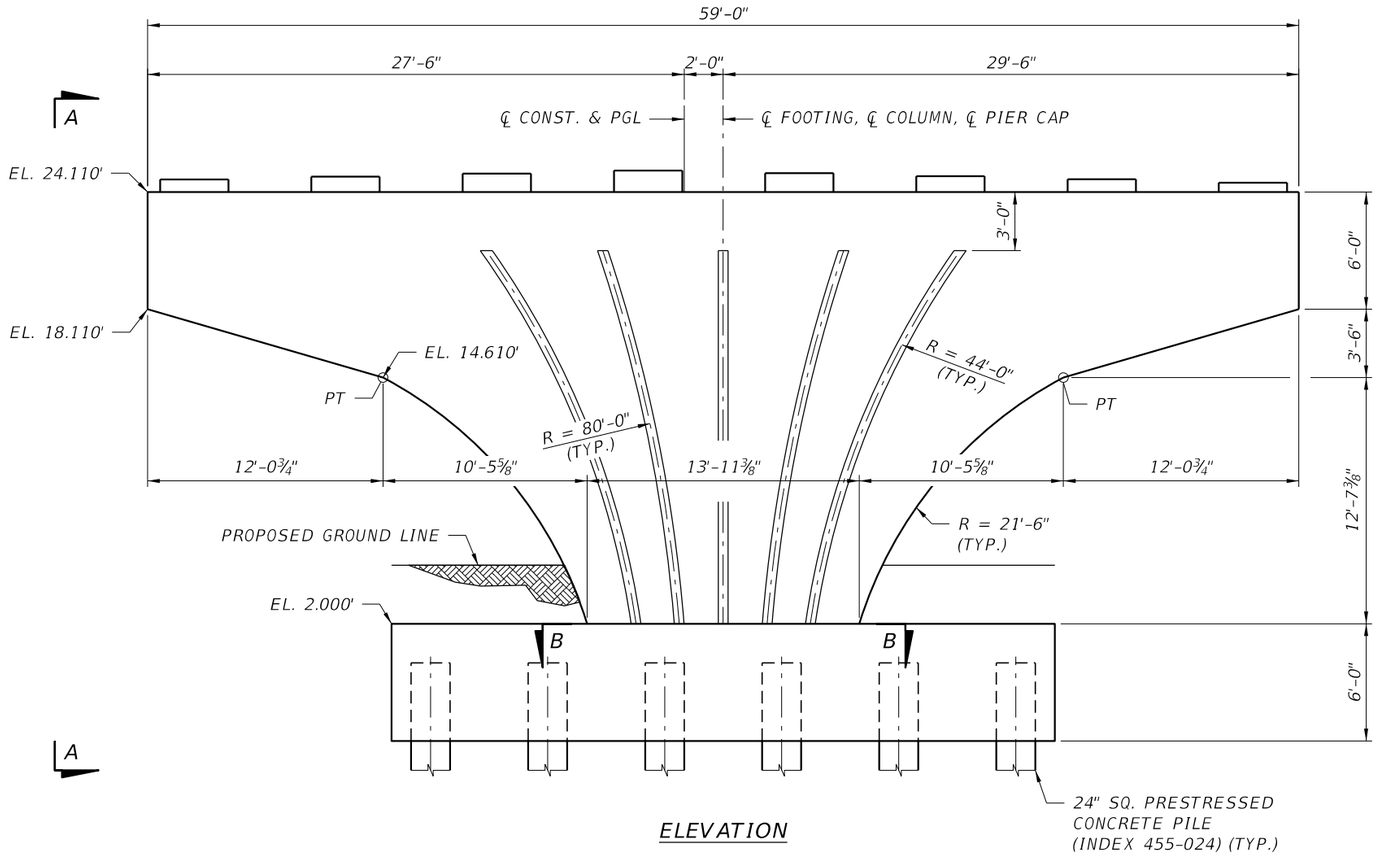

ELEVATION

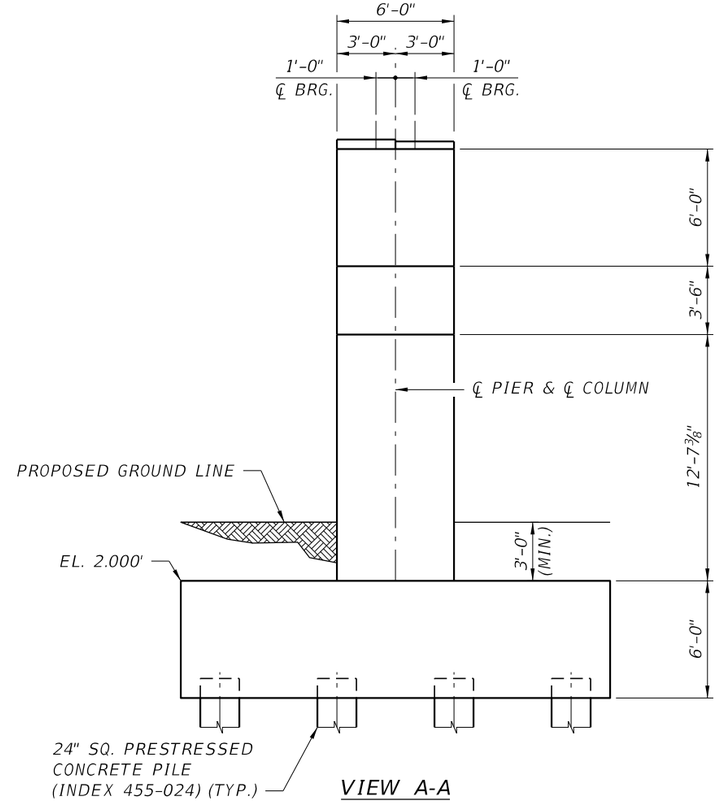

VIEW A-A

NOTE:
PIER CAP, COLUMN, AND
FOOTING ARE MASS CONCRETE.

BRIDGE NO. 124143

NOTICE: THE OFFICIAL RECORD OF THIS SHEET IS THE ELECTRONIC FILE DIGITALLY SIGNED AND SEALED UNDER RULE 61G15-23.004, F.A.C.

REVISIONS					
DATE	BY	DESCRIPTION	DATE	BY	DESCRIPTION

Kisinger Campo & Associates Corp.
201 N. Franklin Street
Suite 400
Tampa, FL 33602
Alfredo Jose Layrisse, PE No. 75610

DRAWN BY:	CHECKED BY:	DESIGNED BY:	CHECKED BY:
SKB 10-19	JHJ 04-21	SKB 10-19	PDM 03-20

LEE COUNTY PUBLIC WORKS
DEPARTMENT OF TRANSPORTATION

ROAD NO.	COUNTY	COUNTY PROJECT No
CR 865	LEE	CN160002

SHEET TITLE: PIER GEOMETRY
PIER 14

REF. DWG. NO.:

PROJECT NAME: ESTERO BLVD. (CR 865) OVER BIG CARLOS PASS

SHEET NO.: B1-42

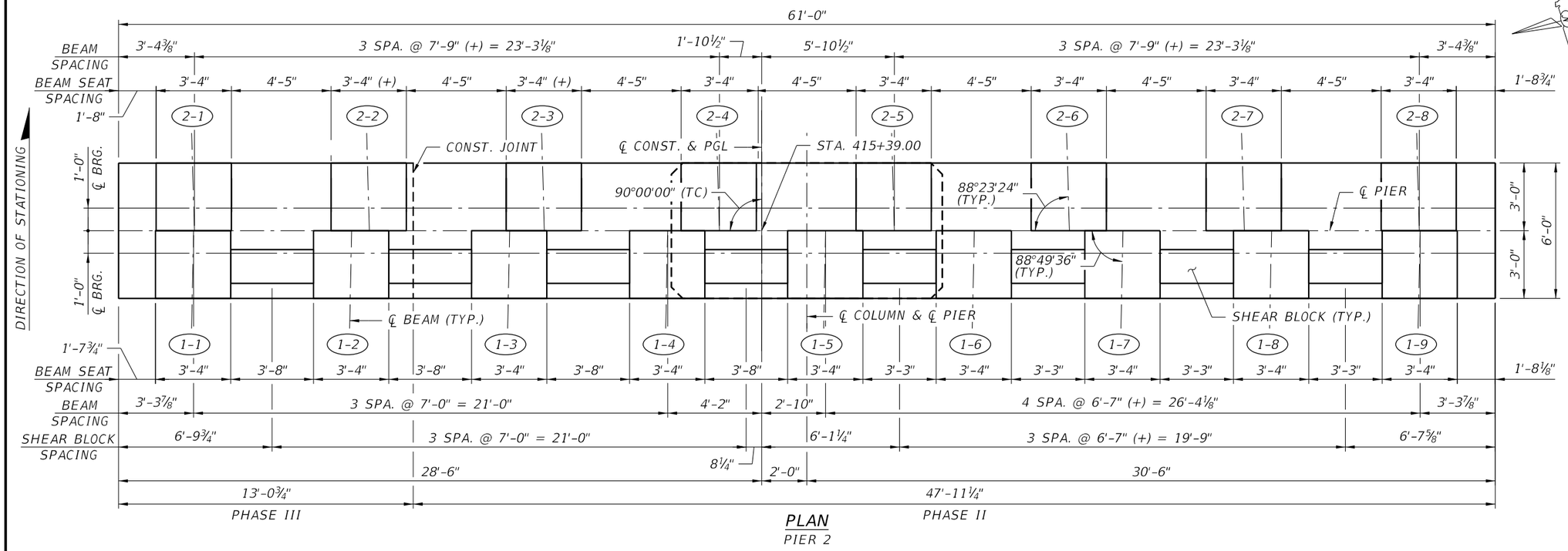

PLAN
PIER 2

PIER 2 – BEAM SEAT ELEVATIONS		
LOCATION	BEAM	ELEVATION
BACK SPAN	1-1	21.893
	1-2	22.054
	1-3	22.194
	1-4	22.334
	1-5	22.310
	1-6	22.230
	1-7	22.099
	1-8	21.967
	1-9	21.846
AHEAD SPAN	2-1	21.911
	2-2	22.097
	2-3	22.148
	2-4	22.418
	2-5	22.380
	2-6	22.225
	2-7	22.070
	2-8	21.925

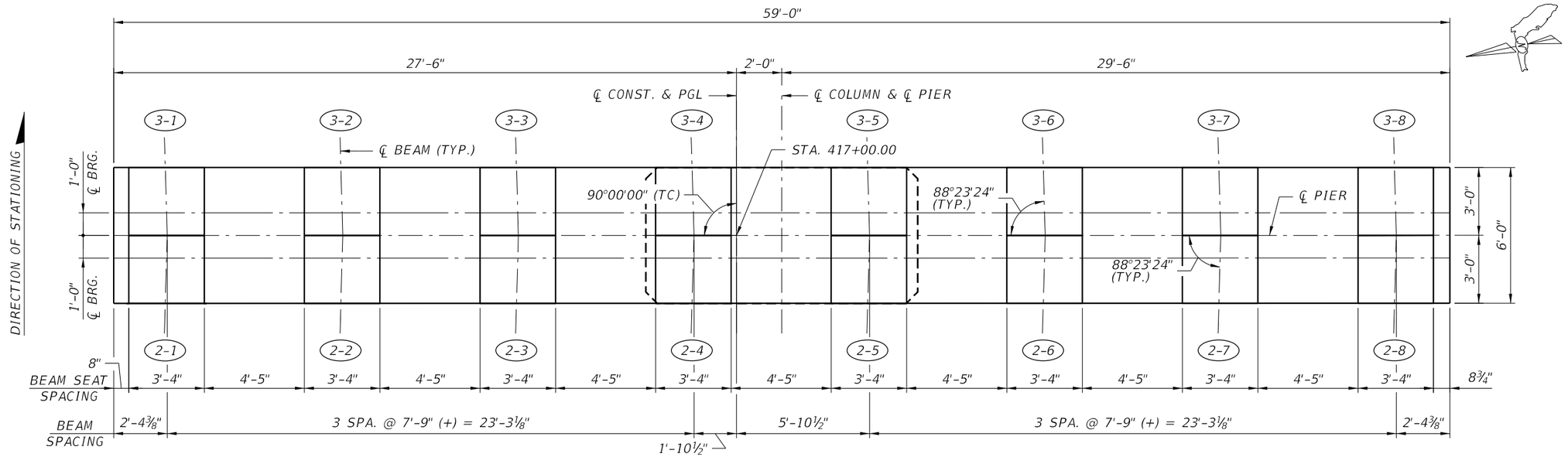

PLAN
PIER 3

PIER 3 – BEAM SEAT ELEVATIONS		
LOCATION	BEAM	ELEVATION
BACK SPAN	2-1	29.860
	2-2	30.047
	2-3	30.098
	2-4	30.368
	2-5	30.330
	2-6	30.176
	2-7	30.021
	2-8	29.876
AHEAD SPAN	3-1	29.961
	3-2	30.147
	3-3	30.302
	3-4	30.468
	3-5	30.430
	3-6	30.275
	3-7	30.130
	3-8	29.975

BRIDGE NO. 124143

NOTICE: THE OFFICIAL RECORD OF THIS SHEET IS THE ELECTRONIC FILE DIGITALLY SIGNED AND SEALED UNDER RULE 61G15-23.004, F.A.C.

REVISIONS					
DATE	BY	DESCRIPTION	DATE	BY	DESCRIPTION

Kisinger Campo & Associates Corp.
201 N. Franklin Street
Suite 400
Tampa, FL 33602
Alfredo Jose Layrisse, PE No. 75610

DRAWN BY:	CHECKED BY:	DESIGNED BY:	CHECKED BY:
SKB 10-19	JHJ 04-21	SKB 10-19	PDM 03-20

LEE COUNTY PUBLIC WORKS
DEPARTMENT OF TRANSPORTATION

ROAD NO.	COUNTY	COUNTY PROJECT No
CR 865	LEE	CN160002

SHEET TITLE: PIER CAP PLAN PIERS 2 & 3

REF. DWG. NO.

PROJECT NAME: ESTERO BLVD. (CR 865) OVER BIG CARLOS PASS

SHEET NO. B1-43

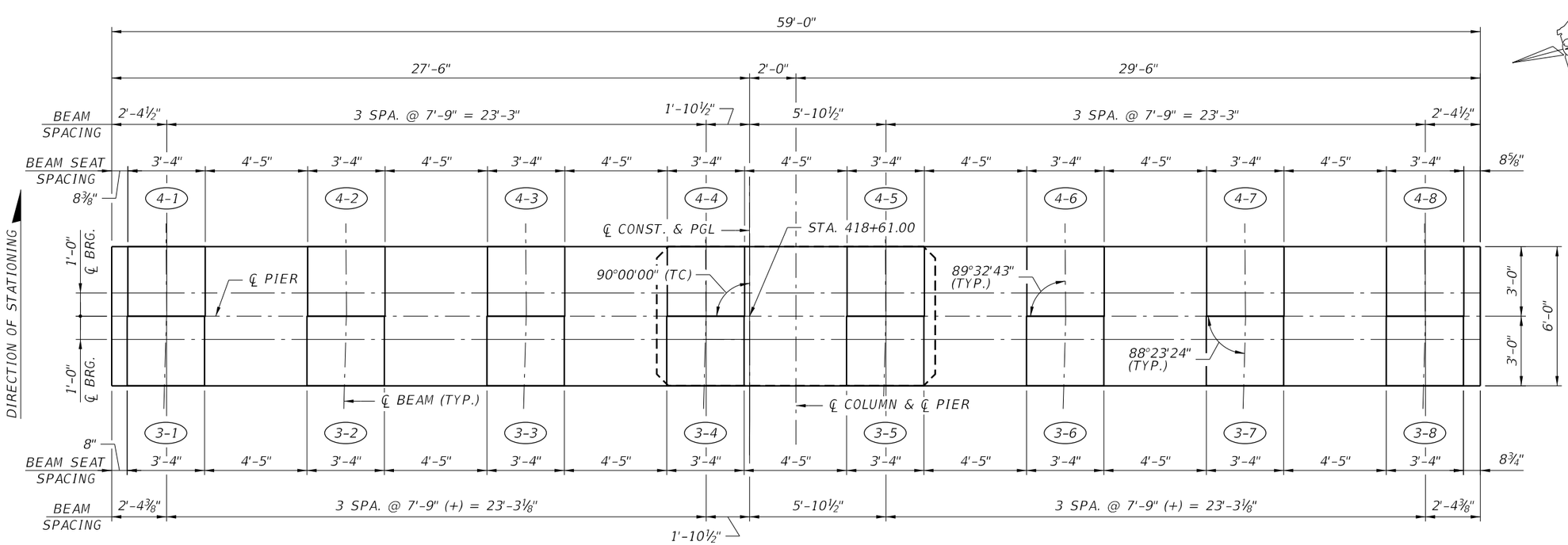

PLAN
PIER 4

PIER 4 - BEAM SEAT ELEVATIONS		
LOCATION	BEAM	ELEVATION
BACK SPAN	3-1	37.910
	3-2	38.097
	3-3	38.252
	3-4	38.418
	3-5	38.380
	3-6	38.226
	3-7	38.081
	3-8	37.926
AHEAD SPAN	4-1	38.053
	4-2	38.219
	4-3	38.374
	4-4	38.539
	4-5	38.459
	4-6	38.304
	4-7	38.149
	4-8	37.983

BRIDGE NO. 124143

NOTICE: THE OFFICIAL RECORD OF THIS SHEET IS THE ELECTRONIC FILE DIGITALLY SIGNED AND SEALED UNDER RULE 61G15-23.004, F.A.C.

REVISIONS					
DATE	BY	DESCRIPTION	DATE	BY	DESCRIPTION

Kisinger Campo & Associates Corp.
201 N. Franklin Street
Suite 400
Tampa, FL 33602
Alfredo Jose Layrisse, PE No. 75610

DRAWN BY:	SKB 10-19
CHECKED BY:	JHJ 04-21
DESIGNED BY:	SKB 10-19
CHECKED BY:	PDM 03-20

LEE COUNTY PUBLIC WORKS
DEPARTMENT OF TRANSPORTATION

ROAD NO.	COUNTY	COUNTY PROJECT No
CR 865	LEE	CN160002

SHEET TITLE: PIER CAP PLAN PIER 4

REF. DWG. NO.:

PROJECT NAME: ESTERO BLVD. (CR 865) OVER BIG CARLOS PASS

SHEET NO.: B1-44

jhanna 2/24/2022 3:16:47 PM c:\pwworkingdir\kca-pw.bentley.com_kca-pw-01\josh hanna\dms00783\B1Pier06.dgn

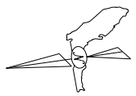

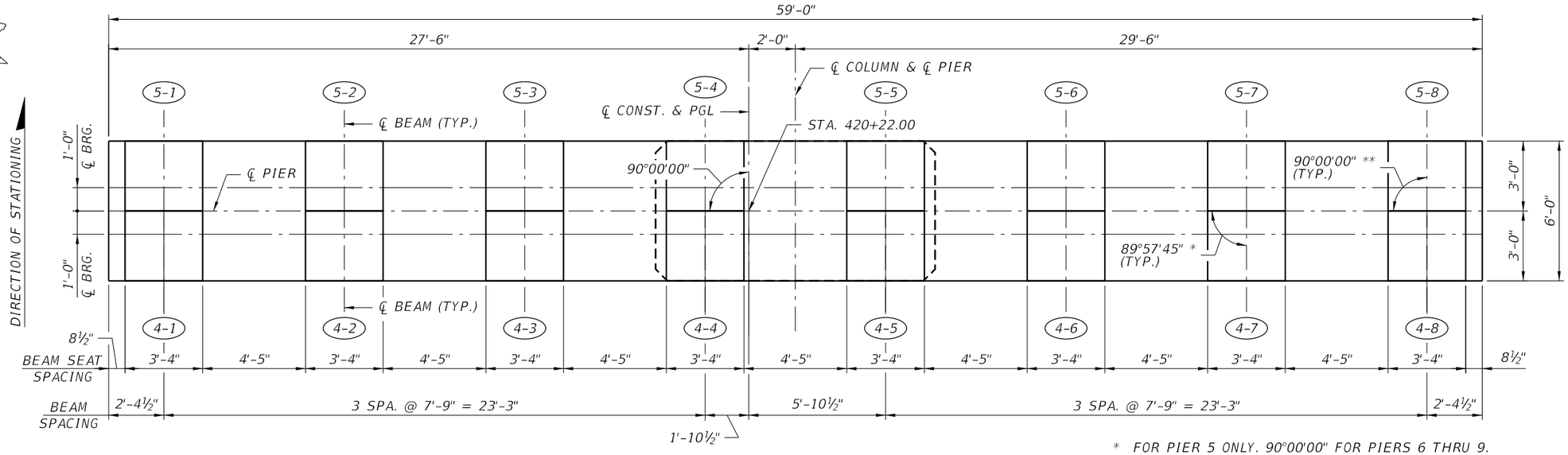

* FOR PIER 5 ONLY. 90°00'00" FOR PIERS 6 THRU 9.
** FOR PIERS 5 THRU 8 ONLY. 89°53'49" FOR PIER 9.

PLAN
(PIER 5 SHOWN - PIERS 6 THRU 9 SIMILAR)

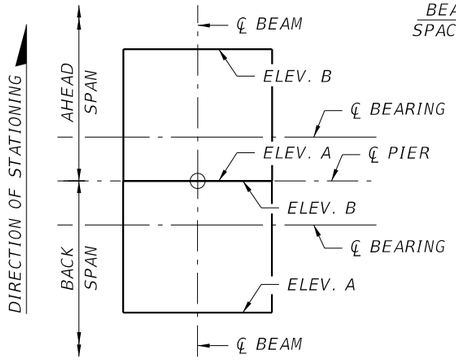

BEAM SEAT ELEVATIONS

LOCATION		BEAM	ELEV. A & B	LOCATION		BEAM	ELEV. A & B	LOCATION		BEAM	ELEV. A	ELEV. B	LOCATION		BEAM	ELEV. A	ELEV. B	LOCATION		BEAM	ELEV. A	ELEV. B
PIER 5 (STA 420+22.00)	BACK SPAN	4-1	46.003	PIER 6 (STA 421+83.00)	BACK SPAN	5-1	54.053	PIER 7 (STA 423+44.00)	BACK SPAN	6-1	60.481	60.481	PIER 8 (STA 425+05.00)	BACK SPAN	7-1	63.019	63.066	PIER 9 (STA 426+66.00)	BACK SPAN	8-1	61.871	61.849
		4-2	46.169			5-2	54.229			6-2	60.636	60.636			7-2	63.174	63.221			8-2	62.026	62.004
		4-3	46.324			5-3	54.384			6-3	60.791	60.791			7-3	63.329	63.376			8-3	62.181	62.159
		4-4	46.489			5-4	54.539			6-4	60.946	60.946			7-4	63.484	63.531			8-4	62.336	62.314
		4-5	46.409			5-5	54.459			6-5	60.866	60.866			7-5	63.404	63.451			8-5	62.256	62.234
		4-6	46.254			5-6	54.304			6-6	60.711	60.711			7-6	63.249	63.296			8-6	62.101	62.079
		4-7	46.099			5-7	54.149			6-7	60.556	60.556			7-7	63.094	63.141			8-7	61.946	61.924
		4-8	45.934			5-8	53.973			6-8	60.401	60.401			7-8	62.939	62.986			8-8	61.791	61.769
	AHEAD SPAN	5-1	46.103		AHEAD SPAN	6-1	54.369		AHEAD SPAN	7-1	60.580	60.626		AHEAD SPAN	8-1	63.066	63.043		AHEAD SPAN	9-1	61.761	61.761
		5-2	46.279			6-2	54.524			7-2	60.735	60.781			8-2	63.221	63.198			9-2	61.916	61.916
		5-3	46.434			6-3	54.679			7-3	60.890	60.936			8-3	63.376	63.353			9-3	62.071	62.071
		5-4	46.589			6-4	54.834			7-4	61.045	61.091			8-4	63.531	63.508			9-4	62.226	62.226
		5-5	46.509			6-5	54.754			7-5	60.965	61.011			8-5	63.451	63.428			9-5	62.146	62.146
		5-6	46.354			6-6	54.599			7-6	60.810	60.856			8-6	63.296	63.273			9-6	61.991	61.991
		5-7	46.199			6-7	54.444			7-7	60.655	60.701			8-7	63.141	63.118			9-7	61.836	61.836
		5-8	46.023			6-8	54.289			7-8	60.500	60.546			8-8	62.986	62.963			9-8	61.681	61.681

BRIDGE NO. 124143

REVISIONS					
DATE	BY	DESCRIPTION	DATE	BY	DESCRIPTION

Kisinger Campo & Associates Corp.
201 N. Franklin Street
Suite 400
Tampa, FL 33602
Alfredo Jose Layrisse, PE No. 75610

DRAWN BY:	CHECKED BY:	DESIGNED BY:	CHECKED BY:
SKB 10-19	JHJ 04-21	SKB 10-19	PDM 03-20

LEE COUNTY PUBLIC WORKS
DEPARTMENT OF TRANSPORTATION

ROAD NO.	COUNTY	COUNTY PROJECT No
CR 865	LEE	CN160002

SHEET TITLE: *PIER CAP PLAN PIERS 5 THRU 9*

REF. DWG. NO.:

PROJECT NAME: *ESTERO BLVD. (CR 865) OVER BIG CARLOS PASS*

SHEET NO.: B1-45

NOTICE: THE OFFICIAL RECORD OF THIS SHEET IS THE ELECTRONIC FILE DIGITALLY SIGNED AND SEALED UNDER RULE 61G15-23.004, F.A.C.

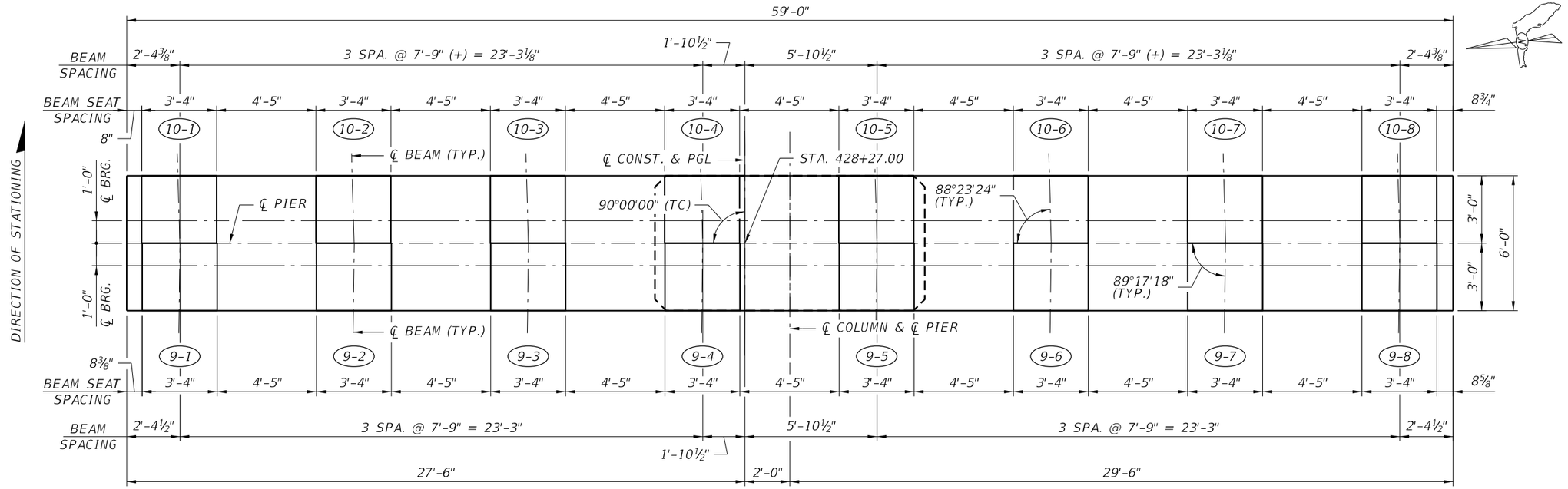

PLAN
PIER 10

PIER 10 – BEAM SEAT ELEVATIONS		
LOCATION	BEAM	ELEVATION
BACK SPAN	9-1	56.902
	9-2	57.057
	9-3	57.212
	9-4	57.367
	9-5	57.287
	9-6	57.132
	9-7	56.977
	9-8	56.822
AHEAD SPAN	10-1	56.663
	10-2	56.850
	10-3	57.005
	10-4	57.160
	10-5	57.133
	10-6	56.978
	10-7	56.823
	10-8	56.679

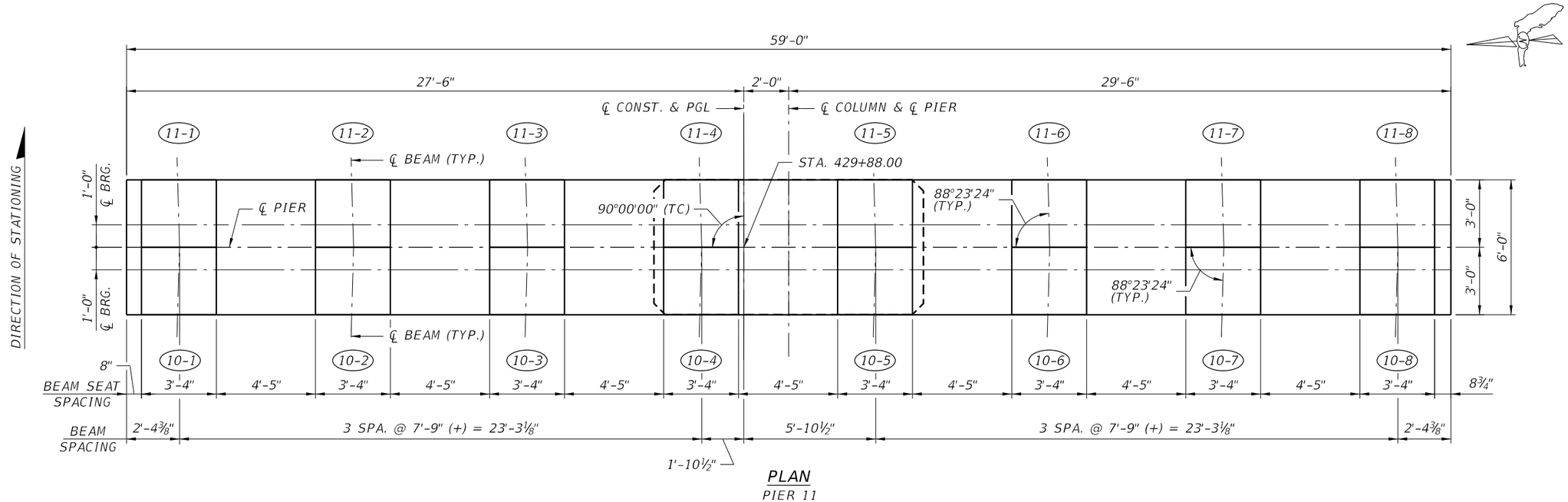

PLAN
PIER 11

PIER 11 – BEAM SEAT ELEVATIONS		
LOCATION	BEAM	ELEVATION
BACK SPAN	10-1	48.927
	10-2	49.113
	10-3	49.268
	10-4	49.423
	10-5	49.396
	10-6	49.241
	10-7	49.086
	10-8	48.941
AHEAD SPAN	11-1	48.719
	11-2	48.906
	11-3	49.061
	11-4	49.227
	11-5	49.189
	11-6	49.035
	11-7	48.890
	11-8	48.735

BRIDGE NO. 124143

NOTICE: THE OFFICIAL RECORD OF THIS SHEET IS THE ELECTRONIC FILE DIGITALLY SIGNED AND SEALED UNDER RULE 61G15-23.004, F.A.C.

REVISIONS

DATE	BY	DESCRIPTION	DATE	BY	DESCRIPTION

Kisinger Campo & Associates Corp.
201 N. Franklin Street
Suite 400
Tampa, FL 33602
Alfredo Jose Layrisse, PE No. 75610

DRAWN BY:	SKB 10-19
CHECKED BY:	JHJ 04-21
DESIGNED BY:	SKB 10-19
CHECKED BY:	PDM 03-20

LEE COUNTY PUBLIC WORKS
DEPARTMENT OF TRANSPORTATION

ROAD NO.	COUNTY	COUNTY PROJECT No
CR 865	LEE	CN160002

SHEET TITLE: PIER CAP PLAN PIERS 10 & 11

REF. DWG. NO.:

PROJECT NAME: ESTERO BLVD. (CR 865) OVER BIG CARLOS PASS

SHEET NO.: B1-46

jhanna 2/24/2022 3:16:51 PM c:\pwworkingdir\kca-pw.bentley.com_kca-pw-01\josh hanna\dms00783\B1Pier08.dgn

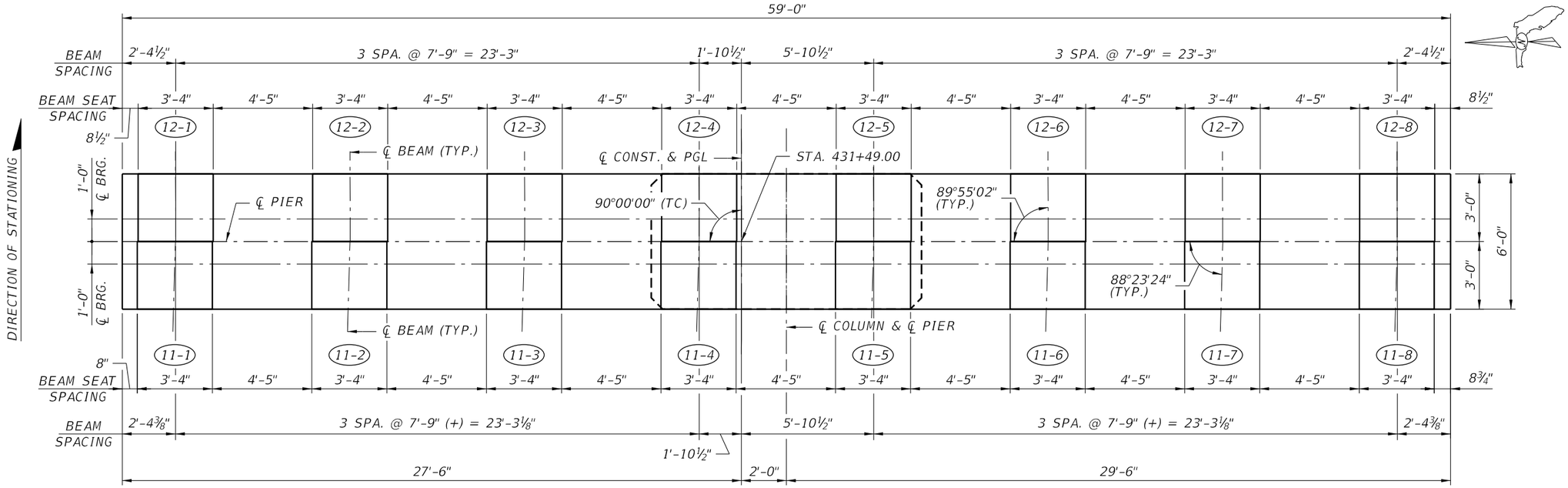

PLAN
PIER 12

PIER 12 – BEAM SEAT ELEVATIONS		
LOCATION	BEAM	ELEVATION
BACK SPAN	11-1	40.770
	11-2	40.956
	11-3	41.111
	11-4	41.277
	11-5	41.239
	11-6	41.084
	11-7	40.939
	11-8	40.784
AHEAD SPAN	12-1	40.743
	12-2	40.898
	12-3	41.053
	12-4	41.208
	12-5	41.097
	12-6	40.942
	12-7	40.788
	12-8	40.612

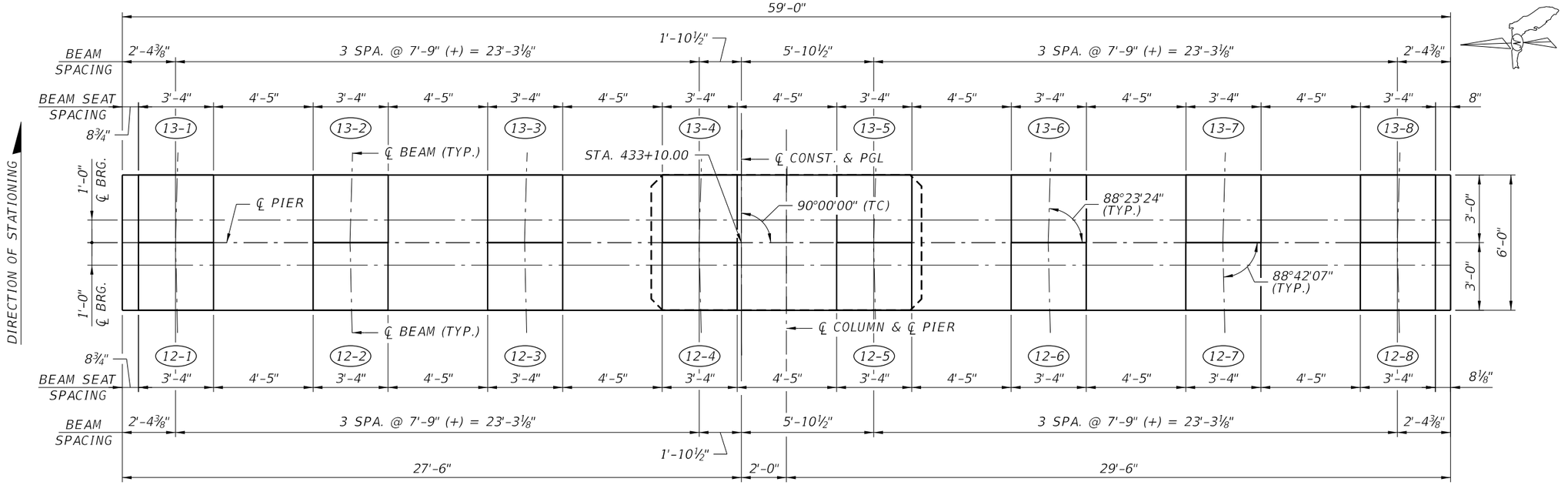

PLAN
PIER 13

PIER 13 – BEAM SEAT ELEVATIONS		
LOCATION	BEAM	ELEVATION
BACK SPAN	12-1	32.793
	12-2	32.948
	12-3	33.104
	12-4	33.259
	12-5	33.147
	12-6	32.992
	12-7	32.837
	12-8	32.661
AHEAD SPAN	13-1	32.715
	13-2	32.860
	13-3	33.014
	13-4	33.169
	13-5	33.036
	13-6	32.881
	13-7	32.726
	13-8	32.539

BRIDGE NO. 124143

NOTICE: THE OFFICIAL RECORD OF THIS SHEET IS THE ELECTRONIC FILE DIGITALLY SIGNED AND SEALED UNDER RULE 61G15-23.004, F.A.C.

REVISIONS					
DATE	BY	DESCRIPTION	DATE	BY	DESCRIPTION

Kisinger Campo & Associates Corp.
201 N. Franklin Street
Suite 400
Tampa, FL 33602
Alfredo Jose Layrisse, PE No. 75610

DRAWN BY: SKB 10-20
CHECKED BY: JHJ 04-21
DESIGNED BY: SKB 10-19
CHECKED BY: PDM 04-20

LEE COUNTY PUBLIC WORKS
DEPARTMENT OF TRANSPORTATION

ROAD NO.	COUNTY	COUNTY PROJECT No
CR 865	LEE	CN160002

SHEET TITLE: PIER CAP PLAN PIERS 12 & 13

REF. DWG. NO.:

PROJECT NAME: ESTERO BLVD. (CR 865) OVER BIG CARLOS PASS

SHEET NO.: B1-47

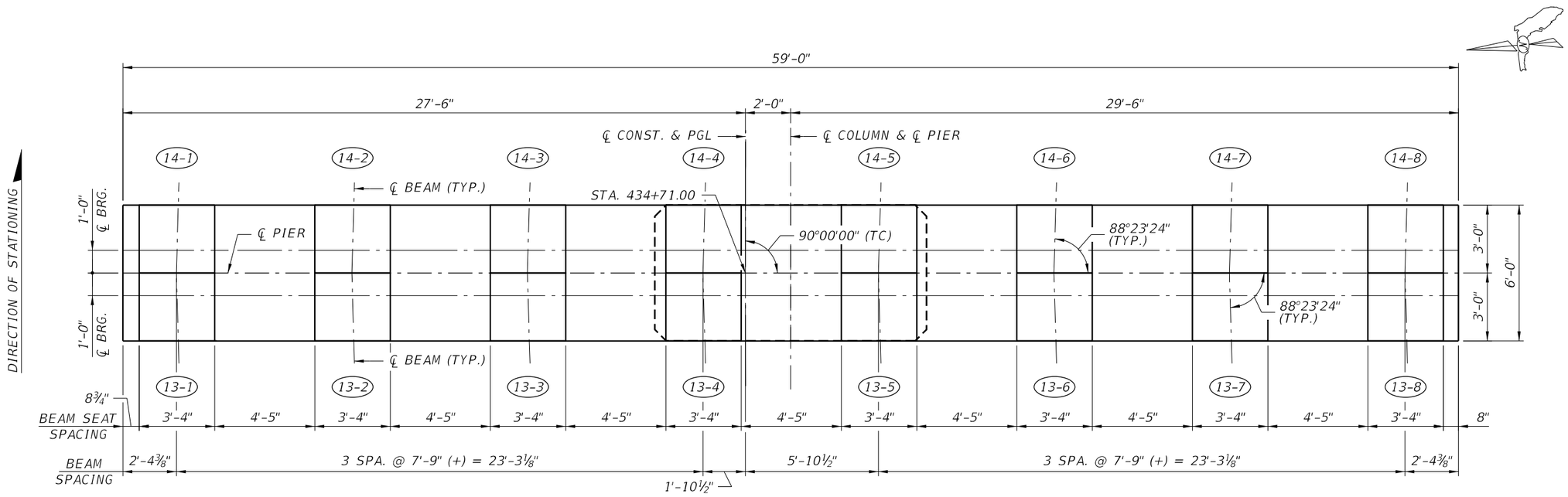

PIER 14 – BEAM SEAT ELEVATIONS		
LOCATION	BEAM	ELEVATION
BACK SPAN	13-1	24.764
	13-2	24.909
	13-3	25.064
	13-4	25.219
	13-5	25.086
	13-6	24.931
	13-7	24.776
	13-8	24.590
AHEAD SPAN	14-1	24.665
	14-2	24.810
	14-3	24.964
	14-4	25.119
	14-5	24.986
	14-6	24.831
	14-7	24.676
	14-8	24.489

PLAN
PIER 14

BRIDGE NO. 124143

NOTICE: THE OFFICIAL RECORD OF THIS SHEET IS THE ELECTRONIC FILE DIGITALLY SIGNED AND SEALED UNDER RULE 61G15-23.004, F.A.C.

REVISIONS

DATE	BY	DESCRIPTION	DATE	BY	DESCRIPTION

Kisinger Campo & Associates Corp.
201 N. Franklin Street
Suite 400
Tampa, FL 33602
Alfredo Jose Layrisse, PE No. 75610

DRAWN BY:	CHECKED BY:	DESIGNED BY:	CHECKED BY:
SKB 10-19	JHJ 04-21	SKB 10-19	PDM 03-20

LEE COUNTY PUBLIC WORKS
DEPARTMENT OF TRANSPORTATION

ROAD NO.	COUNTY	COUNTY PROJECT No
CR 865	LEE	CN160002

SHEET TITLE: PIER CAP PLAN PIER 14

REF. DWG. NO.:

PROJECT NAME: ESTERO BLVD. (CR 865) OVER BIG CARLOS PASS

SHEET NO.: B1-48

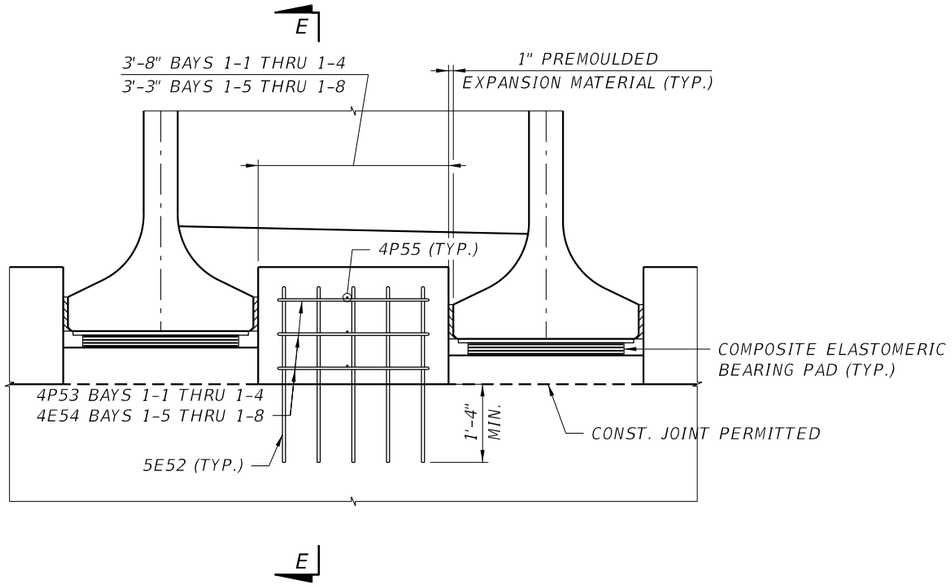

SHEAR BLOCK - ELEVATION

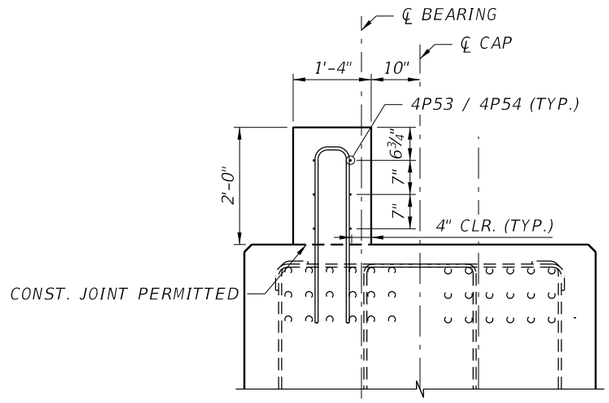

SECTION E-E

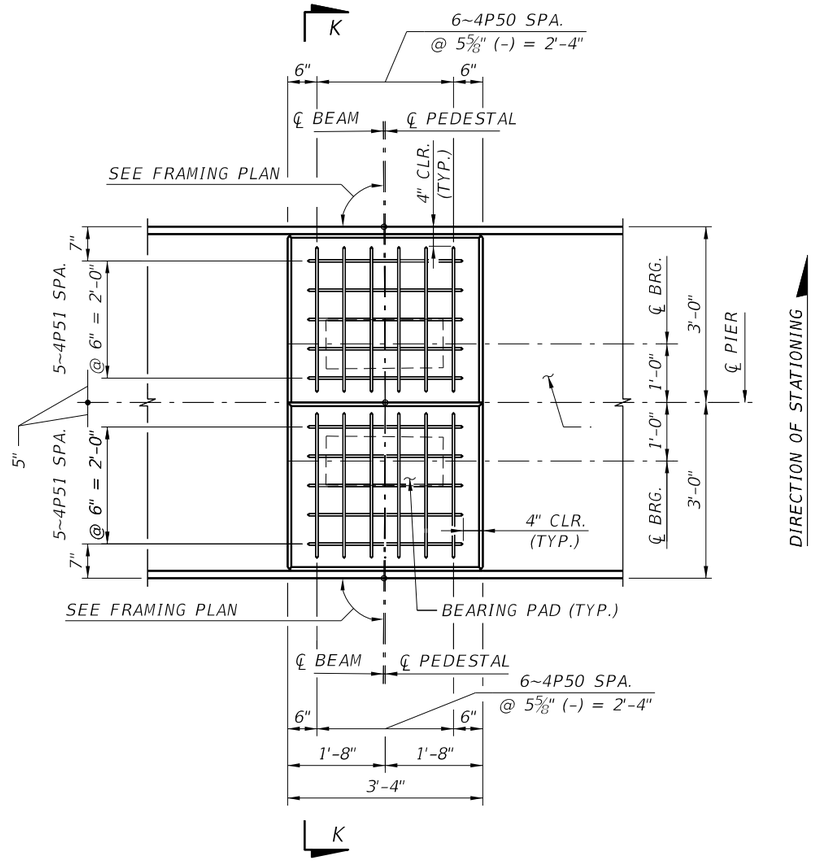

DIRECTION OF STATIONING

PLAN - TYPICAL PEDESTALS

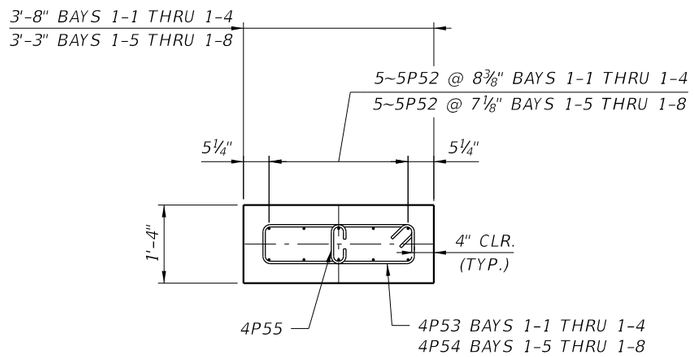

SHEAR BLOCK - PLAN

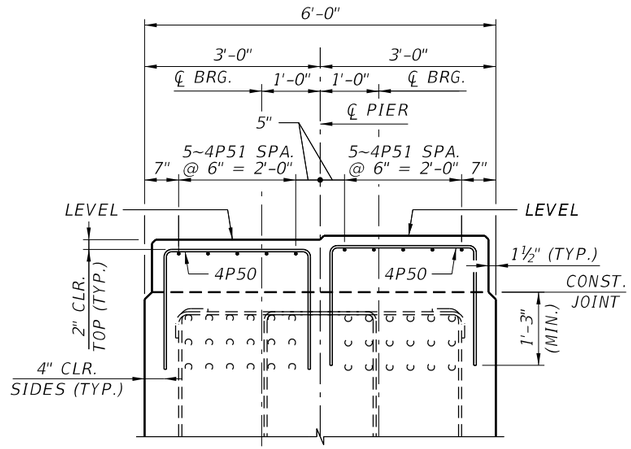

SECTION K-K

BRIDGE NO. 124143

NOTICE: THE OFFICIAL RECORD OF THIS SHEET IS THE ELECTRONIC FILE DIGITALLY SIGNED AND SEALED UNDER RULE 61G15-23.004, F.A.C.

REVISIONS					
DATE	BY	DESCRIPTION	DATE	BY	DESCRIPTION

Kisinger Campo & Associates Corp.
201 N. Franklin Street
Suite 400
Tampa, FL 33602
Alfredo Jose Layrisse, PE No. 75610

DRAWN BY:	CHECKED BY:	DESIGNED BY:	CHECKED BY:
JBH 10-21	AJL 10-21	JHJ 10-21	BAH 10-21

LEE COUNTY PUBLIC WORKS
DEPARTMENT OF TRANSPORTATION

ROAD NO.	COUNTY	COUNTY PROJECT No
CR 865	LEE	CN160002

SHEET TITLE: PIER PEDESTAL AND SHEAR BLOCK DETAILS

REF. DWG. NO.:

PROJECT NAME: ESTERO BLVD. (CR 865) OVER BIG CARLOS PASS

SHEET NO.: B1-49

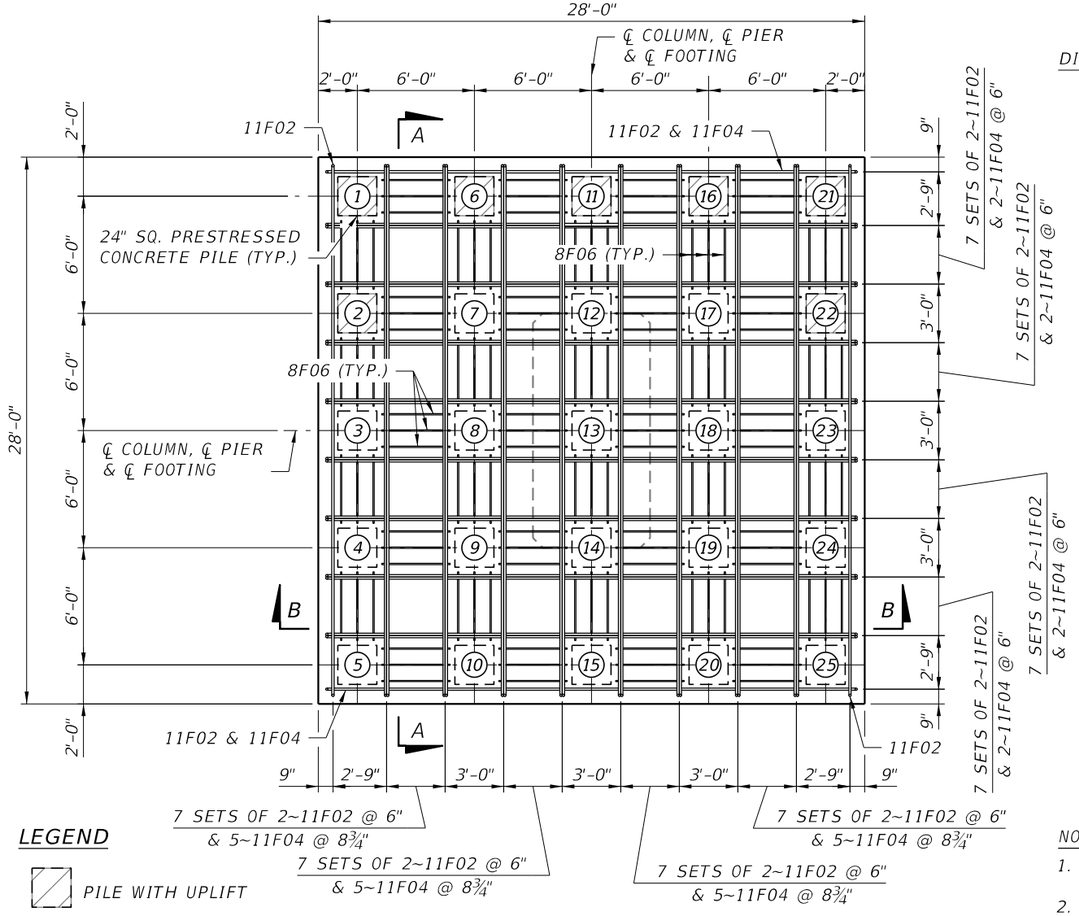

LEGEND

PILE WITH UPLIFT

PLAN

(BOTTOM STEEL ONLY)

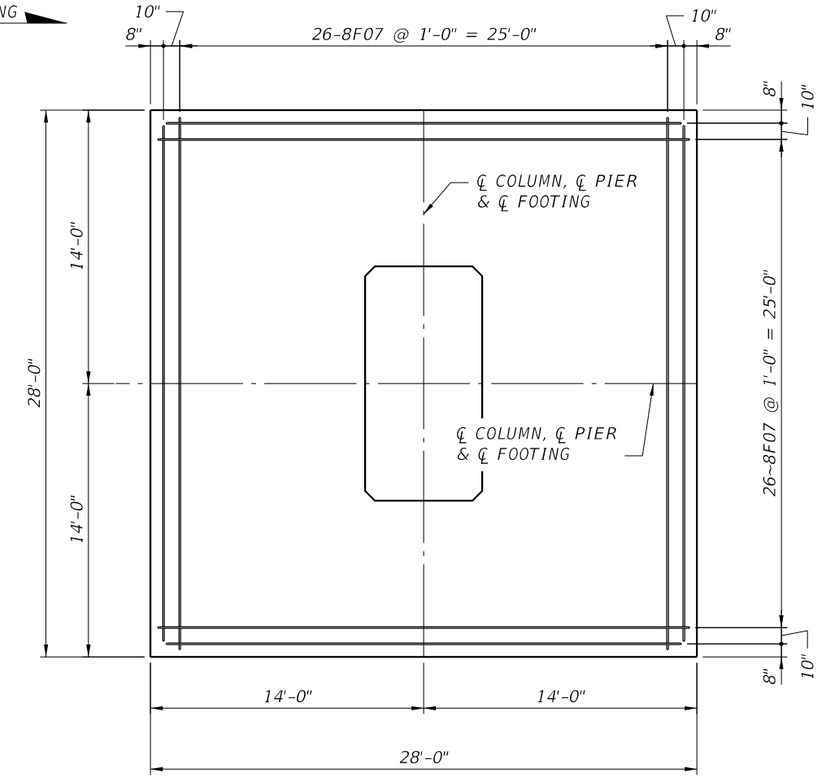

VIEW C-C

(TOP STEEL ONLY)

NOTES:

1. INTERIOR PILES EMBEDDED 1'-0". ALL OTHER PILES EMBEDDED 4'-0".
2. FOOTING IS MASS CONCRETE.

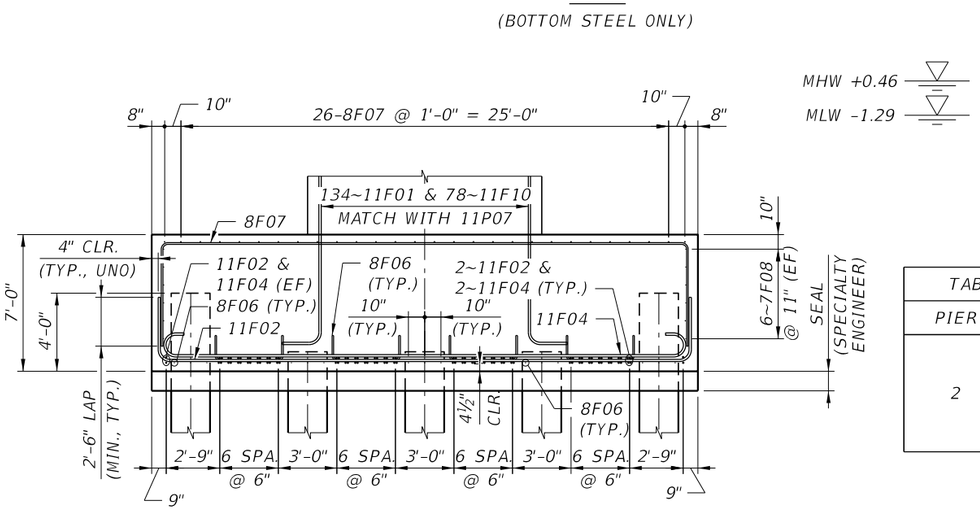

SECTION A-A

TABLE OF PILE CUT-OFF ELEVATIONS		
PIER	PILE NUMBER	CUT-OFF ELEV.
2	1-5, 6, 10, 11, 15, 16, 20, 21-25	-13.4
	7-9, 12-14, 17-19	-16.4

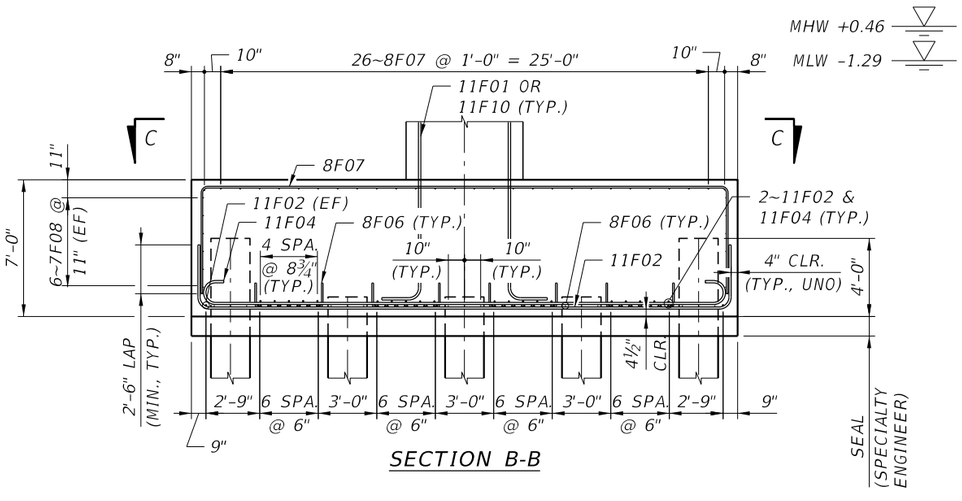

SECTION B-B

BRIDGE NO. 124143

REVISIONS					
DATE	BY	DESCRIPTION	DATE	BY	DESCRIPTION

Kisinger Campo & Associates Corp.
201 N. Franklin Street
Suite 400
Tampa, FL 33602
Alfredo Jose Layrisse, PE No. 75610

DRAWN BY:	SKB 10-20
CHECKED BY:	JHJ 04-21
DESIGNED BY:	JHJ 07-20
CHECKED BY:	SKB 10-20

LEE COUNTY PUBLIC WORKS
DEPARTMENT OF TRANSPORTATION

ROAD NO.	COUNTY	COUNTY PROJECT No
CR 865	LEE	CN160002

SHEET TITLE: FOOTING CAP REINFORCING PIER 2

REF. DWG. NO.:

PROJECT NAME: ESTERO BLVD. (CR 865) OVER BIG CARLOS PASS

SHEET NO.: B1-50

NOTICE: THE OFFICIAL RECORD OF THIS SHEET IS THE ELECTRONIC FILE DIGITALLY SIGNED AND SEALED UNDER RULE 61G15-23.004, F.A.C.

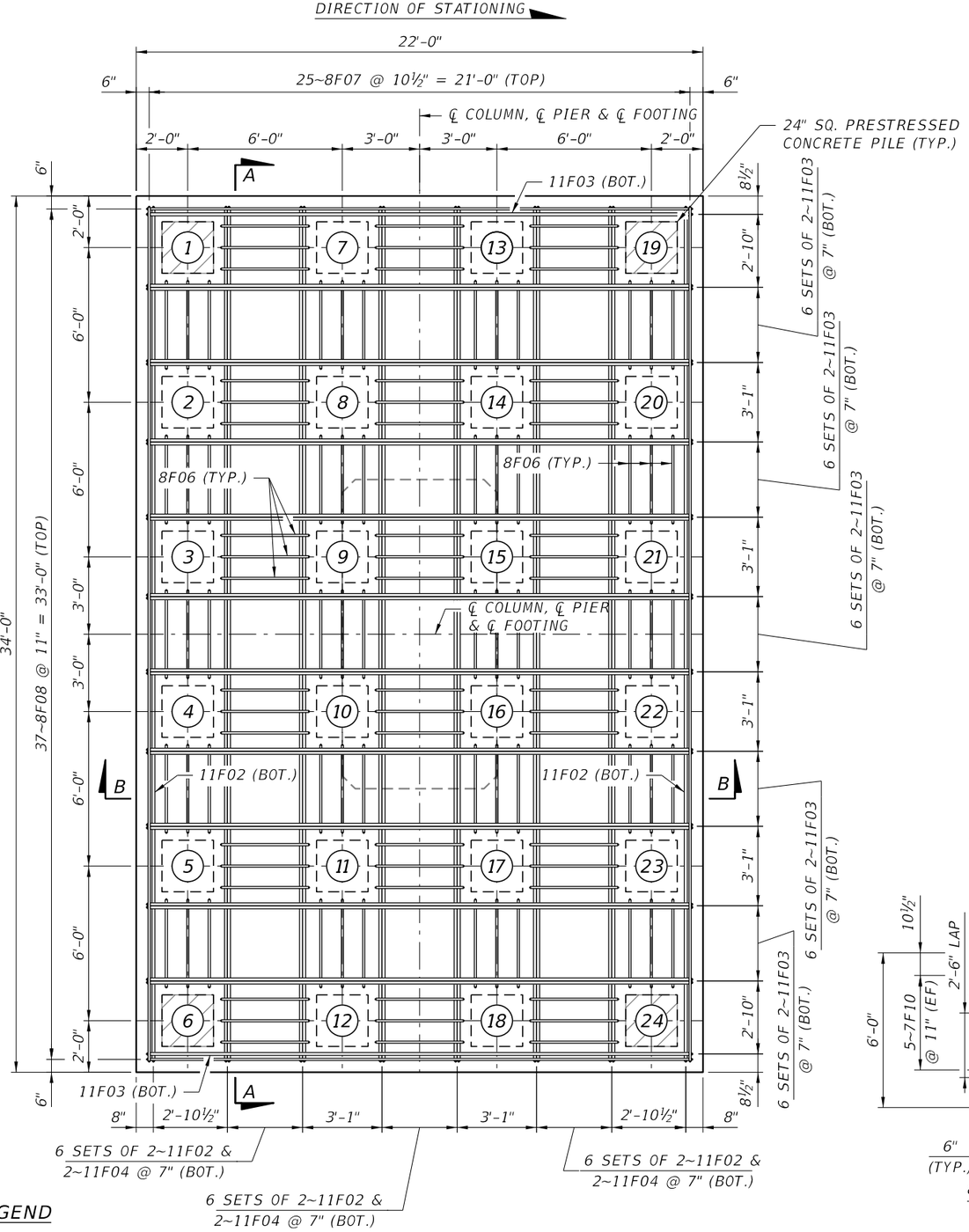

LEGEND

PILE WITH UPLIFT

FOOTING PLAN

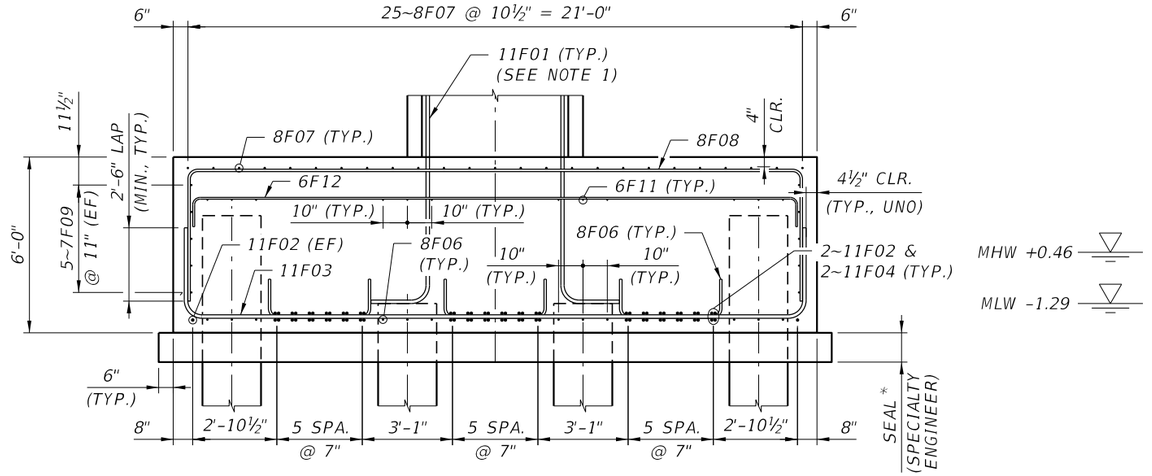

SECTION B-B

* SEAL NOT REQUIRED FOR PIERS 12 THRU 14.

NOTES:

1. MATCH 11F01 BARS TO 11P07 BARS ON PIERS 3, 4 ,13 & 14, AND MATCH 11F01 BARS TO 11P01 BARS ON PIERS 5 & 12.
2. PILES 9, 10, 15 AND 16 ARE EMBEDDED 1'-0". ALL OTHER PILES ARE EMBEDDED 4'-0".
3. FOOTING IS MASS CONCRETE.

TABLE OF PILE CUT-OFF ELEVATIONS		
PIER	PILE NUMBER	CUT-OFF ELEV.
3, 4 & 5	1-8, 11-14, 17-24	1.7
	9, 10, 15 & 16	-1.3
12	1-8, 11-14, 17-24	2.5
	9, 10, 15 & 16	-0.5
13 & 14	1-8, 11-14, 17-24	0.0
	9, 10, 15 & 16	-3.0

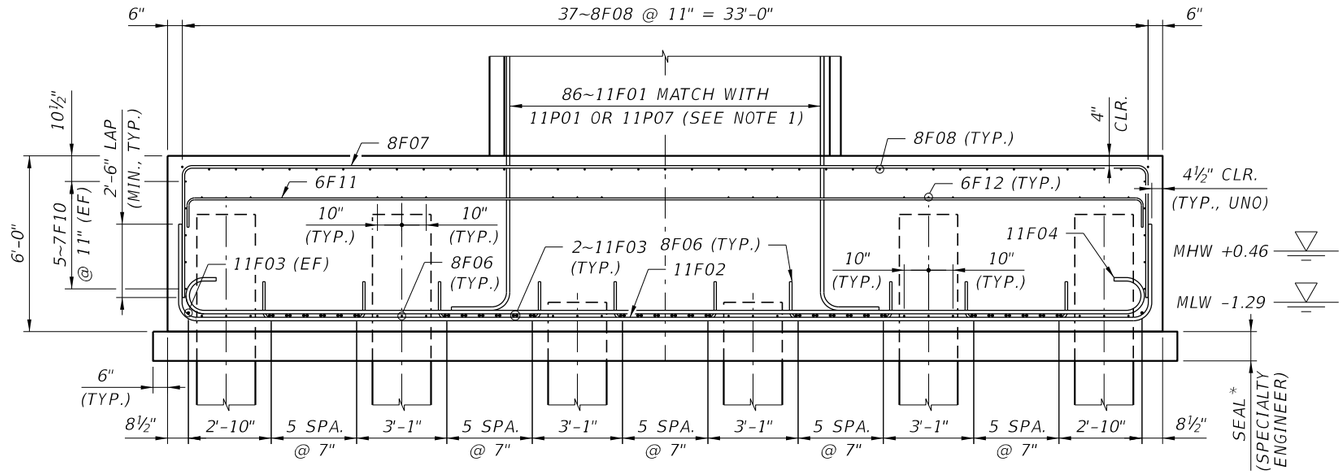

SECTION A-A

* SEAL NOT REQUIRED FOR PIERS 12 THRU 14.

BRIDGE NO. 124143

NOTICE: THE OFFICIAL RECORD OF THIS SHEET IS THE ELECTRONIC FILE DIGITALLY SIGNED AND SEALED UNDER RULE 61G15-23.004, F.A.C.

REVISIONS

DATE	BY	DESCRIPTION	DATE	BY	DESCRIPTION

Kisinger Campo & Associates Corp.
201 N. Franklin Street
Suite 400
Tampa, FL 33602
Alfredo Jose Layrisse, PE No. 75610

DRAWN BY: SKB 10-20
CHECKED BY: JHJ 04-21
DESIGNED BY: JHJ 07-20
CHECKED BY: SKB 10-20

LEE COUNTY PUBLIC WORKS
DEPARTMENT OF TRANSPORTATION

ROAD NO.	COUNTY	COUNTY PROJECT No
CR 865	LEE	CN160002

SHEET TITLE: FOOTING CAP REINFORCING PIERS 3, 4, 5 & 12 THRU 14

REF. DWG. NO.:

PROJECT NAME: ESTERO BLVD. (CR 865) OVER BIG CARLOS PASS

SHEET NO.: B1-51

jhanna 2/24/2022 3:17:08 PM c:\pwworkingdir\kca-pw.bentley.com_kca-pw-01\josh hanna\dms00783\B1Footing02.dgn

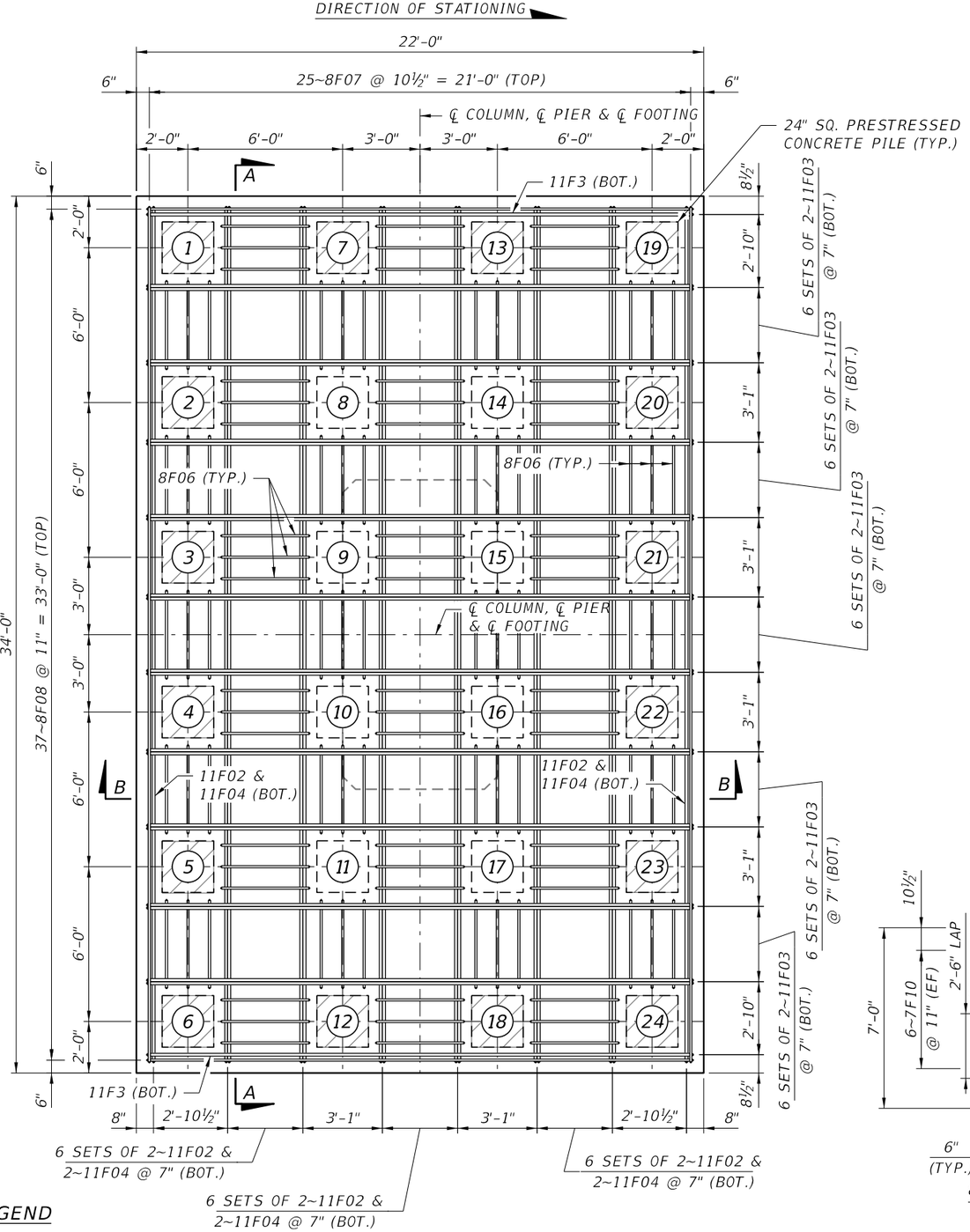

LEGEND

PILE WITH UPLIFT

FOOTING PLAN

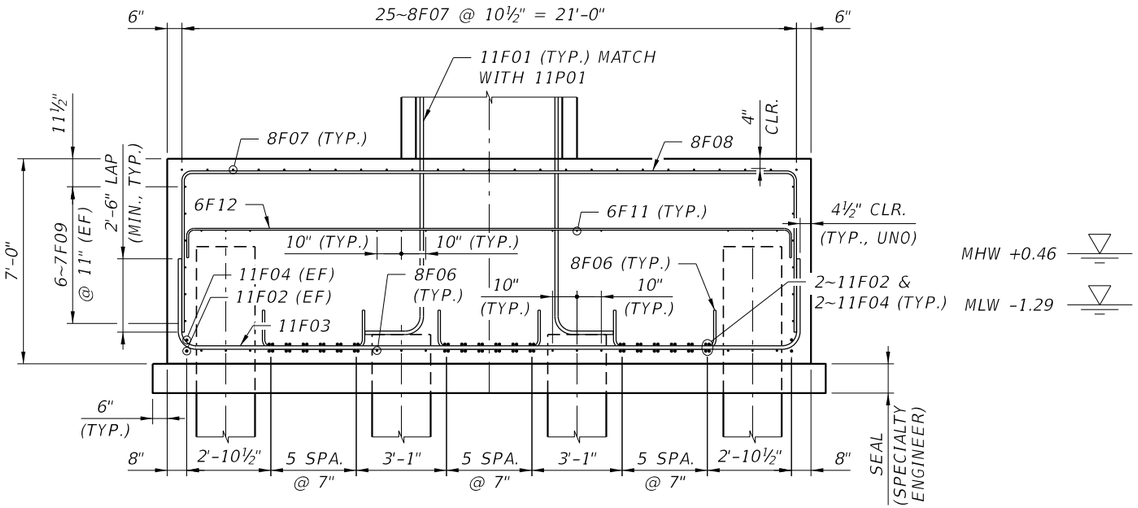

SECTION B-B

NOTES:

1. PILES 9, 10, 15 AND 16 ARE EMBEDDED 1'-0". ALL OTHER PILES ARE EMBEDDED 4'-0".
2. FOOTING IS MASS CONCRETE.

TABLE OF PILE CUT-OFF ELEVATIONS		
PIER	PILE NUMBER	CUT-OFF ELEV.
6, 7, & 8	1-8, 11-14, 17-24	0.7
	9, 10, 15 & 16	-2.3

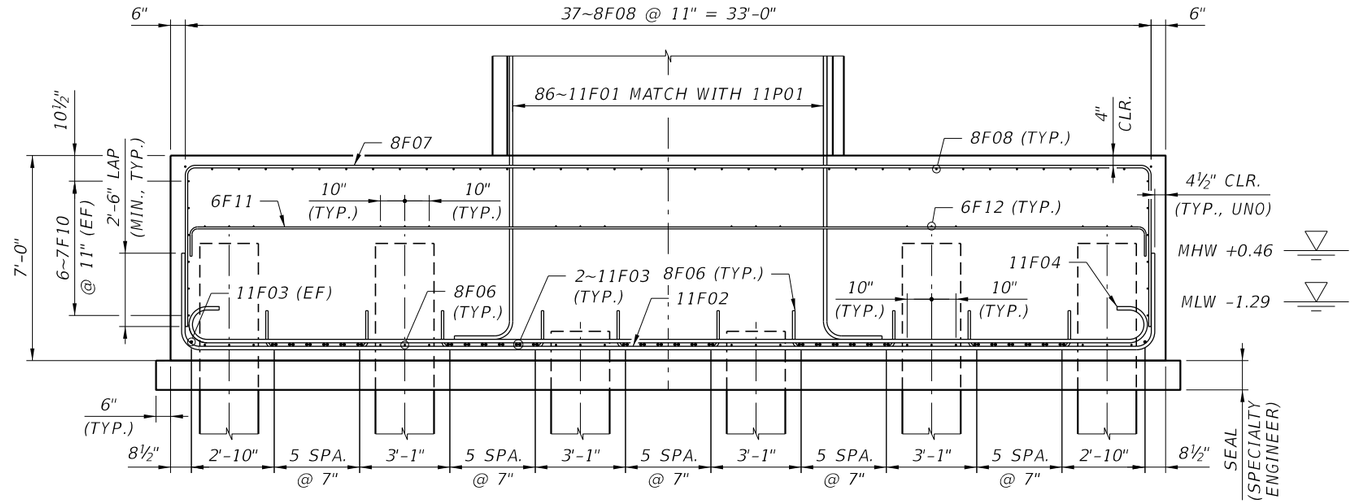

SECTION A-A

BRIDGE NO. 124143

REVISIONS					
DATE	BY	DESCRIPTION	DATE	BY	DESCRIPTION

Kisinger Campo & Associates Corp.
201 N. Franklin Street
Suite 400
Tampa, FL 33602
Alfredo Jose Layrisse, PE No. 75610

DRAWN BY:	SKB 10-20
CHECKED BY:	JHJ 04-21
DESIGNED BY:	JHJ 07-20
CHECKED BY:	SKB 10-20

LEE COUNTY PUBLIC WORKS
DEPARTMENT OF TRANSPORTATION

ROAD NO.	COUNTY	COUNTY PROJECT No
CR 865	LEE	CN160002

SHEET TITLE: FOOTING CAP REINFORCING PIERS 6, 7 & 8

REF. DWG. NO.

PROJECT NAME: ESTERO BLVD. (CR 865) OVER BIG CARLOS PASS

SHEET NO. B1-52

NOTICE: THE OFFICIAL RECORD OF THIS SHEET IS THE ELECTRONIC FILE DIGITALLY SIGNED AND SEALED UNDER RULE 61G15-23.004, F.A.C.

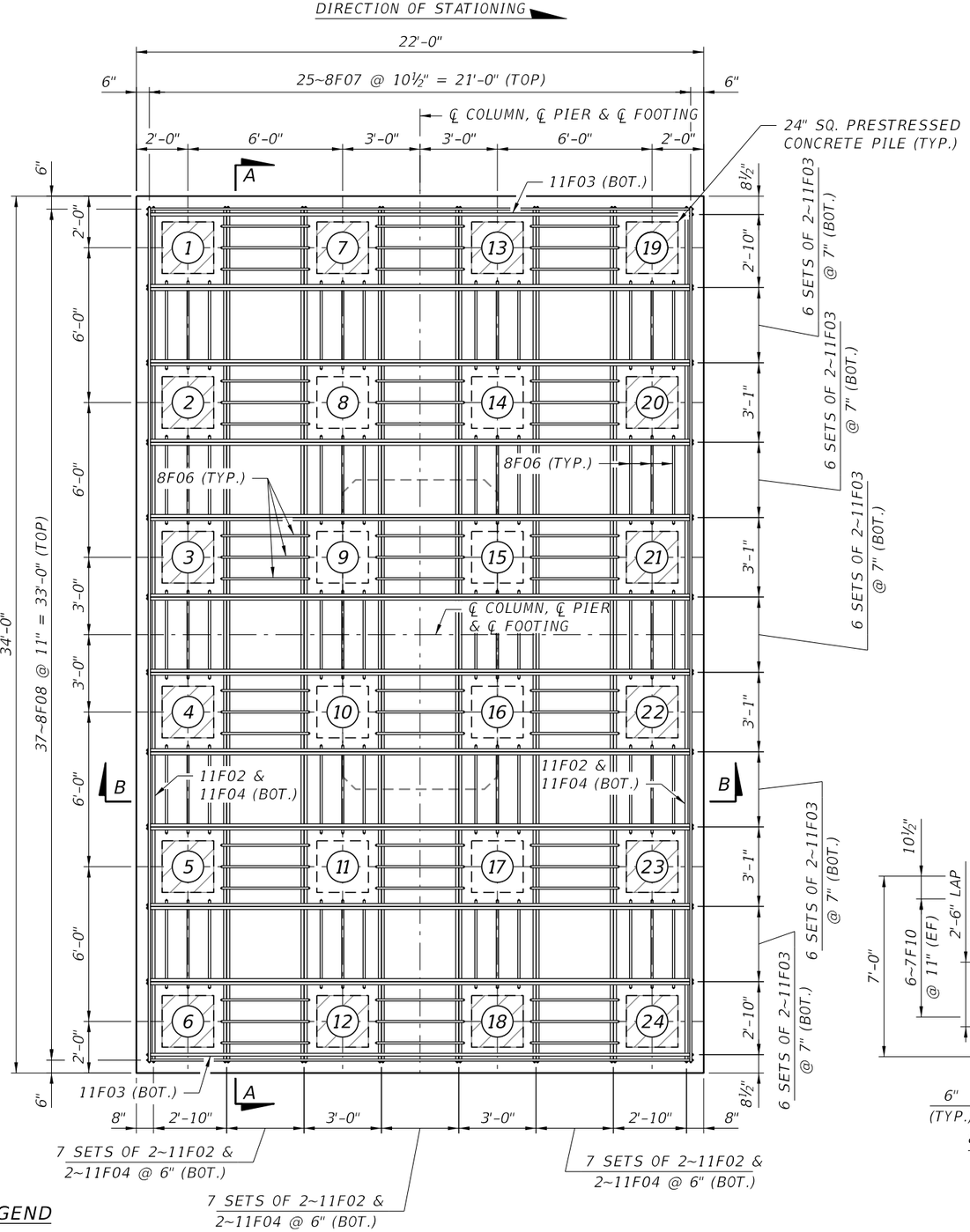

FOOTING PLAN

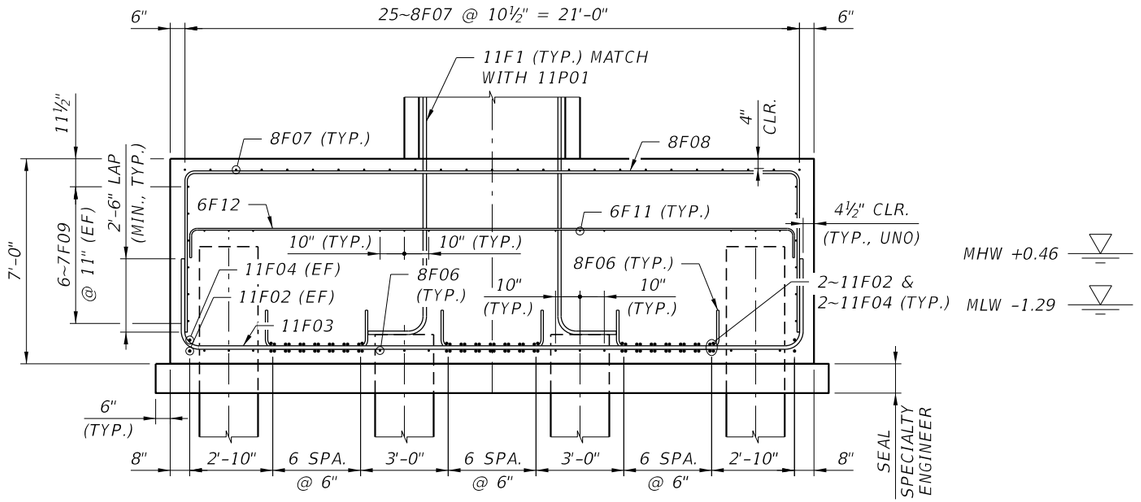

SECTION B-B

NOTES:

1. PILES 9, 10, 15 AND 16 ARE EMBEDDED 1'-0". ALL OTHER PILES EMBEDDED ARE 4'-0".
2. FOOTING IS MASS CONCRETE.
3. FOR SUPPLEMENTAL REINFORCING FOR FISHING PIER SEE FISHING PIER PLANS.

TABLE OF PILE CUT-OFF ELEVATIONS		
PIER	PILE NUMBER	CUT-OFF ELEV.
9	1-8, 11-14, 17-24	0.7
	9, 10, 15 & 16	-2.3

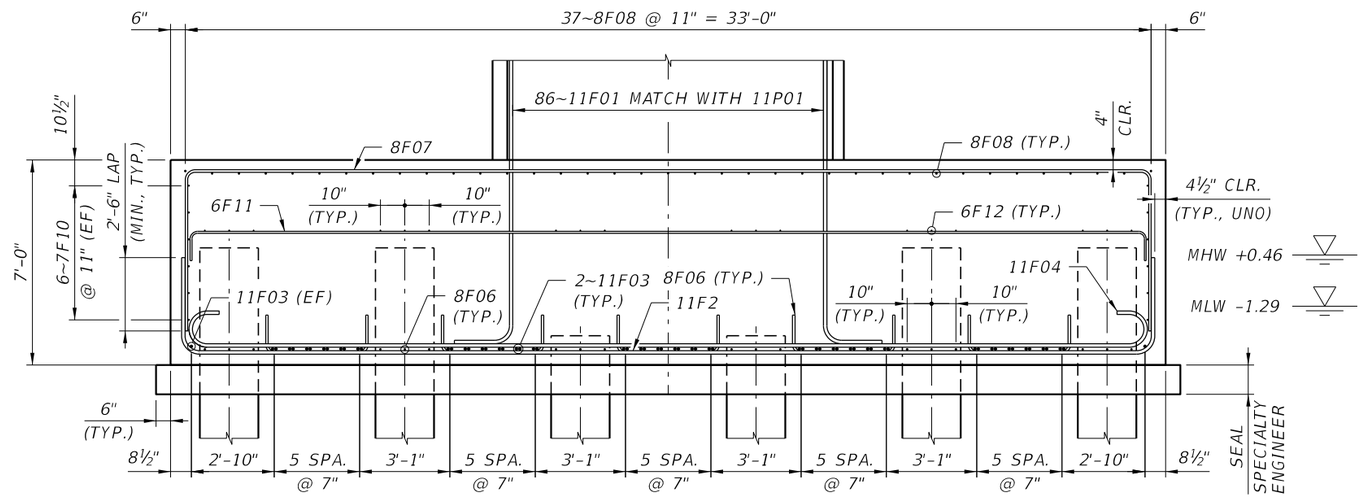

SECTION A-A

LEGEND

PILE WITH UPLIFT

BRIDGE NO. 124143

NOTICE: THE OFFICIAL RECORD OF THIS SHEET IS THE ELECTRONIC FILE DIGITALLY SIGNED AND SEALED UNDER RULE 61G15-23.004, F.A.C.

REVISIONS					
DATE	BY	DESCRIPTION	DATE	BY	DESCRIPTION

Kisinger Campo & Associates Corp.
201 N. Franklin Street
Suite 400
Tampa, FL 33602
Alfredo Jose Layrisse, PE No. 75610

DRAWN BY:	CHECKED BY:	DESIGNED BY:	CHECKED BY:
SKB 10-20	JHJ 04-21	JHJ 07-20	SKB 10-20

LEE COUNTY PUBLIC WORKS
DEPARTMENT OF TRANSPORTATION

ROAD NO.	COUNTY	COUNTY PROJECT No
CR 865	LEE	CN160002

SHEET TITLE: FOOTING CAP REINFORCING PIER 9

REF. DWG. NO.:

PROJECT NAME: ESTERO BLVD. (CR 865) OVER BIG CARLOS PASS

SHEET NO.: B1-53

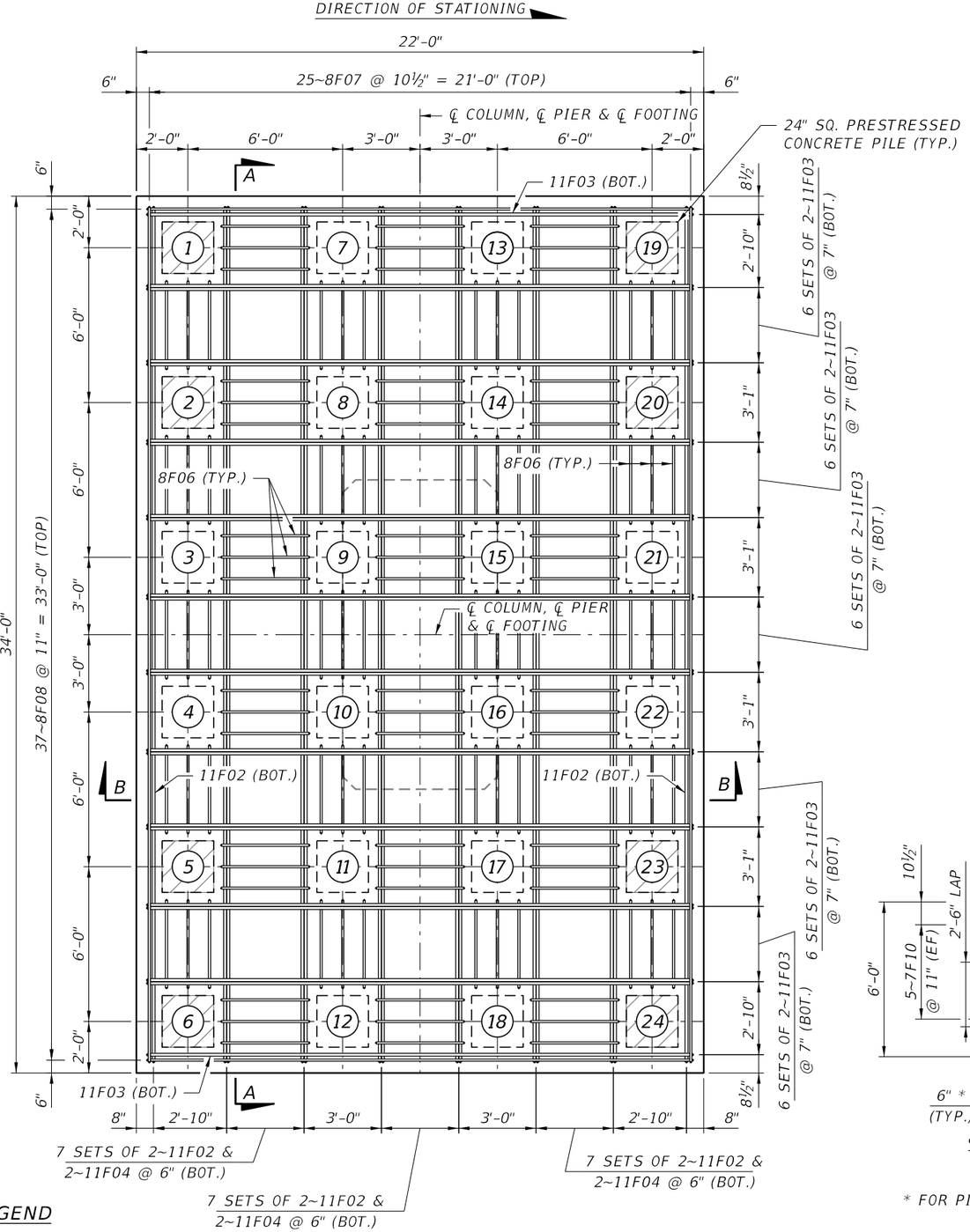

LEGEND

PILE WITH UPLIFT

FOOTING PLAN

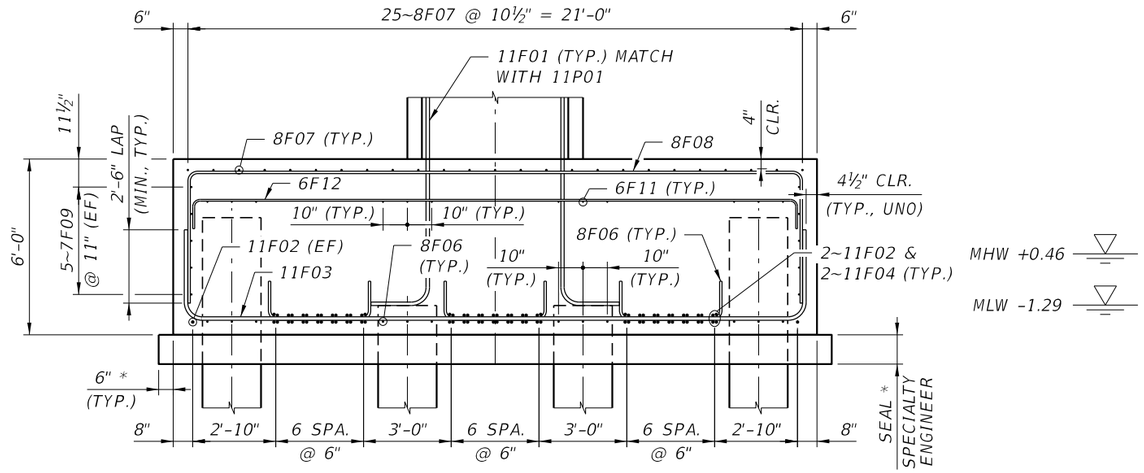

* FOR PIER 10 ONLY

SECTION B-B

NOTES:

1. PILES 9, 10, 15 AND 16 EMBEDDED 1'-0". ALL OTHER PILES EMBEDDED 4'-0".
2. FOOTING IS MASS CONCRETE.
3. FOR SUPPLEMENTAL REINFORCING FOR FISHING PIER SEE FISHING PIER PLANS.

TABLE OF PILE CUT-OFF ELEVATIONS		
PIER	PILE NUMBER	CUT-OFF ELEV.
10 & 11	1-8, 11-14, 17-24	1.7
	9, 10, 15 & 16	-1.3

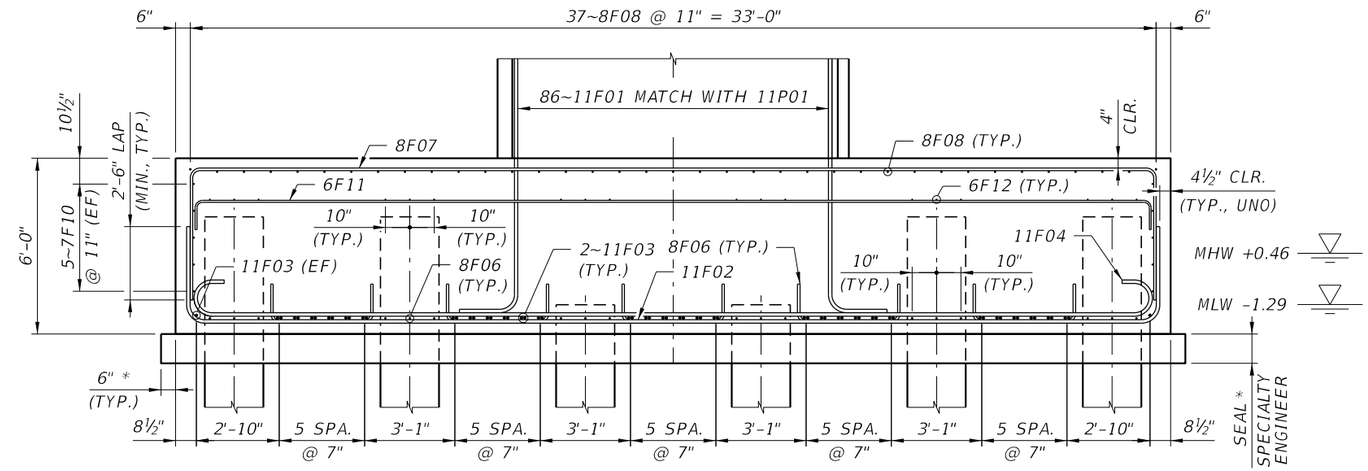

* FOR PIER 10 ONLY

SECTION A-A

BRIDGE NO. 124143

REVISIONS					
DATE	BY	DESCRIPTION	DATE	BY	DESCRIPTION

Kisinger Campo & Associates Corp.
201 N. Franklin Street
Suite 400
Tampa, FL 33602
Alfredo Jose Layrisse, PE No. 75610

DRAWN BY:	SKB 10-20
CHECKED BY:	JHJ 04-21
DESIGNED BY:	JHJ 07-20
CHECKED BY:	SKB 10-20

LEE COUNTY PUBLIC WORKS
DEPARTMENT OF TRANSPORTATION

ROAD NO.	COUNTY	COUNTY PROJECT No
CR 865	LEE	CN160002

SHEET TITLE: FOOTING CAP REINFORCING PIERS 10 & 11

REF. DWG. NO.:

PROJECT NAME: ESTERO BLVD. (CR 865) OVER BIG CARLOS PASS

SHEET NO.: B1-54

NOTICE: THE OFFICIAL RECORD OF THIS SHEET IS THE ELECTRONIC FILE DIGITALLY SIGNED AND SEALED UNDER RULE 61G15-23.004, F.A.C.

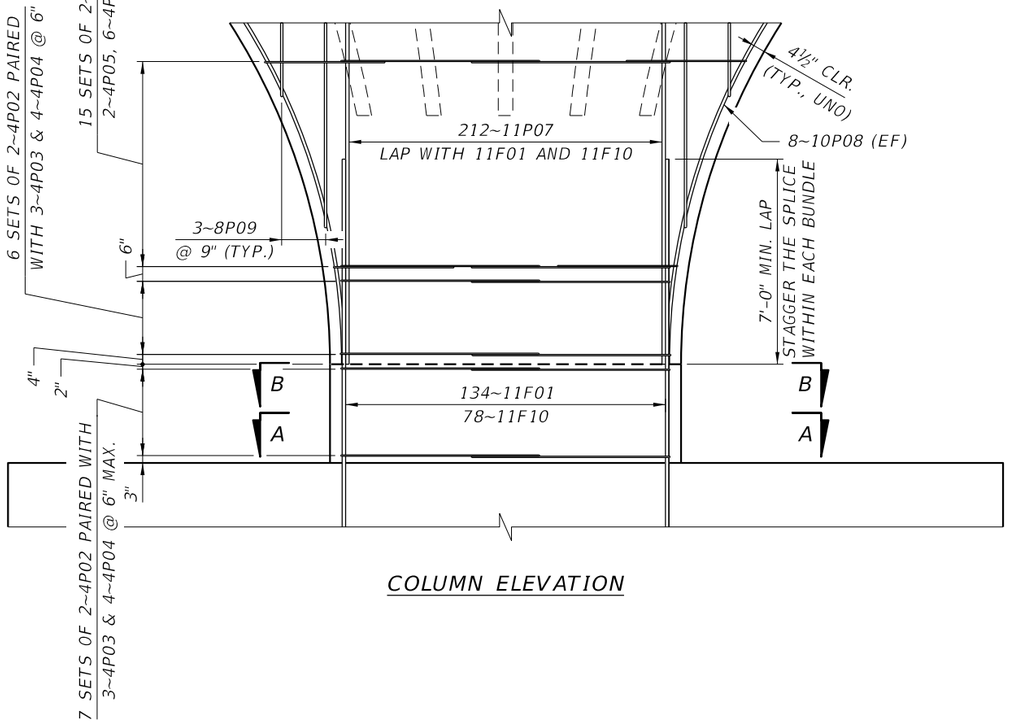

COLUMN ELEVATION

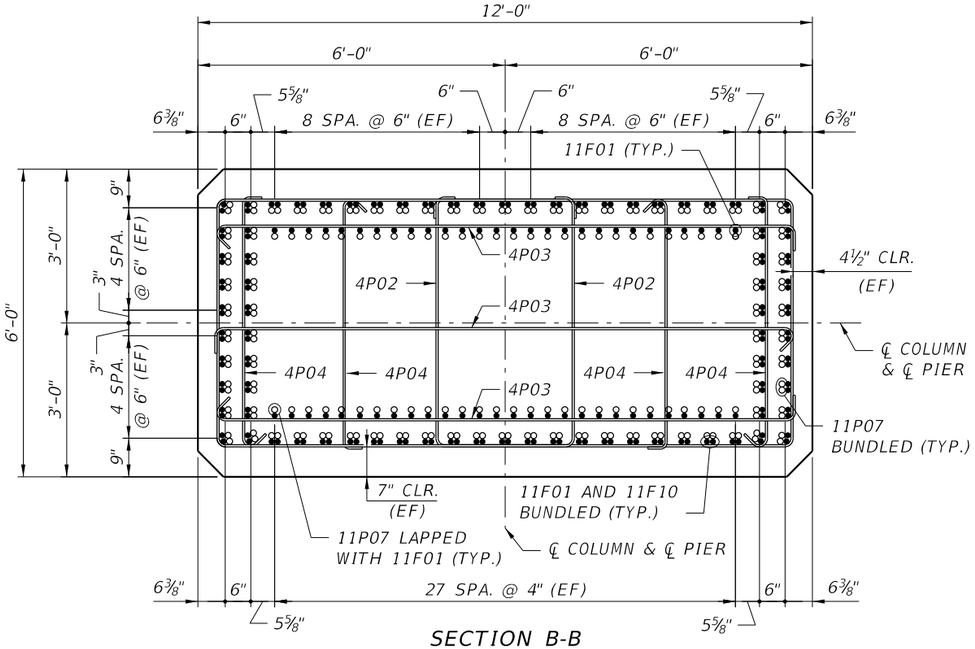

SECTION B-B

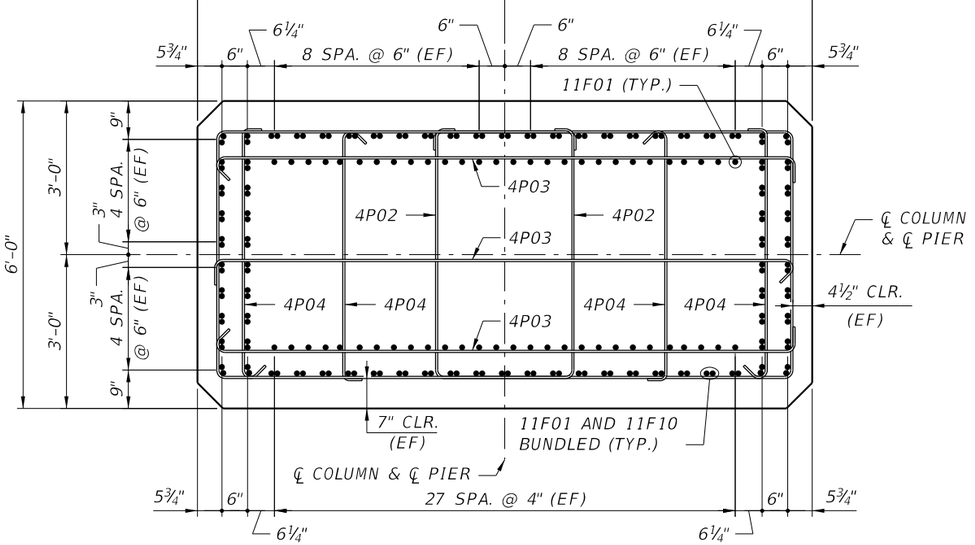

SECTION A-A

BRIDGE NO. 124143

NOTICE: THE OFFICIAL RECORD OF THIS SHEET IS THE ELECTRONIC FILE DIGITALLY SIGNED AND SEALED UNDER RULE 61G15-23.004, F.A.C.

REVISIONS

DATE	BY	DESCRIPTION	DATE	BY	DESCRIPTION

Kisinger Campo & Associates Corp.
201 N. Franklin Street
Suite 400
Tampa, FL 33602
Alfredo Jose Layrisse, PE No. 75610

DRAWN BY:	SKB 10-20
CHECKED BY:	JHJ 04-21
DESIGNED BY:	JHJ 07-20
CHECKED BY:	SKB 10-20

LEE COUNTY PUBLIC WORKS
DEPARTMENT OF TRANSPORTATION

ROAD NO.	COUNTY	COUNTY PROJECT No
CR 865	LEE	CN160002

SHEET TITLE: COLUMN REINFORCING PIER 2

REF. DWG. NO.:

PROJECT NAME: ESTERO BLVD. (CR 865) OVER BIG CARLOS PASS

SHEET NO.: B1-55

jhanna 2/24/2022 3:17:22 PM c:\pwworkingdir\kca-pw.bentley.com_kca-pw-01\josh hanna\dms00783\B1PierDet01.dgn

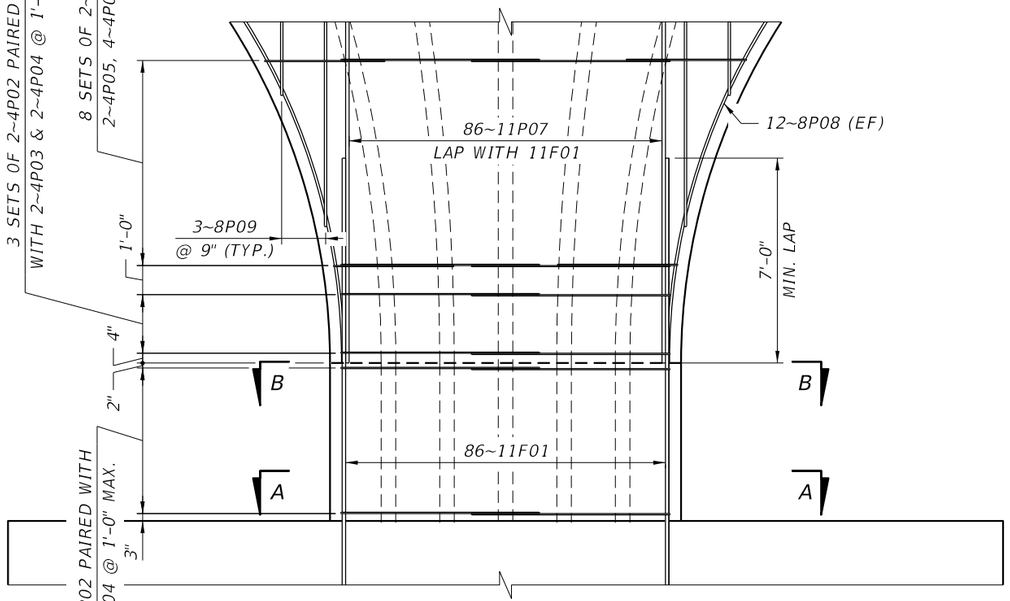

COLUMN ELEVATION
(PIER 4 SHOWN, PIER 13 SIMILAR)

COLUMN REINFORCING DATA	
PIER	'Z' SETS OF COLUMN TIES
4	6
13	3

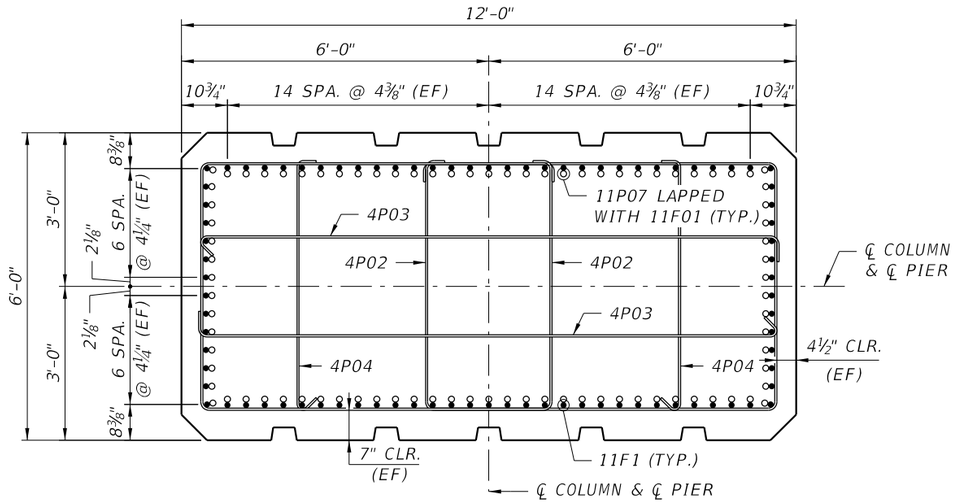

SECTION B-B

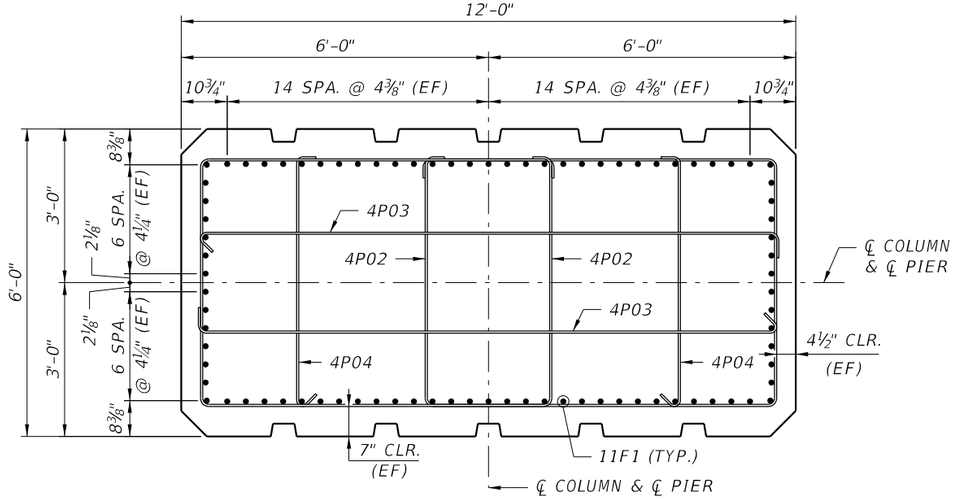

SECTION A-A

BRIDGE NO. 124143

NOTICE: THE OFFICIAL RECORD OF THIS SHEET IS THE ELECTRONIC FILE DIGITALLY SIGNED AND SEALED UNDER RULE 61G15-23.004, F.A.C.

REVISIONS

DATE	BY	DESCRIPTION	DATE	BY	DESCRIPTION

Kisinger Campo & Associates Corp.
201 N. Franklin Street
Suite 400
Tampa, FL 33602
Alfredo Jose Layrisse, PE No. 75610

DRAWN BY: SKB 10-20
CHECKED BY: JHJ 04-21
DESIGNED BY: JHJ 07-20
CHECKED BY: SKB 10-20

LEE COUNTY PUBLIC WORKS
DEPARTMENT OF TRANSPORTATION

ROAD NO.	COUNTY	COUNTY PROJECT No
CR 865	LEE	CN160002

SHEET TITLE: COLUMN REINFORCING PIERS 4 & 13

REF. DWG. NO.:

PROJECT NAME: ESTERO BLVD. (CR 865) OVER BIG CARLOS PASS

SHEET NO.: B1-56

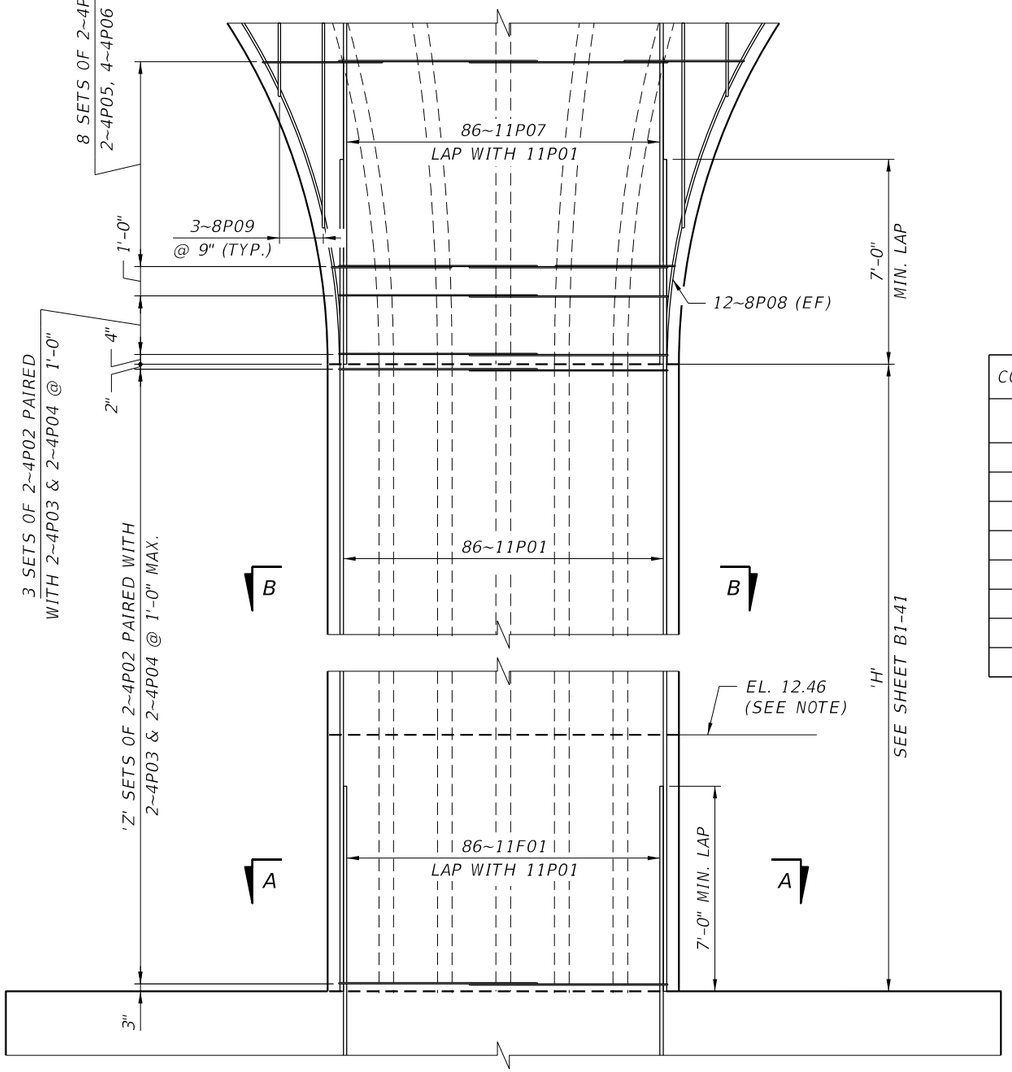

COLUMN ELEVATION

COLUMN REINFORCING DATA	
PIER	'Z' SETS OF COLUMN TIES
5	14
6	22
7	29
8	31
9	26
10	21
11	13
12	8

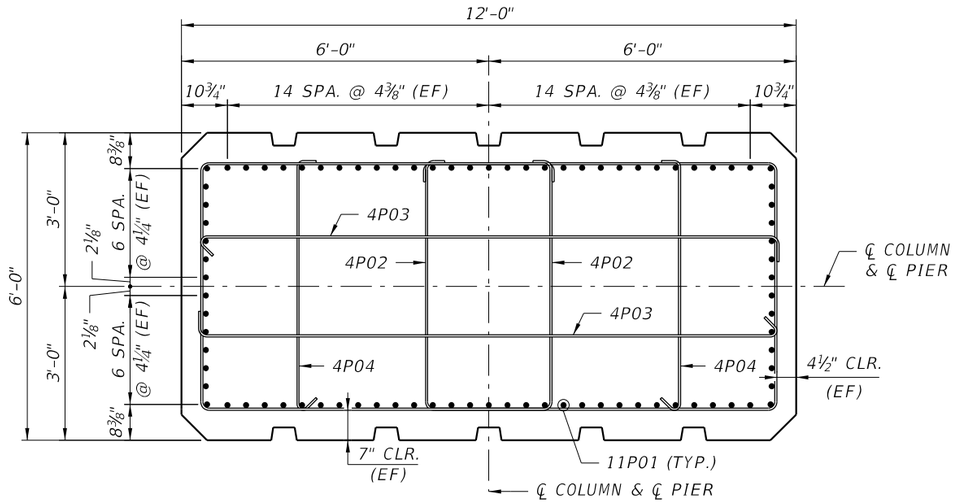

SECTION B-B

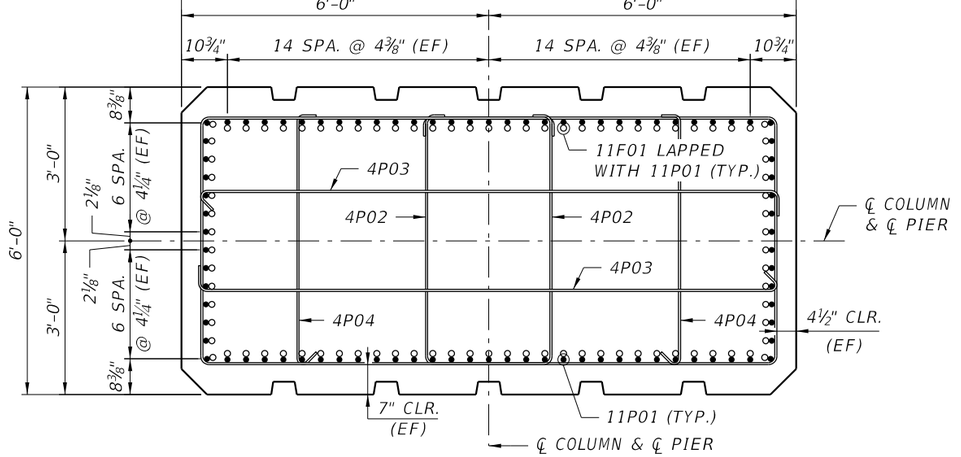

SECTION A-A

NOTE:

CONSTRUCTION JOINT REQUIRED FOR PIERS 7 & 8.
CONTRUCTION JOINT OPTIONAL FOR ALL OTHER PIERS.
SEE GENERAL NOTES FOR CONCRETE IN SPLASH ZONE FOR ADDITIONAL INFORMATION.

BRIDGE NO. 124143

NOTICE: THE OFFICIAL RECORD OF THIS SHEET IS THE ELECTRONIC FILE DIGITALLY SIGNED AND SEALED UNDER RULE 61G15-23.004, F.A.C.

REVISIONS					
DATE	BY	DESCRIPTION	DATE	BY	DESCRIPTION

Kisinger Campo & Associates Corp.
201 N. Franklin Street
Suite 400
Tampa, FL 33602
Alfredo Jose Layrisse, PE No. 75610

DRAWN BY:	SKB 10-20
CHECKED BY:	JHJ 04-21
DESIGNED BY:	JHJ 07-20
CHECKED BY:	SKB 10-20

LEE COUNTY PUBLIC WORKS
DEPARTMENT OF TRANSPORTATION

ROAD NO.	COUNTY	COUNTY PROJECT No
CR 865	LEE	CN160002

SHEET TITLE: COLUMN REINFORCING PIERS 5 THRU 12

REF. DWG. NO.:

PROJECT NAME: ESTERO BLVD. (CR 865) OVER BIG CARLOS PASS

SHEET NO.: B1-57

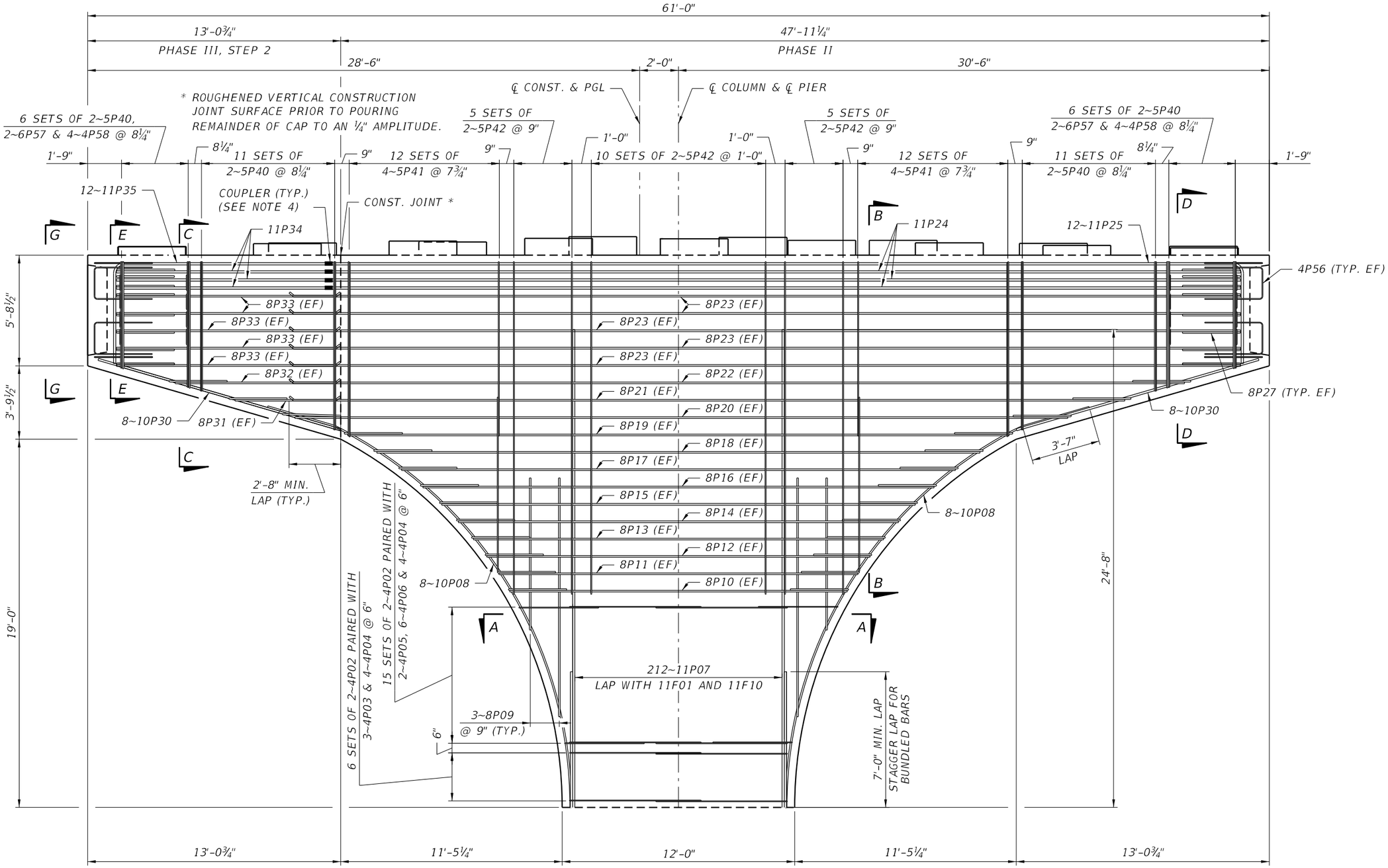

NOTES:

1. PEDESTAL REINFORCING NOT SHOWN FOR CLARITY.
2. SHEAR BLOCKS & SHEAR BLOCK REINFORCING NOT SHOWN FOR CLARITY.
3. SHIFT STIRRUPS AS NECESSARY TO AVOID CONFLICT WITH BARS 11P07.
4. VERIFY AND ADJUST BAR LENGTH DEPENDING ON COUPLER TYPE USED AND LOCATION OF STIRRUPS.

PIER CAP ELEVATION

CROSS REFERENCES:

1. FOR PIER AND PEDESTAL ELEVATIONS AND PEDESTAL AND SHEAR BLOCK SPACING, SEE SHEET B1-39 AND B1-43.
2. FOR COLUMN REINFORCING, SEE SHEET B1-55.
3. FOR SECTION VIEWS AND REINFORCING DETAILS, SEE SHEET B1-59.

BRIDGE NO. 124143

REVISIONS					
DATE	BY	DESCRIPTION	DATE	BY	DESCRIPTION

Kisinger Campo & Associates Corp.
201 N. Franklin Street
Suite 400
Tampa, FL 33602
Alfredo Jose Layrisse, PE No. 75610

DRAWN BY: SKB 10-20
CHECKED BY: JHJ 04-21
DESIGNED BY: JHJ 07-20
CHECKED BY: SKB 10-20

LEE COUNTY PUBLIC WORKS
DEPARTMENT OF TRANSPORTATION

ROAD NO.	COUNTY	COUNTY PROJECT No
CR 865	LEE	CN160002

SHEET TITLE: PIER CAP REINFORCING PIER 2

REF. DWG. NO.:

PROJECT NAME: ESTERO BLVD. (CR 865) OVER BIG CARLOS PASS

SHEET NO.: B1-58

NOTICE: THE OFFICIAL RECORD OF THIS SHEET IS THE ELECTRONIC FILE DIGITALLY SIGNED AND SEALED UNDER RULE 61G15-23.004, F.A.C.

jhanna 2/24/2022 3:17:31 PM c:\pwworkingdir\kca-pw.bentley.com_kca-pw-01\josh hanna\dms00783\B1PierDet05.dgn

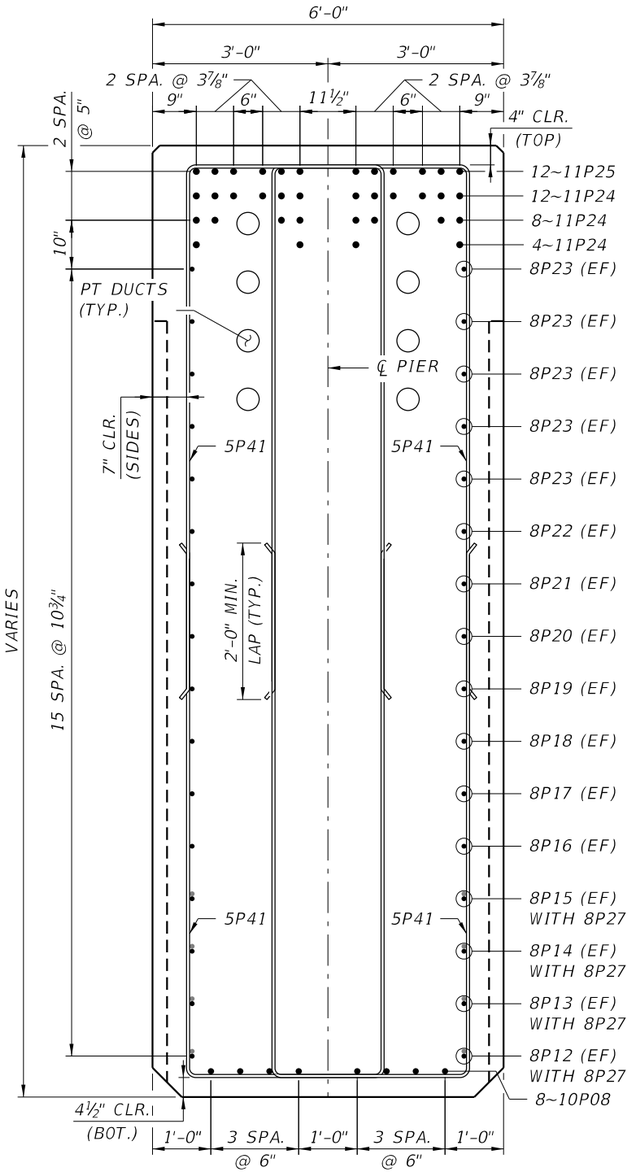

SECTION B-B

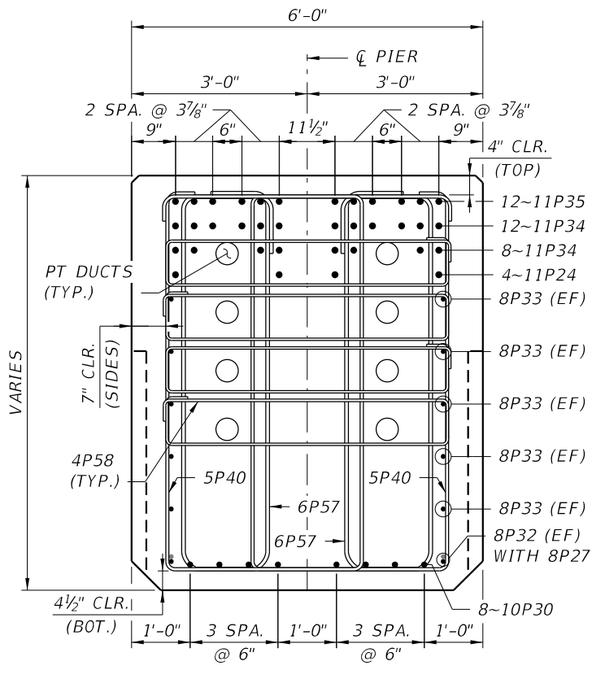

SECTION C-C

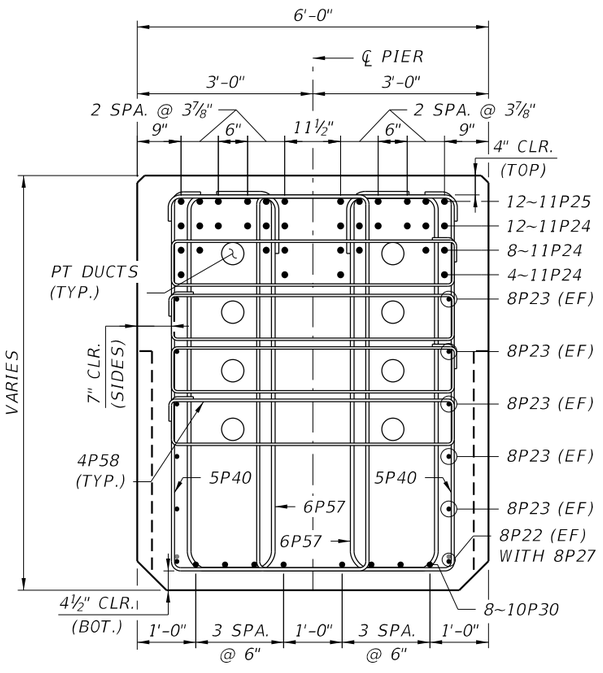

SECTION D-D

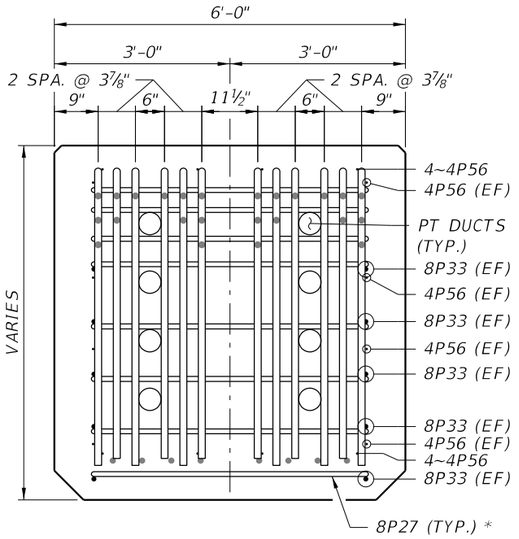

SECTION E-E

* MATCH WITH LONGITUDINAL REINFORCING

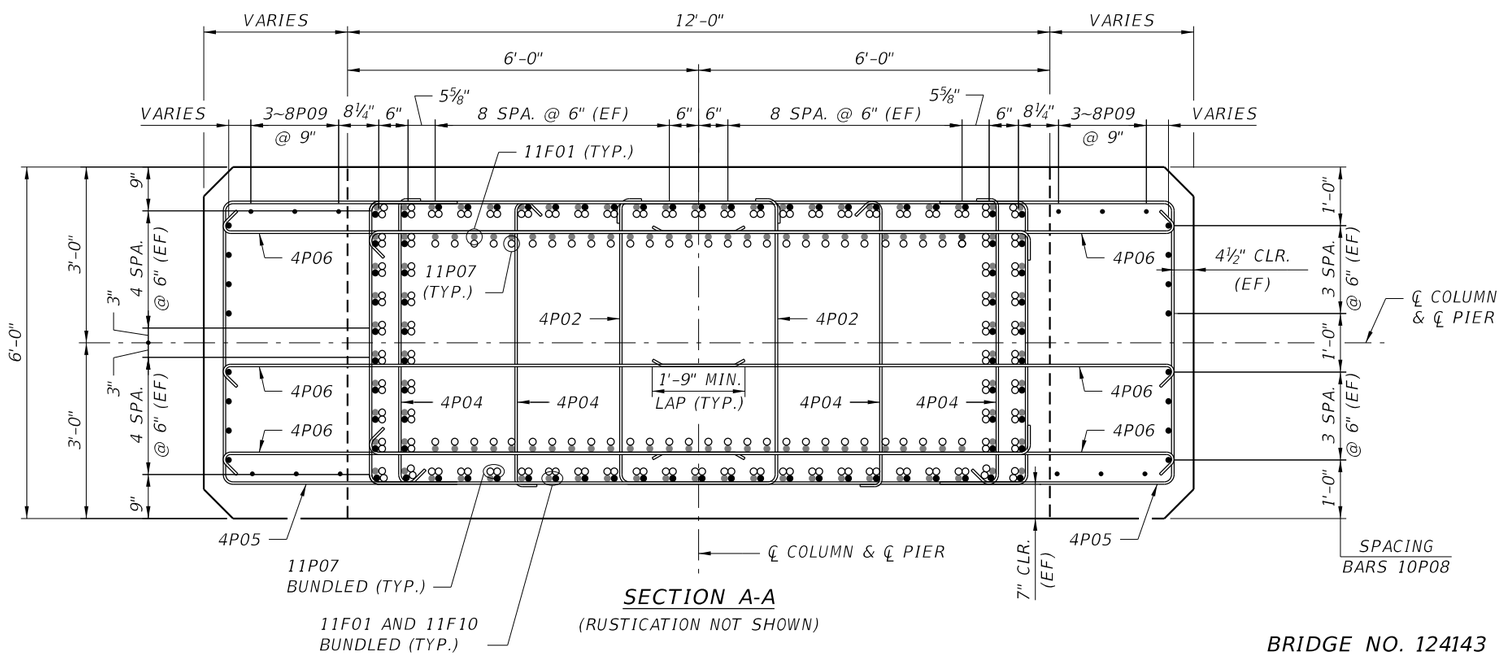

SECTION A-A

(RUSTICATION NOT SHOWN)

NOTES:

1. PEDESTALS & PEDESTAL REINFORCING NOT SHOWN FOR CLARITY.
2. SHEAR BLOCKS & SHEAR BLOCK REINFORCING NOT SHOWN FOR CLARITY.

CROSS REFERENCES:

1. FOR LOCATIONS OF SECTION VIEWS SEE SHEET B1-58.
2. FOR PEDESTAL AND SHEAR BLOCK DEATILS, SEE SHEET B1-49.

BRIDGE NO. 124143

NOTICE: THE OFFICIAL RECORD OF THIS SHEET IS THE ELECTRONIC FILE DIGITALLY SIGNED AND SEALED UNDER RULE 61G15-23.004, F.A.C.

REVISIONS					
DATE	BY	DESCRIPTION	DATE	BY	DESCRIPTION

Kisinger Campo & Associates Corp.
201 N. Franklin Street
Suite 400
Tampa, FL 33602
Alfredo Jose Layrisse, PE No. 75610

DRAWN BY: SKB 10-20
CHECKED BY: JHJ 04-21
DESIGNED BY: JHJ 07-20
CHECKED BY: SKB 10-20

LEE COUNTY PUBLIC WORKS DEPARTMENT OF TRANSPORTATION

ROAD NO.	COUNTY	COUNTY PROJECT No
CR 865	LEE	CN160002

SHEET TITLE: PIER CAP REINFORCING DETAILS - PIER 2 (1 OF 3)

REF. DWG. NO.

PROJECT NAME: ESTERO BLVD. (CR 865) OVER BIG CARLOS PASS

SHEET NO. B1-59

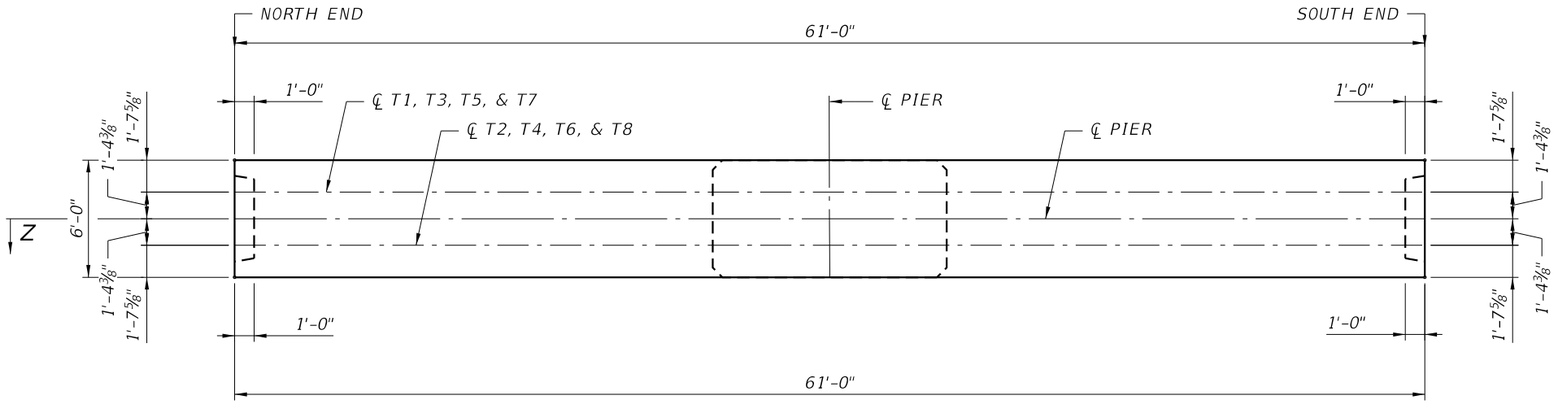

PLAN - TENDONS 1 THRU 8
(PEDESTALS NOT SHOWN FOR CLARITY)

DIRECTION OF STATIONING

TENDON COORDINATES			
TENDON	DIR.	NORTH ANCHOR	SOUTH ANCHOR
T1	X	-29.500'	29.500'
	Y	1.333'	1.333'
	Z	-1.365	-1.365
T2	X	-29.500'	29.500'
	Y	1.333'	1.333'
	Z	1.365'	1.365'
T3	X	-29.500'	29.500'
	Y	2.333'	2.333'
	Z	-1.365	-1.365
T4	X	-29.500'	29.500'
	Y	2.333'	2.333'
	Z	1.365'	1.365'
T5	X	-29.500'	29.500'
	Y	3.333'	3.333'
	Z	-1.365	-1.365
T6	X	-29.500'	29.500'
	Y	3.333'	3.333'
	Z	1.365'	1.365'
T7	X	-29.500'	29.500'
	Y	4.333'	4.333'
	Z	-1.365	-1.365
T8	X	-29.500'	29.500'
	Y	4.333'	4.333'
	Z	1.365'	1.365'

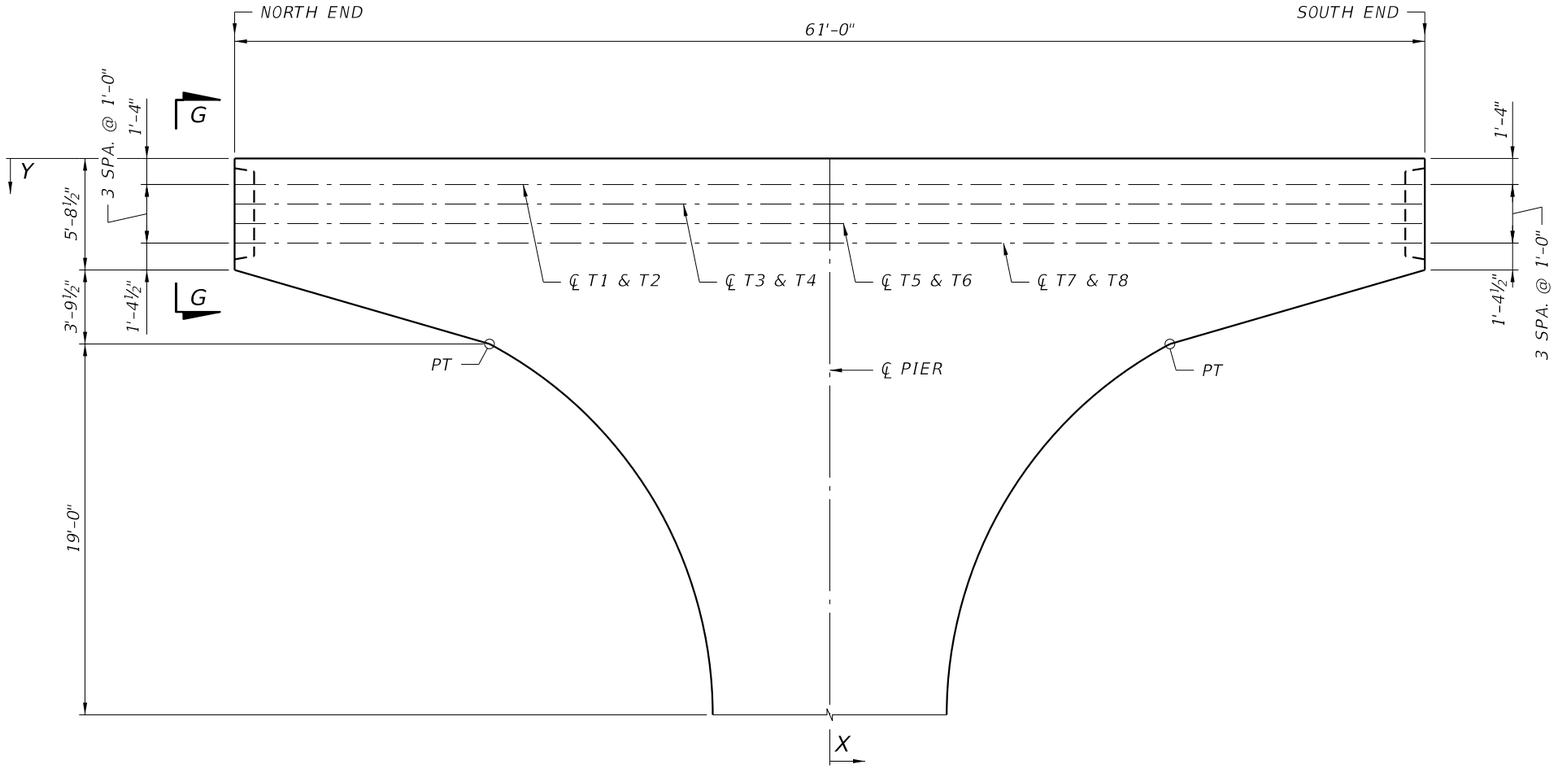

ELEVATION - TENDON PROFILE
(PEDESTALS NOT SHOWN FOR CLARITY)

NOTE:
FOR SECTION G-G, SEE PIER CAP REINFORCING DETAILS - PIER 2 (3 OF 3) SHEET.

BRIDGE NO. 124143

NOTICE: THE OFFICIAL RECORD OF THIS SHEET IS THE ELECTRONIC FILE DIGITALLY SIGNED AND SEALED UNDER RULE 61G15-23.004, F.A.C.

REVISIONS					
DATE	BY	DESCRIPTION	DATE	BY	DESCRIPTION

Kisinger Campo & Associates Corp.
201 N. Franklin Street
Suite 400
Tampa, FL 33602
Alfredo Jose Layrisse, PE No. 75610

DRAWN BY: FMV 01-22	
CHECKED BY: AJL 01-22	
DESIGNED BY: FMV 01-22	
CHECKED BY: DAA 01-22	

LEE COUNTY PUBLIC WORKS
DEPARTMENT OF TRANSPORTATION

ROAD NO.	COUNTY	COUNTY PROJECT No
CR 865	LEE	CN160002

SHEET TITLE: PIER CAP REINFORCING DETAILS - PIER 2 (2 OF 3)

REF. DWG. NO.:

PROJECT NAME: ESTERO BLVD. (CR 865) OVER BIG CARLOS PASS

SHEET NO.: B1-60

jhanna 2/24/2022 3:17:38 PM c:\pwworkingdir\kca-pw.bentley.com_kca-pw-01\josh hanna\dms00783\B1PierDet14.DGN

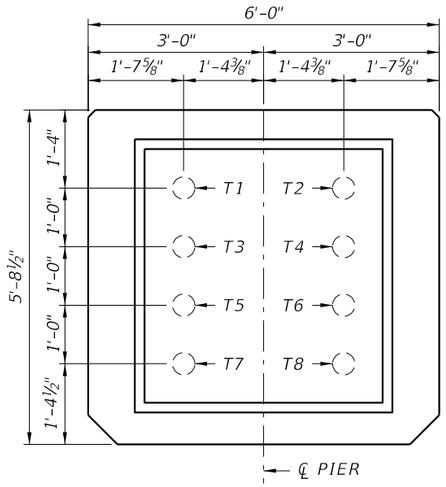

VIEW G-G

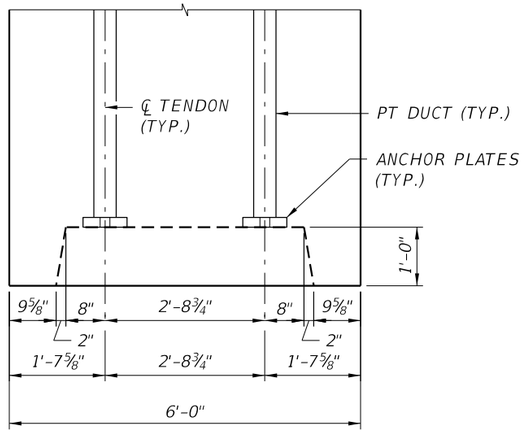

BLOCKOUT DETAILS - PLAN

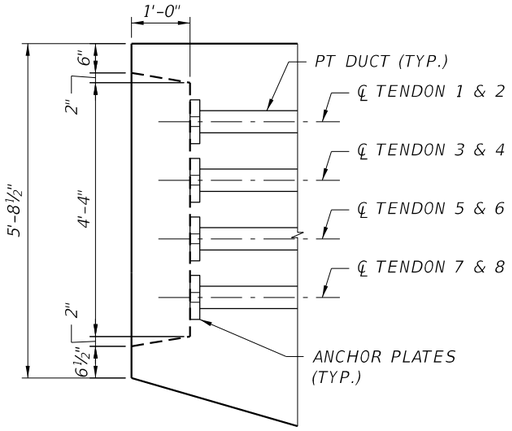

BLOCKOUT DETAILS - ELEVATION

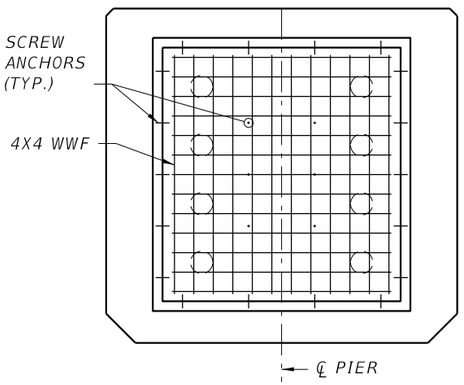

POUR BACK DETAIL

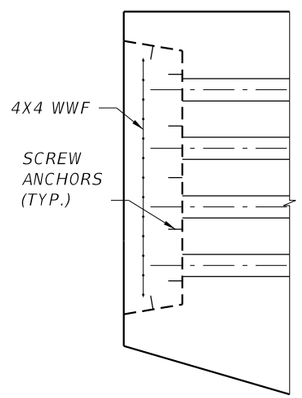

POUR BACK DETAIL

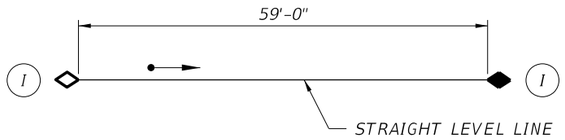

MOCKUP FOR ALL PIER 2 CAP PT BARS

BAR SIZE: 1¾" Ø BAR
ANCHORAGE SIZE: 1¾" Ø BAR ANCHORAGE
STRESSING: 3.93 KIPS
FILLER MATERIAL: GROUT

FOR CONCRETE ANCHORAGE BLOCK DETAILS FOR MOCKUP TENDON, FOLLOW BLOCKOUT DETAILS.

LEGEND:

- BAR TENDON
- ANCHORAGE WITH FILLER INLET AT LOWER END OF TENDON
- ANCHORAGE WITH FILLER OUTLET AT HIGHER END OF TENDON
- DIRECTION FILLER FLOW
- (I) INSPECTION LOCATION

NOTES:

1. AVERAGE BAR LENGTH MEASURED FROM FACE OF ANCHOR PLATE TO FACE OF ANCHOR PLATE.
2. FOR BAR LAYOUT AND PROFILE, SEE PIER CAP REINFORCING DETAILS – PIER 2 (2 OF 3) SHEET.
3. THE CONTRACTOR AND PT SUPPLIER ARE RESPONSIBLE FOR PROVIDING LOCAL ZONE REINFORCING (SPIRALS TO RESIST STRESSES IN THE AREA IMMEDIATELY SURROUNDING THE PT ANCHORS).
4. POST-TENSIONING SYSTEM SHALL CONFORM TO THE REQUIREMENTS OF SECTION 462 AND SECTION 960 OF THE STANDARD SPECIFICATIONS.
5. ANCHORAGE POUR BACK SHALL BE PLACED AFTER ALL TENDONS ARE STRESSED.
6. ALL TENDONS SHALL BE STRESSED PRIOR TO SETTING OF PHASE III SUPERSTRUCTURE BEAMS.
7. TENDONS ARE SYMMETRIC ABOUT THE VERTICAL CENTERLINE OF PIER.
8. STRESS TENDONS IN THE FOLLOWING ORDER: T3, T4, T6, T5, T1, T2, T8 AND T7.
9. PIER REINFORCEMENT IS PLACED BASED ON DUCT DIAMETER FOR PT BARS WITH COUPLERS

CONSTRUCTION SEQUENCE:

1. SET FORMWORK AND TEMPORARY SHORING IN PLACE FOR PIER CAP PHASE II CONSTRUCTION.
2. INSTALL PHASE II PIER CAP REINFORCEMENT AND PT BAR DUCTS.
3. POUR CONCRETE FOR PHASE II PIER CAP. BUILD PHASE II SUPERSTRUCTURE.
4. SET FORMWORK AND TEMPORARY SHORING IN PLACE FOR PHASE III PIER CAP CONSTRUCTION.
5. INSTALL PHASE III PIER CAP REINFORCEMENT AND PT BAR DUCTS.
6. POUR CONCRETE FOR PHASE III PIER CAP. NO BAR TENSIONING OPERATIONS ARE ALLOWED PRIOR TO CONCRETE REACHING A STRENGTH OF 4,400 PSI.
7. TENSION TENDONS. INJECT GROUT.
8. REMOVE FORMWORK AND TEMPORARY SHORING.
9. BUILD PHASE III SUPERSTRUCTURE.

POST-TENSIONING BAR TENDON DATA TABLE

Table Date 07-01-16

BAR DESIGNATION	NO. REQUIRED	BAR SIZE	BAR LENGTH (Ft-in)	STRESSING FORCE PER BAR (kips)	STRESSING END [1]	ELONGATION (in)	TENDON PROFILE [2]	FILLER MATERIAL	ANCHORAGE PROTECTION TYPE [3]	
									NORTH END	SOUTH END
T1	1	1¾" Ø	59'-0"	275.0	NORTH END	2.44	G5	GROUT	9	9
T2	1	1¾" Ø	59'-0"	275.0	NORTH END	2.44	G5	GROUT	9	9
T3	1	1¾" Ø	59'-0"	275.0	NORTH END	2.44	G5	GROUT	9	9
T4	1	1¾" Ø	59'-0"	275.0	NORTH END	2.44	G5	GROUT	9	9
T5	1	1¾" Ø	59'-0"	275.0	NORTH END	2.44	G5	GROUT	9	9
T6	1	1¾" Ø	59'-0"	275.0	NORTH END	2.44	G5	GROUT	9	9
T7	1	1¾" Ø	59'-0"	275.0	NORTH END	2.44	G5	GROUT	9	9
T8	1	1¾" Ø	59'-0"	275.0	NORTH END	2.44	G5	GROUT	9	9

NORTH END DENOTES LEFT ANCHORAGE (LOOKING AHEAD-STATION), SOUTH END DENOTES RIGHT ANCHORAGE (LOOKING AHEAD-STATION).

[1] STRESSING END DEFINITIONS:
- NORTH END: BAR LIVE/STRESSING END IS NORTH END ANCHORAGE.
- SOUTH END: BAR LIVE/STRESSING END IS SOUTH END ANCHORAGE.

[2] SEE POST-TENSIONING TENDON PROFILES, STANDARD PLANS INDEX 462-001.

[3] SEE POST-TENSIONING ANCHORAGE PROTECTION, STANDARD PLANS INDEX 462-002.

BRIDGE NO. 124143

NOTICE: THE OFFICIAL RECORD OF THIS SHEET IS THE ELECTRONIC FILE DIGITALLY SIGNED AND SEALED UNDER RULE 61G15-23.004, F.A.C.

REVISIONS

DATE	BY	DESCRIPTION	DATE	BY	DESCRIPTION

Kisinger Campo & Associates Corp.
201 N. Franklin Street
Suite 400
Tampa, FL 33602
Alfredo Jose Layrisse, PE No. 75610

DRAWN BY:	CHECKED BY:	DESIGNED BY:	CHECKED BY:
JBH 01-22	FMV 01-22	FMV 01-22	DAA 01-22

LEE COUNTY PUBLIC WORKS
DEPARTMENT OF TRANSPORTATION

ROAD NO.	COUNTY	COUNTY PROJECT No
CR 865	LEE	CN160002

SHEET TITLE: PIER CAP REINFORCING DETAILS - PIER 2 (3 OF 3)

REF. DWG. NO.:

PROJECT NAME: ESTERO BLVD. (CR 865) OVER BIG CARLOS PASS

SHEET NO.: B1-61

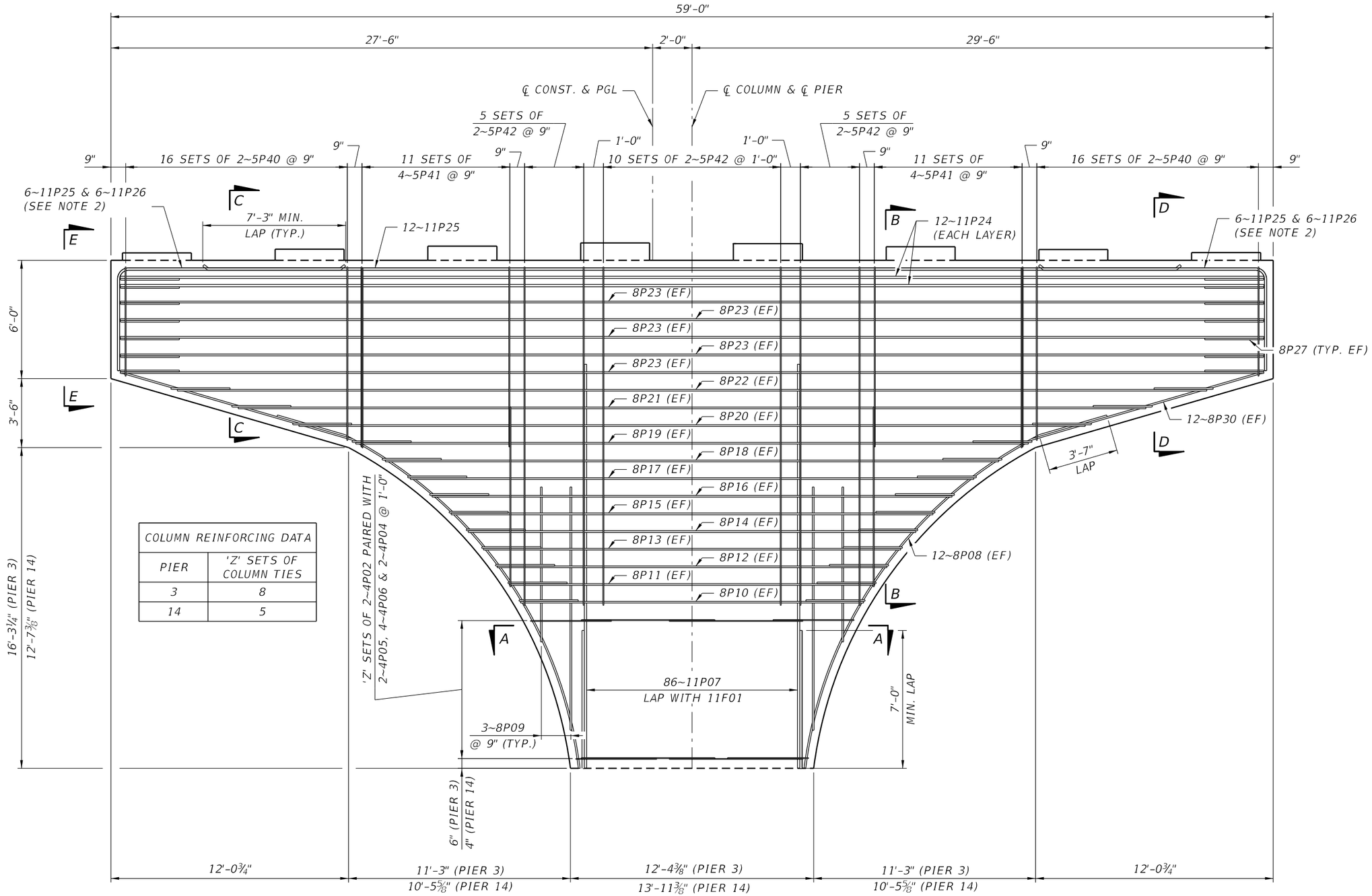

COLUMN REINFORCING DATA	
PIER	'Z' SETS OF COLUMN TIES
3	8
14	5

NOTES:

1. PEDESTAL REINFORCING NOT SHOWN FOR CLARITY.
2. ALTERNATE EVERY OTHER BAR. LAP BARS 11P25 WITH BARS 11P26.
3. SHIFT STIRRUPS AS NECESSARY TO AVOID CONFLICT WITH BARS 11P07.

PIER CAP ELEVATION

(PIER 3 SHOWN, PIER 14 SIMILAR)

CROSS REFERENCES:

1. FOR PIER AND PEDESTAL ELEVATIONS AND SPACING, SEE SHEET B1-40, B1-42, B1-43 AND B1-48.
2. FOR SECTION VIEWS AND REINFORCING DETAILS, SEE SHEET B1-64.

BRIDGE NO. 124143

REVISIONS					
DATE	BY	DESCRIPTION	DATE	BY	DESCRIPTION

Kisinger Campo & Associates Corp.
201 N. Franklin Street
Suite 400
Tampa, FL 33602
Alfredo Jose Layrisse, PE No. 75610

DRAWN BY: SKB 10-20
CHECKED BY: JHJ 04-21
DESIGNED BY: JHJ 07-20
CHECKED BY: SKB 10-20

LEE COUNTY PUBLIC WORKS DEPARTMENT OF TRANSPORTATION

ROAD NO.	COUNTY	COUNTY PROJECT No
CR 865	LEE	CN160002

SHEET TITLE: PIER CAP REINFORCING PIERS 3 & 14

REF. DWG. NO.:

PROJECT NAME: ESTERO BLVD. (CR 865) OVER BIG CARLOS PASS

SHEET NO.: B1-62

NOTICE: THE OFFICIAL RECORD OF THIS SHEET IS THE ELECTRONIC FILE DIGITALLY SIGNED AND SEALED UNDER RULE 61G15-23.004, F.A.C.

jhanna 2/24/2022 3:17:42 PM c:\pwworkingdir\kca-pw.bentley.com_kca-pw-01\josh hanna\dms00783\B1PierDet07.dgn

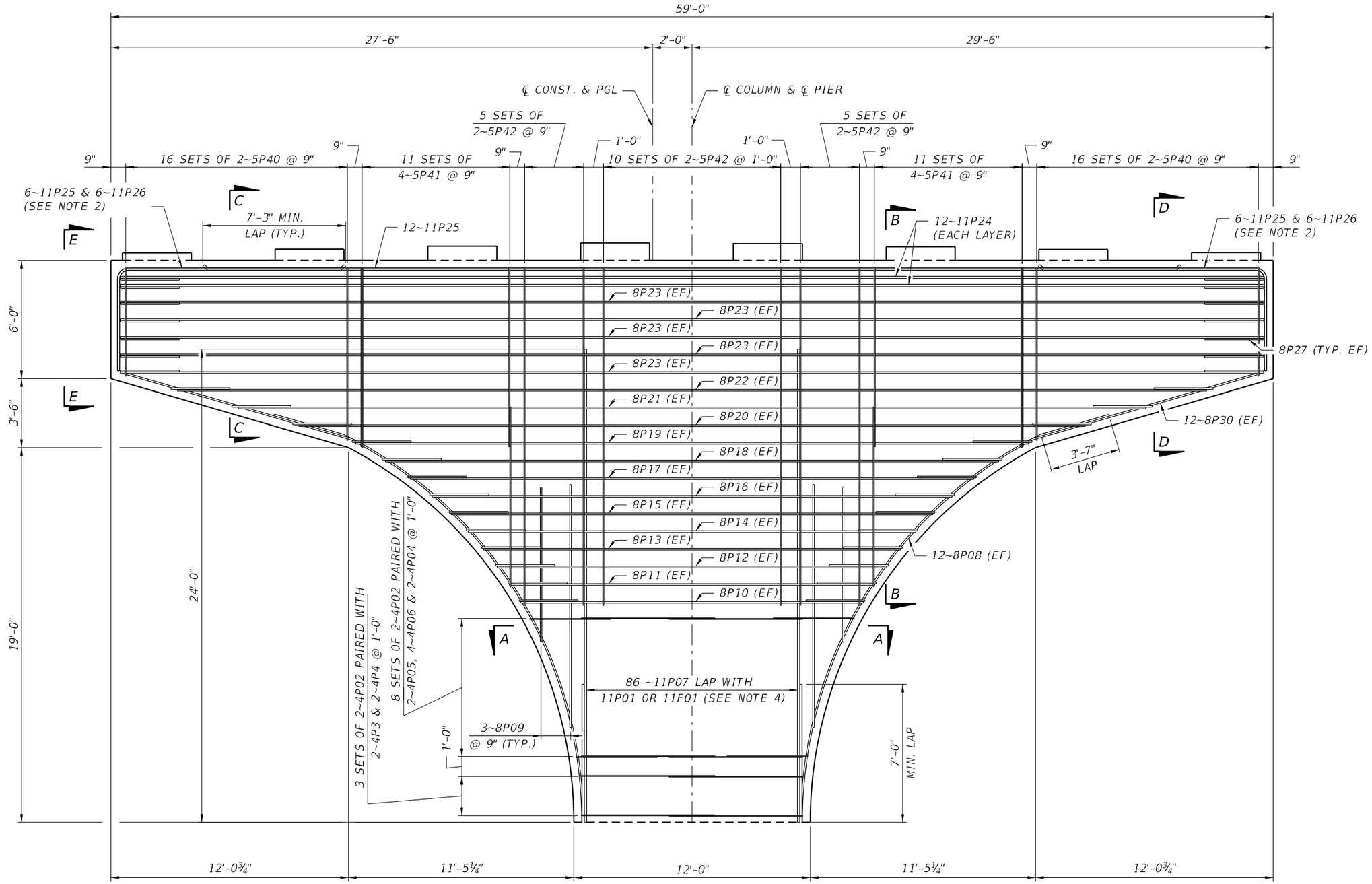

NOTES:

1. PEDESTAL REINFORCING NOT SHOWN FOR CLARITY.
2. ALTERNATE EVERY OTHER BAR. LAP BARS 11P25 WITH BARS 11P26.
3. SHIFT STIRRUPS AS NECESSARY TO AVOID CONFLICT WITH BARS 11P07.
4. MATCH 11P07 BARS TO 11F01 BARS ON PIERS 4 & 13, AND MATCH 11P07 BARS TO 11P01 BARS ON PIERS 5 THRU 12.

PIER CAP ELEVATION

CROSS REFERENCES:

1. FOR PIER AND PEDESTAL ELEVATIONS AND SPACING, SEE SHEET B1-41 AND B1-44 THRU B1-47.
2. FOR COLUMN REINFORCING, SEE SHEET B1-56 AND B1-57.
3. FOR SECTION VIEWS AND REINFORCING DETAILS, SEE SHEET B1-64.

BRIDGE NO. 124143

REVISIONS					
DATE	BY	DESCRIPTION	DATE	BY	DESCRIPTION

Kisinger Campo & Associates Corp.
201 N. Franklin Street
Suite 400
Tampa, FL 33602
Alfredo Jose Layrisse, PE No. 75610

DRAWN BY: SKB 10-20
CHECKED BY: JHJ 04-21
DESIGNED BY: JHJ 07-20
CHECKED BY: SKB 10-20

LEE COUNTY PUBLIC WORKS
DEPARTMENT OF TRANSPORTATION

ROAD NO.	COUNTY	COUNTY PROJECT No
CR 865	LEE	CN160002

SHEET TITLE: PIER CAP REINFORCING PIERS 4 THRU 13

REF. DWG. NO.:

PROJECT NAME: ESTERO BLVD. (CR 865) OVER BIG CARLOS PASS

SHEET NO.: B1-63

NOTICE: THE OFFICIAL RECORD OF THIS SHEET IS THE ELECTRONIC FILE DIGITALLY SIGNED AND SEALED UNDER RULE 61G15-23.004, F.A.C.

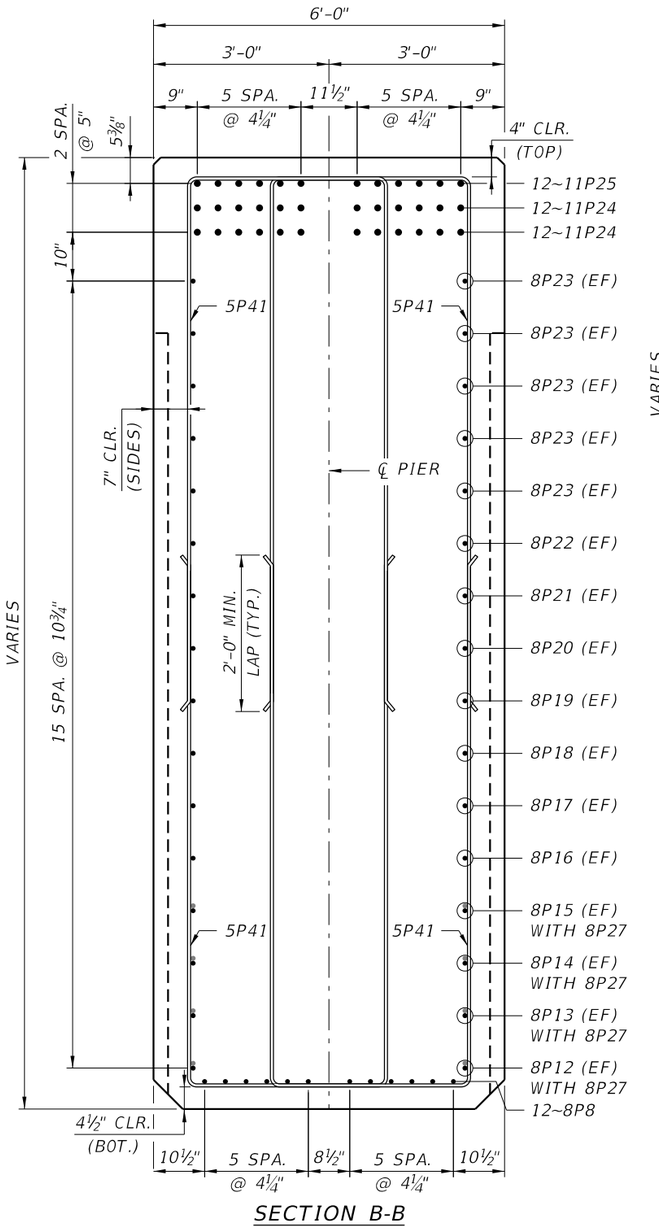

SECTION B-B

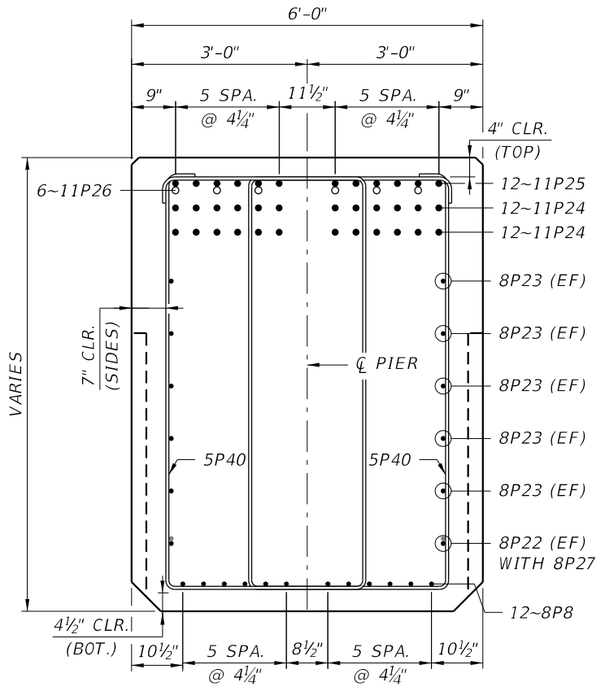

SECTION C-C

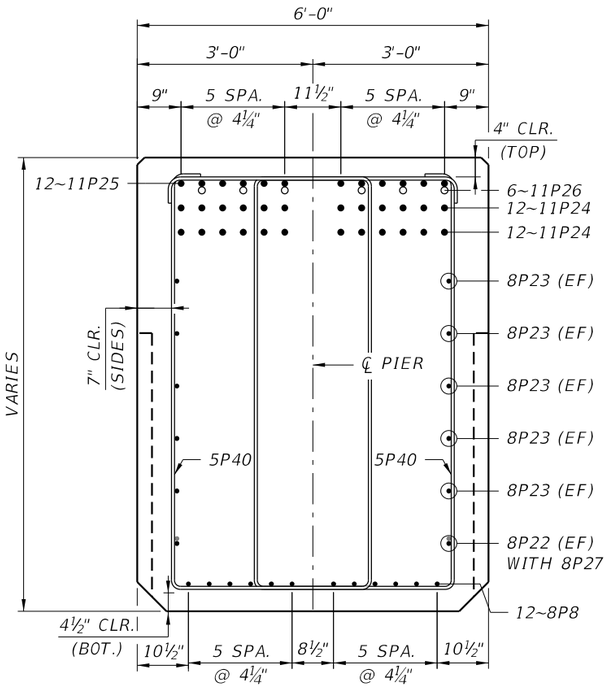

SECTION D-D

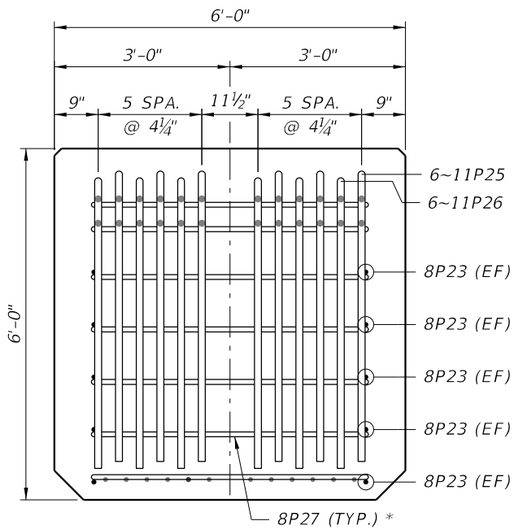

VIEW E-E

* MATCH WITH LONGITUDINAL REINFORCING

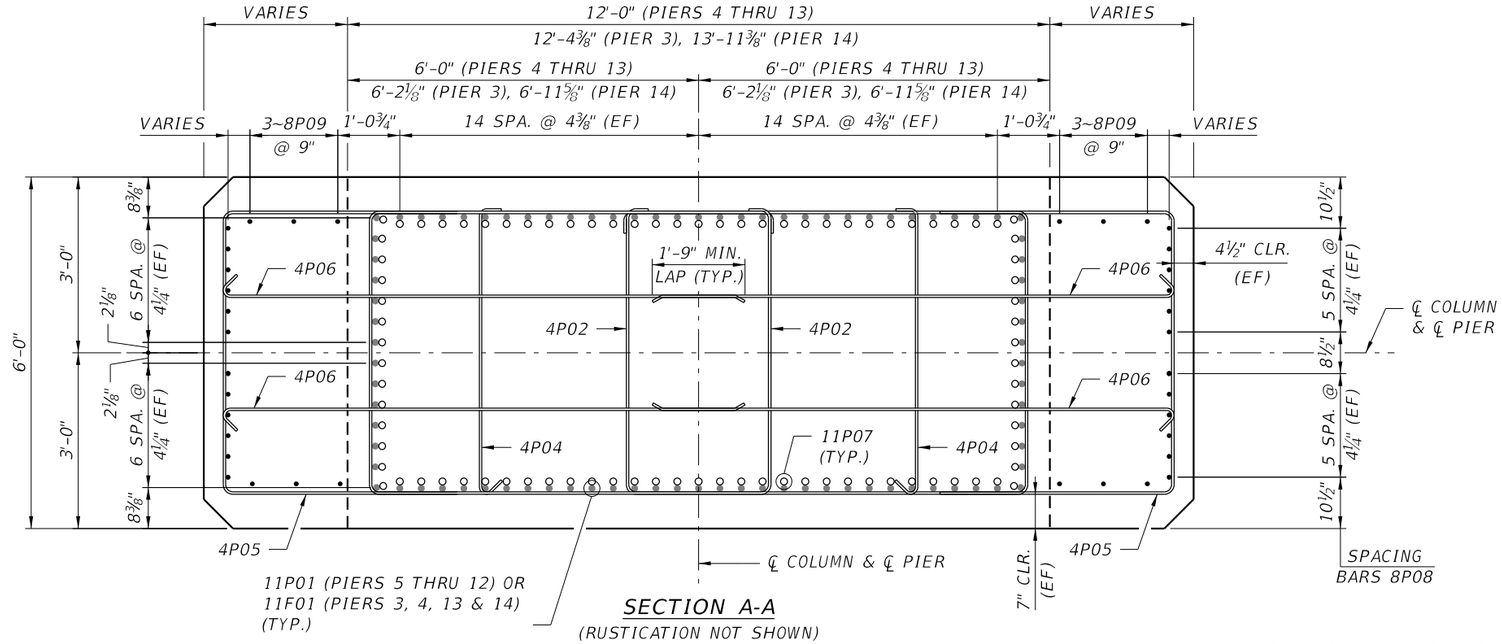

SECTION A-A

(RUSTICATION NOT SHOWN)

NOTES:

1. PEDESTALS & PEDESTAL REINFORCING NOT SHOWN FOR CLARITY.
2. CONCRETE SHALL BE MASS CONCRETE.

CROSS REFERENCES:

1. FOR LOCATIONS OF SECTION VIEWS SEE SHEETS B1-62 AND B1-63.
2. FOR PEDESTAL DETAILS, SEE SHEET B1-49.

BRIDGE NO. 124143

REVISIONS					
DATE	BY	DESCRIPTION	DATE	BY	DESCRIPTION

Kisinger Campo & Associates Corp.
201 N. Franklin Street
Suite 400
Tampa, FL 33602
Alfredo Jose Layrisse, PE No. 75610

DRAWN BY:	CHECKED BY:	DESIGNED BY:	CHECKED BY:
SKB 10-20	JHJ 04-21	JHJ 07-20	SKB 10-20

LEE COUNTY PUBLIC WORKS
DEPARTMENT OF TRANSPORTATION

ROAD NO.	COUNTY	COUNTY PROJECT No
CR 865	LEE	CN160002

SHEET TITLE: PIER CAP REINFORCING DETAILS PIERS 3 THRU 14

REF. DWG. NO.

PROJECT NAME: ESTERO BLVD. (CR 865) OVER BIG CARLOS PASS

SHEET NO. B1-64

NOTICE: THE OFFICIAL RECORD OF THIS SHEET IS THE ELECTRONIC FILE DIGITALLY SIGNED AND SEALED UNDER RULE 61G15-23.004, F.A.C.

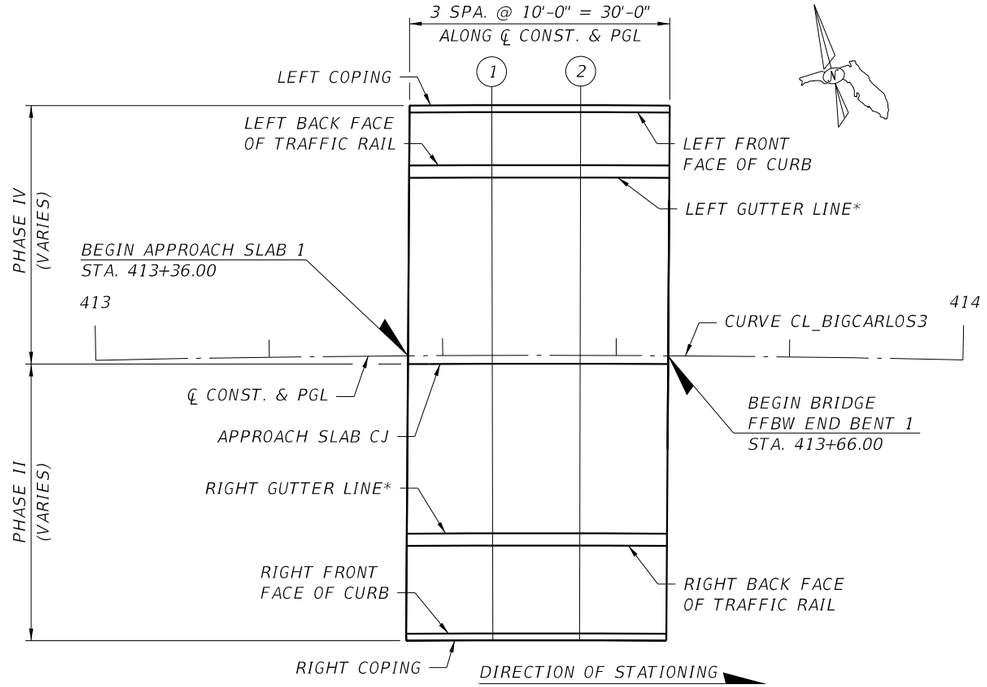

PLAN SHOWING LOCATION OF FINISH GRADE ELEVATIONS
APPROACH SLAB 1

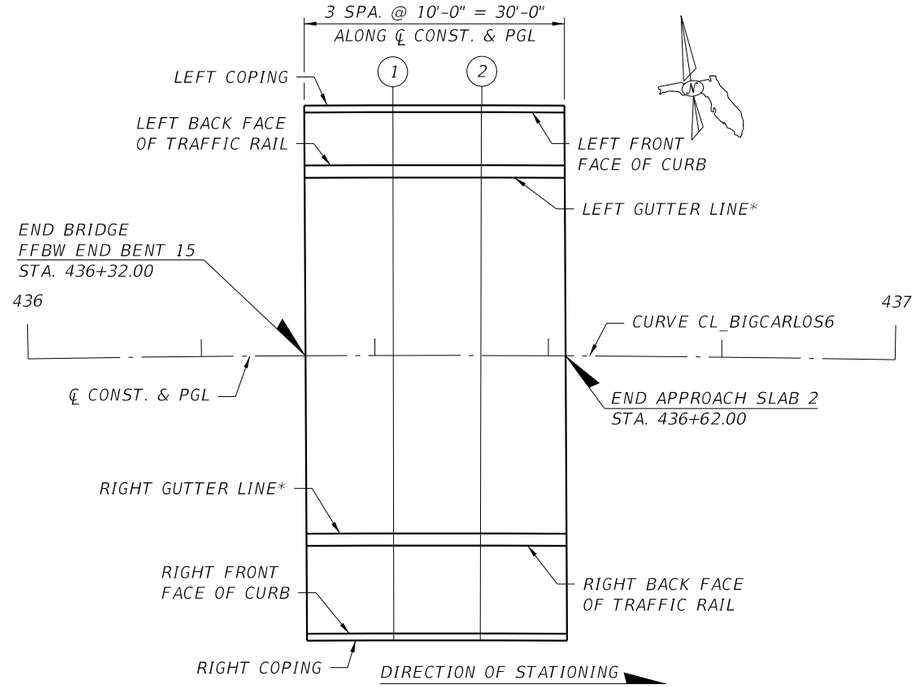

PLAN SHOWING LOCATION OF FINISH GRADE ELEVATIONS
APPROACH SLAB 2

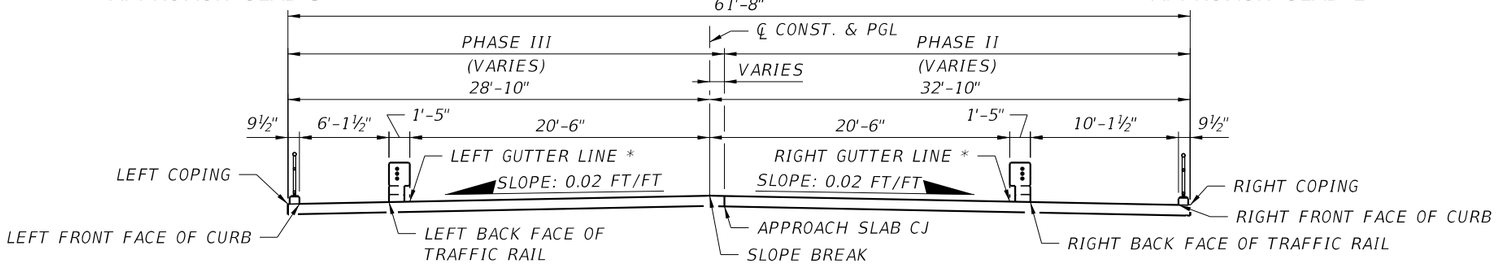

TYPICAL SECTION
APPROACH SLAB 1 & 2

FINISH GRADE ELEVATIONS

LOCATION/POINTS	BEGIN A.S. 1	APPROACH SLAB 1		BEGIN BRIDGE
		1	2	
LEFT COPING	19.478	19.972	20.466	20.960
LEFT FRONT FACE OF CURB	19.494	19.988	20.482	20.976
LEFT BACK FACE OF TRAFFIC RAIL	19.613	20.108	20.603	21.099
LEFT GUTTER LINE*	19.640	20.136	20.631	21.127
℄ CONST. & PGL	20.037	20.537	21.037	21.537
APPROACH SLAB CJ	20.017	20.517	21.018	21.518
RIGHT GUTTER LINE*	19.613	20.118	20.622	21.127
RIGHT BACK FACE OF TRAFFIC RAIL	19.584	20.089	20.594	21.099
RIGHT FRONT FACE OF CURB	19.375	19.882	20.389	20.896
RIGHT COPING	19.359	19.866	20.373	20.880

* FRONT FACE OF TRAFFIC RAIL

FINISH GRADE ELEVATIONS

LOCATION/POINTS	END BRIDGE	APPROACH SLAB 2		END A.S. 2
		1	2	
LEFT COPING	24.319	23.824	23.329	22.834
LEFT FRONT FACE OF CURB	24.335	23.840	23.345	22.850
LEFT BACK FACE OF TRAFFIC RAIL	24.458	23.961	23.465	22.969
LEFT GUTTER LINE*	24.486	23.989	23.493	22.997
℄ CONST. & PGL	24.896	24.396	23.896	23.396
RIGHT GUTTER LINE*	24.486	23.982	23.479	22.975
RIGHT BACK FACE OF TRAFFIC RAIL	24.458	23.954	23.450	22.946
RIGHT FRONT FACE OF CURB	24.255	23.749	23.244	22.738
RIGHT COPING	24.239	23.734	23.228	22.722

* FRONT FACE OF TRAFFIC RAIL

BRIDGE NO. 124143

NOTICE: THE OFFICIAL RECORD OF THIS SHEET IS THE ELECTRONIC FILE DIGITALLY SIGNED AND SEALED UNDER RULE 61G15-23.004, F.A.C.

REVISIONS

DATE	BY	DESCRIPTION	DATE	BY	DESCRIPTION

Kisinger Campo & Associates Corp.
201 N. Franklin Street
Suite 400
Tampa, FL 33602
Alfredo Jose Layrisse, PE No. 75610

DRAWN BY: SKB 10-19
CHECKED BY: AJL 10-19
DESIGNED BY: SKB 10-19
CHECKED BY: PDM 02-20

LEE COUNTY PUBLIC WORKS
DEPARTMENT OF TRANSPORTATION

ROAD NO.	COUNTY	COUNTY PROJECT No
CR 865	LEE	CN160002

SHEET TITLE: FINISH GRADE ELEVATIONS (1 OF 17)
REF. DWG. NO.
PROJECT NAME: ESTERO BLVD. (CR 865) OVER BIG CARLOS PASS
SHEET NO. B1-65

jhanna 2/24/2022 3:17:52 PM c:\pwworkingdir\kca-pw.bentley.com_kca-pw-01\josh hanna\dms00783\B1FinishGrEL01.dgn

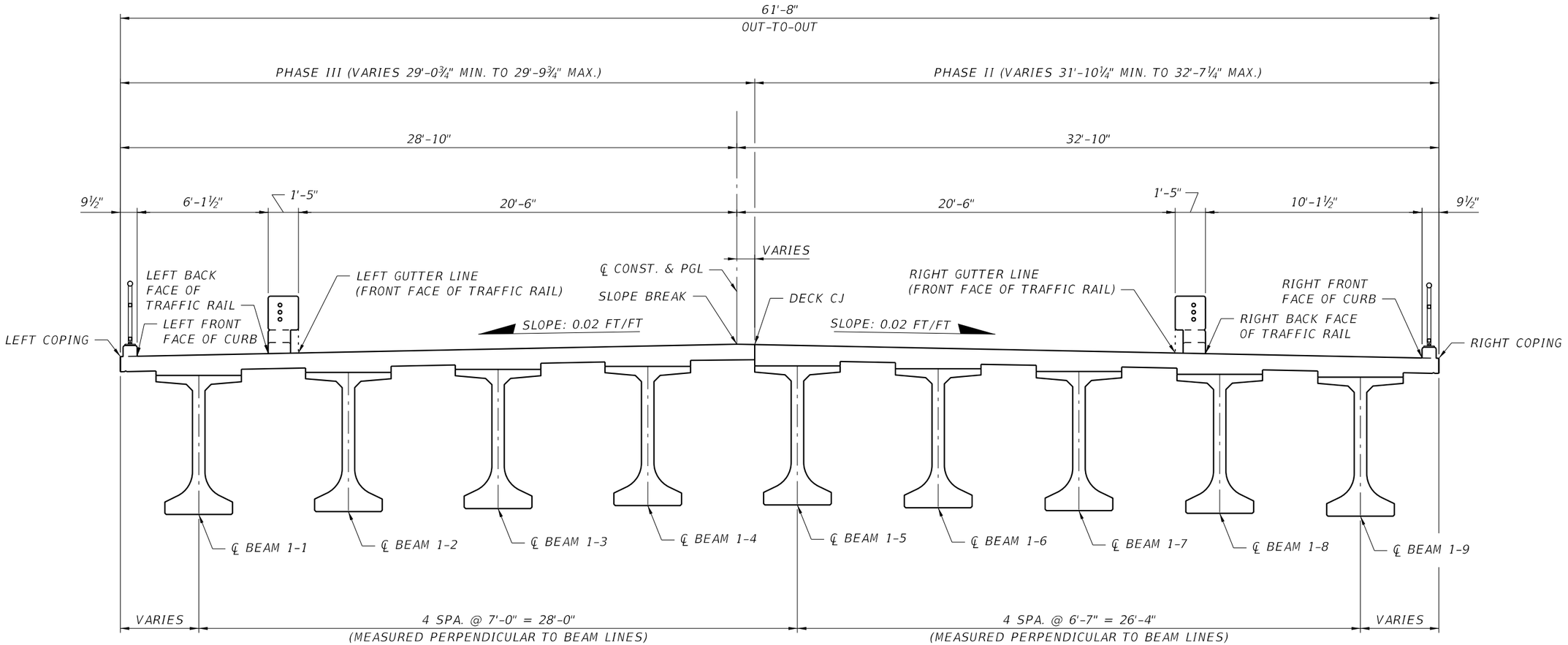

TYPICAL SECTION SHOWING LOCATION OF FINISH GRADES

SPAN 1

BRIDGE NO. 124143

NOTICE: THE OFFICIAL RECORD OF THIS SHEET IS THE ELECTRONIC FILE DIGITALLY SIGNED AND SEALED UNDER RULE 61G15-23.004, F.A.C.

REVISIONS					
DATE	BY	DESCRIPTION	DATE	BY	DESCRIPTION

Kisinger Campo & Associates Corp.
201 N. Franklin Street
Suite 400
Tampa, FL 33602
Alfredo Jose Layrisse, PE No. 75610

DRAWN BY:	SKB 10-19
CHECKED BY:	AJL 10-19
DESIGNED BY:	SKB 10-19
CHECKED BY:	PDM 02-20

LEE COUNTY PUBLIC WORKS
DEPARTMENT OF TRANSPORTATION

ROAD NO.	COUNTY	COUNTY PROJECT No
CR 865	LEE	CN160002

SHEET TITLE: FINISH GRADE ELEVATIONS (2 OF 17)

REF. DWG. NO.:

PROJECT NAME: ESTERO BLVD. (CR 865) OVER BIG CARLOS PASS

SHEET NO.: B1-66

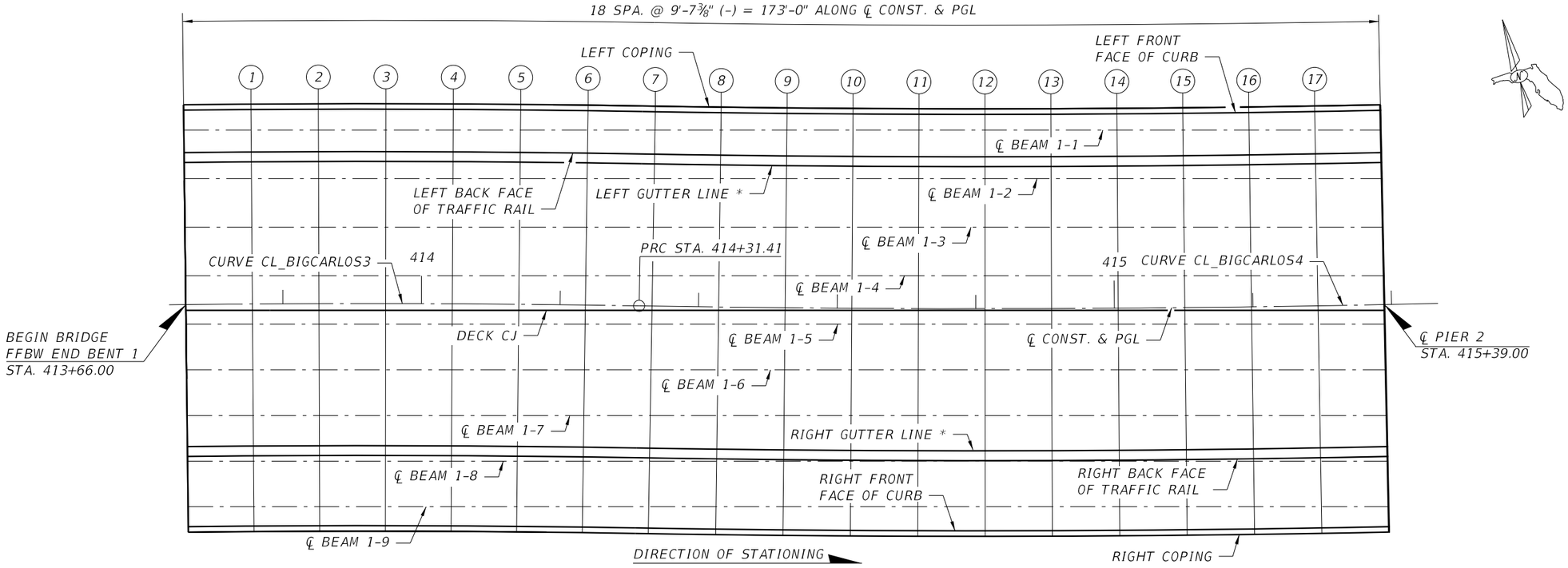

PLAN SHOWING LOCATION OF FINISH GRADE ELEVATIONS

SPAN 1

FINISH GRADE ELEVATIONS

LOCATION/POINTS	BEGIN BRIDGE	SPAN 1																	℄ PIER 2
		1	2	3	4	5	6	7	8	9	10	11	12	13	14	15	16	17	
LEFT COPING	20.960	21.441	21.921	22.402	22.882	23.363	23.844	24.324	24.805	25.285	25.766	26.246	26.727	27.207	27.688	28.169	28.649	29.130	29.610
LEFT FRONT FACE OF CURB	20.976	21.457	21.937	22.418	22.898	23.379	23.859	24.340	24.821	25.301	25.782	26.262	26.743	27.223	27.704	28.184	28.665	29.146	29.626
℄ BEAM 1-1	21.034	21.516	21.997	22.478	22.958	23.437	23.916	24.393	24.871	25.349	25.828	26.308	26.788	27.269	27.751	28.233	28.716	29.199	29.683
LEFT BACK FACE OF TRAFFIC RAIL	21.099	21.579	22.060	22.540	23.021	23.501	23.982	24.462	24.943	25.424	25.904	26.385	26.865	27.346	27.826	28.307	28.787	29.268	29.749
LEFT GUTTER LINE*	21.127	21.607	22.088	22.569	23.049	23.530	24.010	24.491	24.971	25.452	25.932	26.413	26.894	27.374	27.855	28.335	28.816	29.296	29.777
℄ BEAM 1-2	21.174	21.656	22.137	22.618	23.098	23.577	24.056	24.533	25.011	25.489	25.968	26.448	26.928	27.409	27.891	28.373	28.856	29.339	29.823
℄ BEAM 1-3	21.314	21.796	22.277	22.758	23.238	23.717	24.196	24.673	25.151	25.629	26.108	26.588	27.068	27.549	28.031	28.513	28.996	29.479	29.964
℄ BEAM 1-4	21.454	21.936	22.417	22.898	23.378	23.857	24.336	24.813	25.291	25.769	26.248	26.728	27.208	27.689	28.171	28.653	29.136	29.619	30.104
℄ CONST. & PGL	21.537	22.017	22.498	22.979	23.459	23.940	24.420	24.901	25.381	25.862	26.342	26.823	27.304	27.784	28.265	28.745	29.226	29.706	30.187
DECK CJ	21.520	21.999	22.479	22.959	23.440	23.922	24.405	24.888	25.372	25.855	26.337	26.818	27.299	27.779	28.259	28.737	29.216	29.693	30.170
℄ BEAM 1-5	21.480	21.959	22.439	22.919	23.400	23.882	24.365	24.848	25.332	25.815	26.297	26.778	27.259	27.739	28.219	28.697	29.176	29.653	30.130
℄ BEAM 1-6	21.349	21.827	22.307	22.787	23.268	23.750	24.233	24.717	25.200	25.683	26.165	26.646	27.127	27.607	28.087	28.566	29.044	29.522	29.999
℄ BEAM 1-7	21.217	21.696	22.175	22.656	23.137	23.619	24.101	24.585	25.068	25.551	26.033	26.515	26.996	27.476	27.955	28.434	28.912	29.390	29.867
RIGHT GUTTER LINE*	21.127	21.607	22.088	22.569	23.049	23.530	24.010	24.491	24.971	25.452	25.932	26.413	26.894	27.374	27.855	28.335	28.816	29.296	29.777
RIGHT BACK FACE OF TRAFFIC RAIL	21.099	21.579	22.060	22.540	23.021	23.501	23.982	24.462	24.943	25.424	25.904	26.385	26.865	27.346	27.826	28.307	28.787	29.268	29.749
℄ BEAM 1-8	21.085	21.564	22.044	22.524	23.005	23.487	23.970	24.453	24.937	25.420	25.902	26.383	26.864	27.344	27.824	28.302	28.781	29.258	29.735
℄ BEAM 1-9	20.954	21.432	21.912	22.392	22.873	23.355	23.838	24.322	24.805	25.288	25.770	26.251	26.732	27.212	27.692	28.171	28.649	29.127	29.603
RIGHT FRONT FACE OF CURB	20.896	21.377	21.857	22.338	22.818	23.299	23.779	24.260	24.741	25.221	25.702	26.182	26.663	27.143	27.624	28.104	28.585	29.066	29.546
RIGHT COPING	20.880	21.361	21.841	22.322	22.802	23.283	23.764	24.244	24.725	25.205	25.686	26.166	26.647	27.127	27.608	28.089	28.569	29.050	29.530

* FRONT FACE OF TRAFFIC RAIL

BRIDGE NO. 124143

NOTICE: THE OFFICIAL RECORD OF THIS SHEET IS THE ELECTRONIC FILE DIGITALLY SIGNED AND SEALED UNDER RULE 61G15-23.004, F.A.C.

REVISIONS					
DATE	BY	DESCRIPTION	DATE	BY	DESCRIPTION

Kisinger Campo & Associates Corp.
201 N. Franklin Street
Suite 400
Tampa, FL 33602
Alfredo Jose Layrisse, PE No. 75610

DRAWN BY: SKB 10-19
CHECKED BY: AJL 10-19
DESIGNED BY: SKB 10-19
CHECKED BY: PDM 02-20

LEE COUNTY PUBLIC WORKS
DEPARTMENT OF TRANSPORTATION

ROAD NO.	COUNTY	COUNTY PROJECT No
CR 865	LEE	CN160002

SHEET TITLE: FINISH GRADE ELEVATIONS (3 OF 17)

REF. DWG. NO.:

PROJECT NAME: ESTERO BLVD. (CR 865) OVER BIG CARLOS PASS

SHEET NO.: B1-67

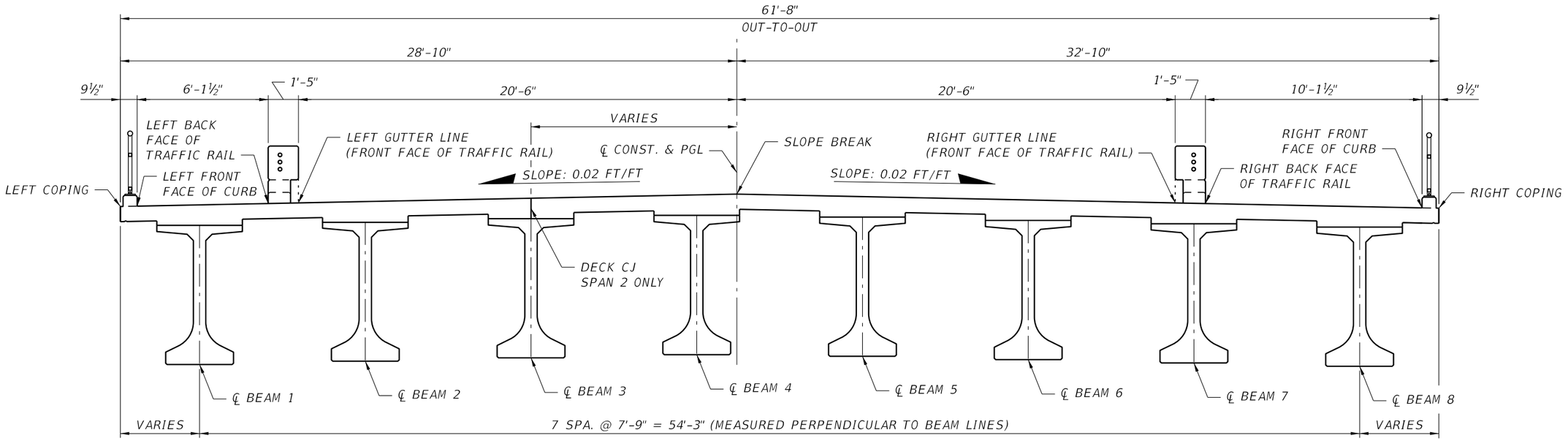

TYPICAL SECTION SHOWING LOCATION OF FINISH GRADES

SPAN 2 THRU 4 & 9 THRU 14

TYPICAL SECTION SHOWING LOCATION OF FINISH GRADES

SPAN 5 THRU 8

BRIDGE NO. 124143

NOTICE: THE OFFICIAL RECORD OF THIS SHEET IS THE ELECTRONIC FILE DIGITALLY SIGNED AND SEALED UNDER RULE 61G15-23.004, F.A.C.

REVISIONS					
DATE	BY	DESCRIPTION	DATE	BY	DESCRIPTION

Kisinger Campo & Associates Corp.
201 N. Franklin Street
Suite 400
Tampa, FL 33602
Alfredo Jose Layrisse, PE No. 75610

DRAWN BY: SKB 10-19	
CHECKED BY: AJL 10-19	
DESIGNED BY: SKB 10-19	
CHECKED BY: PDM 02-20	

LEE COUNTY PUBLIC WORKS
DEPARTMENT OF TRANSPORTATION

ROAD NO.	COUNTY	COUNTY PROJECT No
CR 865	LEE	CN160002

SHEET TITLE: *FINISH GRADE ELEVATIONS (4 OF 17)*

REF. DWG. NO.:

PROJECT NAME: *ESTERO BLVD. (CR 865) OVER BIG CARLOS PASS*

SHEET NO.: *B1-68*

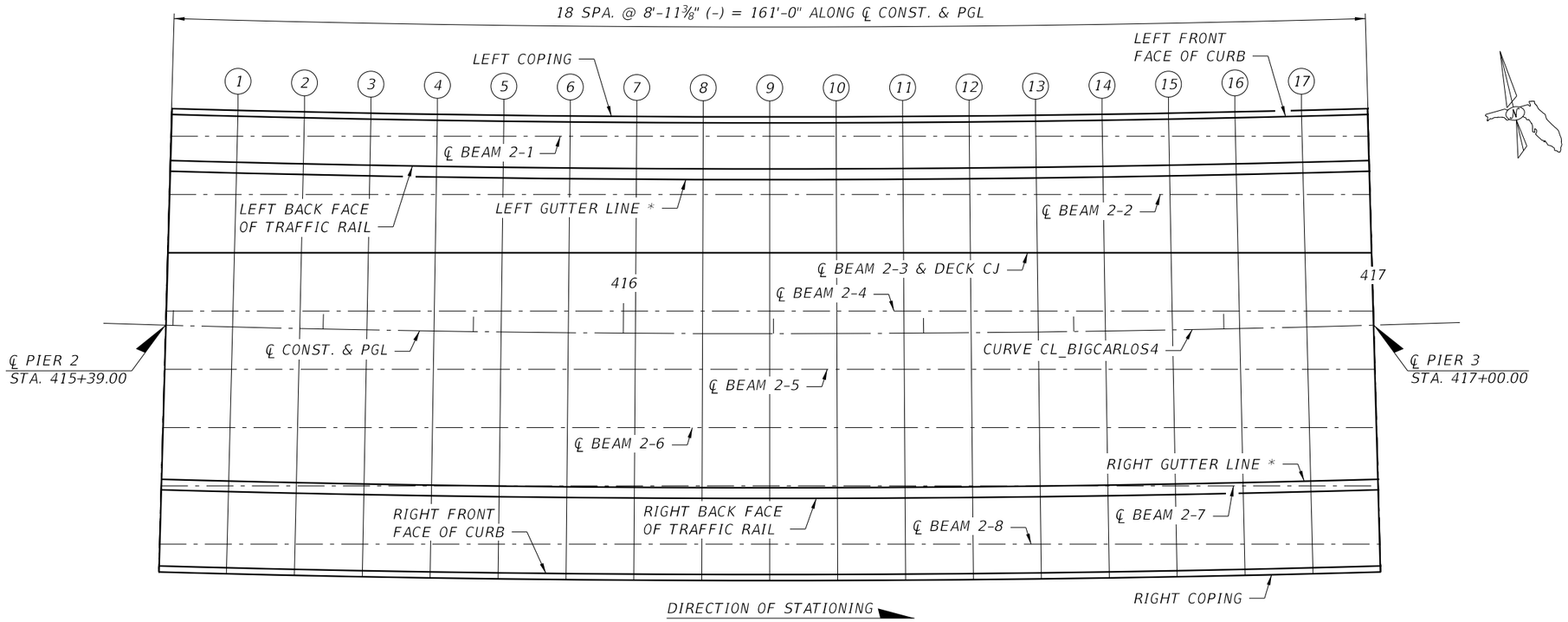

PLAN SHOWING LOCATION OF FINISH GRADE ELEVATIONS

SPAN 2

FINISH GRADE ELEVATIONS

LOCATION/POINTS	℄ PIER 2	SPAN 2																	℄ PIER 3
		1	2	3	4	5	6	7	8	9	10	11	12	13	14	15	16	17	
LEFT COPING	29.610	30.057	30.505	30.952	31.399	31.846	32.294	32.741	33.188	33.635	34.082	34.530	34.977	35.424	35.871	36.319	36.766	37.213	37.660
LEFT FRONT FACE OF CURB	29.626	30.073	30.521	30.968	31.415	31.862	32.309	32.757	33.204	33.651	34.098	34.546	34.993	35.440	35.887	36.334	36.782	37.229	37.676
℄ BEAM 2-1	29.684	30.127	30.570	31.013	31.458	31.902	32.348	32.793	33.240	33.687	34.134	34.582	35.031	35.480	35.930	36.380	36.831	37.282	37.734
LEFT BACK FACE OF TRAFFIC RAIL	29.749	30.196	30.643	31.090	31.537	31.985	32.432	32.879	33.326	33.774	34.221	34.668	35.115	35.562	36.010	36.457	36.904	37.351	37.799
LEFT GUTTER LINE *	29.777	30.224	30.671	31.119	31.566	32.013	32.460	32.907	33.355	33.802	34.249	34.696	35.144	35.591	36.038	36.485	36.932	37.380	37.827
℄ BEAM 2-2	29.839	30.282	30.725	31.168	31.613	32.057	32.503	32.948	33.395	33.842	34.289	34.737	35.186	35.635	36.085	36.535	36.986	37.437	37.889
℄ BEAM 2-3 & DECK CJ	29.994	30.437	30.880	31.323	31.768	32.212	32.658	33.103	33.550	33.997	34.444	34.892	35.341	35.790	36.240	36.690	37.141	37.592	38.044
℄ BEAM 2-4	30.149	30.592	31.035	31.478	31.923	32.367	32.813	33.258	33.705	34.152	34.599	35.047	35.496	35.945	36.395	36.845	37.296	37.747	38.199
℄ CONST. & PGL	30.187	30.634	31.081	31.529	31.976	32.423	32.870	33.317	33.765	34.212	34.659	35.106	35.554	36.001	36.448	36.895	37.342	37.790	38.237
℄ BEAM 2-5	30.069	30.521	30.973	31.424	31.874	32.324	32.773	33.221	33.670	34.117	34.564	35.010	35.456	35.901	36.346	36.790	37.234	37.677	38.119
℄ BEAM 2-6	29.914	30.366	30.818	31.269	31.719	32.169	32.618	33.066	33.515	33.962	34.409	34.855	35.301	35.746	36.191	36.635	37.079	37.522	37.964
RIGHT GUTTER LINE *	29.777	30.224	30.671	31.119	31.566	32.013	32.460	32.907	33.355	33.802	34.249	34.696	35.144	35.591	36.038	36.485	36.932	37.380	37.827
℄ BEAM 2-7	29.759	30.211	30.663	31.114	31.564	32.014	32.463	32.911	33.360	33.807	34.254	34.700	35.146	35.591	36.036	36.480	36.924	37.367	37.809
RIGHT BACK FACE OF TRAFFIC RAIL	29.749	30.196	30.643	31.090	31.537	31.985	32.432	32.879	33.326	33.774	34.221	34.668	35.115	35.562	36.010	36.457	36.904	37.351	37.799
℄ BEAM 2-8	29.604	30.056	30.508	30.959	31.409	31.859	32.308	32.756	33.205	33.652	34.099	34.545	34.991	35.436	35.881	36.325	36.769	37.212	37.654
RIGHT FRONT FACE OF CURB	29.546	29.993	30.441	30.888	31.335	31.782	32.229	32.677	33.124	33.571	34.018	34.466	34.913	35.360	35.807	36.254	36.702	37.149	37.596
RIGHT COPING	29.530	29.977	30.425	30.872	31.319	31.766	32.214	32.661	33.108	33.555	34.002	34.450	34.897	35.344	35.791	36.239	36.686	37.133	37.580

* FRONT FACE OF TRAFFIC RAIL

BRIDGE NO. 124143

NOTICE: THE OFFICIAL RECORD OF THIS SHEET IS THE ELECTRONIC FILE DIGITALLY SIGNED AND SEALED UNDER RULE 61G15-23.004, F.A.C.

REVISIONS

DATE	BY	DESCRIPTION	DATE	BY	DESCRIPTION

Kisinger Campo & Associates Corp.
201 N. Franklin Street
Suite 400
Tampa, FL 33602
Alfredo Jose Layrisse, PE No. 75610

DRAWN BY: SKB 10-19
CHECKED BY: AJL 10-19
DESIGNED BY: SKB 10-19
CHECKED BY: PDM 02-20

LEE COUNTY PUBLIC WORKS
DEPARTMENT OF TRANSPORTATION

ROAD NO.	COUNTY	COUNTY PROJECT No
CR 865	LEE	CN160002

SHEET TITLE: FINISH GRADE ELEVATIONS (5 OF 17)

REF. DWG. NO.:

PROJECT NAME: ESTERO BLVD. (CR 865) OVER BIG CARLOS PASS

SHEET NO.: B1-69

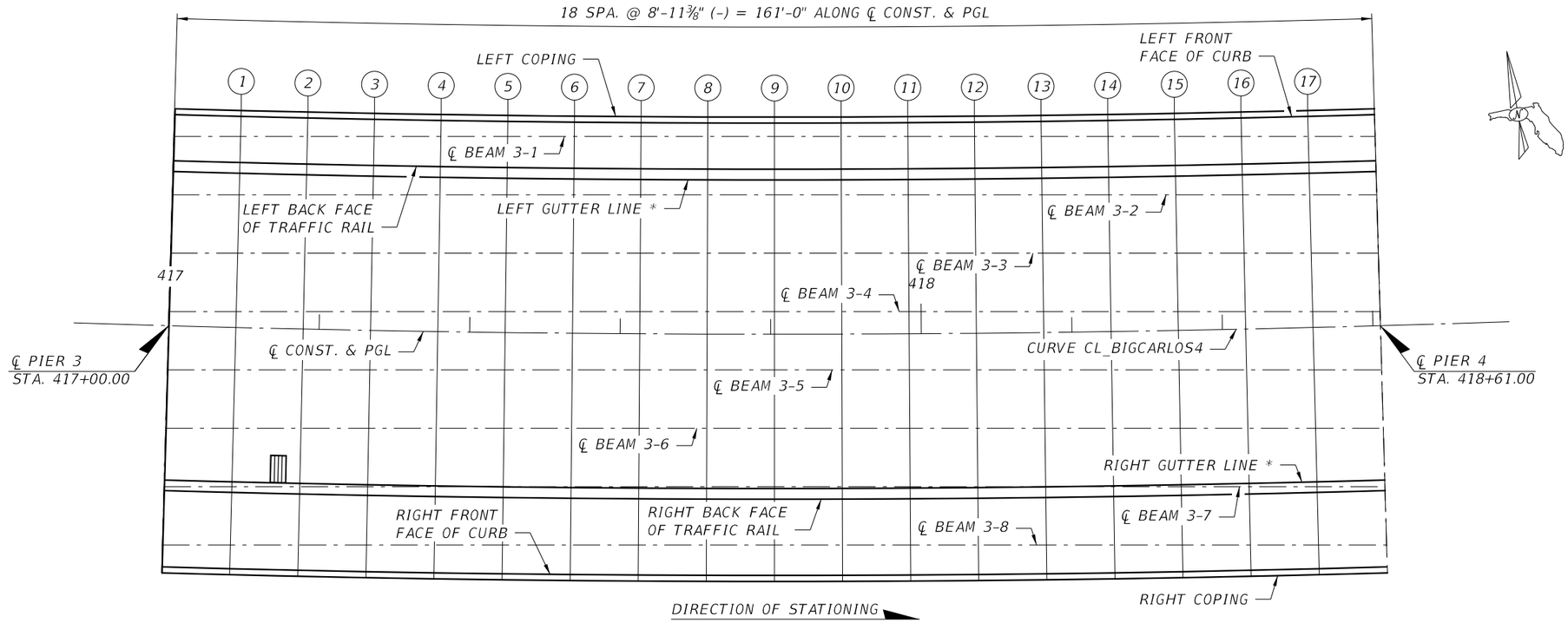

PLAN SHOWING LOCATION OF FINISH GRADE ELEVATIONS

SPAN 3

FINISH GRADE ELEVATIONS

LOCATION/POINTS	℄ PIER 3	SPAN 3																	℄ PIER 4
		1	2	3	4	5	6	7	8	9	10	11	12	13	14	15	16	17	
LEFT COPING	37.660	38.107	38.555	39.002	39.449	39.896	40.344	40.791	41.238	41.685	42.132	42.580	43.027	43.474	43.921	44.369	44.816	45.263	45.710
LEFT FRONT FACE OF CURB	37.676	38.123	38.571	39.018	39.465	39.912	40.359	40.807	41.254	41.701	42.148	42.596	43.043	43.490	43.937	44.384	44.832	45.279	45.726
℄ BEAM 3-1	37.734	38.177	38.620	39.063	39.508	39.952	40.398	40.843	41.290	41.737	42.184	42.632	43.081	43.530	43.980	44.430	44.881	45.332	45.784
LEFT BACK FACE OF TRAFFIC RAIL	37.799	38.246	38.693	39.140	39.587	40.035	40.482	40.929	41.376	41.824	42.271	42.718	43.165	43.612	44.060	44.507	44.954	45.401	45.849
LEFT GUTTER LINE *	37.827	38.274	38.721	39.169	39.616	40.063	40.510	40.957	41.405	41.852	42.299	42.746	43.194	43.641	44.088	44.535	44.982	45.430	45.877
℄ BEAM 3-2	37.889	38.332	38.775	39.218	39.663	40.107	40.553	40.998	41.445	41.892	42.339	42.787	43.236	43.685	44.135	44.585	45.036	45.487	45.939
℄ BEAM 3-3	38.044	38.487	38.930	39.373	39.818	40.262	40.708	41.153	41.600	42.047	42.494	42.942	43.391	43.840	44.290	44.740	45.191	45.642	46.094
℄ BEAM 3-4	38.199	38.642	39.085	39.528	39.973	40.417	40.863	41.308	41.755	42.202	42.649	43.097	43.546	43.995	44.445	44.895	45.346	45.797	46.249
℄ CONST. & PGL	38.237	38.684	39.131	39.579	40.026	40.473	40.920	41.367	41.815	42.262	42.709	43.156	43.604	44.051	44.498	44.945	45.392	45.840	46.287
℄ BEAM 3-5	38.119	38.571	39.023	39.474	39.924	40.374	40.823	41.271	41.720	42.167	42.614	43.060	43.506	43.951	44.396	44.840	45.284	45.727	46.169
℄ BEAM 3-6	37.964	38.416	38.868	39.319	39.769	40.219	40.668	41.116	41.565	42.012	42.459	42.905	43.351	43.796	44.241	44.685	45.129	45.572	46.014
RIGHT GUTTER LINE *	37.827	38.274	38.721	39.169	39.616	40.063	40.510	40.957	41.405	41.852	42.299	42.746	43.194	43.641	44.088	44.535	44.982	45.430	45.877
℄ BEAM 3-7	37.809	38.261	38.713	39.164	39.614	40.064	40.513	40.961	41.410	41.857	42.304	42.750	43.196	43.641	44.086	44.530	44.974	45.417	45.859
RIGHT BACK FACE OF TRAFFIC RAIL	37.799	38.246	38.693	39.140	39.587	40.035	40.482	40.929	41.376	41.824	42.271	42.718	43.165	43.612	44.060	44.507	44.954	45.401	45.849
℄ BEAM 3-8	37.654	38.106	38.558	39.009	39.459	39.909	40.358	40.806	41.255	41.702	42.149	42.595	43.041	43.486	43.931	44.375	44.819	45.262	45.704
RIGHT FRONT FACE OF CURB	37.596	38.043	38.491	38.938	39.385	39.832	40.279	40.727	41.174	41.621	42.068	42.516	42.963	43.410	43.857	44.304	44.752	45.199	45.646
RIGHT COPING	37.580	38.027	38.475	38.922	39.369	39.816	40.264	40.711	41.158	41.605	42.052	42.500	42.947	43.394	43.841	44.289	44.736	45.183	45.630

* FRONT FACE OF TRAFFIC RAIL

BRIDGE NO. 124143

NOTICE: THE OFFICIAL RECORD OF THIS SHEET IS THE ELECTRONIC FILE DIGITALLY SIGNED AND SEALED UNDER RULE 61G15-23.004, F.A.C.

REVISIONS					
DATE	BY	DESCRIPTION	DATE	BY	DESCRIPTION

Kisinger Campo & Associates Corp.
201 N. Franklin Street
Suite 400
Tampa, FL 33602
Alfredo Jose Layrisse, PE No. 75610

DRAWN BY: SKB 10-19
CHECKED BY: AJL 10-19
DESIGNED BY: SKB 10-19
CHECKED BY: PDM 02-20

LEE COUNTY PUBLIC WORKS
DEPARTMENT OF TRANSPORTATION

ROAD NO.	COUNTY	COUNTY PROJECT No
CR 865	LEE	CN160002

SHEET TITLE: FINISH GRADE ELEVATIONS (6 OF 17)

REF. DWG. NO.:

PROJECT NAME: ESTERO BLVD. (CR 865) OVER BIG CARLOS PASS

SHEET NO.: B1-70

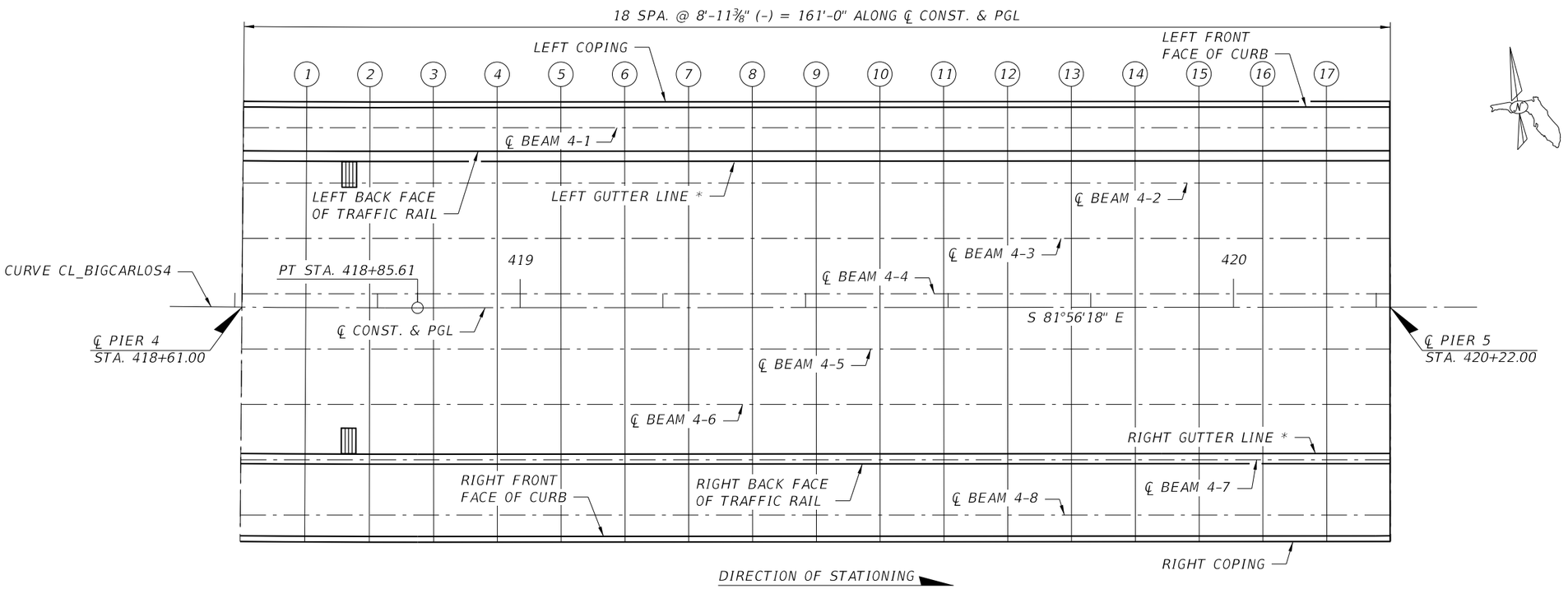

PLAN SHOWING LOCATION OF FINISH GRADE ELEVATIONS
SPAN 4

FINISH GRADE ELEVATIONS

LOCATION/POINTS	℄ PIER 4	SPAN 4																	℄ PIER 5
		1	2	3	4	5	6	7	8	9	10	11	12	13	14	15	16	17	
LEFT COPING	45.710	46.157	46.605	47.052	47.499	47.946	48.394	48.841	49.288	49.735	50.182	50.630	51.077	51.524	51.971	52.419	52.866	53.313	53.760
LEFT FRONT FACE OF CURB	45.726	46.173	46.621	47.068	47.515	47.962	48.409	48.857	49.304	49.751	50.198	50.646	51.093	51.540	51.987	52.434	52.882	53.329	53.776
℄ BEAM 4-1	45.784	46.230	46.677	47.124	47.572	48.019	48.466	48.914	49.361	49.808	50.256	50.703	51.150	51.598	52.045	52.492	52.940	53.387	53.834
LEFT BACK FACE OF TRAFFIC RAIL	45.849	46.296	46.743	47.190	47.637	48.085	48.532	48.979	49.426	49.874	50.321	50.768	51.215	51.662	52.110	52.557	53.004	53.451	53.899
LEFT GUTTER LINE *	45.877	46.324	46.771	47.219	47.666	48.113	48.560	49.007	49.455	49.902	50.349	50.796	51.244	51.691	52.138	52.585	53.032	53.480	53.927
℄ BEAM 4-2	45.939	46.385	46.832	47.279	47.727	48.174	48.621	49.069	49.516	49.963	50.411	50.858	51.305	51.753	52.200	52.647	53.095	53.542	53.989
℄ BEAM 4-3	46.094	46.540	46.987	47.434	47.882	48.329	48.776	49.224	49.671	50.118	50.566	51.013	51.460	51.908	52.355	52.802	53.250	53.697	54.144
℄ BEAM 4-4	46.249	46.695	47.142	47.589	48.037	48.484	48.931	49.379	49.826	50.273	50.721	51.168	51.615	52.063	52.510	52.957	53.405	53.852	54.299
℄ CONST. & PGL	46.287	46.734	47.181	47.629	48.076	48.523	48.970	49.417	49.865	50.312	50.759	51.206	51.654	52.101	52.548	52.995	53.442	53.890	54.337
℄ BEAM 4-5	46.169	46.618	47.066	47.513	47.960	48.407	48.854	49.301	49.748	50.195	50.643	51.090	51.537	51.984	52.431	52.878	53.325	53.772	54.219
℄ BEAM 4-6	46.014	46.463	46.911	47.358	47.805	48.252	48.699	49.146	49.593	50.040	50.488	50.935	51.382	51.829	52.276	52.723	53.170	53.617	54.064
RIGHT GUTTER LINE *	45.877	46.324	46.771	47.219	47.666	48.113	48.560	49.007	49.455	49.902	50.349	50.796	51.244	51.691	52.138	52.585	53.032	53.480	53.927
℄ BEAM 4-7	45.859	46.308	46.756	47.203	47.650	48.097	48.544	48.991	49.438	49.885	50.333	50.780	51.227	51.674	52.121	52.568	53.015	53.462	53.909
RIGHT BACK FACE OF TRAFFIC RAIL	45.849	46.296	46.743	47.190	47.637	48.085	48.532	48.979	49.426	49.874	50.321	50.768	51.215	51.662	52.110	52.557	53.004	53.451	53.899
℄ BEAM 4-8	45.704	46.153	46.601	47.048	47.495	47.942	48.389	48.836	49.283	49.730	50.178	50.625	51.072	51.519	51.966	52.413	52.860	53.307	53.754
RIGHT FRONT FACE OF CURB	45.646	46.093	46.541	46.988	47.435	47.882	48.329	48.777	49.224	49.671	50.118	50.566	51.013	51.460	51.907	52.354	52.802	53.249	53.696
RIGHT COPING	45.630	46.077	46.525	46.972	47.419	47.866	48.314	48.761	49.208	49.655	50.102	50.550	50.997	51.444	51.891	52.339	52.786	53.233	53.680

* FRONT FACE OF TRAFFIC RAIL

BRIDGE NO. 124143

NOTICE: THE OFFICIAL RECORD OF THIS SHEET IS THE ELECTRONIC FILE DIGITALLY SIGNED AND SEALED UNDER RULE 61G15-23.004, F.A.C.

REVISIONS					
DATE	BY	DESCRIPTION	DATE	BY	DESCRIPTION

Kisinger Campo & Associates Corp.
201 N. Franklin Street
Suite 400
Tampa, FL 33602
Alfredo Jose Layrisse, PE No. 75610

DRAWN BY: SKB 10-19
CHECKED BY: AJL 10-19
DESIGNED BY: SKB 10-19
CHECKED BY: PDM 02-20

LEE COUNTY PUBLIC WORKS
DEPARTMENT OF TRANSPORTATION

ROAD NO.	COUNTY	COUNTY PROJECT No
CR 865	LEE	CN160002

SHEET TITLE: FINISH GRADE ELEVATIONS (7 OF 17)

REF. DWG. NO.:

PROJECT NAME: ESTERO BLVD. (CR 865) OVER BIG CARLOS PASS

SHEET NO.: B1-71

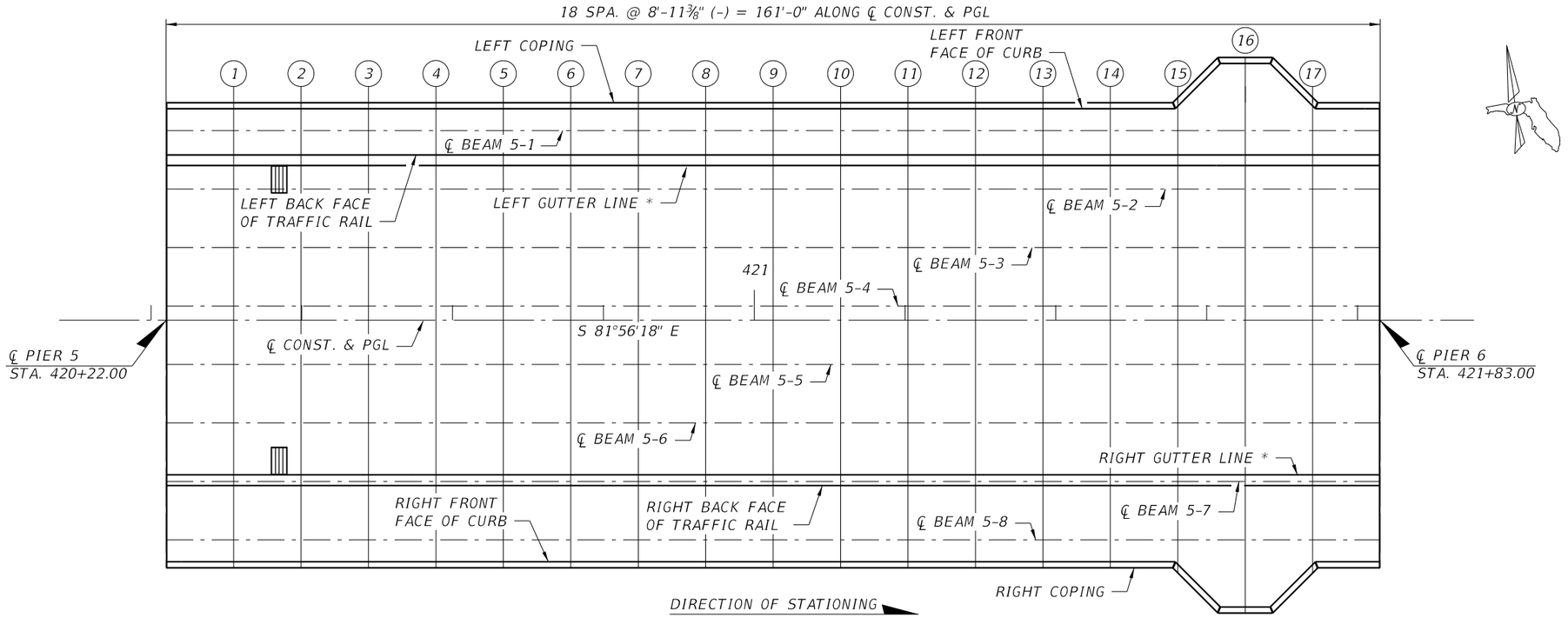

PLAN SHOWING LOCATION OF FINISH GRADE ELEVATIONS

SPAN 5

FINISH GRADE ELEVATIONS

LOCATION/POINTS	℄ PIER 5	SPAN 5																	℄ PIER 6
		1	2	3	4	5	6	7	8	9	10	11	12	13	14	15	16	17	
LEFT COPING	53.760	54.207	54.655	55.102	55.549	55.996	56.444	56.891	57.338	57.785	58.232	58.680	59.127	59.574	60.021	60.456	60.796	61.349	61.810
LEFT FRONT FACE OF CURB	53.776	54.223	54.671	55.118	55.565	56.012	56.459	56.907	57.354	57.801	58.248	58.696	59.143	59.590	60.037	60.477	60.812	61.372	61.826
℄ BEAM 5-1	53.834	54.282	54.729	55.176	55.623	56.071	56.518	56.965	57.412	57.859	58.307	58.754	59.201	59.648	60.096	60.543	60.990	61.437	61.884
LEFT BACK FACE OF TRAFFIC RAIL	53.899	54.346	54.793	55.240	55.687	56.135	56.582	57.029	57.476	57.924	58.371	58.818	59.265	59.712	60.160	60.607	61.054	61.501	61.949
LEFT GUTTER LINE*	53.927	54.374	54.821	55.269	55.716	56.163	56.610	57.057	57.505	57.952	58.399	58.846	59.294	59.741	60.188	60.635	61.082	61.530	61.977
℄ BEAM 5-2	53.989	54.437	54.884	55.331	55.778	56.226	56.673	57.120	57.567	58.014	58.462	58.909	59.356	59.803	60.251	60.698	61.145	61.592	62.039
℄ BEAM 5-3	54.144	54.592	55.039	55.486	55.933	56.381	56.828	57.275	57.722	58.169	58.617	59.064	59.511	59.958	60.406	60.853	61.300	61.747	62.194
℄ BEAM 5-4	54.299	54.747	55.194	55.641	56.088	56.536	56.983	57.430	57.877	58.324	58.772	59.219	59.666	60.113	60.561	61.008	61.455	61.902	62.349
℄ CONST. & PGL	54.337	54.784	55.231	55.679	56.126	56.573	57.020	57.467	57.915	58.362	58.809	59.256	59.704	60.151	60.598	61.045	61.492	61.940	62.387
℄ BEAM 5-5	54.219	54.667	55.114	55.561	56.008	56.456	56.903	57.350	57.797	58.244	58.692	59.139	59.586	60.033	60.481	60.928	61.375	61.822	62.269
℄ BEAM 5-6	54.064	54.512	54.959	55.406	55.853	56.301	56.748	57.195	57.642	58.089	58.537	58.984	59.431	59.878	60.326	60.773	61.220	61.667	62.114
RIGHT GUTTER LINE*	53.927	54.374	54.821	55.269	55.716	56.163	56.610	57.057	57.505	57.952	58.399	58.846	59.294	59.741	60.188	60.635	61.082	61.530	61.977
℄ BEAM 5-7	53.909	54.357	54.804	55.251	55.698	56.146	56.593	57.040	57.487	57.934	58.382	58.829	59.276	59.723	60.171	60.618	61.065	61.512	61.959
RIGHT BACK FACE OF TRAFFIC RAIL	53.899	54.346	54.793	55.240	55.687	56.135	56.582	57.029	57.476	57.924	58.371	58.818	59.265	59.712	60.160	60.607	61.054	61.501	61.949
℄ BEAM 5-8	53.754	54.202	54.649	55.096	55.543	55.991	56.438	56.885	57.332	57.779	58.227	58.674	59.121	59.568	60.016	60.463	60.910	61.357	61.804
RIGHT FRONT FACE OF CURB	53.696	54.143	54.591	55.038	55.485	55.932	56.379	56.827	57.274	57.721	58.168	58.616	59.063	59.510	59.957	60.397	60.732	61.292	61.746
RIGHT COPING	53.680	54.127	54.575	55.022	55.469	55.916	56.364	56.811	57.258	57.705	58.152	58.600	59.047	59.494	59.941	60.376	60.716	61.269	61.730

* FRONT FACE OF TRAFFIC RAIL

BRIDGE NO. 124143

NOTICE: THE OFFICIAL RECORD OF THIS SHEET IS THE ELECTRONIC FILE DIGITALLY SIGNED AND SEALED UNDER RULE 61G15-23.004, F.A.C.

REVISIONS					
DATE	BY	DESCRIPTION	DATE	BY	DESCRIPTION

Kisinger Campo & Associates Corp.
201 N. Franklin Street
Suite 400
Tampa, FL 33602
Alfredo Jose Layrisse, PE No. 75610

DRAWN BY: SKB 10-19
CHECKED BY: AJL 10-19
DESIGNED BY: SKB 10-19
CHECKED BY: PDM 02-20

LEE COUNTY PUBLIC WORKS
DEPARTMENT OF TRANSPORTATION

ROAD NO.	COUNTY	COUNTY PROJECT No
CR 865	LEE	CN160002

SHEET TITLE: FINISH GRADE ELEVATIONS (8 OF 17)

REF. DWG. NO.

PROJECT NAME: ESTERO BLVD. (CR 865) OVER BIG CARLOS PASS

SHEET NO. B1-72

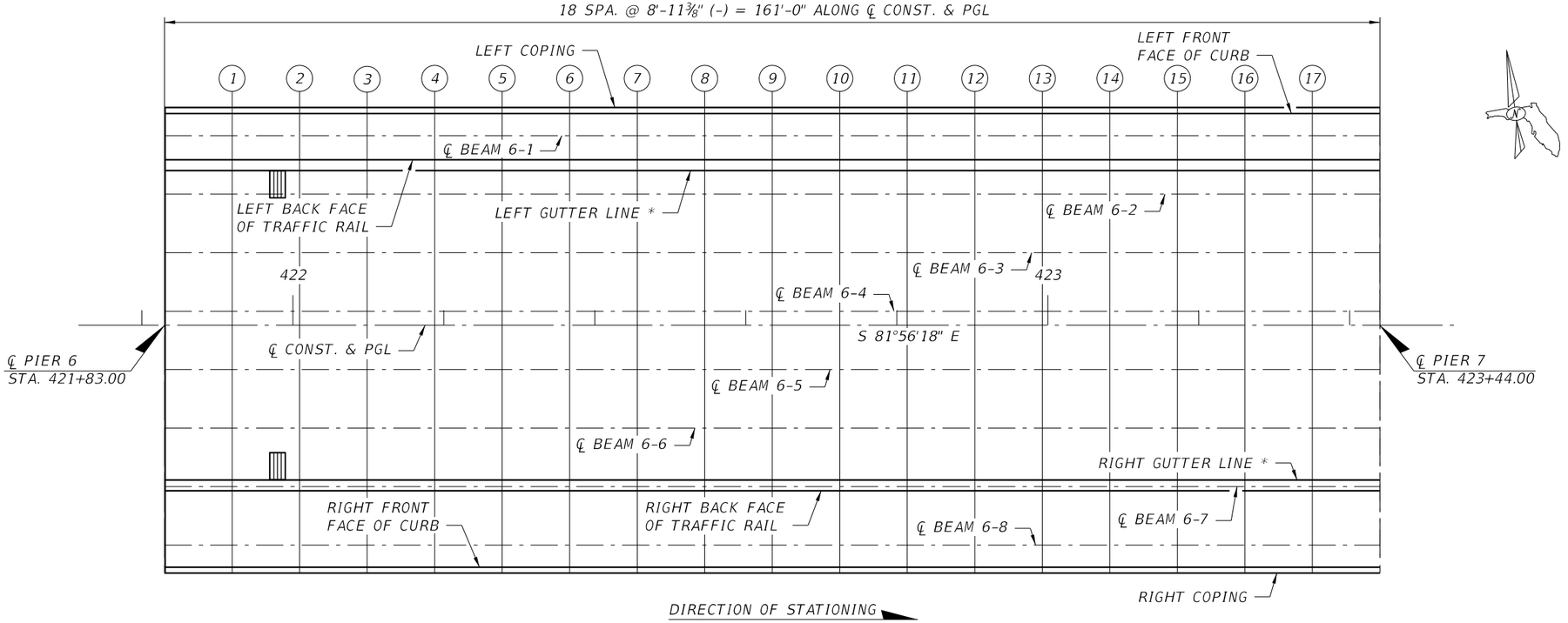

PLAN SHOWING LOCATION OF FINISH GRADE ELEVATIONS
SPAN 6

FINISH GRADE ELEVATIONS

LOCATION/POINTS	℄ PIER 6	SPAN 6																	℄ PIER 7
		1	2	3	4	5	6	7	8	9	10	11	12	13	14	15	16	17	
LEFT COPING	61.810	62.251	62.681	63.099	63.506	63.901	64.285	64.657	65.018	65.368	65.706	66.032	66.348	66.652	66.944	67.225	67.494	67.753	67.999
LEFT FRONT FACE OF CURB	61.826	62.267	62.697	63.115	63.521	63.917	64.301	64.673	65.034	65.383	65.722	66.048	66.364	66.667	66.960	67.241	67.510	67.768	68.015
℄ BEAM 6-1	61.884	62.325	62.755	63.173	63.580	63.975	64.359	64.731	65.092	65.442	65.780	66.107	66.422	66.726	67.018	67.299	67.569	67.827	68.073
LEFT BACK FACE OF TRAFFIC RAIL	61.949	62.390	62.819	63.237	63.644	64.039	64.423	64.795	65.156	65.506	65.844	66.171	66.486	66.790	67.082	67.363	67.633	67.891	68.138
LEFT GUTTER LINE *	61.977	62.418	62.847	63.266	63.672	64.068	64.451	64.824	65.185	65.534	65.872	66.199	66.514	66.818	67.111	67.392	67.661	67.919	68.166
℄ BEAM 6-2	62.039	62.480	62.910	63.328	63.735	64.130	64.514	64.886	65.247	65.597	65.935	66.262	66.577	66.881	67.173	67.454	67.724	67.982	68.228
℄ BEAM 6-3	62.194	62.635	63.065	63.483	63.890	64.285	64.669	65.041	65.402	65.752	66.090	66.417	66.732	67.036	67.328	67.609	67.879	68.137	68.383
℄ BEAM 6-4	62.349	62.790	63.220	63.638	64.045	64.440	64.824	65.196	65.557	65.907	66.245	66.572	66.887	67.191	67.483	67.764	68.034	68.292	68.538
℄ CONST. & PGL	62.387	62.828	63.257	63.676	64.082	64.478	64.861	65.234	65.595	65.944	66.282	66.609	66.924	67.228	67.521	67.802	68.071	68.329	68.576
℄ BEAM 6-5	62.269	62.710	63.140	63.558	63.965	64.360	64.744	65.116	65.477	65.827	66.165	66.492	66.807	67.111	67.403	67.684	67.954	68.212	68.458
℄ BEAM 6-6	62.114	62.555	62.985	63.403	63.810	64.205	64.589	64.961	65.322	65.672	66.010	66.337	66.652	66.956	67.248	67.529	67.799	68.057	68.303
RIGHT GUTTER LINE*	61.977	62.418	62.847	63.266	63.672	64.068	64.451	64.824	65.185	65.534	65.872	66.199	66.514	66.818	67.111	67.392	67.661	67.919	68.166
℄ BEAM 6-7	61.959	62.400	62.830	63.248	63.655	64.050	64.434	64.806	65.167	65.517	65.855	66.182	66.497	66.801	67.093	67.374	67.644	67.902	68.148
RIGHT BACK FACE OF TRAFFIC RAIL	61.949	62.390	62.819	63.237	63.644	64.039	64.423	64.795	65.156	65.506	65.844	66.171	66.486	66.790	67.082	67.363	67.633	67.891	68.138
℄ BEAM 6-8	61.804	62.245	62.675	63.093	63.500	63.895	64.279	64.651	65.012	65.362	65.700	66.027	66.342	66.646	66.938	67.219	67.489	67.747	67.993
RIGHT FRONT FACE OF CURB	61.746	62.187	62.617	63.035	63.441	63.837	64.221	64.593	64.954	65.303	65.642	65.968	66.284	66.587	66.880	67.161	67.430	67.688	67.935
RIGHT COPING	61.730	62.171	62.601	63.019	63.426	63.821	64.205	64.577	64.938	65.288	65.626	65.952	66.268	66.572	66.864	67.145	67.414	67.673	67.919

* FRONT FACE OF TRAFFIC RAIL

BRIDGE NO. 124143

REVISIONS					
DATE	BY	DESCRIPTION	DATE	BY	DESCRIPTION

Kisinger Campo & Associates Corp.
201 N. Franklin Street
Suite 400
Tampa, FL 33602
Alfredo Jose Layrisse, PE No. 75610

DRAWN BY:	CHECKED BY:	DESIGNED BY:	CHECKED BY:
SKB 10-19	AJL 10-19	SKB 10-19	PDM 02-20

LEE COUNTY PUBLIC WORKS
DEPARTMENT OF TRANSPORTATION

ROAD NO.	COUNTY	COUNTY PROJECT No
CR 865	LEE	CN160002

SHEET TITLE: FINISH GRADE ELEVATIONS (9 OF 17)

REF. DWG. NO.:

PROJECT NAME: ESTERO BLVD. (CR 865) OVER BIG CARLOS PASS

SHEET NO.: B1-73

NOTICE: THE OFFICIAL RECORD OF THIS SHEET IS THE ELECTRONIC FILE DIGITALLY SIGNED AND SEALED UNDER RULE 61G15-23.004, F.A.C.

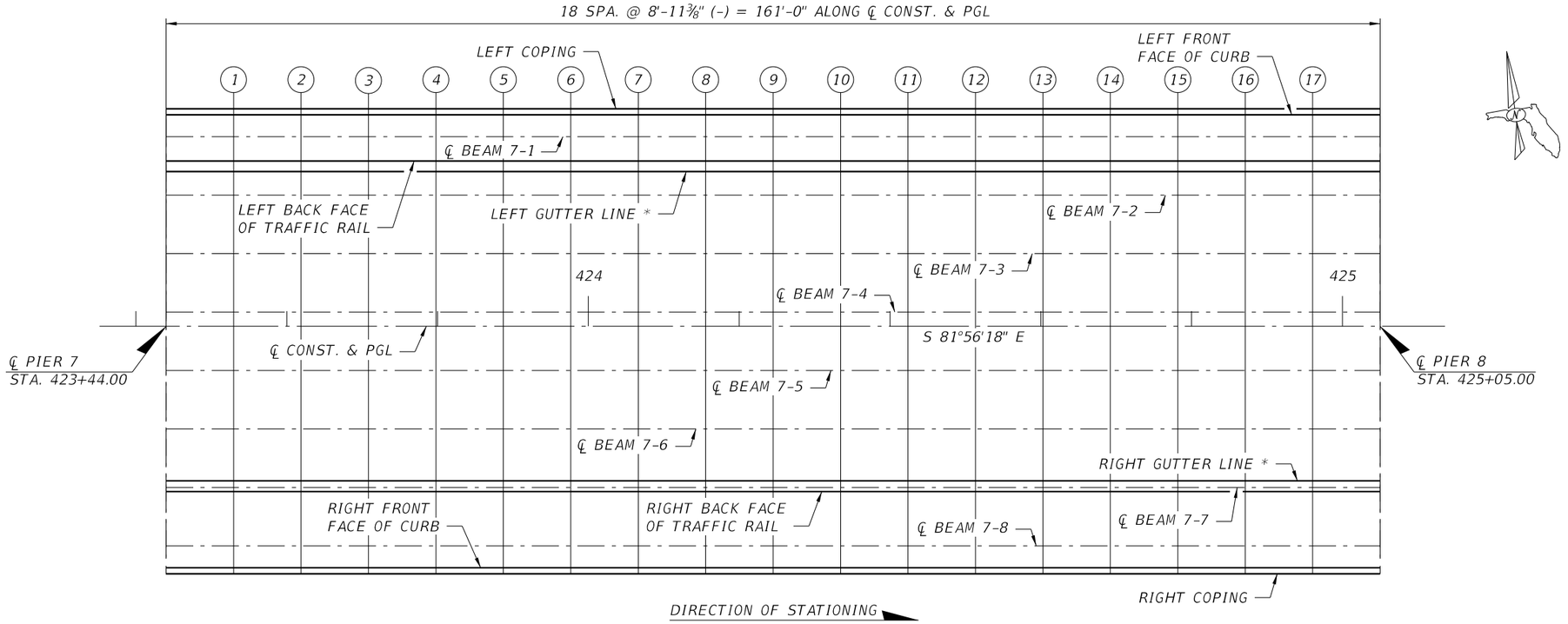

PLAN SHOWING LOCATION OF FINISH GRADE ELEVATIONS
SPAN 7

FINISH GRADE ELEVATIONS

LOCATION/POINTS	℄ PIER 7	SPAN 7																	℄ PIER 8
		1	2	3	4	5	6	7	8	9	10	11	12	13	14	15	16	17	
LEFT COPING	67.999	68.235	68.458	68.671	68.872	69.061	69.239	69.406	69.561	69.705	69.838	69.959	70.068	70.166	70.253	70.328	70.392	70.444	70.485
LEFT FRONT FACE OF CURB	68.015	68.250	68.474	68.687	68.888	69.077	69.255	69.422	69.577	69.721	69.853	69.974	70.084	70.182	70.269	70.344	70.408	70.460	70.501
℄ BEAM 7-1	68.073	68.309	68.533	68.745	68.946	69.135	69.314	69.480	69.636	69.779	69.912	70.033	70.142	70.240	70.327	70.402	70.466	70.519	70.560
LEFT BACK FACE OF TRAFFIC RAIL	68.138	68.373	68.597	68.809	69.010	69.200	69.378	69.544	69.700	69.844	69.976	70.097	70.206	70.305	70.391	70.467	70.530	70.583	70.624
LEFT GUTTER LINE *	68.166	68.401	68.625	68.837	69.038	69.228	69.406	69.573	69.728	69.872	70.004	70.125	70.235	70.333	70.420	70.495	70.559	70.611	70.652
℄ BEAM 7-2	68.228	68.464	68.688	68.900	69.101	69.290	69.469	69.635	69.791	69.934	70.067	70.188	70.297	70.395	70.482	70.557	70.621	70.674	70.715
℄ BEAM 7-3	68.383	68.619	68.843	69.055	69.256	69.445	69.624	69.790	69.946	70.089	70.222	70.343	70.452	70.550	70.637	70.712	70.776	70.829	70.870
℄ BEAM 7-4	68.538	68.774	68.998	69.210	69.411	69.600	69.779	69.945	70.101	70.244	70.377	70.498	70.607	70.705	70.792	70.867	70.931	70.984	71.025
℄ CONST. & PGL	68.576	68.811	69.035	69.247	69.448	69.638	69.816	69.983	70.138	70.282	70.414	70.535	70.645	70.743	70.830	70.905	70.969	71.021	71.062
℄ BEAM 7-5	68.458	68.694	68.918	69.130	69.331	69.520	69.699	69.865	70.021	70.164	70.297	70.418	70.527	70.625	70.712	70.787	70.851	70.904	70.945
℄ BEAM 7-6	68.303	68.539	68.763	68.975	69.176	69.365	69.544	69.710	69.866	70.009	70.142	70.263	70.372	70.470	70.557	70.632	70.696	70.749	70.790
RIGHT GUTTER LINE *	68.166	68.401	68.625	68.837	69.038	69.228	69.406	69.573	69.728	69.872	70.004	70.125	70.235	70.333	70.420	70.495	70.559	70.611	70.652
℄ BEAM 7-7	68.148	68.384	68.608	68.820	69.021	69.210	69.389	69.555	69.711	69.854	69.987	70.108	70.217	70.315	70.402	70.477	70.541	70.594	70.635
RIGHT BACK FACE OF TRAFFIC RAIL	68.138	68.373	68.597	68.809	69.010	69.200	69.378	69.544	69.700	69.844	69.976	70.097	70.206	70.305	70.391	70.467	70.530	70.583	70.624
℄ BEAM 7-8	67.993	68.229	68.453	68.665	68.866	69.055	69.234	69.400	69.556	69.699	69.832	69.953	70.062	70.160	70.247	70.322	70.386	70.439	70.480
RIGHT FRONT FACE OF CURB	67.935	68.170	68.394	68.607	68.808	68.997	69.175	69.342	69.497	69.641	69.773	69.894	70.004	70.102	70.189	70.264	70.328	70.380	70.421
RIGHT COPING	67.919	68.155	68.378	68.591	68.792	68.981	69.159	69.326	69.481	69.625	69.758	69.879	69.988	70.086	70.173	70.248	70.312	70.364	70.405

* FRONT FACE OF TRAFFIC RAIL

BRIDGE NO. 124143

NOTICE: THE OFFICIAL RECORD OF THIS SHEET IS THE ELECTRONIC FILE DIGITALLY SIGNED AND SEALED UNDER RULE 61G15-23.004, F.A.C.

REVISIONS

DATE	BY	DESCRIPTION	DATE	BY	DESCRIPTION

Kisinger Campo & Associates Corp.
201 N. Franklin Street
Suite 400
Tampa, FL 33602
Alfredo Jose Layrisse, PE No. 75610

DRAWN BY: SKB 10-19
CHECKED BY: AJL 10-19
DESIGNED BY: SKB 10-19
CHECKED BY: PDM 02-20

LEE COUNTY PUBLIC WORKS
DEPARTMENT OF TRANSPORTATION

ROAD NO.	COUNTY	COUNTY PROJECT No
CR 865	LEE	CN160002

SHEET TITLE: FINISH GRADE ELEVATIONS (10 OF 17)

REF. DWG. NO.

PROJECT NAME: ESTERO BLVD. (CR 865) OVER BIG CARLOS PASS

SHEET NO. B1-74

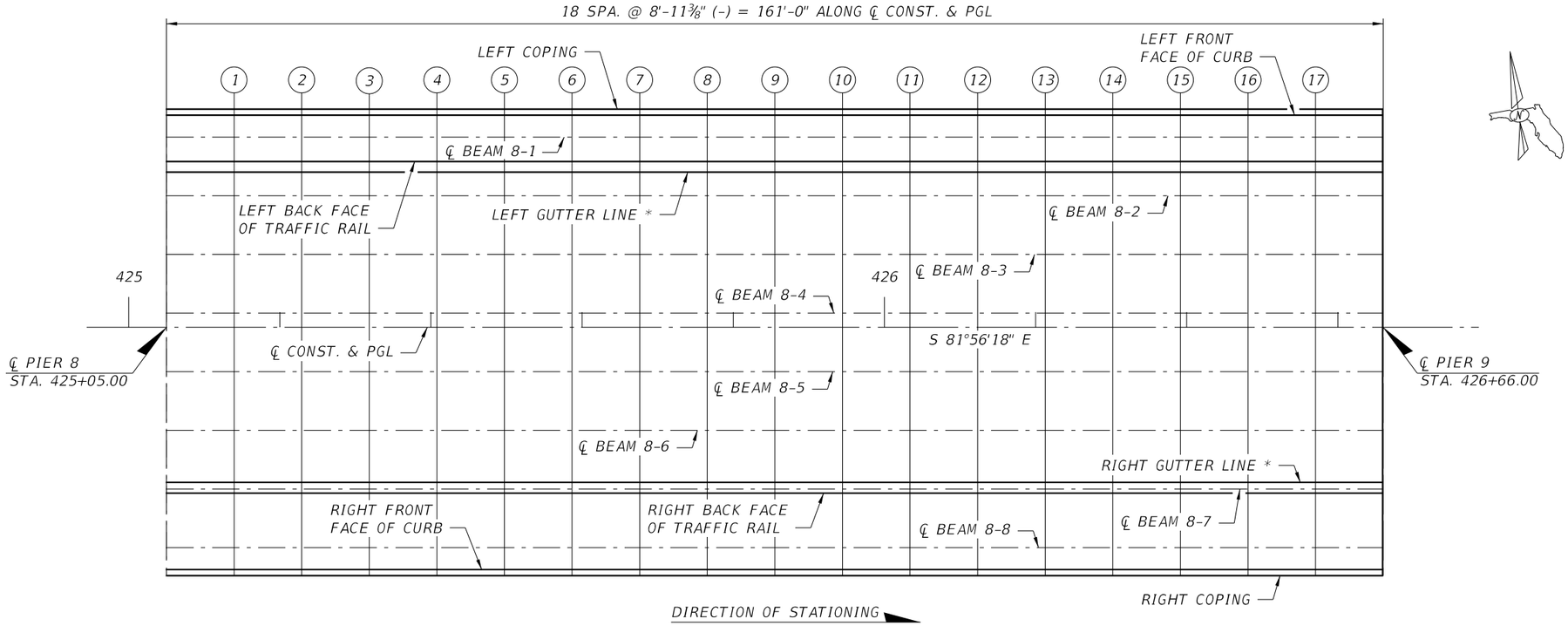

PLAN SHOWING LOCATION OF FINISH GRADE ELEVATIONS
SPAN 8

FINISH GRADE ELEVATIONS

LOCATION/POINTS	℄ PIER 8	SPAN 8																	℄ PIER 9
		1	2	3	4	5	6	7	8	9	10	11	12	13	14	15	16	17	
LEFT COPING	70.485	70.515	70.533	70.540	70.535	70.519	70.491	70.452	70.402	70.340	70.266	70.182	70.086	69.978	69.859	69.728	69.587	69.433	69.268
LEFT FRONT FACE OF CURB	70.501	70.531	70.549	70.556	70.551	70.535	70.507	70.468	70.417	70.356	70.282	70.198	70.101	69.994	69.875	69.744	69.602	69.449	69.284
℄ BEAM 8-1	70.560	70.589	70.607	70.614	70.609	70.593	70.565	70.526	70.476	70.414	70.341	70.256	70.160	70.052	69.933	69.803	69.661	69.507	69.343
LEFT BACK FACE OF TRAFFIC RAIL	70.624	70.653	70.671	70.678	70.673	70.657	70.629	70.590	70.540	70.478	70.405	70.320	70.224	70.116	69.997	69.867	69.725	69.572	69.407
LEFT GUTTER LINE *	70.652	70.682	70.700	70.706	70.702	70.685	70.658	70.619	70.568	70.506	70.433	70.348	70.252	70.145	70.026	69.895	69.753	69.600	69.435
℄ BEAM 8-2	70.715	70.744	70.762	70.769	70.764	70.748	70.720	70.681	70.631	70.569	70.496	70.411	70.315	70.207	70.088	69.958	69.816	69.662	69.498
℄ BEAM 8-3	70.870	70.899	70.917	70.924	70.919	70.903	70.875	70.836	70.786	70.724	70.651	70.566	70.470	70.362	70.243	70.113	69.971	69.817	69.653
℄ BEAM 8-4	71.025	71.054	71.072	71.079	71.074	71.058	71.030	70.991	70.941	70.879	70.806	70.721	70.625	70.517	70.398	70.268	70.126	69.972	69.808
℄ CONST. & PGL	71.062	71.092	71.110	71.116	71.112	71.095	71.068	71.029	70.978	70.916	70.843	70.758	70.662	70.555	70.436	70.305	70.163	70.010	69.845
℄ BEAM 8-5	70.945	70.974	70.992	70.999	70.994	70.978	70.950	70.911	70.861	70.799	70.726	70.641	70.545	70.437	70.318	70.188	70.046	69.892	69.728
℄ BEAM 8-6	70.790	70.819	70.837	70.844	70.839	70.823	70.795	70.756	70.706	70.644	70.571	70.486	70.390	70.282	70.163	70.033	69.891	69.737	69.573
RIGHT GUTTER LINE*	70.652	70.682	70.700	70.706	70.702	70.685	70.658	70.619	70.568	70.506	70.433	70.348	70.252	70.145	70.026	69.895	69.753	69.600	69.435
℄ BEAM 8-7	70.635	70.664	70.682	70.689	70.684	70.668	70.640	70.601	70.551	70.489	70.416	70.331	70.235	70.127	70.008	69.878	69.736	69.582	69.418
RIGHT BACK FACE OF TRAFFIC RAIL	70.624	70.653	70.671	70.678	70.673	70.657	70.629	70.590	70.540	70.478	70.405	70.320	70.224	70.116	69.997	69.867	69.725	69.572	69.407
℄ BEAM 8-8	70.480	70.509	70.527	70.534	70.529	70.513	70.485	70.446	70.396	70.334	70.261	70.176	70.080	69.972	69.853	69.723	69.581	69.427	69.263
RIGHT FRONT FACE OF CURB	70.421	70.451	70.469	70.476	70.471	70.455	70.427	70.388	70.337	70.276	70.202	70.118	70.021	69.914	69.795	69.664	69.522	69.369	69.204
RIGHT COPING	70.405	70.435	70.453	70.460	70.455	70.439	70.411	70.372	70.322	70.260	70.186	70.102	70.006	69.898	69.779	69.648	69.507	69.353	69.188

* FRONT FACE OF TRAFFIC RAIL

BRIDGE NO. 124143

REVISIONS					
DATE	BY	DESCRIPTION	DATE	BY	DESCRIPTION

Kisinger Campo & Associates Corp.
201 N. Franklin Street
Suite 400
Tampa, FL 33602
Alfredo Jose Layrisse, PE No. 75610

DRAWN BY:	CHECKED BY:	DESIGNED BY:	CHECKED BY:
SKB 10-19	AJL 10-19	SKB 10-19	PDM 02-20

LEE COUNTY PUBLIC WORKS
DEPARTMENT OF TRANSPORTATION

ROAD NO.	COUNTY	COUNTY PROJECT No
CR 865	LEE	CN160002

SHEET TITLE: FINISH GRADE ELEVATIONS (11 OF 17)

REF. DWG. NO.:

PROJECT NAME: ESTERO BLVD. (CR 865) OVER BIG CARLOS PASS

SHEET NO.: B1-75

NOTICE: THE OFFICIAL RECORD OF THIS SHEET IS THE ELECTRONIC FILE DIGITALLY SIGNED AND SEALED UNDER RULE 61G15-23.004, F.A.C.

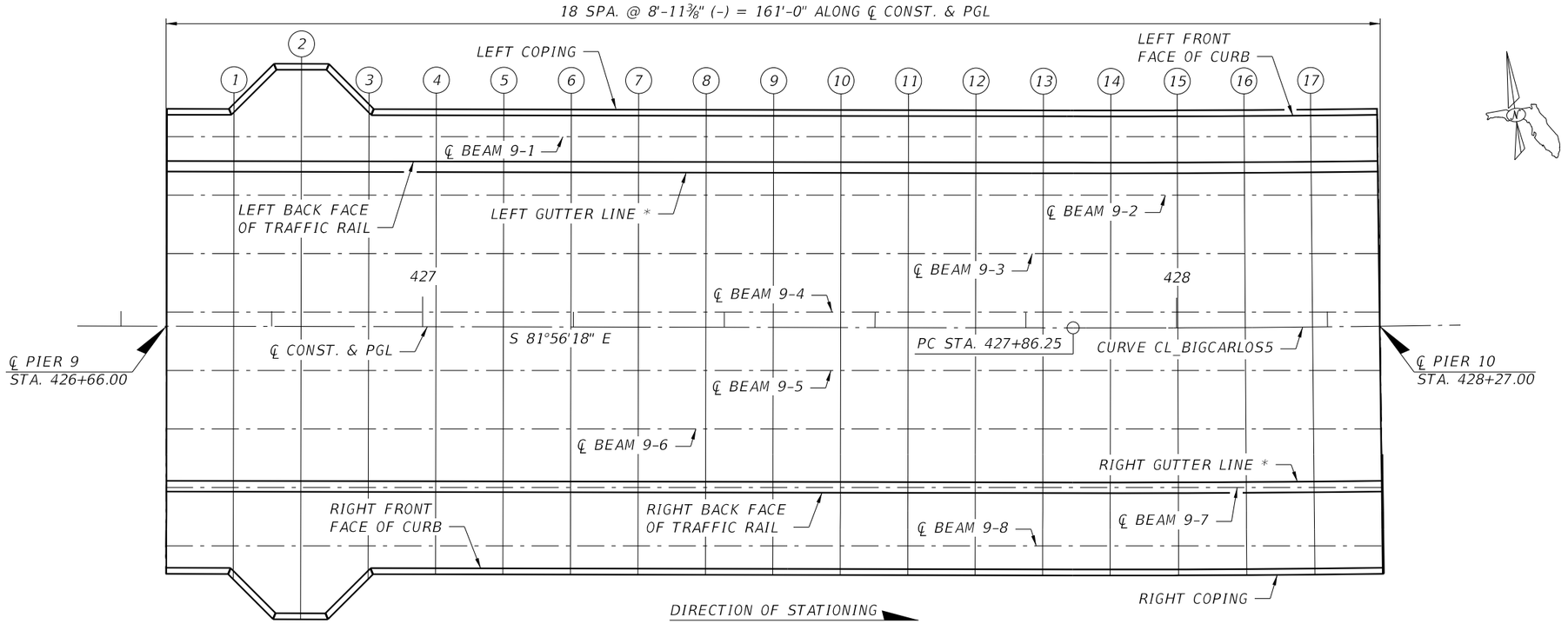

PLAN SHOWING LOCATION OF FINISH GRADE ELEVATIONS
SPAN 9

FINISH GRADE ELEVATIONS

LOCATION/POINTS	℄ PIER 9	SPAN 9																	℄ PIER 10
		1	2	3	4	5	6	7	8	9	10	11	12	13	14	15	16	17	
LEFT COPING	69.268	69.078	68.785	68.693	68.495	68.273	68.040	67.795	67.539	67.271	66.992	66.702	66.400	66.087	65.762	65.426	65.078	64.719	64.349
LEFT FRONT FACE OF CURB	69.284	69.101	68.800	68.714	68.511	68.289	68.056	67.811	67.555	67.287	67.008	66.718	66.416	66.102	65.778	65.441	65.094	64.735	64.364
℄ BEAM 9-1	69.343	69.166	68.978	68.779	68.568	68.346	68.112	67.867	67.611	67.343	67.063	66.772	66.470	66.157	65.832	65.496	65.149	64.791	64.423
LEFT BACK FACE OF TRAFFIC RAIL	69.407	69.231	69.043	68.844	68.633	68.412	68.178	67.933	67.677	67.410	67.131	66.840	66.538	66.225	65.900	65.564	65.216	64.857	64.487
LEFT GUTTER LINE *	69.435	69.259	69.071	68.872	68.662	68.440	68.207	67.962	67.706	67.438	67.159	66.868	66.567	66.253	65.928	65.592	65.245	64.886	64.515
℄ BEAM 9-2	69.498	69.321	69.133	68.934	68.723	68.501	68.267	68.022	67.766	67.498	67.218	66.927	66.625	66.312	65.987	65.651	65.304	64.946	64.578
℄ BEAM 9-3	69.653	69.476	69.288	69.089	68.878	68.656	68.422	68.177	67.921	67.653	67.373	67.082	66.780	66.467	66.142	65.806	65.459	65.101	64.733
℄ BEAM 9-4	69.808	69.631	69.443	69.244	69.033	68.811	68.577	68.332	68.076	67.808	67.528	67.237	66.935	66.622	66.297	65.961	65.614	65.256	64.888
℄ CONST. & PGL	69.845	69.669	69.481	69.282	69.072	68.850	68.617	68.372	68.116	67.848	67.569	67.278	66.977	66.663	66.338	66.002	65.655	65.296	64.925
℄ BEAM 9-5	69.728	69.552	69.364	69.166	68.956	68.734	68.501	68.257	68.001	67.733	67.455	67.165	66.863	66.550	66.225	65.889	65.541	65.180	64.808
℄ BEAM 9-6	69.573	69.397	69.209	69.011	68.801	68.579	68.346	68.102	67.846	67.578	67.300	67.010	66.708	66.395	66.070	65.734	65.386	65.025	64.653
RIGHT GUTTER LINE *	69.435	69.259	69.071	68.872	68.662	68.440	68.207	67.962	67.706	67.438	67.159	66.868	66.567	66.253	65.928	65.592	65.245	64.886	64.515
℄ BEAM 9-7	69.418	69.242	69.054	68.856	68.646	68.424	68.191	67.947	67.691	67.423	67.145	66.855	66.553	66.240	65.915	65.579	65.231	64.870	64.498
RIGHT BACK FACE OF TRAFFIC RAIL	69.407	69.231	69.043	68.844	68.633	68.412	68.178	67.933	67.677	67.410	67.131	66.840	66.538	66.225	65.900	65.564	65.216	64.857	64.487
℄ BEAM 9-8	69.263	69.087	68.899	68.701	68.491	68.269	68.036	67.792	67.536	67.268	66.990	66.700	66.398	66.085	65.760	65.424	65.076	64.715	64.343
RIGHT FRONT FACE OF CURB	69.204	69.021	68.720	68.634	68.431	68.209	67.976	67.731	67.475	67.207	66.928	66.638	66.336	66.022	65.698	65.361	65.014	64.655	64.284
RIGHT COPING	69.188	68.998	68.705	68.613	68.415	68.193	67.960	67.715	67.459	67.191	66.912	66.622	66.320	66.007	65.682	65.346	64.998	64.639	64.269

* FRONT FACE OF TRAFFIC RAIL

BRIDGE NO. 124143

REVISIONS					
DATE	BY	DESCRIPTION	DATE	BY	DESCRIPTION

Kisinger Campo & Associates Corp.
201 N. Franklin Street
Suite 400
Tampa, FL 33602
Alfredo Jose Layrisse, PE No. 75610

DRAWN BY:	CHECKED BY:	DESIGNED BY:	CHECKED BY:
SKB 10-19	AJL 10-19	SKB 10-19	PDM 02-20

LEE COUNTY PUBLIC WORKS
DEPARTMENT OF TRANSPORTATION

ROAD NO.	COUNTY	COUNTY PROJECT No
CR 865	LEE	CN160002

SHEET TITLE: FINISH GRADE ELEVATIONS (12 OF 17)

REF. DWG. NO.:

PROJECT NAME: ESTERO BLVD. (CR 865) OVER BIG CARLOS PASS

SHEET NO.: B1-76

NOTICE: THE OFFICIAL RECORD OF THIS SHEET IS THE ELECTRONIC FILE DIGITALLY SIGNED AND SEALED UNDER RULE 61G15-23.004, F.A.C.

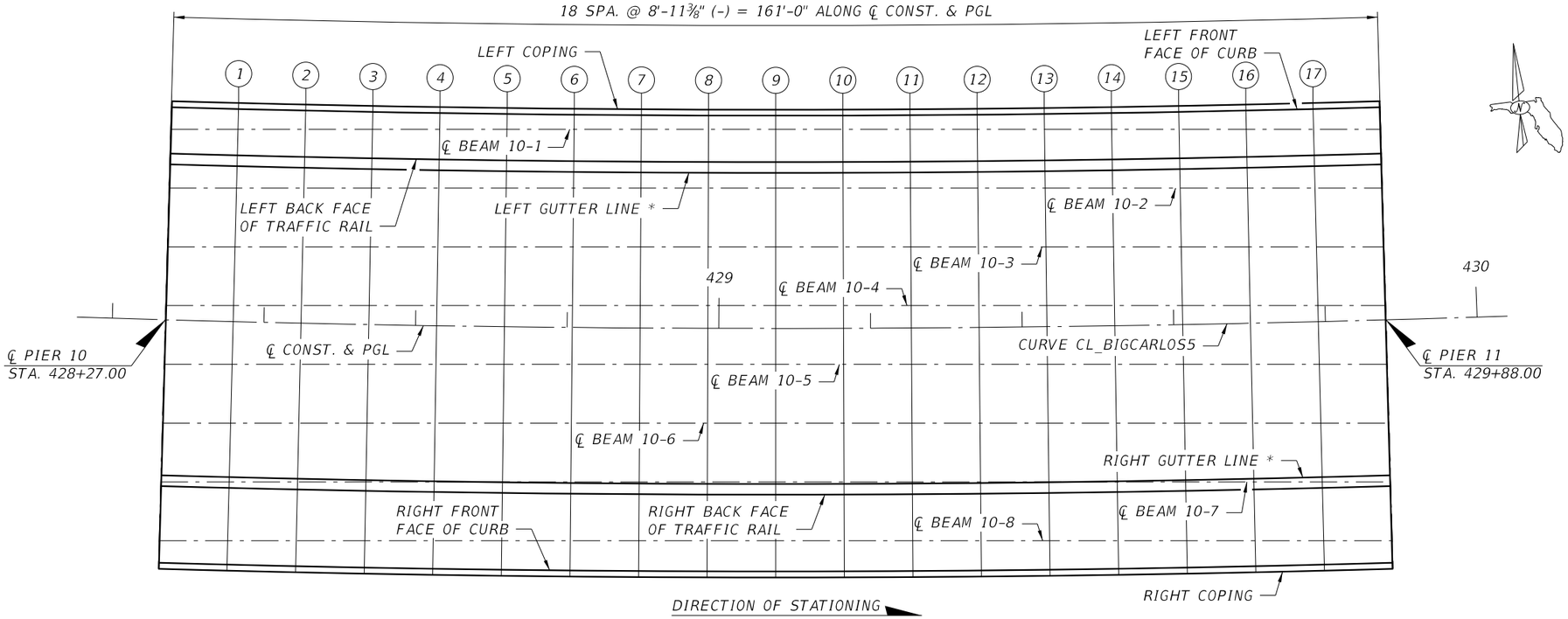

PLAN SHOWING LOCATION OF FINISH GRADE ELEVATIONS

SPAN 10

FINISH GRADE ELEVATIONS

LOCATION/POINTS	℄ PIER 10	SPAN 10																	℄ PIER 11
		1	2	3	4	5	6	7	8	9	10	11	12	13	14	15	16	17	
LEFT COPING	64.349	63.967	63.573	63.168	62.752	62.325	61.886	61.439	60.991	60.544	60.097	59.650	59.203	58.755	58.308	57.861	57.414	56.966	56.519
LEFT FRONT FACE OF CURB	64.364	63.982	63.589	63.184	62.768	62.341	61.901	61.455	61.007	60.560	60.113	59.666	59.218	58.771	58.324	57.877	57.430	56.982	56.535
℄ BEAM 10-1	64.422	64.036	63.638	63.230	62.811	62.381	61.940	61.491	61.043	60.596	60.149	59.702	59.257	58.811	58.367	57.922	57.479	57.036	56.593
LEFT BACK FACE OF TRAFFIC RAIL	64.487	64.105	63.712	63.307	62.891	62.463	62.024	61.577	61.130	60.683	60.235	59.788	59.341	58.894	58.446	57.999	57.552	57.105	56.658
LEFT GUTTER LINE *	64.515	64.133	63.740	63.335	62.919	62.491	62.052	61.605	61.158	60.711	60.264	59.816	59.369	58.922	58.475	58.028	57.580	57.133	56.686
℄ BEAM 10-2	64.578	64.191	63.793	63.385	62.966	62.536	62.095	61.646	61.198	60.751	60.304	59.857	59.412	58.966	58.522	58.077	57.634	57.191	56.748
℄ BEAM 10-3	64.733	64.346	63.948	63.540	63.121	62.691	62.250	61.801	61.353	60.906	60.459	60.012	59.567	59.121	58.677	58.232	57.789	57.346	56.903
℄ BEAM 10-4	64.888	64.501	64.103	63.695	63.276	62.846	62.405	61.956	61.508	61.061	60.614	60.167	59.722	59.276	58.832	58.387	57.944	57.501	57.058
℄ CONST. & PGL	64.925	64.543	64.150	63.745	63.329	62.901	62.462	62.015	61.568	61.121	60.674	60.226	59.779	59.332	58.885	58.438	57.990	57.543	57.096
℄ BEAM 10-5	64.808	64.430	64.041	63.640	63.227	62.802	62.365	61.919	61.473	61.026	60.579	60.130	59.682	59.233	58.783	58.333	57.882	57.430	56.978
℄ BEAM 10-6	64.653	64.275	63.886	63.485	63.072	62.647	62.210	61.764	61.318	60.871	60.424	59.975	59.527	59.078	58.628	58.178	57.727	57.275	56.823
RIGHT GUTTER LINE *	64.515	64.133	63.740	63.335	62.919	62.491	62.052	61.605	61.158	60.711	60.264	59.816	59.369	58.922	58.475	58.028	57.580	57.133	56.686
℄ BEAM 10-7	64.498	64.120	63.731	63.330	62.917	62.492	62.055	61.609	61.163	60.716	60.269	59.820	59.372	58.923	58.473	58.023	57.572	57.120	56.668
RIGHT BACK FACE OF TRAFFIC RAIL	64.487	64.105	63.712	63.307	62.891	62.463	62.024	61.577	61.130	60.683	60.235	59.788	59.341	58.894	58.446	57.999	57.552	57.105	56.658
℄ BEAM 10-8	64.342	63.965	63.576	63.175	62.762	62.337	61.900	61.454	61.008	60.561	60.114	59.665	59.217	58.768	58.318	57.868	57.417	56.965	56.513
RIGHT FRONT FACE OF CURB	64.284	63.902	63.509	63.104	62.688	62.261	61.821	61.375	60.927	60.480	60.033	59.586	59.138	58.691	58.244	57.797	57.350	56.902	56.455
RIGHT COPING	64.269	63.887	63.493	63.088	62.672	62.245	61.806	61.359	60.911	60.464	60.017	59.570	59.123	58.675	58.228	57.781	57.334	56.886	56.439

* FRONT FACE OF TRAFFIC RAIL

BRIDGE NO. 124143

NOTICE: THE OFFICIAL RECORD OF THIS SHEET IS THE ELECTRONIC FILE DIGITALLY SIGNED AND SEALED UNDER RULE 61G15-23.004, F.A.C.

REVISIONS					
DATE	BY	DESCRIPTION	DATE	BY	DESCRIPTION

Kisinger Campo & Associates Corp.
201 N. Franklin Street
Suite 400
Tampa, FL 33602
Alfredo Jose Layrisse, PE No. 75610

DRAWN BY: SKB 10-19
CHECKED BY: AJL 10-19
DESIGNED BY: SKB 10-19
CHECKED BY: PDM 02-20

LEE COUNTY PUBLIC WORKS
DEPARTMENT OF TRANSPORTATION

ROAD NO.	COUNTY	COUNTY PROJECT No
CR 865	LEE	CN160002

SHEET TITLE: FINISH GRADE ELEVATIONS (13 OF 17)

REF. DWG. NO.

PROJECT NAME: ESTERO BLVD. (CR 865) OVER BIG CARLOS PASS

SHEET NO. B1-77

jhanna 2/24/2022 3:18:37 PM c:\pwworkingdir\kca-pw.bentley.com_kca-pw-01\josh hanna\dms00783\B1FinishGrEL13.dgn

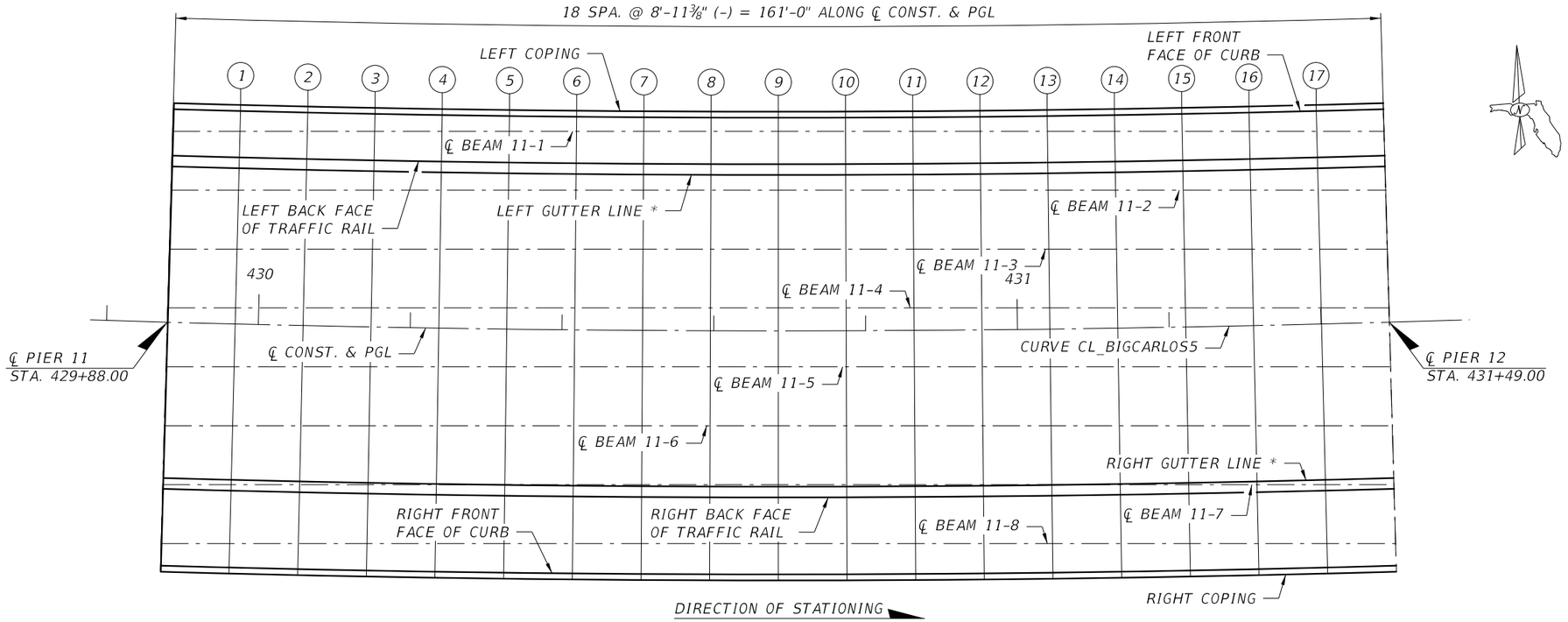

PLAN SHOWING LOCATION OF FINISH GRADE ELEVATIONS
SPAN 11

FINISH GRADE ELEVATIONS

LOCATION/POINTS	℄ PIER 11	SPAN 11																	℄ PIER 12
		1	2	3	4	5	6	7	8	9	10	11	12	13	14	15	16	17	
LEFT COPING	56.519	56.072	55.625	55.178	54.730	54.283	53.836	53.389	52.941	52.494	52.047	51.600	51.153	50.705	50.258	49.811	49.364	48.916	48.469
LEFT FRONT FACE OF CURB	56.535	56.088	55.641	55.193	54.746	54.299	53.852	53.405	52.957	52.510	52.063	51.616	51.168	50.721	50.274	49.827	49.380	48.932	48.485
℄ BEAM 11-1	56.593	56.141	55.690	55.239	54.789	54.339	53.890	53.441	52.993	52.546	52.099	51.652	51.207	50.761	50.317	49.872	49.429	48.986	48.543
LEFT BACK FACE OF TRAFFIC RAIL	56.658	56.210	55.763	55.316	54.869	54.421	53.974	53.527	53.080	52.633	52.185	51.738	51.291	50.844	50.396	49.949	49.502	49.055	48.608
LEFT GUTTER LINE *	56.686	56.239	55.791	55.344	54.897	54.450	54.003	53.555	53.108	52.661	52.214	51.766	51.319	50.872	50.425	49.978	49.530	49.083	48.636
℄ BEAM 11-2	56.748	56.296	55.845	55.394	54.944	54.494	54.045	53.596	53.148	52.701	52.254	51.807	51.362	50.916	50.472	50.027	49.584	49.141	48.698
℄ BEAM 11-3	56.903	56.451	56.000	55.549	55.099	54.649	54.200	53.751	53.303	52.856	52.409	51.962	51.517	51.071	50.627	50.182	49.739	49.296	48.853
℄ BEAM 11-4	57.058	56.606	56.155	55.704	55.254	54.804	54.355	53.906	53.458	53.011	52.564	52.117	51.672	51.226	50.782	50.337	49.894	49.451	49.008
℄ CONST. & PGL	57.096	56.649	56.201	55.754	55.307	54.860	54.413	53.965	53.518	53.071	52.624	52.176	51.729	51.282	50.835	50.388	49.940	49.493	49.046
℄ BEAM 11-5	56.978	56.536	56.093	55.649	55.205	54.760	54.315	53.869	53.423	52.976	52.529	52.080	51.632	51.183	50.733	50.283	49.832	49.380	48.928
℄ BEAM 11-6	56.823	56.381	55.938	55.494	55.050	54.605	54.160	53.714	53.268	52.821	52.374	51.925	51.477	51.028	50.578	50.128	49.677	49.225	48.773
RIGHT GUTTER LINE *	56.686	56.239	55.791	55.344	54.897	54.450	54.003	53.555	53.108	52.661	52.214	51.766	51.319	50.872	50.425	49.978	49.530	49.083	48.636
℄ BEAM 11-7	56.668	56.226	55.783	55.339	54.895	54.450	54.005	53.559	53.113	52.666	52.219	51.770	51.322	50.873	50.423	49.973	49.522	49.070	48.618
RIGHT BACK FACE OF TRAFFIC RAIL	56.658	56.210	55.763	55.316	54.869	54.421	53.974	53.527	53.080	52.633	52.185	51.738	51.291	50.844	50.396	49.949	49.502	49.055	48.608
℄ BEAM 11-8	56.513	56.071	55.628	55.184	54.740	54.295	53.850	53.404	52.958	52.511	52.064	51.615	51.167	50.718	50.268	49.818	49.367	48.915	48.463
RIGHT FRONT FACE OF CURB	56.455	56.008	55.561	55.113	54.666	54.219	53.772	53.325	52.877	52.430	51.983	51.536	51.088	50.641	50.194	49.747	49.300	48.852	48.405
RIGHT COPING	56.439	55.992	55.545	55.098	54.650	54.203	53.756	53.309	52.861	52.414	51.967	51.520	51.073	50.625	50.178	49.731	49.284	48.836	48.389

* FRONT FACE OF TRAFFIC RAIL

BRIDGE NO. 124143

NOTICE: THE OFFICIAL RECORD OF THIS SHEET IS THE ELECTRONIC FILE DIGITALLY SIGNED AND SEALED UNDER RULE 61G15-23.004, F.A.C.

REVISIONS

DATE	BY	DESCRIPTION	DATE	BY	DESCRIPTION

Kisinger Campo & Associates Corp.
201 N. Franklin Street
Suite 400
Tampa, FL 33602
Alfredo Jose Layrisse, PE No. 75610

DRAWN BY: SKB 10-19
CHECKED BY: AJL 10-19
DESIGNED BY: SKB 10-19
CHECKED BY: PDM 02-20

LEE COUNTY PUBLIC WORKS
DEPARTMENT OF TRANSPORTATION

ROAD NO.	COUNTY	COUNTY PROJECT No
CR 865	LEE	CN160002

SHEET TITLE: FINISH GRADE ELEVATIONS (14 OF 17)

REF. DWG. NO.:

PROJECT NAME: ESTERO BLVD. (CR 865) OVER BIG CARLOS PASS

SHEET NO.: B1-78

jhanna 2/24/2022 3:18:43 PM c:\pwworkingdir\kca-pw.bentley.com_kca-pw-01\josh hanna\dms00783\B1FinishGrEL14.dgn

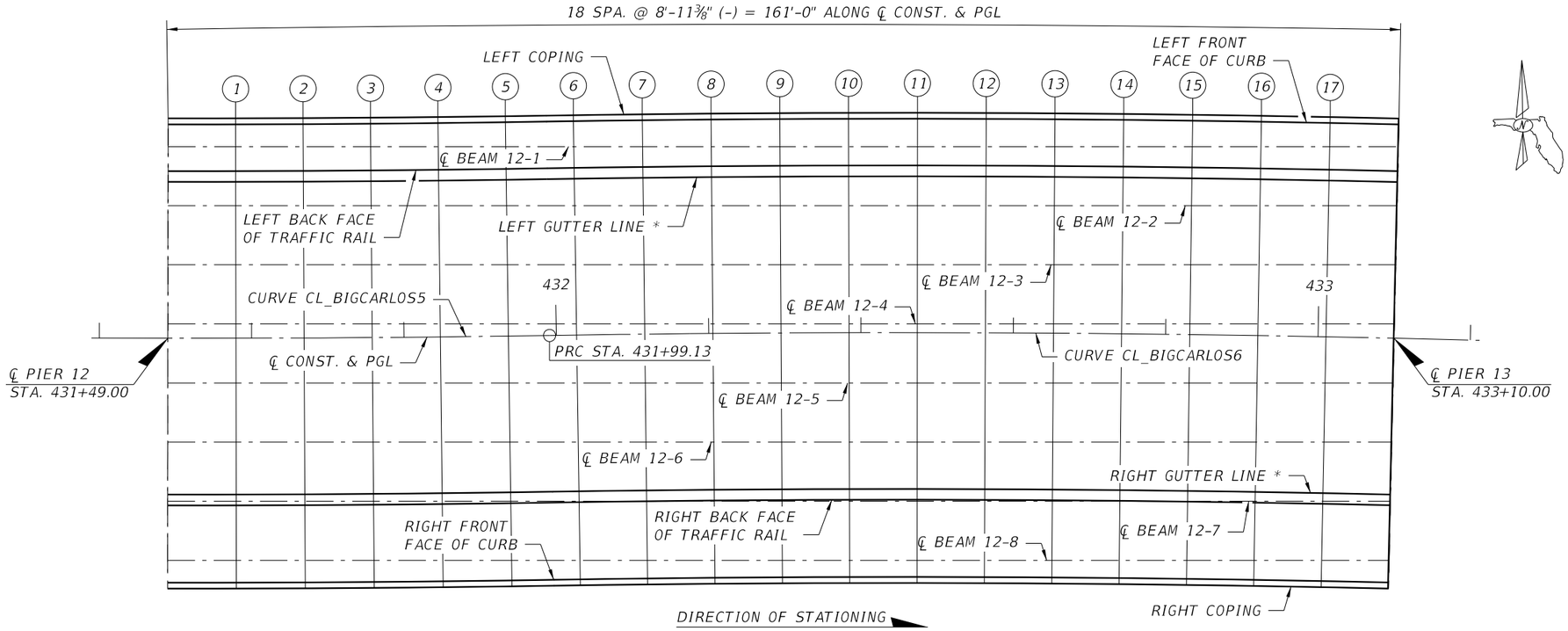

PLAN SHOWING LOCATION OF FINISH GRADE ELEVATIONS

SPAN 12

FINISH GRADE ELEVATIONS

LOCATION/POINTS	℄ PIER 12	SPAN 12																	℄ PIER 13
		1	2	3	4	5	6	7	8	9	10	11	12	13	14	15	16	17	
LEFT COPING	48.469	48.022	47.575	47.128	46.680	46.233	45.786	45.339	44.891	44.444	43.997	43.550	43.103	42.655	42.208	41.761	41.314	40.866	40.419
LEFT FRONT FACE OF CURB	48.485	48.038	47.591	47.143	46.696	46.249	45.802	45.355	44.907	44.460	44.013	43.566	43.118	42.671	42.224	41.777	41.330	40.882	40.435
℄ BEAM 12-1	48.543	48.096	47.650	47.203	46.758	46.313	45.868	45.424	44.978	44.532	44.086	43.639	43.191	42.743	42.294	41.845	41.395	40.944	40.493
LEFT BACK FACE OF TRAFFIC RAIL	48.608	48.160	47.713	47.266	46.819	46.371	45.924	45.477	45.030	44.583	44.135	43.688	43.241	42.794	42.346	41.899	41.452	41.005	40.558
LEFT GUTTER LINE *	48.636	48.189	47.741	47.294	46.847	46.400	45.953	45.505	45.058	44.611	44.164	43.716	43.269	42.822	42.375	41.928	41.480	41.033	40.586
℄ BEAM 12-2	48.698	48.251	47.805	47.358	46.913	46.468	46.023	45.579	45.133	44.687	44.241	43.794	43.346	42.898	42.449	42.000	41.550	41.099	40.648
℄ BEAM 12-3	48.853	48.406	47.960	47.513	47.068	46.623	46.178	45.734	45.288	44.842	44.396	43.949	43.501	43.053	42.604	42.155	41.705	41.254	40.803
℄ BEAM 12-4	49.008	48.561	48.115	47.668	47.223	46.778	46.333	45.889	45.443	44.997	44.551	44.104	43.656	43.208	42.759	42.310	41.860	41.409	40.958
℄ CONST. & PGL	49.046	48.599	48.151	47.704	47.257	46.810	46.363	45.915	45.468	45.021	44.574	44.126	43.679	43.232	42.785	42.338	41.890	41.443	40.996
℄ BEAM 12-5	48.928	48.481	48.033	47.585	47.136	46.687	46.237	45.787	45.338	44.890	44.442	43.994	43.547	43.101	42.656	42.210	41.766	41.322	40.878
℄ BEAM 12-6	48.773	48.326	47.878	47.430	46.981	46.532	46.082	45.632	45.183	44.735	44.287	43.839	43.392	42.946	42.501	42.055	41.611	41.167	40.723
RIGHT GUTTER LINE *	48.636	48.189	47.741	47.294	46.847	46.400	45.953	45.505	45.058	44.611	44.164	43.716	43.269	42.822	42.375	41.928	41.480	41.033	40.586
℄ BEAM 12-7	48.618	48.171	47.723	47.275	46.826	46.377	45.927	45.477	45.028	44.580	44.132	43.684	43.237	42.791	42.346	41.900	41.456	41.012	40.568
RIGHT BACK FACE OF TRAFFIC RAIL	48.608	48.160	47.713	47.266	46.819	46.371	45.924	45.477	45.030	44.583	44.135	43.688	43.241	42.794	42.346	41.899	41.452	41.005	40.558
℄ BEAM 12-8	48.463	48.016	47.568	47.120	46.671	46.222	45.772	45.322	44.873	44.425	43.977	43.529	43.082	42.636	42.191	41.745	41.301	40.857	40.413
RIGHT FRONT FACE OF CURB	48.405	47.958	47.511	47.063	46.616	46.169	45.722	45.275	44.827	44.380	43.933	43.486	43.038	42.591	42.144	41.697	41.250	40.802	40.355
RIGHT COPING	48.389	47.942	47.495	47.048	46.600	46.153	45.706	45.259	44.811	44.364	43.917	43.470	43.023	42.575	42.128	41.681	41.234	40.786	40.339

* FRONT FACE OF TRAFFIC RAIL

BRIDGE NO. 124143

NOTICE: THE OFFICIAL RECORD OF THIS SHEET IS THE ELECTRONIC FILE DIGITALLY SIGNED AND SEALED UNDER RULE 61G15-23.004, F.A.C.

REVISIONS					
DATE	BY	DESCRIPTION	DATE	BY	DESCRIPTION

Kisinger Campo & Associates Corp.
201 N. Franklin Street
Suite 400
Tampa, FL 33602
Alfredo Jose Layrisse, PE No. 75610

DRAWN BY:	CHECKED BY:	DESIGNED BY:	CHECKED BY:
SKB 10-19	AJL 10-19	SKB 10-19	PDM 02-20

LEE COUNTY PUBLIC WORKS
DEPARTMENT OF TRANSPORTATION

ROAD NO.	COUNTY	COUNTY PROJECT No
CR 865	LEE	CN160002

SHEET TITLE: FINISH GRADE ELEVATIONS (15 OF 17)

REF. DWG. NO.:

PROJECT NAME: ESTERO BLVD. (CR 865) OVER BIG CARLOS PASS

SHEET NO.: B1-79

jhanna 2/24/2022 3:18:47 PM c:\pwworkingdir\kca-pw.bentley.com_kca-pw-01\josh hanna\dms00783\B1FinishGrEL15.dgn

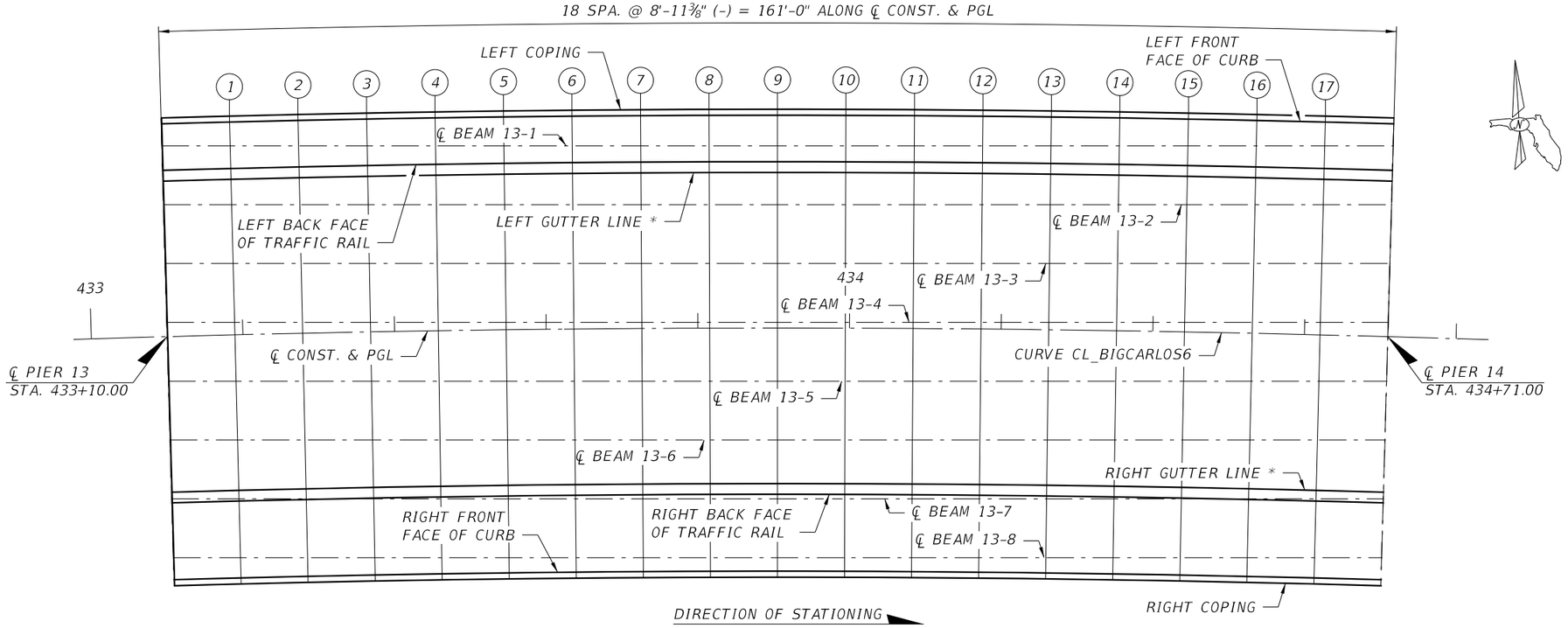

PLAN SHOWING LOCATION OF FINISH GRADE ELEVATIONS
SPAN 13

FINISH GRADE ELEVATIONS

LOCATION/POINTS	℄ PIER 13	SPAN 13																	℄ PIER 14
		1	2	3	4	5	6	7	8	9	10	11	12	13	14	15	16	17	
LEFT COPING	40.419	39.972	39.525	39.078	38.630	38.183	37.736	37.289	36.841	36.394	35.947	35.500	35.053	34.605	34.158	33.711	33.264	32.816	32.369
LEFT FRONT FACE OF CURB	40.435	39.988	39.541	39.093	38.646	38.199	37.752	37.305	36.857	36.410	35.963	35.516	35.068	34.621	34.174	33.727	33.280	32.832	32.385
℄ BEAM 13-1	40.493	40.051	39.608	39.164	38.720	38.275	37.830	37.384	36.938	36.491	36.043	35.595	35.147	34.698	34.248	33.798	33.347	32.895	32.443
LEFT BACK FACE OF TRAFFIC RAIL	40.558	40.110	39.663	39.216	38.769	38.321	37.874	37.427	36.980	36.533	36.085	35.638	35.191	34.744	34.296	33.849	33.402	32.955	32.508
LEFT GUTTER LINE *	40.586	40.139	39.691	39.244	38.797	38.350	37.903	37.455	37.008	36.561	36.114	35.666	35.219	34.772	34.325	33.878	33.430	32.983	32.536
℄ BEAM 13-2	40.648	40.206	39.763	39.319	38.875	38.430	37.985	37.539	37.093	36.646	36.199	35.750	35.302	34.853	34.403	33.953	33.502	33.050	32.598
℄ BEAM 13-3	40.803	40.361	39.918	39.474	39.030	38.585	38.140	37.694	37.248	36.801	36.354	35.905	35.457	35.008	34.558	34.108	33.657	33.205	32.753
℄ BEAM 13-4	40.958	40.516	40.073	39.629	39.185	38.740	38.295	37.849	37.403	36.956	36.509	36.060	35.612	35.163	34.713	34.263	33.812	33.360	32.908
℄ CONST. & PGL	40.996	40.549	40.101	39.654	39.207	38.760	38.313	37.865	37.418	36.971	36.524	36.076	35.629	35.182	34.735	34.288	33.840	33.393	32.946
℄ BEAM 13-5	40.878	40.426	39.975	39.524	39.074	38.624	38.175	37.726	37.278	36.831	36.384	35.937	35.492	35.046	34.602	34.157	33.714	33.271	32.828
℄ BEAM 13-6	40.723	40.271	39.820	39.369	38.919	38.469	38.020	37.571	37.123	36.676	36.229	35.782	35.337	34.891	34.447	34.002	33.559	33.116	32.673
RIGHT GUTTER LINE *	40.586	40.139	39.691	39.244	38.797	38.350	37.903	37.455	37.008	36.561	36.114	35.666	35.219	34.772	34.325	33.878	33.430	32.983	32.536
℄ BEAM 13-7	40.568	40.116	39.665	39.214	38.764	38.314	37.865	37.416	36.968	36.521	36.074	35.627	35.182	34.736	34.292	33.847	33.404	32.961	32.518
RIGHT BACK FACE OF TRAFFIC RAIL	40.558	40.110	39.663	39.216	38.769	38.321	37.874	37.427	36.980	36.533	36.085	35.638	35.191	34.744	34.296	33.849	33.402	32.955	32.508
℄ BEAM 13-8	40.413	39.961	39.510	39.059	38.609	38.159	37.710	37.261	36.813	36.366	35.919	35.472	35.027	34.581	34.137	33.692	33.249	32.806	32.363
RIGHT FRONT FACE OF CURB	40.355	39.908	39.461	39.013	38.566	38.119	37.672	37.225	36.777	36.330	35.883	35.436	34.988	34.541	34.094	33.647	33.200	32.752	32.305
RIGHT COPING	40.339	39.892	39.445	38.998	38.550	38.103	37.656	37.209	36.761	36.314	35.867	35.420	34.973	34.525	34.078	33.631	33.184	32.736	32.289

* FRONT FACE OF TRAFFIC RAIL

BRIDGE NO. 124143

NOTICE: THE OFFICIAL RECORD OF THIS SHEET IS THE ELECTRONIC FILE DIGITALLY SIGNED AND SEALED UNDER RULE 61G15-23.004, F.A.C.

REVISIONS

DATE	BY	DESCRIPTION	DATE	BY	DESCRIPTION

Kisinger Campo & Associates Corp.
201 N. Franklin Street
Suite 400
Tampa, FL 33602
Alfredo Jose Layrisse, PE No. 75610

DRAWN BY: SKB 10-19
CHECKED BY: AJL 10-19
DESIGNED BY: SKB 10-19
CHECKED BY: PDM 02-20

LEE COUNTY PUBLIC WORKS
DEPARTMENT OF TRANSPORTATION

ROAD NO.	COUNTY	COUNTY PROJECT No
CR 865	LEE	CN160002

SHEET TITLE: FINISH GRADE ELEVATIONS (16 OF 17)

REF. DWG. NO.:

PROJECT NAME: ESTERO BLVD. (CR 865) OVER BIG CARLOS PASS

SHEET NO.: B1-80

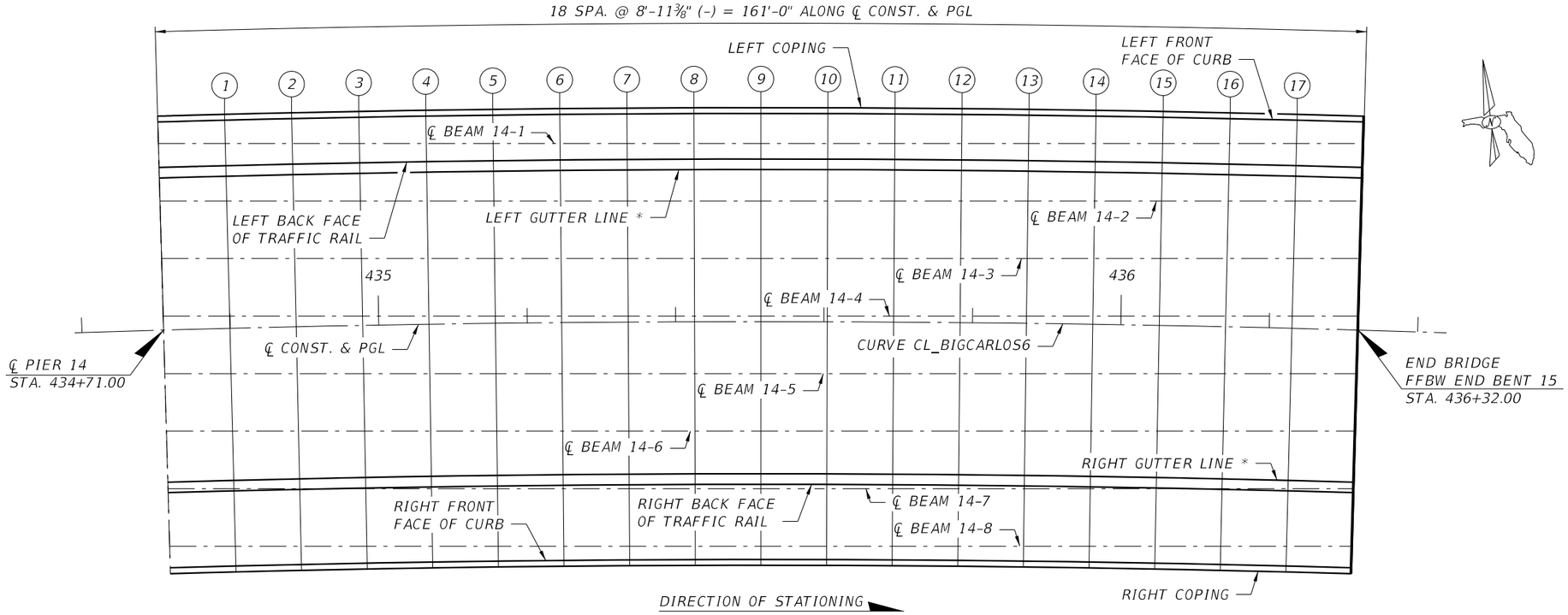

PLAN SHOWING LOCATION OF FINISH GRADE ELEVATIONS
SPAN 14

FINISH GRADE ELEVATIONS

LOCATION/POINTS	℄ PIER 14	SPAN 14																	END BRIDGE
		1	2	3	4	5	6	7	8	9	10	11	12	13	14	15	16	17	
LEFT COPING	32.369	31.922	31.475	31.028	30.580	30.133	29.686	29.239	28.791	28.344	27.897	27.450	27.003	26.555	26.108	25.661	25.214	24.766	24.319
LEFT FRONT FACE OF CURB	32.385	31.938	31.491	31.043	30.596	30.149	29.702	29.255	28.807	28.360	27.913	27.466	27.018	26.571	26.124	25.677	25.230	24.782	24.335
℄ BEAM 14-1	32.443	32.001	31.558	31.114	30.670	30.225	29.780	29.334	28.888	28.441	27.993	27.545	27.097	26.648	26.198	25.748	25.297	24.845	24.393
LEFT BACK FACE OF TRAFFIC RAIL	32.508	32.060	31.613	31.166	30.719	30.271	29.824	29.377	28.930	28.483	28.035	27.588	27.141	26.694	26.246	25.799	25.352	24.905	24.458
LEFT GUTTER LINE *	32.536	32.089	31.641	31.194	30.747	30.300	29.853	29.405	28.958	28.511	28.064	27.616	27.169	26.722	26.275	25.828	25.380	24.933	24.486
℄ BEAM 14-2	32.598	32.156	31.713	31.269	30.825	30.380	29.935	29.489	29.043	28.596	28.149	27.700	27.252	26.803	26.353	25.903	25.452	25.000	24.548
℄ BEAM 14-3	32.753	32.311	31.868	31.424	30.980	30.535	30.090	29.644	29.198	28.751	28.304	27.855	27.407	26.958	26.508	26.058	25.607	25.155	24.703
℄ BEAM 14-4	32.908	32.466	32.023	31.579	31.135	30.690	30.245	29.799	29.353	28.906	28.459	28.010	27.562	27.113	26.663	26.213	25.762	25.310	24.858
℄ CONST. & PGL	32.946	32.499	32.051	31.604	31.157	30.710	30.263	29.815	29.368	28.921	28.474	28.026	27.579	27.132	26.685	26.238	25.790	25.343	24.896
℄ BEAM 14-5	32.828	32.376	31.925	31.474	31.024	30.574	30.125	29.676	29.228	28.781	28.334	27.887	27.442	26.996	26.552	26.107	25.664	25.221	24.778
℄ BEAM 14-6	32.673	32.221	31.770	31.319	30.869	30.419	29.970	29.521	29.073	28.626	28.179	27.732	27.287	26.841	26.397	25.952	25.509	25.066	24.623
RIGHT GUTTER LINE *	32.536	32.089	31.641	31.194	30.747	30.300	29.853	29.405	28.958	28.511	28.064	27.616	27.169	26.722	26.275	25.828	25.380	24.933	24.486
℄ BEAM 14-7	32.518	32.066	31.615	31.164	30.714	30.264	29.815	29.366	28.918	28.471	28.024	27.577	27.132	26.686	26.242	25.797	25.354	24.911	24.468
RIGHT BACK FACE OF TRAFFIC RAIL	32.508	32.060	31.613	31.166	30.719	30.271	29.824	29.377	28.930	28.483	28.035	27.588	27.141	26.694	26.246	25.799	25.352	24.905	24.458
℄ BEAM 14-8	32.363	31.911	31.460	31.009	30.559	30.109	29.660	29.211	28.763	28.316	27.869	27.422	26.977	26.531	26.087	25.642	25.199	24.756	24.313
RIGHT FRONT FACE OF CURB	32.305	31.858	31.411	30.963	30.516	30.069	29.622	29.175	28.727	28.280	27.833	27.386	26.938	26.491	26.044	25.597	25.150	24.702	24.255
RIGHT COPING	32.289	31.842	31.395	30.948	30.500	30.053	29.606	29.159	28.711	28.264	27.817	27.370	26.923	26.475	26.028	25.581	25.134	24.686	24.239

* FRONT FACE OF TRAFFIC RAIL

BRIDGE NO. 124143

REVISIONS

DATE	BY	DESCRIPTION	DATE	BY	DESCRIPTION

Kisinger Campo & Associates Corp.
201 N. Franklin Street
Suite 400
Tampa, FL 33602
Alfredo Jose Layrisse, PE No. 75610

DRAWN BY: SKB 10-19
CHECKED BY: AJL 10-19
DESIGNED BY: SKB 10-19
CHECKED BY: PDM 02-20

LEE COUNTY PUBLIC WORKS
DEPARTMENT OF TRANSPORTATION

ROAD NO.	COUNTY	COUNTY PROJECT No
CR 865	LEE	CN160002

SHEET TITLE: FINISH GRADE ELEVATIONS (17 OF 17)

REF. DWG. NO.:

PROJECT NAME: ESTERO BLVD. (CR 865) OVER BIG CARLOS PASS

SHEET NO.: B1-81

NOTICE: THE OFFICIAL RECORD OF THIS SHEET IS THE ELECTRONIC FILE DIGITALLY SIGNED AND SEALED UNDER RULE 61G15-23.004, F.A.C.

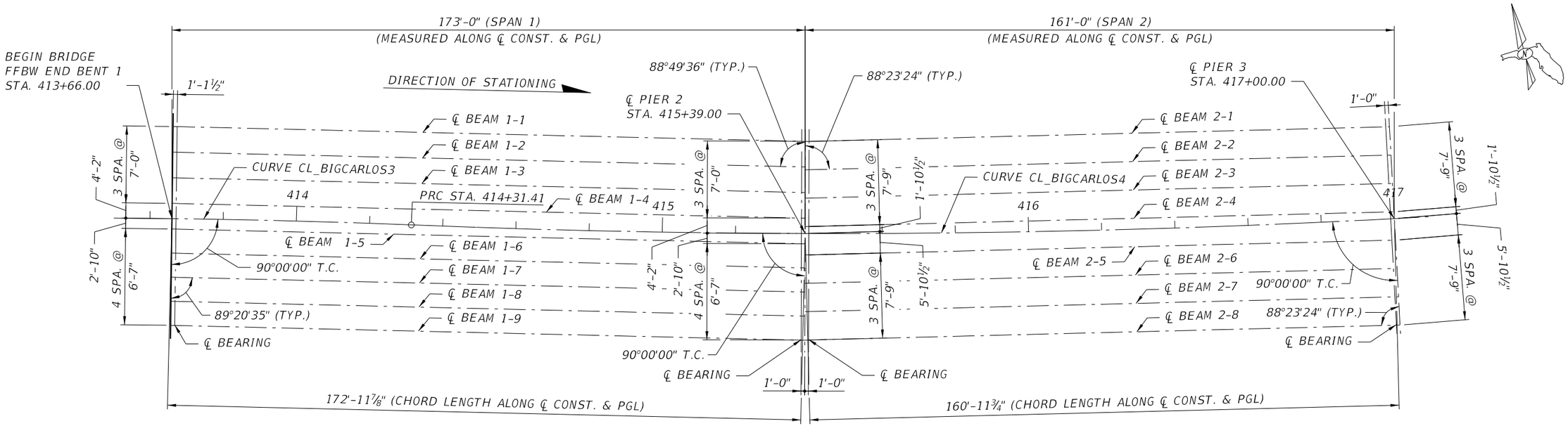

PARTIAL PLAN
(DIAPHRAGMS NOT SHOWN FOR CLARITY)

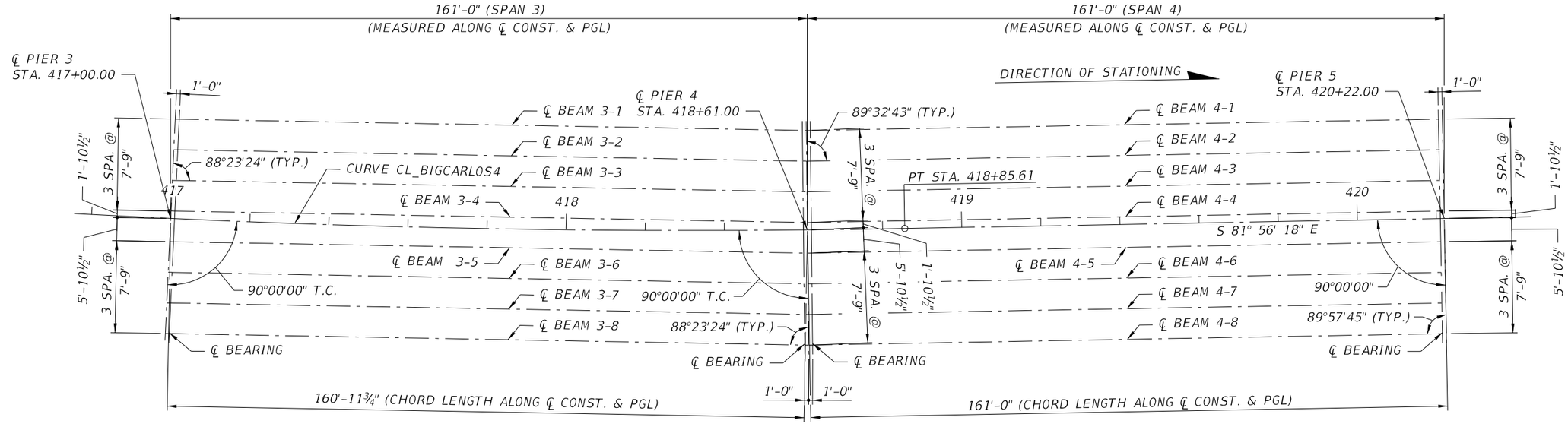

PARTIAL PLAN

NOTES:

1. TEMPORARY BRACING LOCATIONS ARE NOT SHOWN. FOR LOCATIONS OF TEMPORARY BRACING SEE SHEET B1-105 "TABLE OF PRESTRESSED I-BEAM TEMPORARY BRACING MINIMUM REQUIREMENTS AND LOADS".
2. FOR DIAPHRAGM LOCATIONS SEE SHEET B1-112.

BRIDGE NO. 124143

NOTICE: THE OFFICIAL RECORD OF THIS SHEET IS THE ELECTRONIC FILE DIGITALLY SIGNED AND SEALED UNDER RULE 61G15-23.004, F.A.C.

REVISIONS					
DATE	BY	DESCRIPTION	DATE	BY	DESCRIPTION

Kisinger Campo & Associates Corp.
201 N. Franklin Street
Suite 400
Tampa, FL 33602
Alfredo Jose Layrisse, PE No. 75610

DRAWN BY:	CHECKED BY:	DESIGNED BY:	CHECKED BY:
ARF 02-20	AJL 02-20	SKB 09-19	PDM 02-20

LEE COUNTY PUBLIC WORKS
DEPARTMENT OF TRANSPORTATION

ROAD NO.	COUNTY	COUNTY PROJECT No
CR 865	LEE	CN160002

SHEET TITLE: FRAMING PLAN (1 OF 4)

REF. DWG. NO.:

PROJECT NAME: ESTERO BLVD. (CR 865) OVER BIG CARLOS PASS

SHEET NO.: B1-82

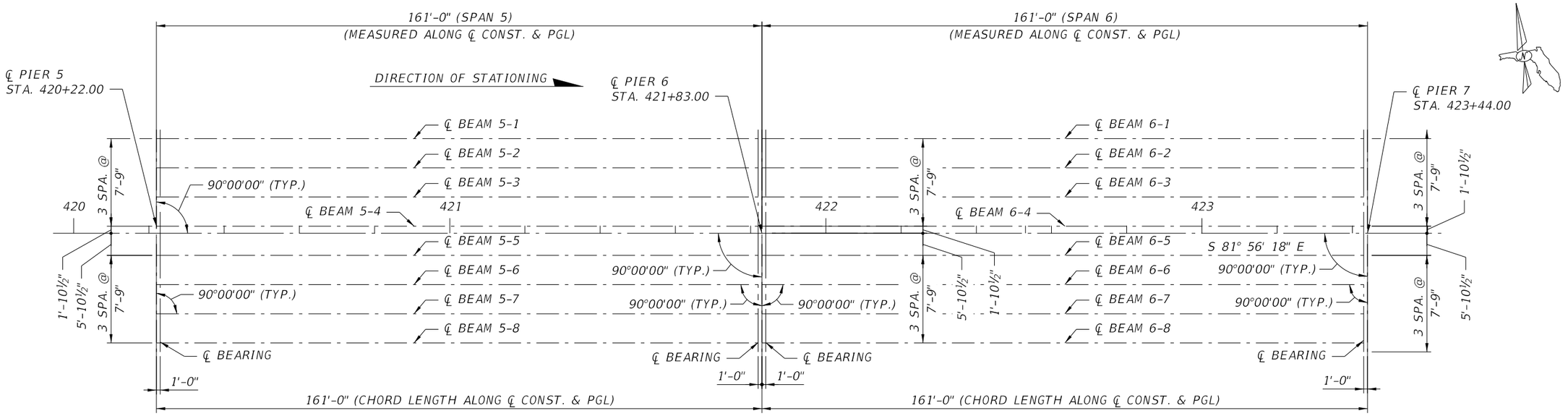

PARTIAL PLAN

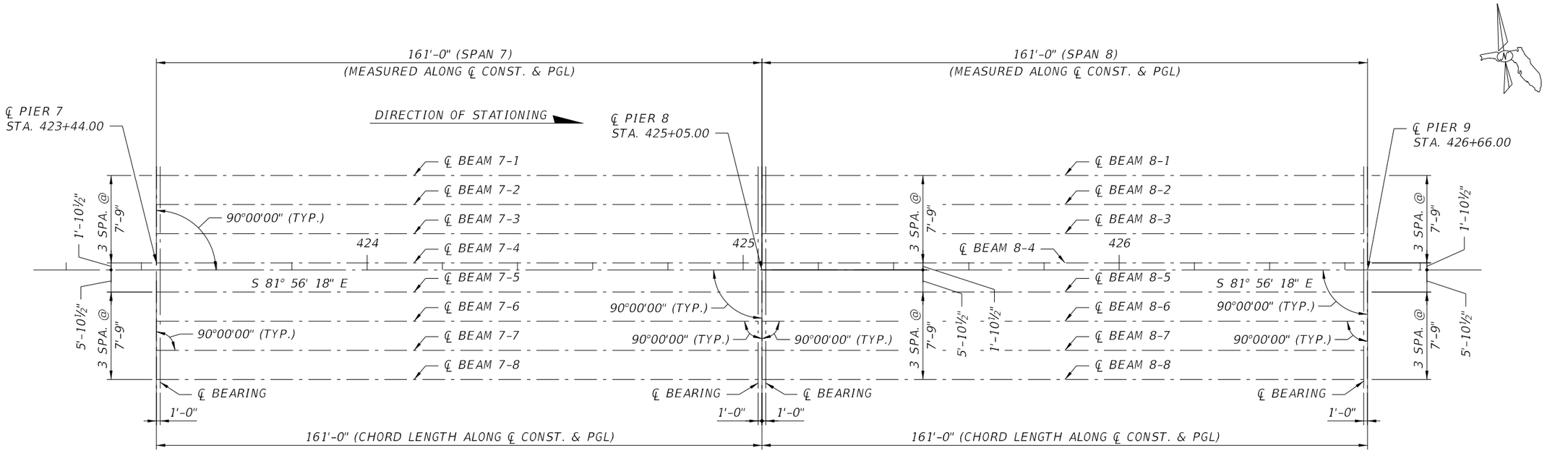

PARTIAL PLAN

NOTE:

TEMPORARY BRACING LOCATIONS ARE NOT SHOWN. FOR LOCATIONS OF TEMPORARY BRACING SEE SHEET B1-105 "TABLE OF PRESTRESSED I-BEAM TEMPORARY BRACING MINIMUM REQUIREMENTS AND LOADS".

BRIDGE NO. 124143

NOTICE: THE OFFICIAL RECORD OF THIS SHEET IS THE ELECTRONIC FILE DIGITALLY SIGNED AND SEALED UNDER RULE 61G15-23.004, F.A.C.

REVISIONS					
DATE	BY	DESCRIPTION	DATE	BY	DESCRIPTION

Kisinger Campo & Associates Corp.
201 N. Franklin Street
Suite 400
Tampa, FL 33602
Alfredo Jose Layrisse, PE No. 75610

DRAWN BY:	CHECKED BY:	DESIGNED BY:	CHECKED BY:
ARF 02-20	AJL 02-20	SKB 09-19	PDM 02-20

LEE COUNTY PUBLIC WORKS
DEPARTMENT OF TRANSPORTATION

ROAD NO.	COUNTY	COUNTY PROJECT No
CR 865	LEE	CN160002

SHEET TITLE: FRAMING PLAN (2 OF 4)

REF. DWG. NO.:

PROJECT NAME: ESTERO BLVD. (CR 865) OVER BIG CARLOS PASS

SHEET NO.: B1-83

jhanna 2/24/2022 3:19:05 PM c:\pwworkingdir\kca-pw.bentley.com_kca-pw-01\josh hanna\dms00783\B1FramingPlan02.dgn

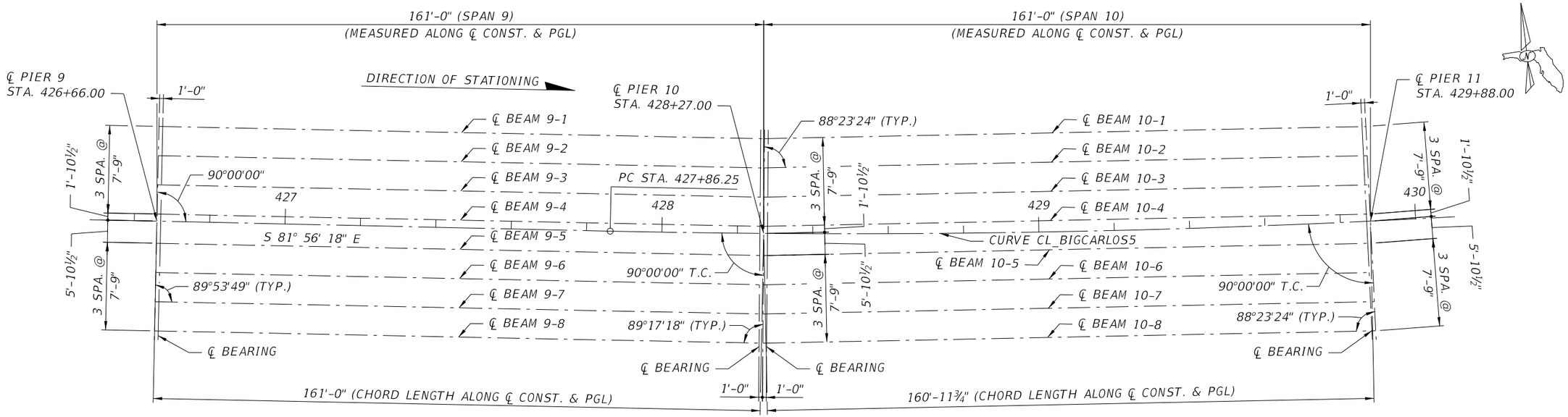

PARTIAL PLAN

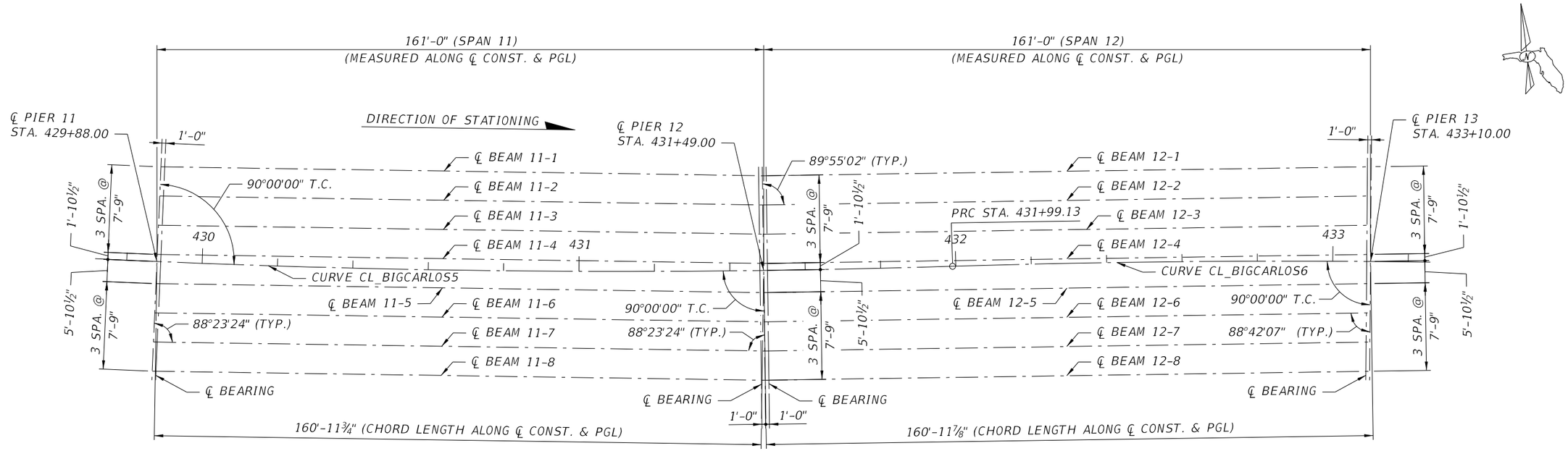

PARTIAL PLAN

NOTE:

TEMPORARY BRACING LOCATIONS ARE NOT SHOWN. FOR LOCATIONS OF TEMPORARY BRACING SEE SHEET B1-105 "TABLE OF PRESTRESSED I-BEAM TEMPORARY BRACING MINIMUM REQUIREMENTS AND LOADS".

BRIDGE NO. 124143

NOTICE: THE OFFICIAL RECORD OF THIS SHEET IS THE ELECTRONIC FILE DIGITALLY SIGNED AND SEALED UNDER RULE 61G15-23.004, F.A.C.

REVISIONS					
DATE	BY	DESCRIPTION	DATE	BY	DESCRIPTION

Kisinger Campo & Associates Corp.
201 N. Franklin Street
Suite 400
Tampa, FL 33602
Alfredo Jose Layrisse, PE No. 75610

DRAWN BY:	CHECKED BY:	DESIGNED BY:	CHECKED BY:
ARF 02-20	AJL 02-20	SKB 09-19	PDM 02-20

LEE COUNTY PUBLIC WORKS
DEPARTMENT OF TRANSPORTATION

ROAD NO.	COUNTY	COUNTY PROJECT No
CR 865	LEE	CN160002

SHEET TITLE: FRAMING PLAN (3 OF 4)

REF. DWG. NO.:

PROJECT NAME: ESTERO BLVD. (CR 865) OVER BIG CARLOS PASS

SHEET NO.: B1-84

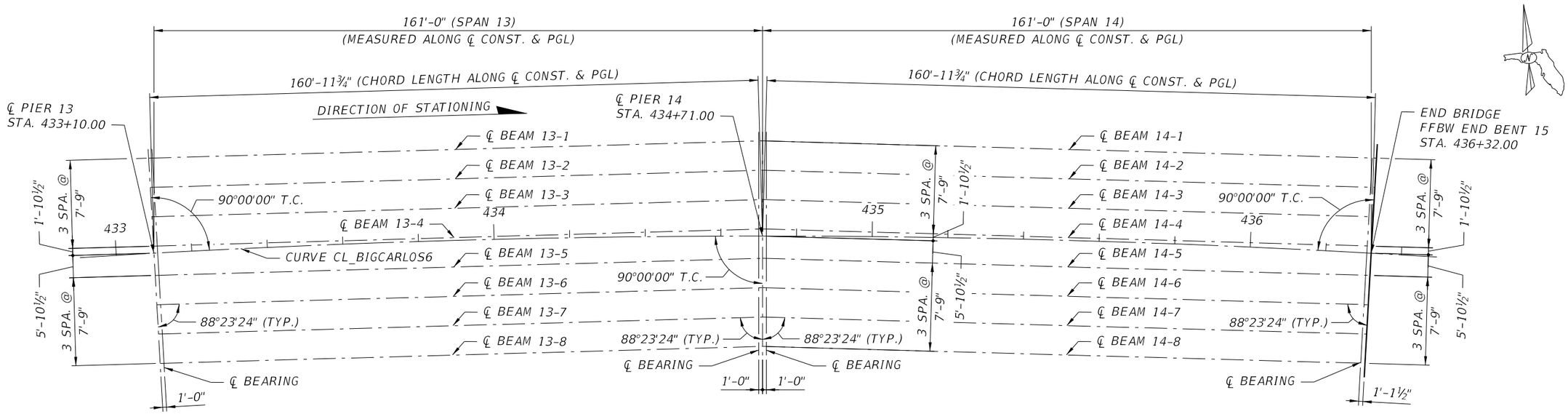

PARTIAL PLAN
(DIAPHRAGMS NOT SHOWN FOR CLARITY)

NOTES:

1. TEMPORARY BRACING LOCATIONS ARE NOT SHOWN. FOR LOCATIONS OF TEMPORARY BRACING SEE SHEET B1-105 "TABLE OF PRESTRESSED I-BEAM TEMPORARY BRACING MINIMUM REQUIREMENTS AND LOADS".
2. FOR DIAPHRAGM LOCATIONS SEE SHEET B1-112.

BRIDGE NO. 124143

REVISIONS					
DATE	BY	DESCRIPTION	DATE	BY	DESCRIPTION

Kisinger Campo & Associates Corp.
201 N. Franklin Street
Suite 400
Tampa, FL 33602
Alfredo Jose Layrisse, PE No. 75610

DRAWN BY:	ARF 02-20
CHECKED BY:	AJL 02-20
DESIGNED BY:	SKB 09-19
CHECKED BY:	PDM 02-20

LEE COUNTY PUBLIC WORKS
DEPARTMENT OF TRANSPORTATION

ROAD NO.	COUNTY	COUNTY PROJECT No
CR 865	LEE	CN160002

SHEET TITLE: FRAMING PLAN (4 OF 4)

REF. DWG. NO.:

PROJECT NAME: ESTERO BLVD. (CR 865) OVER BIG CARLOS PASS

SHEET NO.: B1-85

NOTICE: THE OFFICIAL RECORD OF THIS SHEET IS THE ELECTRONIC FILE DIGITALLY SIGNED AND SEALED UNDER RULE 61G15-23.004, F.A.C.

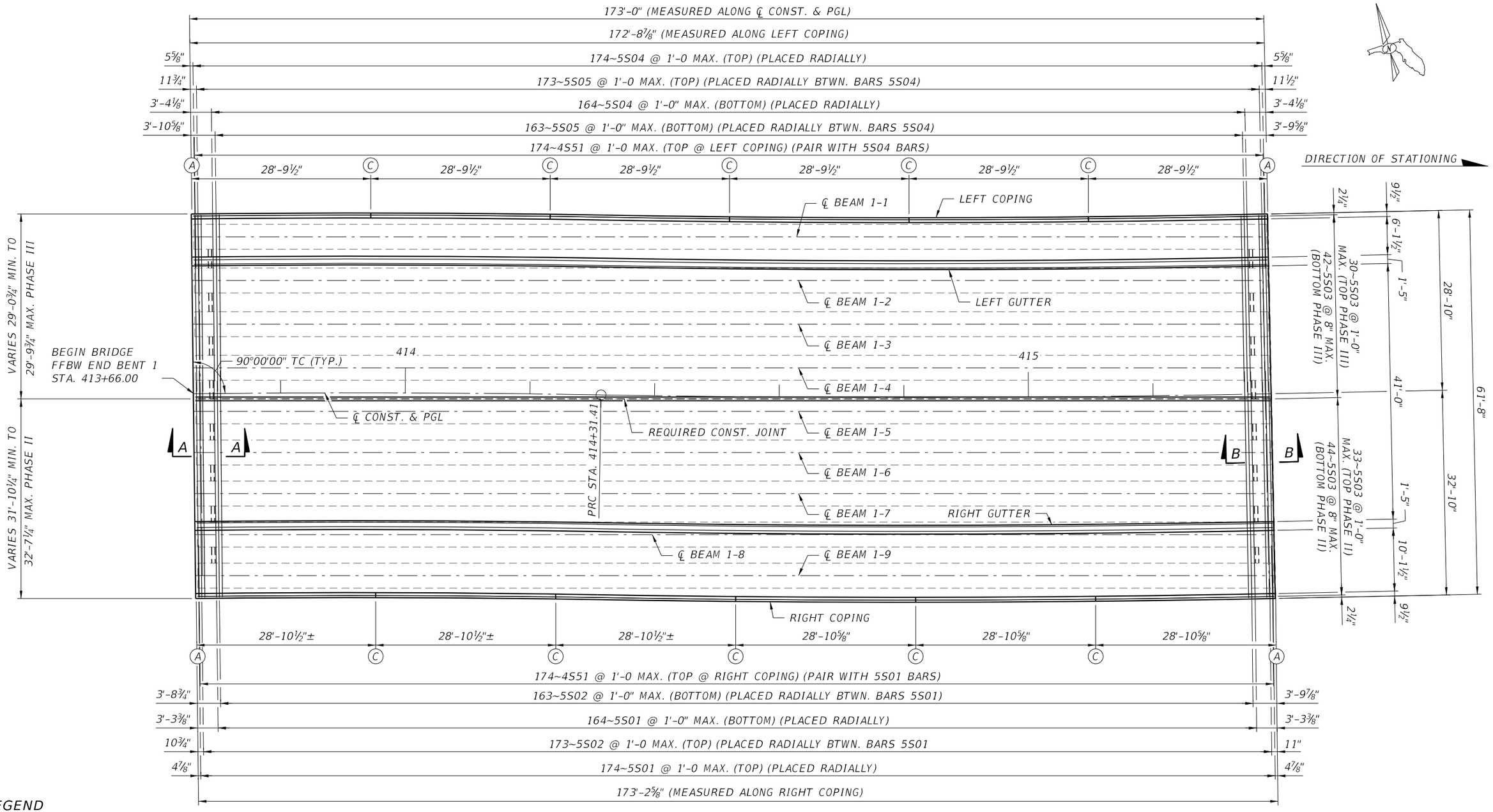

LEGEND

Ⓐ DECK JOINTS, SEE SHEET B1-103 FOR DETAILS.

Ⓑ ℄ ¾" OPEN JOINT

Ⓒ ℄ ½" V-GROOVE IN BOTH FACES AND TOP OF CONCRETE CURB, SEE INDEX 515-051.

PLAN
SPAN 1

NOTES:

1. SEE SHEET B1-100 FOR SUPERSTRUCTURE SECTION.
2. ALL REQUIRED REBAR LAPS SHALL BE A MINIMUM OF 1'-8" FOR NO. 5 BARS.
3. STAGGER LAP SPLICES BETWEEN ADJACENT LONGITUDINAL BARS.
4. FIELD ADJUST LONGITUDINAL BARS AS NECESSARY TO MEET SPACING REQUIREMENTS ALONG THE CURVE.

BRIDGE NO. 124143

REVISIONS					
DATE	BY	DESCRIPTION	DATE	BY	DESCRIPTION

Kisinger Campo & Associates Corp.
201 N. Franklin Street
Suite 400
Tampa, FL 33602
Alfredo Jose Layrisse, PE No. 75610

DRAWN BY:	CHECKED BY:	DESIGNED BY:	CHECKED BY:
JBH 04-21	KL 04-21	DAA 04-21	SKB 12-19

LEE COUNTY PUBLIC WORKS
DEPARTMENT OF TRANSPORTATION

ROAD NO.	COUNTY	COUNTY PROJECT No
CR 865	LEE	CN160002

SHEET TITLE: SUPERSTRUCTURE PLAN - SPAN 1

REF. DWG. NO.

PROJECT NAME: ESTERO BLVD. (CR 865) OVER BIG CARLOS PASS

SHEET NO. B1-86

NOTICE: THE OFFICIAL RECORD OF THIS SHEET IS THE ELECTRONIC FILE DIGITALLY SIGNED AND SEALED UNDER RULE 61G15-23.004, F.A.C.

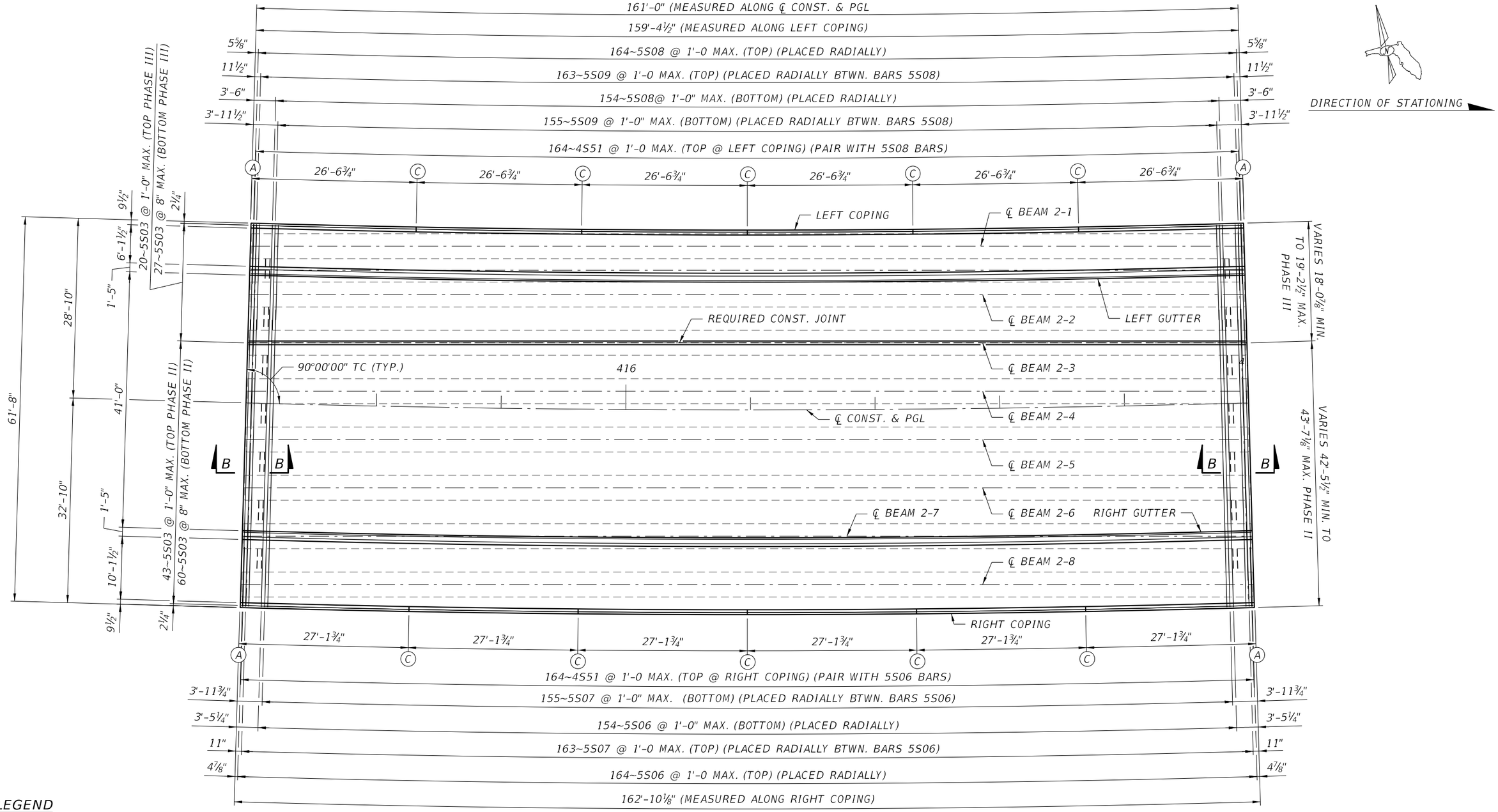

LEGEND

Ⓐ DECK JOINTS, SEE SHEET B1-103 FOR DETAILS.

Ⓑ ℄ ¾" OPEN JOINT

Ⓒ ℄ ½" V-GROOVE IN BOTH FACES AND TOP OF CONCRETE CURB, SEE INDEX 515-051.

PLAN
SPAN 2

NOTES:

1. SEE SHEET B1-101 FOR SUPERSTRUCTURE SECTION.
2. ALL REQUIRED REBAR LAPS SHALL BE A MINIMUM OF 1'-8" FOR NO. 5 BARS.
3. STAGGER LAP SPLICES BETWEEN ADJACENT LONGITUDINAL BARS.
4. FIELD ADJUST LONGITUDINAL BARS AS NECESSARY TO MEET SPACING REQUIREMENTS ALONG THE CURVE.

BRIDGE NO. 124143

REVISIONS					
DATE	BY	DESCRIPTION	DATE	BY	DESCRIPTION

Kisinger Campo & Associates Corp.
201 N. Franklin Street
Suite 400
Tampa, FL 33602
Alfredo Jose Layrisse, PE No. 75610

DRAWN BY:	CHECKED BY:	DESIGNED BY:	CHECKED BY:
JBH 04-21	KL 04-21	DAA 04-21	SKB 12-19

LEE COUNTY PUBLIC WORKS
DEPARTMENT OF TRANSPORTATION

ROAD NO.	COUNTY	COUNTY PROJECT No
CR 865	LEE	CN160002

SHEET TITLE: SUPERSTRUCTURE PLAN - SPAN 2

REF. DWG. NO.:

PROJECT NAME: ESTERO BLVD. (CR 865) OVER BIG CARLOS PASS

SHEET NO.: B1-87

NOTICE: THE OFFICIAL RECORD OF THIS SHEET IS THE ELECTRONIC FILE DIGITALLY SIGNED AND SEALED UNDER RULE 61G15-23.004, F.A.C.

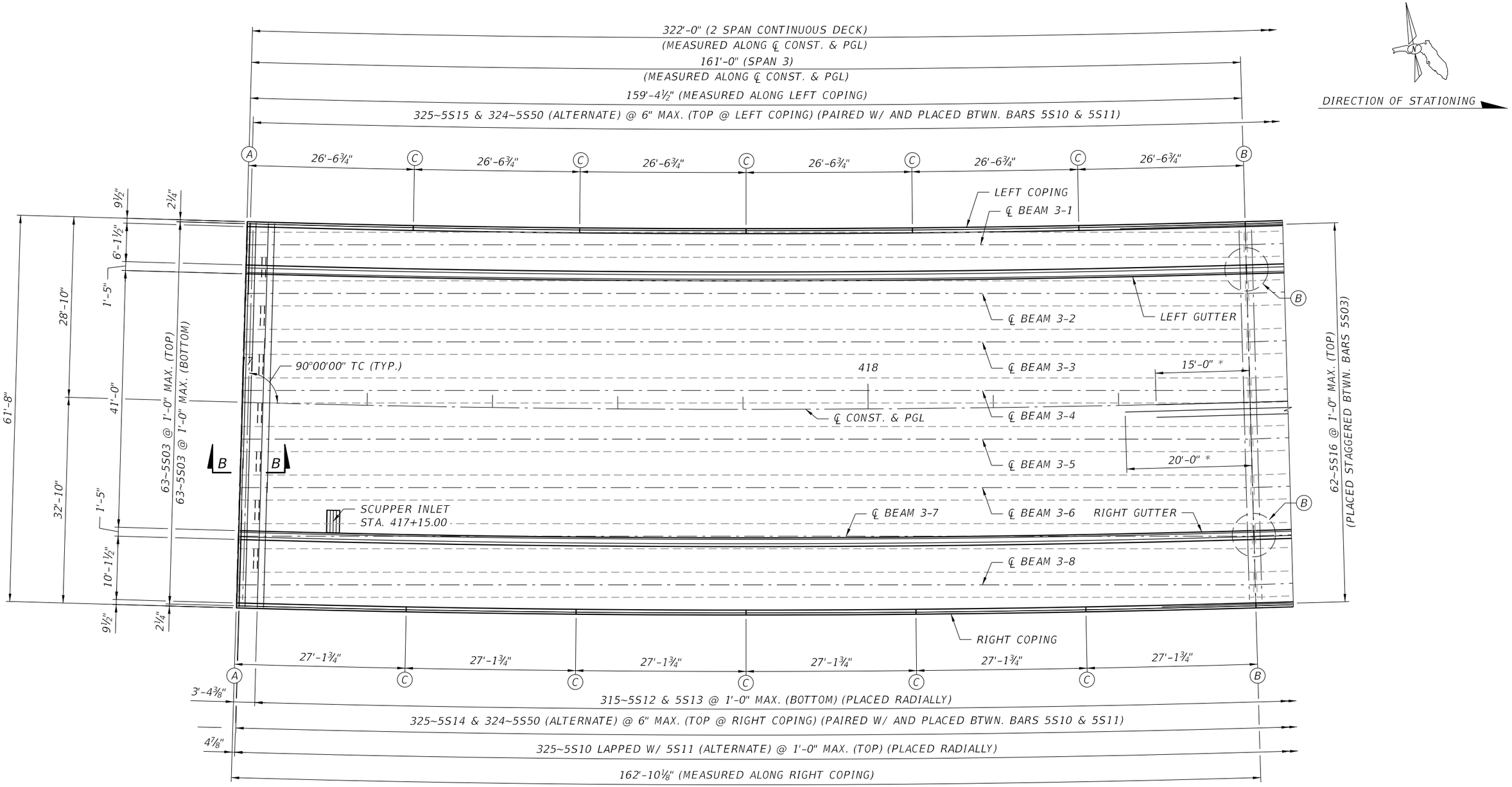

LEGEND

(A) DECK JOINTS, SEE SHEET B1-103 FOR DETAILS.

(B) ℄ ¾" OPEN JOINT

(C) ℄ ½" V-GROOVE IN BOTH FACES AND TOP OF CONCRETE CURB, SEE INDEX 515-051.

PLAN
SPAN 3

* STAGGER EVERY OTHER 5S16 BAR 5'-0" ABOUT ℄ OF PIER.

NOTES:

1. SEE SHEET B1-102 FOR SUPERSTRUCTURE SECTION.
2. ALL REQUIRED REBAR LAPS SHALL BE A MINIMUM OF 1'-8" FOR NO. 5 BARS.
3. STAGGER LAP SPLICES BETWEEN ADJACENT LONGITUDINAL BARS.
4. FIELD ADJUST LONGITUDINAL BARS AS NECESSARY TO MEET SPACING REQUIREMENTS ALONG THE CURVE.

BRIDGE NO. 124143

REVISIONS					
DATE	BY	DESCRIPTION	DATE	BY	DESCRIPTION

Kisinger Campo & Associates Corp.
201 N. Franklin Street
Suite 400
Tampa, FL 33602
Alfredo Jose Layrisse, PE No. 75610

DRAWN BY:	CHECKED BY:	DESIGNED BY:	CHECKED BY:
ARF 03-20	KL 04-21	DAA 02-20	SKB 03-20

LEE COUNTY PUBLIC WORKS
DEPARTMENT OF TRANSPORTATION

ROAD NO.	COUNTY	COUNTY PROJECT No
CR 865	LEE	CN160002

SHEET TITLE: SUPERSTRUCTURE PLAN - SPAN 3

REF. DWG. NO.

PROJECT NAME: ESTERO BLVD. (CR 865) OVER BIG CARLOS PASS

SHEET NO. B1-88

NOTICE: THE OFFICIAL RECORD OF THIS SHEET IS THE ELECTRONIC FILE DIGITALLY SIGNED AND SEALED UNDER RULE 61G15-23.004, F.A.C.

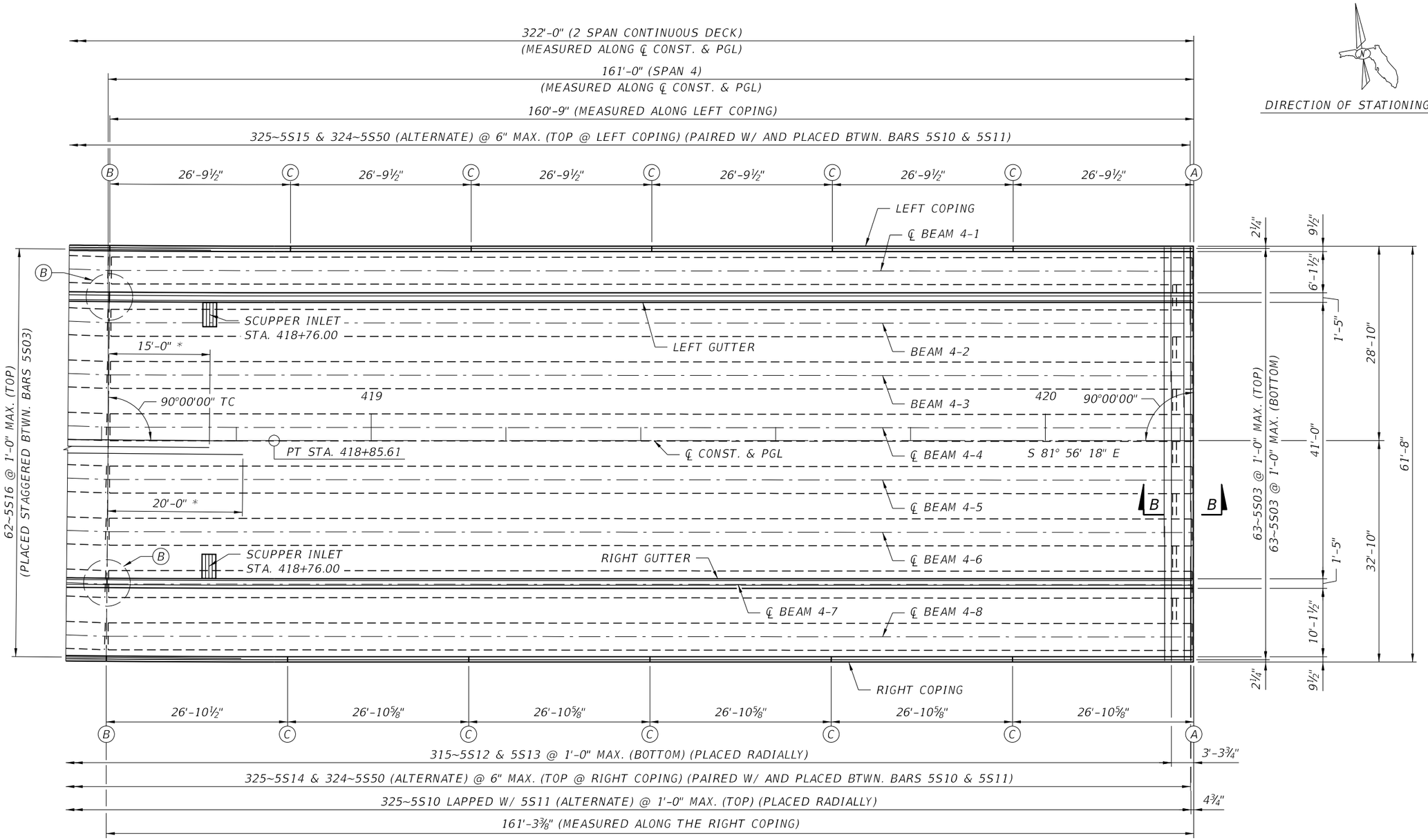

LEGEND

(A) DECK JOINTS, SEE SHEET B1-103 FOR DETAILS.

(B) ℄ ¾" OPEN JOINT

(C) ℄ ½" V-GROOVE IN BOTH FACES AND TOP OF CONCRETE CURB, SEE INDEX 515-051.

PLAN
SPAN 4

* STAGGER EVERY OTHER 5S16 BAR 5'-0" ABOUT ℄ OF PIER.

NOTES:

1. SEE SHEET B1-102 FOR SUPERSTRUCTURE SECTION.
2. ALL REQUIRED REBAR LAPS SHALL BE A MINIMUM OF 1'-8" FOR NO. 5 BARS.
3. STAGGER LAP SPLICES BETWEEN ADJACENT LONGITUDINAL BARS.
4. FIELD ADJUST LONGITUDINAL BARS AS NECESSARY TO MEET SPACING REQUIREMENTS ALONG THE CURVE.

BRIDGE NO. 124143

REVISIONS					
DATE	BY	DESCRIPTION	DATE	BY	DESCRIPTION

Kisinger Campo & Associates Corp.
201 N. Franklin Street
Suite 400
Tampa, FL 33602
Alfredo Jose Layrisse, PE No. 75610

DRAWN BY:	CHECKED BY:	DESIGNED BY:	CHECKED BY:
ARF 03-20	KL 04-21	DAA 02-20	SKB 03-20

LEE COUNTY PUBLIC WORKS
DEPARTMENT OF TRANSPORTATION

ROAD NO.	COUNTY	COUNTY PROJECT No
CR 865	LEE	CN160002

SHEET TITLE: SUPERSTRUCTURE PLAN - SPAN 4

REF. DWG. NO.:

PROJECT NAME: ESTERO BLVD. (CR 865) OVER BIG CARLOS PASS

SHEET NO.: B1-89

NOTICE: THE OFFICIAL RECORD OF THIS SHEET IS THE ELECTRONIC FILE DIGITALLY SIGNED AND SEALED UNDER RULE 61G15-23.004, F.A.C.

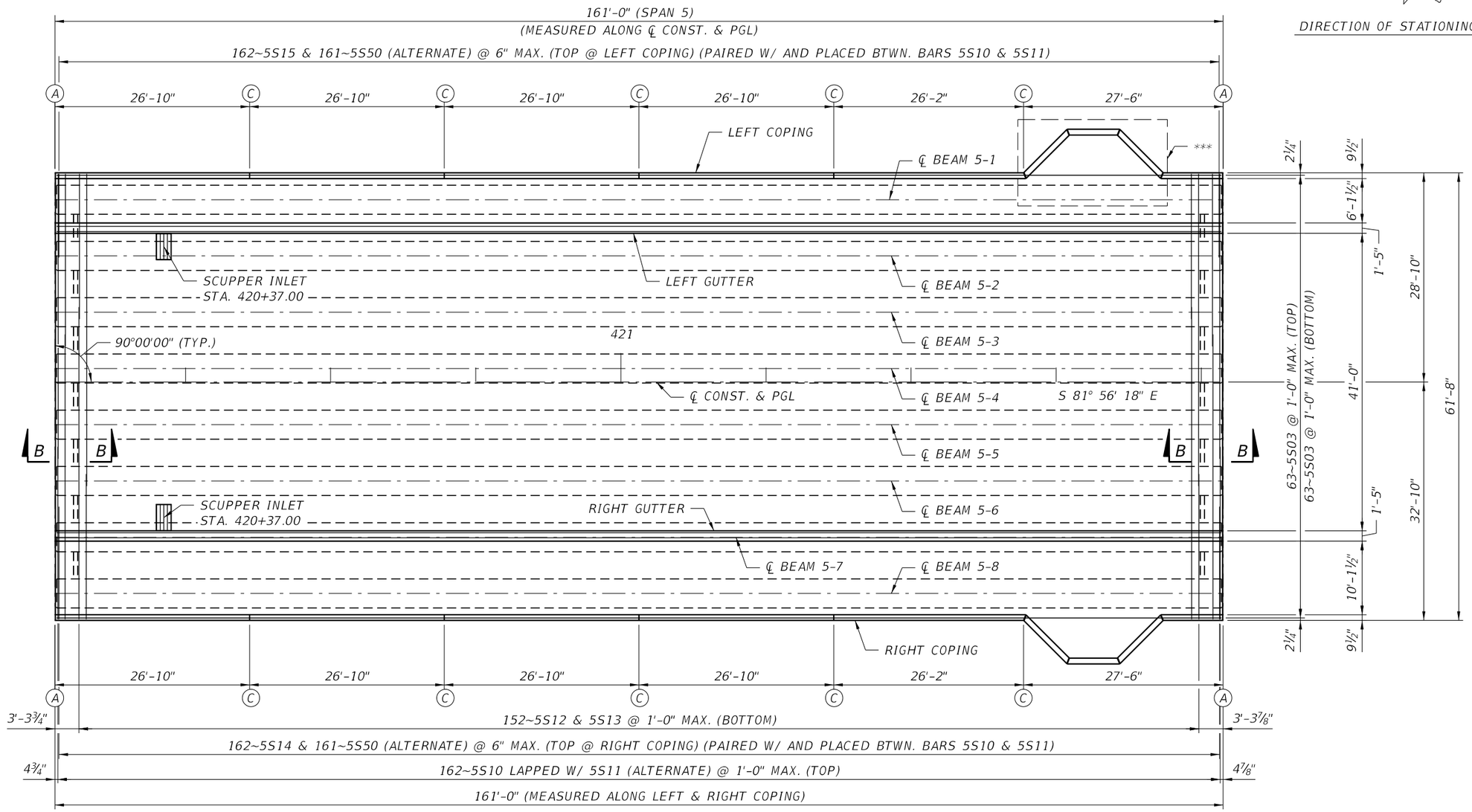

LEGEND

Ⓐ DECK JOINTS, SEE SHEET B1-103 FOR DETAILS.

Ⓑ ℄ ¾" OPEN JOINT

Ⓒ ℄ ½" V-GROOVE IN BOTH FACES AND TOP OF CONCRETE CURB, SEE INDEX 515-051.

*** FOR OVERLOOK DETAILS, SEE SHEET B1-110

PLAN
SPAN 5

NOTES:

1. SEE SHEET B1-102 FOR SUPERSTRUCTURE SECTION.
2. ALL REQUIRED REBAR LAPS SHALL BE A MINIMUM OF 1'-8" FOR NO. 5 BARS.
3. STAGGER LAP SPLICES BETWEEN ADJACENT LONGITUDINAL BARS.
4. FIELD ADJUST LONGITUDINAL BARS AS NECESSARY TO MEET SPACING REQUIREMENTS ALONG THE CURVE.

BRIDGE NO. 124143

REVISIONS					
DATE	BY	DESCRIPTION	DATE	BY	DESCRIPTION

Kisinger Campo & Associates Corp.
201 N. Franklin Street
Suite 400
Tampa, FL 33602
Alfredo Jose Layrisse, PE No. 75610

DRAWN BY:	ARF 03-20
CHECKED BY:	KL 04-21
DESIGNED BY:	DAA 02-20
CHECKED BY:	SKB 03-20

LEE COUNTY PUBLIC WORKS
DEPARTMENT OF TRANSPORTATION

ROAD NO.	COUNTY	COUNTY PROJECT No
CR 865	LEE	CN160002

SHEET TITLE: SUPERSTRUCTURE PLAN - SPAN 5

REF. DWG. NO.:

PROJECT NAME: ESTERO BLVD. (CR 865) OVER BIG CARLOS PASS

SHEET NO.: B1-90

NOTICE: THE OFFICIAL RECORD OF THIS SHEET IS THE ELECTRONIC FILE DIGITALLY SIGNED AND SEALED UNDER RULE 61G15-23.004, F.A.C.

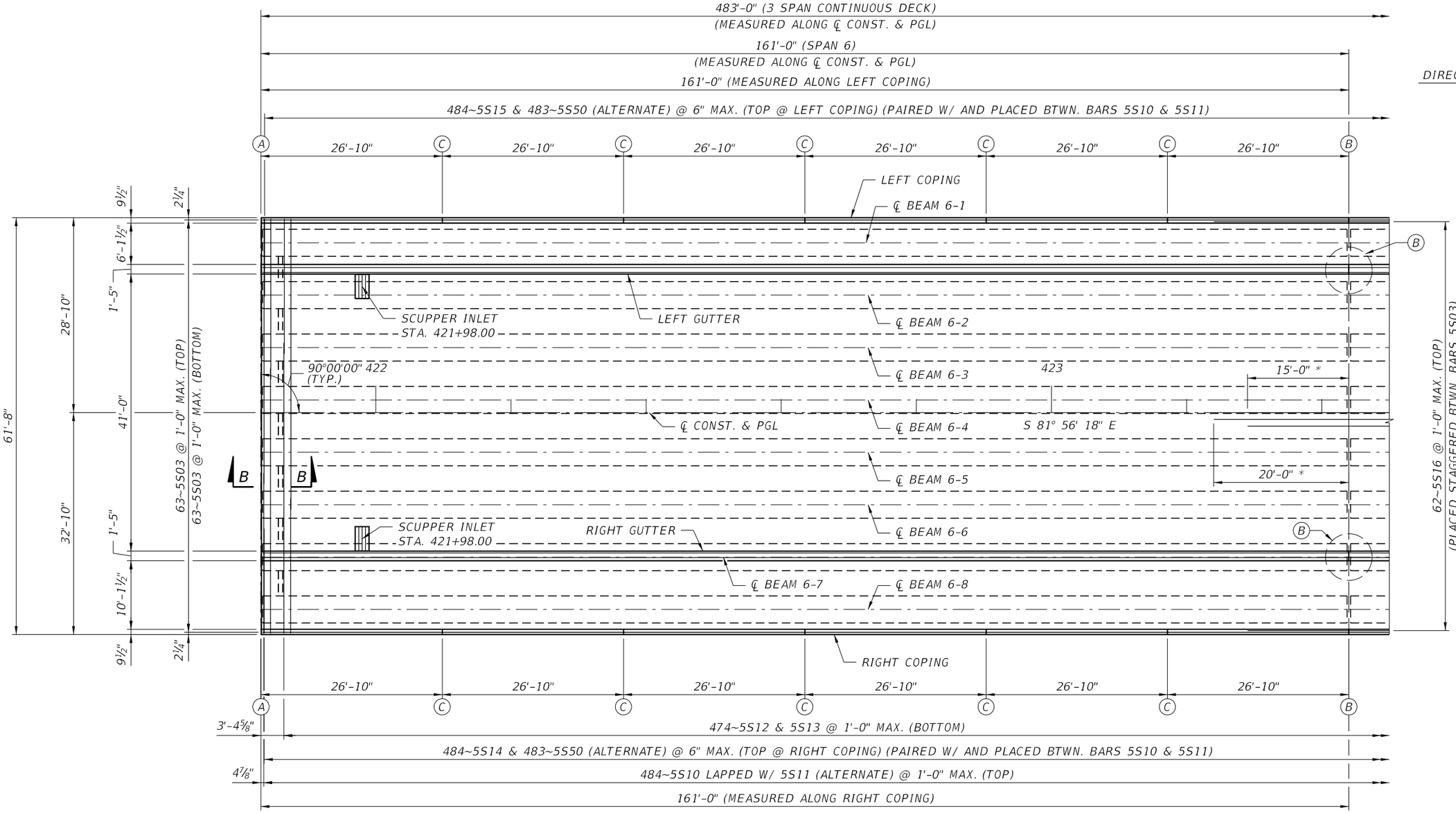

LEGEND

Ⓐ DECK JOINTS, SEE SHEET B1-103 FOR DETAILS.

Ⓑ ℄ ¾" OPEN JOINT

Ⓒ ℄ ½" V-GROOVE IN BOTH FACES AND TOP OF CONCRETE CURB, SEE INDEX 515-051.

PLAN
SPAN 6

* STAGGER EVERY OTHER 5S16 BAR 5'-0" ABOUT ℄ OF PIER.

NOTES:

1. SEE SHEET B1-102 FOR SUPERSTRUCTURE SECTION.
2. ALL REQUIRED REBAR LAPS SHALL BE A MINIMUM OF 1'-8" FOR NO. 5 BARS.
3. STAGGER LAP SPLICES BETWEEN ADJACENT LONGITUDINAL BARS.
4. FIELD ADJUST LONGITUDINAL BARS AS NECESSARY TO MEET SPACING REQUIREMENTS ALONG THE CURVE.

BRIDGE NO. 124143

REVISIONS					
DATE	BY	DESCRIPTION	DATE	BY	DESCRIPTION

Kisinger Campo & Associates Corp.
201 N. Franklin Street
Suite 400
Tampa, FL 33602
Alfredo Jose Layrisse, PE No. 75610

DRAWN BY:	ARF 03-20
CHECKED BY:	KL 04-21
DESIGNED BY:	DAA 02-20
CHECKED BY:	SKB 03-20

LEE COUNTY PUBLIC WORKS
DEPARTMENT OF TRANSPORTATION

ROAD NO.	COUNTY	COUNTY PROJECT No
CR 865	LEE	CN160002

SHEET TITLE: SUPERSTRUCTURE PLAN - SPAN 6

REF. DWG. NO.:

PROJECT NAME: ESTERO BLVD. (CR 865) OVER BIG CARLOS PASS

SHEET NO.: B1-91

NOTICE: THE OFFICIAL RECORD OF THIS SHEET IS THE ELECTRONIC FILE DIGITALLY SIGNED AND SEALED UNDER RULE 61G15-23.004, F.A.C.

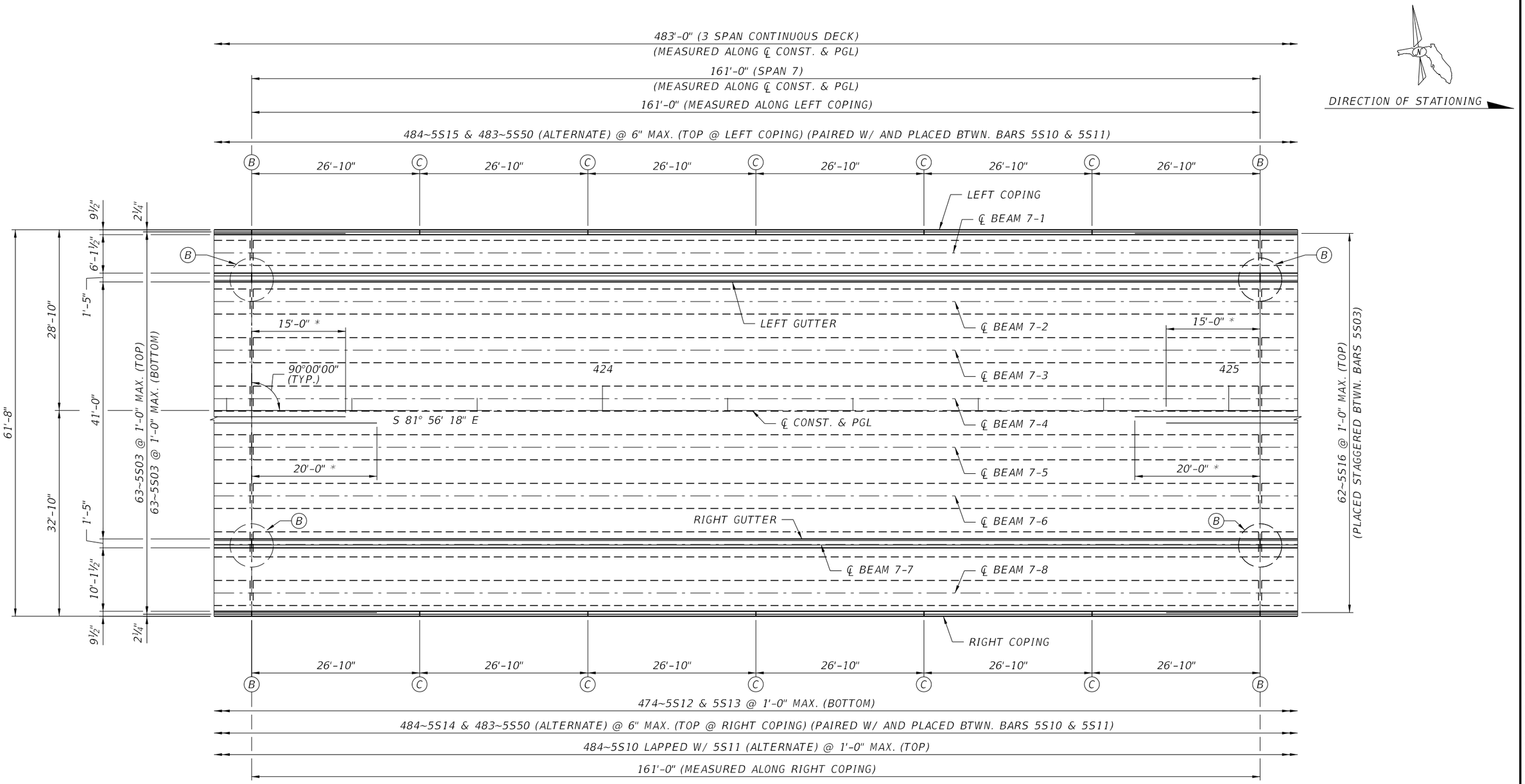

LEGEND

(A) DECK JOINTS, SEE SHEET B1-103 FOR DETAILS.

(B) ℄ ¾" OPEN JOINT

(C) ℄ ½" V-GROOVE IN BOTH FACES AND TOP OF CONCRETE CURB, SEE INDEX 515-051.

PLAN
SPAN 7

* STAGGER EVERY OTHER 5S16 BAR 5'-0" ABOUT ℄ OF PIER.

NOTES:

1. SEE SHEET B1-102 FOR SUPERSTRUCTURE SECTION.
2. ALL REQUIRED REBAR LAPS SHALL BE A MINIMUM OF 1'-8" FOR NO. 5 BARS.
3. STAGGER LAP SPLICES BETWEEN ADJACENT LONGITUDINAL BARS.
4. FIELD ADJUST LONGITUDINAL BARS AS NECESSARY TO MEET SPACING REQUIREMENTS ALONG THE CURVE.

BRIDGE NO. 124143

REVISIONS					
DATE	BY	DESCRIPTION	DATE	BY	DESCRIPTION

Kisinger Campo & Associates Corp.
201 N. Franklin Street
Suite 400
Tampa, FL 33602
Alfredo Jose Layrisse, PE No. 75610

DRAWN BY:	CHECKED BY:	DESIGNED BY:	CHECKED BY:
ARF 03-20	KL 04-21	DAA 02-20	SKB 03-20

LEE COUNTY PUBLIC WORKS
DEPARTMENT OF TRANSPORTATION

ROAD NO.	COUNTY	COUNTY PROJECT No
CR 865	LEE	CN160002

SHEET TITLE: SUPERSTRUCTURE PLAN - SPAN 7

REF. DWG. NO.:

PROJECT NAME: ESTERO BLVD. (CR 865) OVER BIG CARLOS PASS

SHEET NO.: B1-92

NOTICE: THE OFFICIAL RECORD OF THIS SHEET IS THE ELECTRONIC FILE DIGITALLY SIGNED AND SEALED UNDER RULE 61G15-23.004, F.A.C.

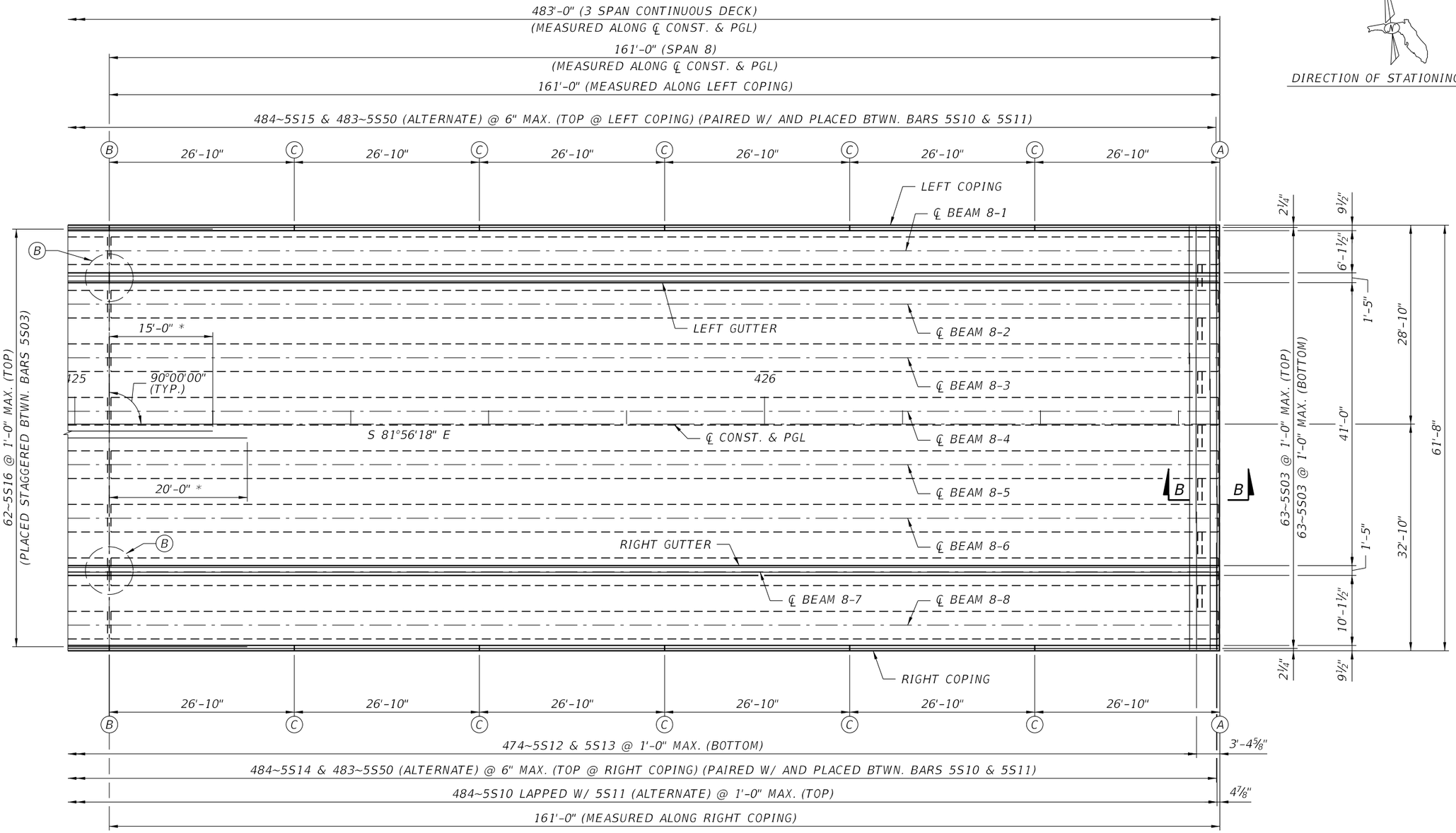

LEGEND

Ⓐ DECK JOINTS, SEE SHEET B1-103 FOR DETAILS.

Ⓑ ℄ ¾" OPEN JOINT

Ⓒ ℄ ½" V-GROOVE IN BOTH FACES AND TOP OF CONCRETE CURB, SEE INDEX 515-051.

PLAN
SPAN 8

* STAGGER EVERY OTHER 5S16 BAR 5'-0" ABOUT ℄ OF PIER.

NOTES:

1. SEE SHEET B1-102 FOR SUPERSTRUCTURE SECTION.
2. ALL REQUIRED REBAR LAPS SHALL BE A MINIMUM OF 1'-8" FOR NO. 5 BARS.
3. STAGGER LAP SPLICES BETWEEN ADJACENT LONGITUDINAL BARS.
4. FIELD ADJUST LONGITUDINAL BARS AS NECESSARY TO MEET SPACING REQUIREMENTS ALONG THE CURVE.

BRIDGE NO. 124143

REVISIONS					
DATE	BY	DESCRIPTION	DATE	BY	DESCRIPTION

Kisinger Campo & Associates Corp.
201 N. Franklin Street
Suite 400
Tampa, FL 33602
Alfredo Jose Layrisse, PE No. 75610

DRAWN BY:	CHECKED BY:	DESIGNED BY:	CHECKED BY:
ARF 03-20	KL 04-21	DAA 02-20	SKB 03-20

LEE COUNTY PUBLIC WORKS
DEPARTMENT OF TRANSPORTATION

ROAD NO.	COUNTY	COUNTY PROJECT No
CR 865	LEE	CN160002

SHEET TITLE: SUPERSTRUCTURE PLAN - SPAN 8

REF. DWG. NO.:

PROJECT NAME: ESTERO BLVD. (CR 865) OVER BIG CARLOS PASS

SHEET NO.: B1-93

NOTICE: THE OFFICIAL RECORD OF THIS SHEET IS THE ELECTRONIC FILE DIGITALLY SIGNED AND SEALED UNDER RULE 61G15-23.004, F.A.C.

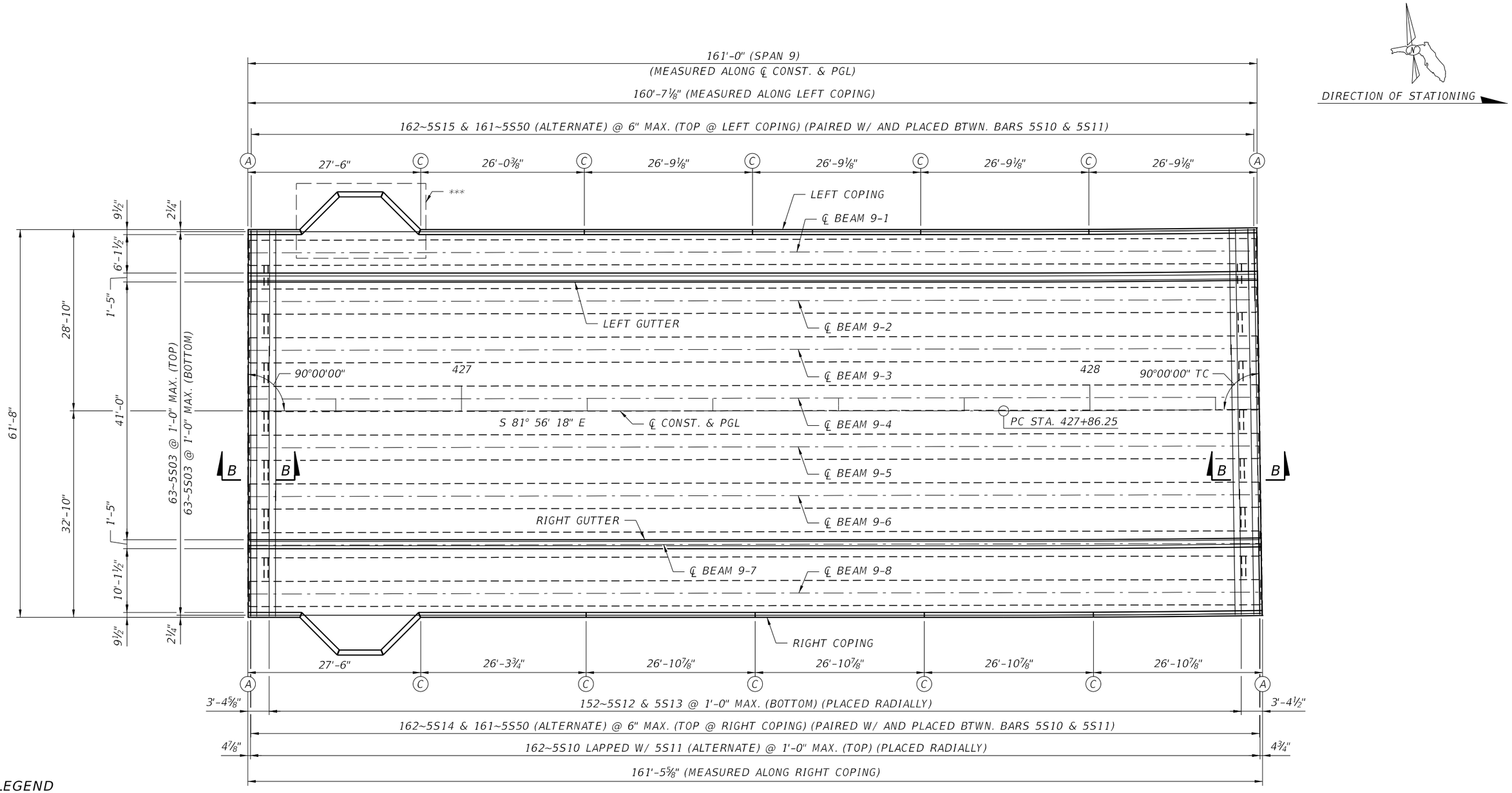

LEGEND

Ⓐ DECK JOINTS, SEE SHEET B1-103 FOR DETAILS.

Ⓑ ℄ ¾" OPEN JOINT

Ⓒ ℄ ½" V-GROOVE IN BOTH FACES AND TOP OF CONCRETE CURB, SEE INDEX 515-051.

*** FOR OVERLOOK DETAILS, SEE SHEET B1-110

PLAN
SPAN 9

NOTES:

1. SEE SHEET B1-102 FOR SUPERSTRUCTURE SECTION.
2. ALL REQUIRED REBAR LAPS SHALL BE A MINIMUM OF 1'-8" FOR NO. 5 BARS.
3. STAGGER LAP SPLICES BETWEEN ADJACENT LONGITUDINAL BARS.
4. FIELD ADJUST LONGITUDINAL BARS AS NECESSARY TO MEET SPACING REQUIREMENTS ALONG THE CURVE.

BRIDGE NO. 124143

REVISIONS					
DATE	BY	DESCRIPTION	DATE	BY	DESCRIPTION

Kisinger Campo & Associates Corp.
201 N. Franklin Street
Suite 400
Tampa, FL 33602
Alfredo Jose Layrisse, PE No. 75610

DRAWN BY:	CHECKED BY:	DESIGNED BY:	CHECKED BY:
ARF 03-20	KL 04-21	DAA 02-20	SKB 03-20

LEE COUNTY PUBLIC WORKS
DEPARTMENT OF TRANSPORTATION

ROAD NO.	COUNTY	COUNTY PROJECT No
CR 865	LEE	CN160002

SHEET TITLE: SUPERSTRUCTURE PLAN - SPAN 9

REF. DWG. NO.:

PROJECT NAME: ESTERO BLVD. (CR 865) OVER BIG CARLOS PASS

SHEET NO.: B1-94

NOTICE: THE OFFICIAL RECORD OF THIS SHEET IS THE ELECTRONIC FILE DIGITALLY SIGNED AND SEALED UNDER RULE 61G15-23.004, F.A.C.

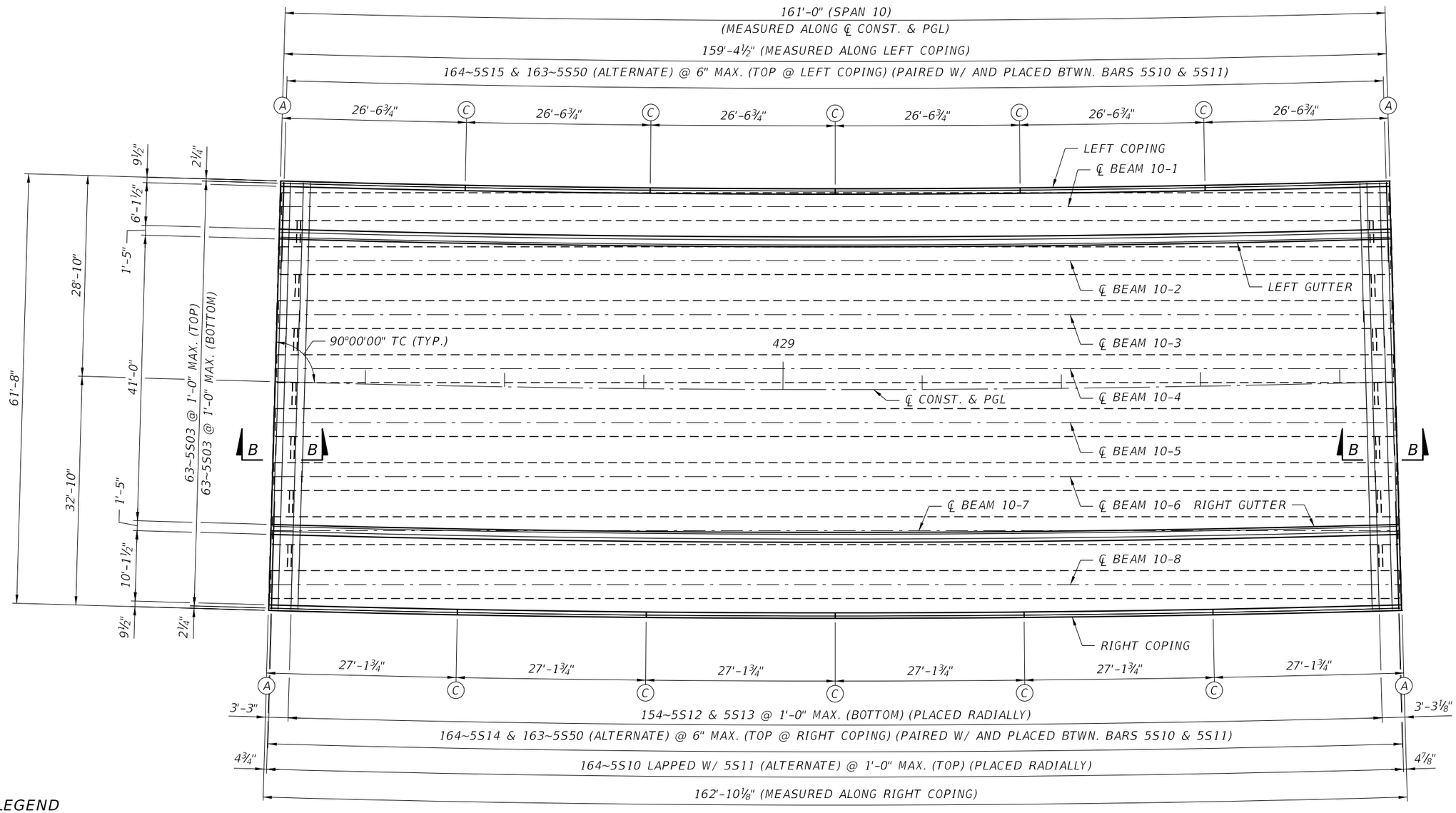

DIRECTION OF STATIONING

LEGEND

(A) DECK JOINTS, SEE SHEET B1-103 FOR DETAILS.

(B) ℄ ¾" OPEN JOINT

(C) ℄ ½" V-GROOVE IN BOTH FACES AND TOP OF CONCRETE CURB, SEE INDEX 515-051.

PLAN
SPAN 10

NOTES:

1. SEE SHEET B1-102 FOR SUPERSTRUCTURE SECTION.
2. ALL REQUIRED REBAR LAPS SHALL BE A MINIMUM OF 1'-8" FOR NO. 5 BARS.
3. STAGGER LAP SPLICES BETWEEN ADJACENT LONGITUDINAL BARS.
4. FIELD ADJUST LONGITUDINAL BARS AS NECESSARY TO MEET SPACING REQUIREMENTS ALONG THE CURVE.

BRIDGE NO. 124143

NOTICE: THE OFFICIAL RECORD OF THIS SHEET IS THE ELECTRONIC FILE DIGITALLY SIGNED AND SEALED UNDER RULE 61G15-23.004, F.A.C.

REVISIONS					
DATE	BY	DESCRIPTION	DATE	BY	DESCRIPTION

Kisinger Campo & Associates Corp.
201 N. Franklin Street
Suite 400
Tampa, FL 33602
Alfredo Jose Layrisse, PE No. 75610

DRAWN BY: ARF 03-20
CHECKED BY: KL 04-21
DESIGNED BY: DAA 02-20
CHECKED BY: SKB 03-20

LEE COUNTY PUBLIC WORKS
DEPARTMENT OF TRANSPORTATION

ROAD NO.	COUNTY	COUNTY PROJECT No
CR 865	LEE	CN160002

SHEET TITLE: SUPERSTRUCTURE PLAN - SPAN 10

REF. DWG. NO.:

PROJECT NAME: ESTERO BLVD. (CR 865) OVER BIG CARLOS PASS

SHEET NO.: B1-95

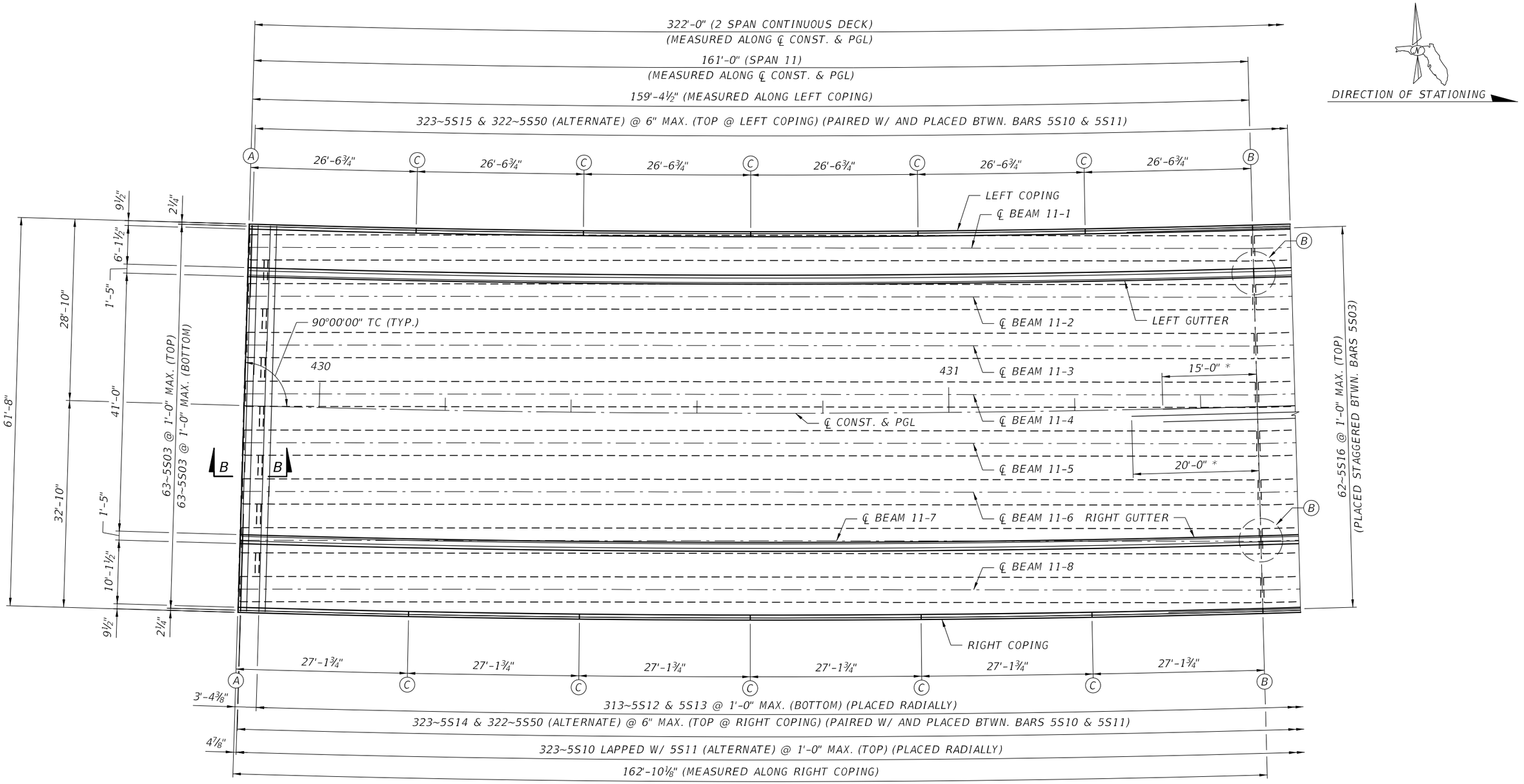

LEGEND

(A) DECK JOINTS, SEE SHEET B1-103 FOR DETAILS.

(B) ℄ ¾" OPEN JOINT

(C) ℄ ½" V-GROOVE IN BOTH FACES AND TOP OF CONCRETE CURB, SEE INDEX 515-051.

PLAN
SPAN 11

* STAGGER EVERY OTHER 5S16 BAR 5'-0" ABOUT ℄ OF PIER.

NOTES:

1. SEE SHEET B1-102 FOR SUPERSTRUCTURE SECTION.
2. ALL REQUIRED REBAR LAPS SHALL BE A MINIMUM OF 1'-8" FOR NO. 5 BARS.
3. STAGGER LAP SPLICES BETWEEN ADJACENT LONGITUDINAL BARS.
4. FIELD ADJUST LONGITUDINAL BARS AS NECESSARY TO MEET SPACING REQUIREMENTS ALONG THE CURVE.

BRIDGE NO. 124143

REVISIONS					
DATE	BY	DESCRIPTION	DATE	BY	DESCRIPTION

Kisinger Campo & Associates Corp.
201 N. Franklin Street
Suite 400
Tampa, FL 33602
Alfredo Jose Layrisse, PE No. 75610

DRAWN BY: ARF 03-20
CHECKED BY: KL 04-21
DESIGNED BY: DAA 02-20
CHECKED BY: SKB 03-20

LEE COUNTY PUBLIC WORKS
DEPARTMENT OF TRANSPORTATION

ROAD NO.	COUNTY	COUNTY PROJECT No
CR 865	LEE	CN160002

SHEET TITLE: SUPERSTRUCTURE PLAN - SPAN 11

REF. DWG. NO.:

PROJECT NAME: ESTERO BLVD. (CR 865) OVER BIG CARLOS PASS

SHEET NO.: B1-96

NOTICE: THE OFFICIAL RECORD OF THIS SHEET IS THE ELECTRONIC FILE DIGITALLY SIGNED AND SEALED UNDER RULE 61G15-23.004, F.A.C.

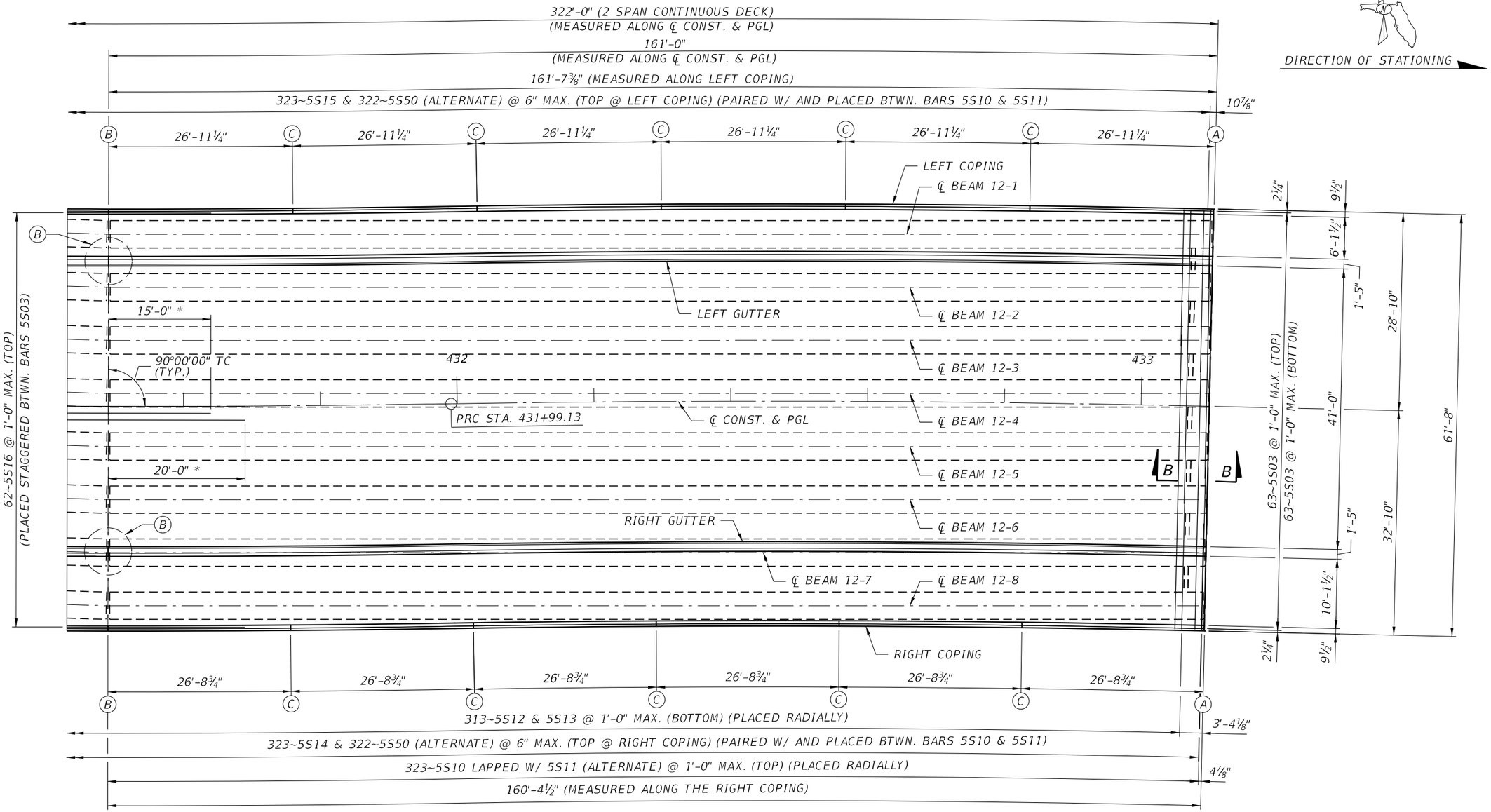

LEGEND

Ⓐ DECK JOINTS, SEE SHEET B1-103 FOR DETAILS.

Ⓑ ℄ ¾" OPEN JOINT

Ⓒ ℄ ½" V-GROOVE IN BOTH FACES AND TOP OF CONCRETE CURB, SEE INDEX 515-051.

PLAN
SPAN 12

* STAGGER EVERY OTHER 5S16 BAR 5'-0" ABOUT ℄ OF PIER.

NOTES:

1. SEE SHEET B1-102 FOR SUPERSTRUCTURE SECTION.
2. ALL REQUIRED REBAR LAPS SHALL BE A MINIMUM OF 1'-8" FOR NO. 5 BARS.
3. STAGGER LAP SPLICES BETWEEN ADJACENT LONGITUDINAL BARS.
4. FIELD ADJUST LONGITUDINAL BARS AS NECESSARY TO MEET SPACING REQUIREMENTS ALONG THE CURVE.

BRIDGE NO. 124143

REVISIONS					
DATE	BY	DESCRIPTION	DATE	BY	DESCRIPTION

Kisinger Campo & Associates Corp.
201 N. Franklin Street
Suite 400
Tampa, FL 33602
Alfredo Jose Layrisse, PE No. 75610

DRAWN BY:	CHECKED BY:	DESIGNED BY:	CHECKED BY:
ARF 03-20	KL 04-21	DAA 02-20	SKB 03-20

LEE COUNTY PUBLIC WORKS
DEPARTMENT OF TRANSPORTATION

ROAD NO.	COUNTY	COUNTY PROJECT No
CR 865	LEE	CN160002

SHEET TITLE: SUPERSTRUCTURE PLAN - SPAN 12

REF. DWG. NO.

PROJECT NAME: ESTERO BLVD. (CR 865) OVER BIG CARLOS PASS

SHEET NO. B1-97

NOTICE: THE OFFICIAL RECORD OF THIS SHEET IS THE ELECTRONIC FILE DIGITALLY SIGNED AND SEALED UNDER RULE 61G15-23.004, F.A.C.

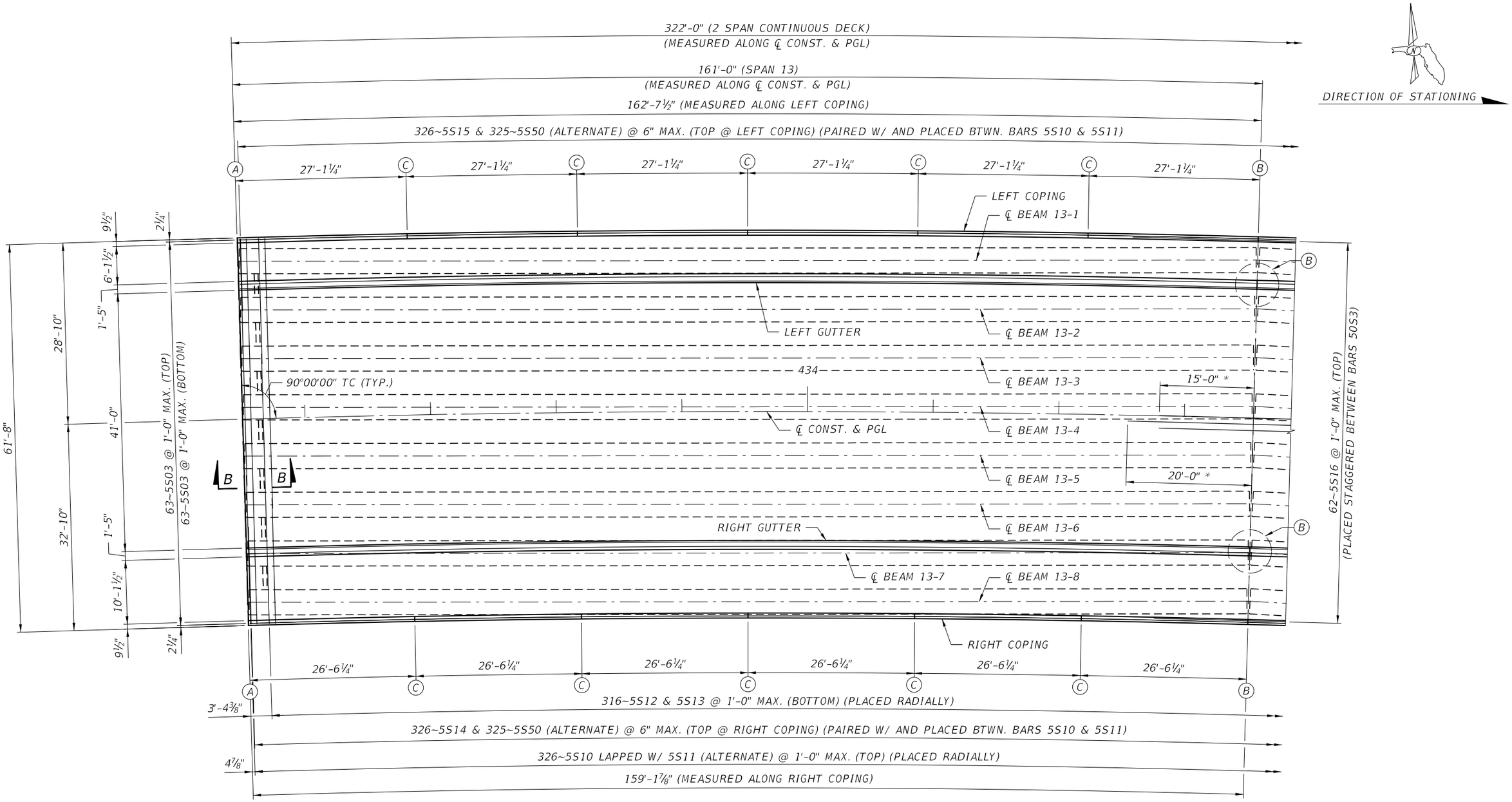

LEGEND

(A) DECK JOINTS, SEE SHEET B1-103 FOR DETAILS.

(B) ℄ ¾" OPEN JOINT

(C) ℄ ½" V-GROOVE IN BOTH FACES AND TOP OF CONCRETE CURB, SEE INDEX 515-051.

PLAN
SPAN 13

* STAGGER EVERY OTHER 5S16 BAR 5'-0" ABOUT ℄ OF PIER.

NOTES:

1. SEE SHEET B1-102 FOR SUPERSTRUCTURE SECTION.
2. ALL REQUIRED REBAR LAPS SHALL BE A MINIMUM OF 1'-8" FOR NO. 5 BARS.
3. STAGGER LAP SPLICES BETWEEN ADJACENT LONGITUDINAL BARS.
4. FIELD ADJUST LONGITUDINAL BARS AS NECESSARY TO MEET SPACING REQUIREMENTS ALONG THE CURVE.

BRIDGE NO. 124143

REVISIONS					
DATE	BY	DESCRIPTION	DATE	BY	DESCRIPTION

Kisinger Campo & Associates Corp.
201 N. Franklin Street
Suite 400
Tampa, FL 33602
Alfredo Jose Layrisse, PE No. 75610

DRAWN BY: ARF 03-20	
CHECKED BY: KL 04-21	
DESIGNED BY: DAA 02-20	
CHECKED BY: SKB 03-20	

LEE COUNTY PUBLIC WORKS
DEPARTMENT OF TRANSPORTATION

ROAD NO.	COUNTY	COUNTY PROJECT No
CR 865	LEE	CN160002

SHEET TITLE: SUPERSTRUCTURE PLAN - SPAN 13

REF. DWG. NO.

PROJECT NAME: ESTERO BLVD. (CR 865) OVER BIG CARLOS PASS

SHEET NO. B1-98

NOTICE: THE OFFICIAL RECORD OF THIS SHEET IS THE ELECTRONIC FILE DIGITALLY SIGNED AND SEALED UNDER RULE 61G15-23.004, F.A.C.

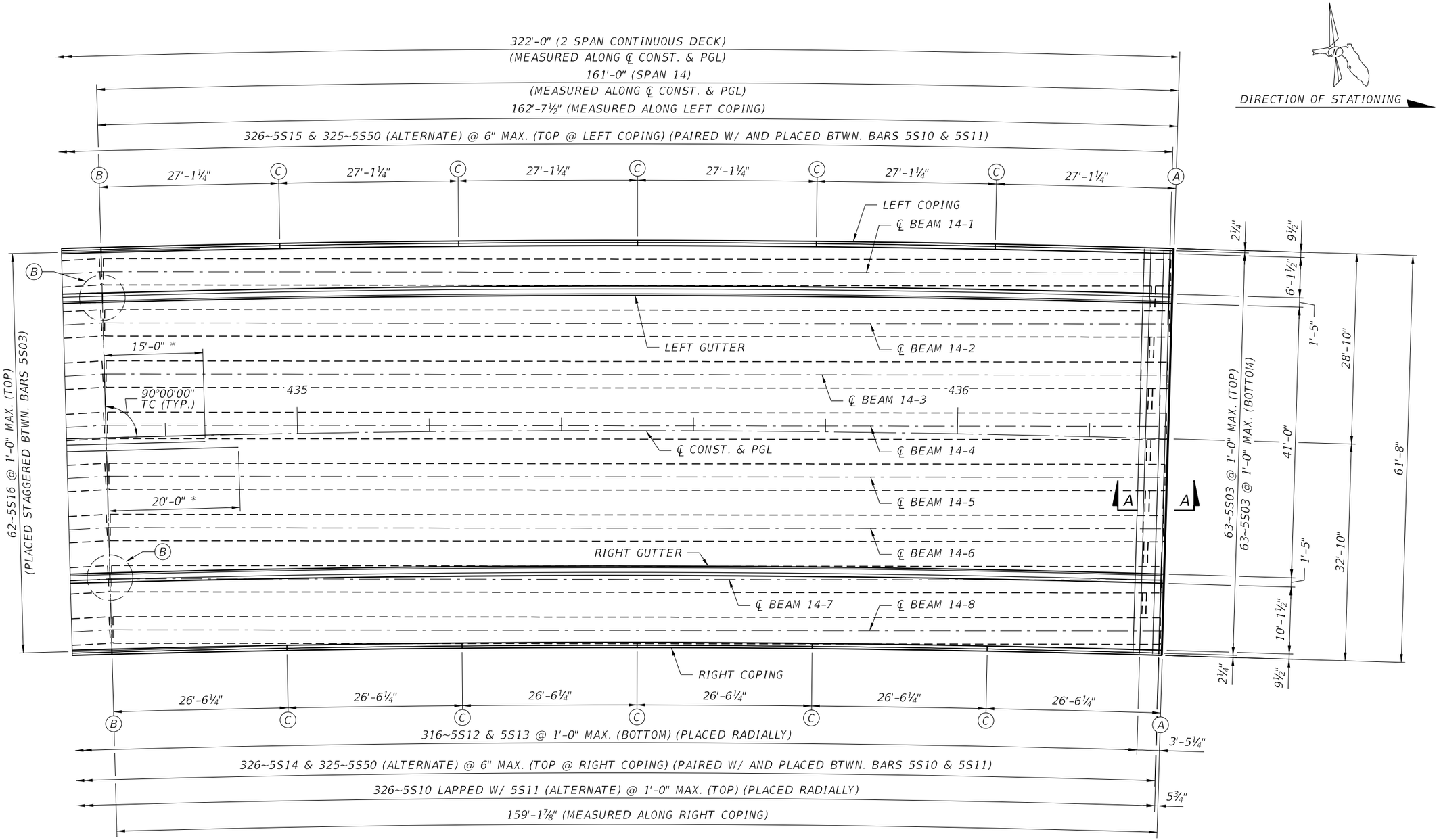

LEGEND

Ⓐ DECK JOINTS, SEE SHEET B1-103 FOR DETAILS.

Ⓑ ℄ ¾" OPEN JOINT

Ⓒ ℄ ½" V-GROOVE IN BOTH FACES AND TOP OF CONCRETE CURB, SEE INDEX 515-051.

PLAN
SPAN 14

* STAGGER EVERY OTHER 5S16 BAR 5'-0" ABOUT ℄ OF PIER.

NOTES:

1. SEE SHEET B1-102 FOR SUPERSTRUCTURE SECTION.
2. ALL REQUIRED REBAR LAPS SHALL BE A MINIMUM OF 1'-8" FOR NO. 5 BARS.
3. STAGGER LAP SPLICES BETWEEN ADJACENT LONGITUDINAL BARS.
4. FIELD ADJUST LONGITUDINAL BARS AS NECESSARY TO MEET SPACING REQUIREMENTS ALONG THE CURVE.

BRIDGE NO. 124143

REVISIONS					
DATE	BY	DESCRIPTION	DATE	BY	DESCRIPTION

Kisinger Campo & Associates Corp.
201 N. Franklin Street
Suite 400
Tampa, FL 33602
Alfredo Jose Layrisse, PE No. 75610

DRAWN BY: ARF 03-20
CHECKED BY: KL 04-21
DESIGNED BY: DAA 02-20
CHECKED BY: SKB 03-20

LEE COUNTY PUBLIC WORKS
DEPARTMENT OF TRANSPORTATION

ROAD NO.	COUNTY	COUNTY PROJECT No
CR 865	LEE	CN160002

SHEET TITLE: SUPERSTRUCTURE PLAN - SPAN 14

REF. DWG. NO.:

PROJECT NAME: ESTERO BLVD. (CR 865) OVER BIG CARLOS PASS

SHEET NO.: B1-99

NOTICE: THE OFFICIAL RECORD OF THIS SHEET IS THE ELECTRONIC FILE DIGITALLY SIGNED AND SEALED UNDER RULE 61G15-23.004, F.A.C.

NOTES:

1. STAGGER LAP SPLICES BETWEEN ADJACENT TRANSVERSE AND LONGITUDINAL BARS.
2. FIELD ADJUST LONGITUDINAL BARS AS NECESSARY TO MEET SPACING REQUIREMENTS ALONG CURVE.
3. ALL REQUIRED REBAR LAP SPLICES SHALL BE A MINIMUM OF 1'-8" FOR NO. 5 BARS.

* 42" BRIDGE PEDESTRIAN/BICYCLE RAILING (ALUMINUM), SCHEME 2, INDEX 515-061 (TYP.)

** SEE SHEETS B1-121 THRU B1-126 FOR 32" CORRAL BARRIER DETAILS.

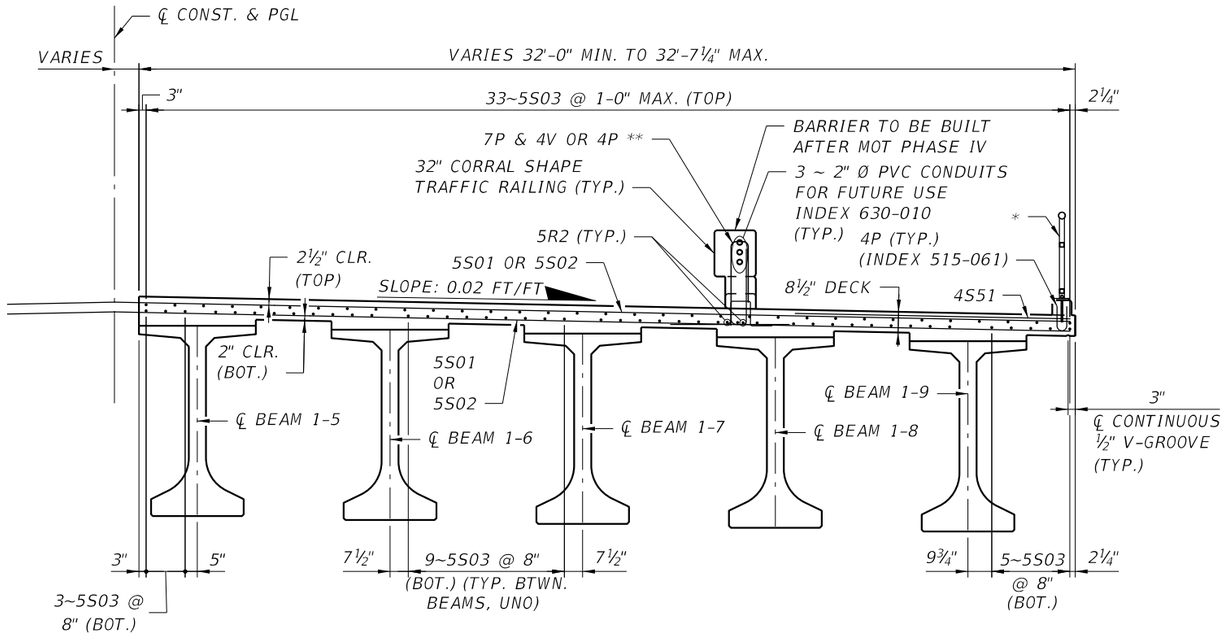

SUPERSTRUCTURE SECTION

(SPAN 1 - PHASE II)

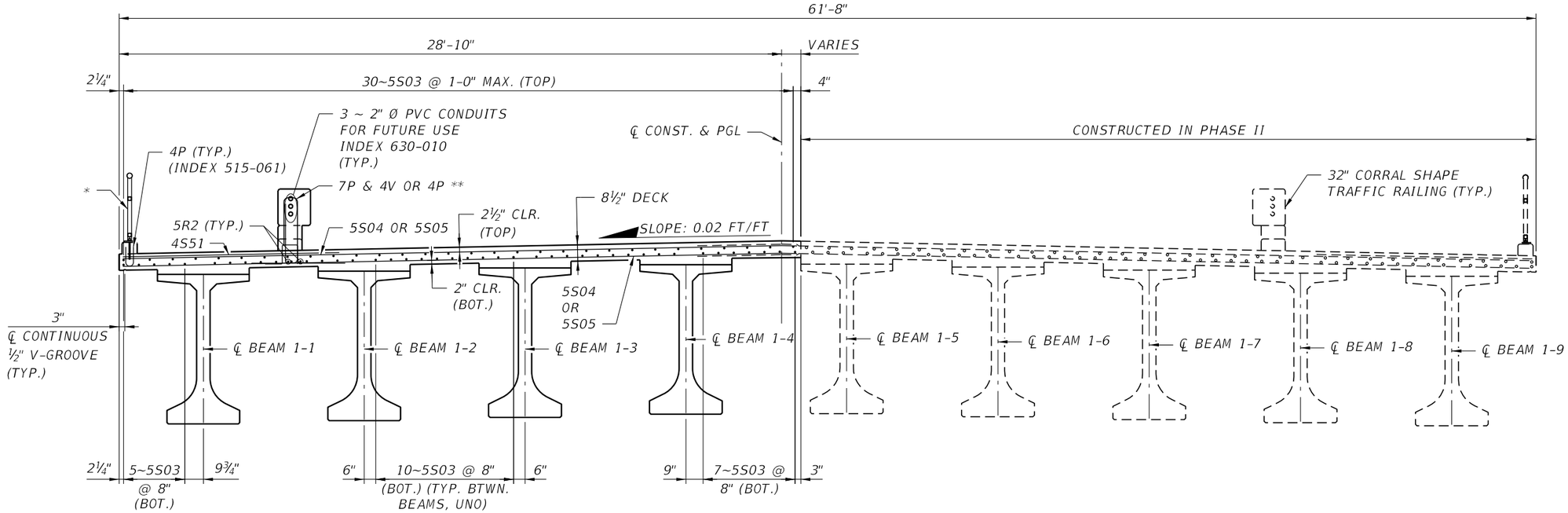

SUPERSTRUCTURE SECTION

(SPAN 1 - PHASE IV)

BRIDGE NO. 124143

NOTICE: THE OFFICIAL RECORD OF THIS SHEET IS THE ELECTRONIC FILE DIGITALLY SIGNED AND SEALED UNDER RULE 61G15-23.004, F.A.C.

REVISIONS					
DATE	BY	DESCRIPTION	DATE	BY	DESCRIPTION

Kisinger Campo & Associates Corp.
201 N. Franklin Street
Suite 400
Tampa, FL 33602
Alfredo Jose Layrisse, PE No. 75610

DRAWN BY:	CHECKED BY:	DESIGNED BY:	CHECKED BY:
JBH 04-21	KL 04-21	DAA 02-20	SKB 03-20

LEE COUNTY PUBLIC WORKS
DEPARTMENT OF TRANSPORTATION

ROAD NO.	COUNTY	COUNTY PROJECT No
CR 865	LEE	CN160002

SHEET TITLE: SUPERSTRUCTURE SECTION (1 OF 3)

REF. DWG. NO.

PROJECT NAME: ESTERO BLVD. (CR 865) OVER BIG CARLOS PASS

SHEET NO. B1-100

NOTES:

1. STAGGER LAP SPLICES BETWEEN ADJACENT TRANSVERSE AND LONGITUDINAL BARS.
2. FIELD ADJUST LONGITUDINAL BARS AS NECESSARY TO MEET SPACING REQUIREMENTS ALONG CURVE.
3. ALL REQUIRED REBAR LAP SPLICES SHALL BE A MINIMUM OF 1'-8" FOR NO. 5 BARS.

* 42" BRIDGE PEDESTRIAN/BICYCLE RAILING (ALUMINUM), SCHEME 2, INDEX 515-061 (TYP.)

** SEE SHEETS B1-121 THRU B1-126 FOR 32" CORRAL BARRIER DETAILS.

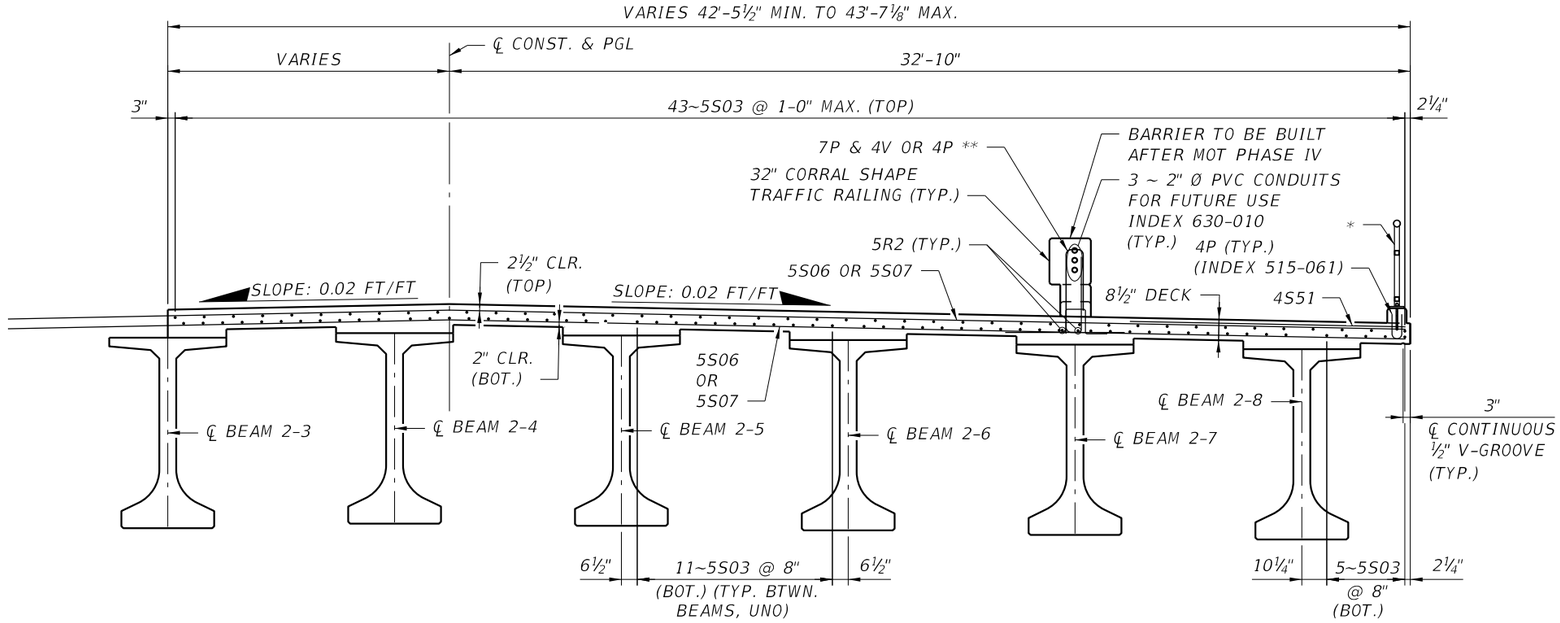

SUPERSTRUCTURE SECTION
(SPAN 2 - PHASE II)

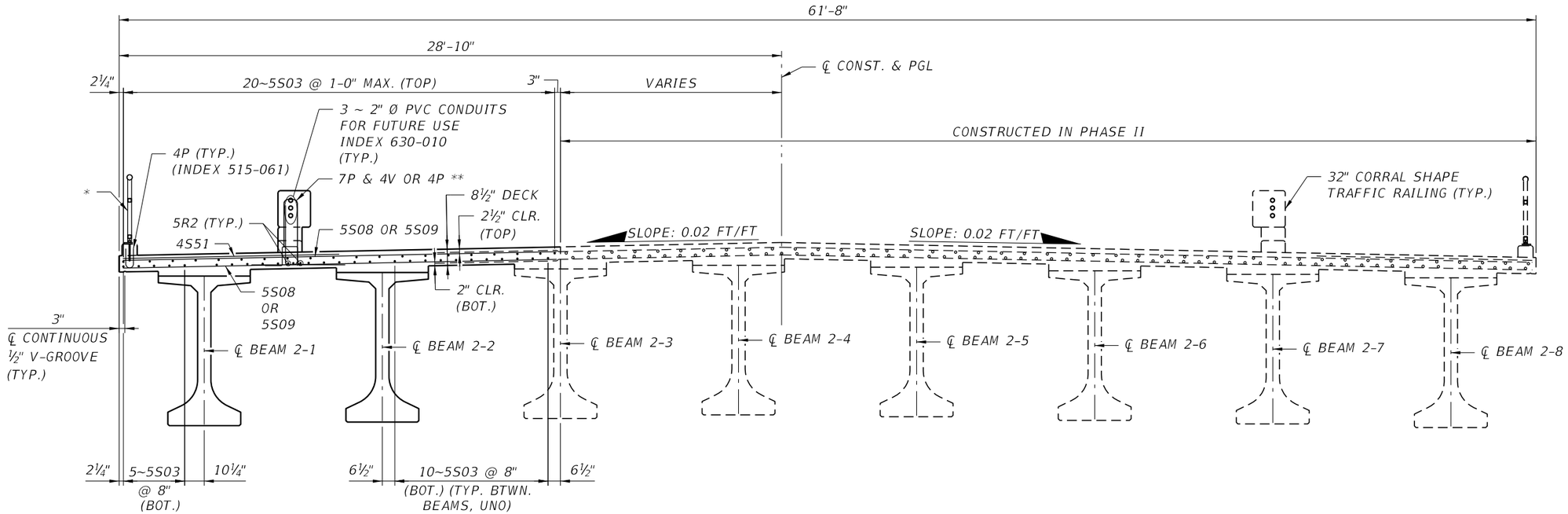

SUPERSTRUCTURE SECTION
(SPAN 2 - PHASE IV)

BRIDGE NO. 124143

NOTICE: THE OFFICIAL RECORD OF THIS SHEET IS THE ELECTRONIC FILE DIGITALLY SIGNED AND SEALED UNDER RULE 61G15-23.004, F.A.C.

REVISIONS					
DATE	BY	DESCRIPTION	DATE	BY	DESCRIPTION

Kisinger Campo & Associates Corp.
201 N. Franklin Street
Suite 400
Tampa, FL 33602
Alfredo Jose Layrisse, PE No. 75610

DRAWN BY: JBH 04-21
CHECKED BY: KL 04-21
DESIGNED BY: DAA 02-20
CHECKED BY: SKB 03-20

LEE COUNTY PUBLIC WORKS
DEPARTMENT OF TRANSPORTATION

ROAD NO.	COUNTY	COUNTY PROJECT No
CR 865	LEE	CN160002

SHEET TITLE: SUPERSTRUCTURE SECTION (2 OF 3)

REF. DWG. NO.

PROJECT NAME: ESTERO BLVD. (CR 865) OVER BIG CARLOS PASS

SHEET NO. B1-101

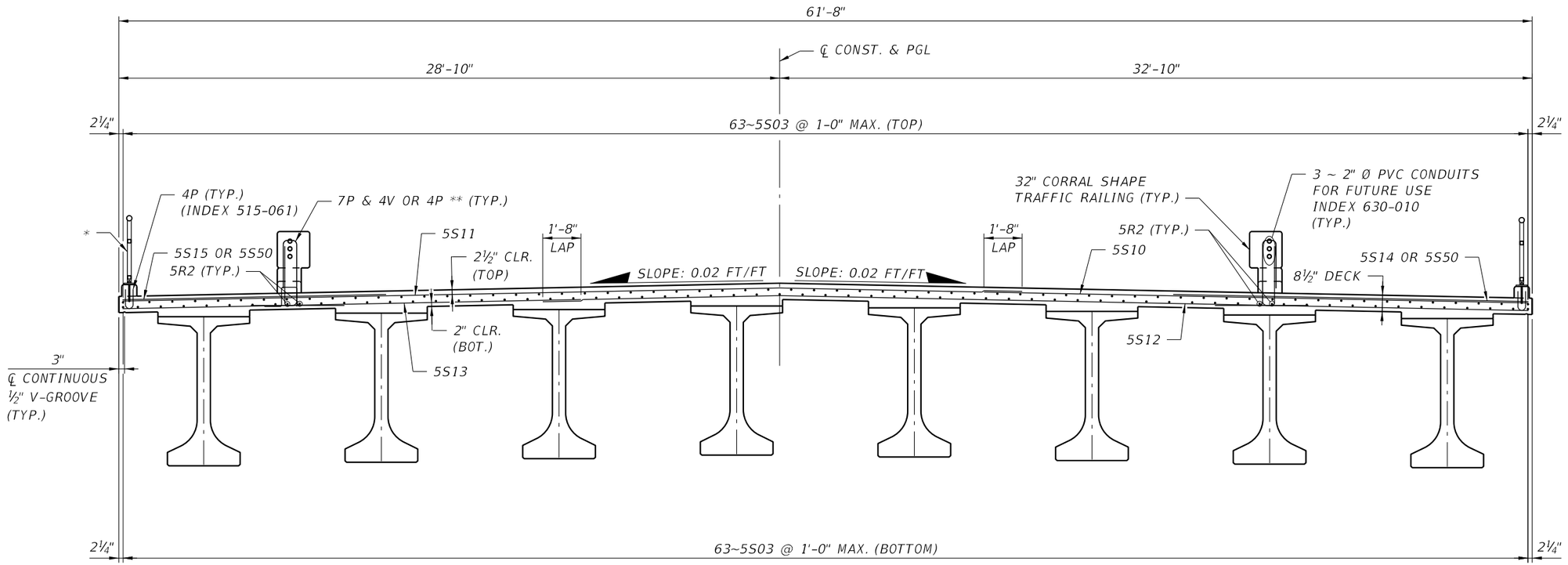

SUPERSTRUCTURE SECTION
(SPANS 3 THRU 14)

NOTES:

1. STAGGER LAP SPLICES BETWEEN ADJACENT TRANSVERSE AND LONGITUDINAL BARS.
2. FIELD ADJUST LONGITUDINAL BARS AS NECESSARY TO MEET SPACING REQUIREMENTS ALONG CURVE.
3. ALL REQUIRED REBAR LAP SPLICES SHALL BE A MINIMUM OF 1'-8" FOR NO. 5 BARS.

* 42" BRIDGE PEDESTRIAN/BICYCLE RAILING (ALUMINUM), SCHEME 2, INDEX 515-061 (TYP.)

** SEE SHEETS B1-121 THRU B1-126 FOR 32" CORRAL BARRIER DETAILS.

BRIDGE NO. 124143

REVISIONS					
DATE	BY	DESCRIPTION	DATE	BY	DESCRIPTION

Kisinger Campo & Associates Corp.
201 N. Franklin Street
Suite 400
Tampa, FL 33602
Alfredo Jose Layrisse, PE No. 75610

DRAWN BY:	JBH 04-21
CHECKED BY:	KL 04-21
DESIGNED BY:	DAA 02-20
CHECKED BY:	SKB 03-20

LEE COUNTY PUBLIC WORKS
DEPARTMENT OF TRANSPORTATION

ROAD NO.	COUNTY	COUNTY PROJECT No
CR 865	LEE	CN160002

SHEET TITLE: SUPERSTRUCTURE SECTION (3 OF 3)

REF. DWG. NO.:

PROJECT NAME: ESTERO BLVD. (CR 865) OVER BIG CARLOS PASS

SHEET NO.: B1-102

NOTICE: THE OFFICIAL RECORD OF THIS SHEET IS THE ELECTRONIC FILE DIGITALLY SIGNED AND SEALED UNDER RULE 61G15-23.004, F.A.C.

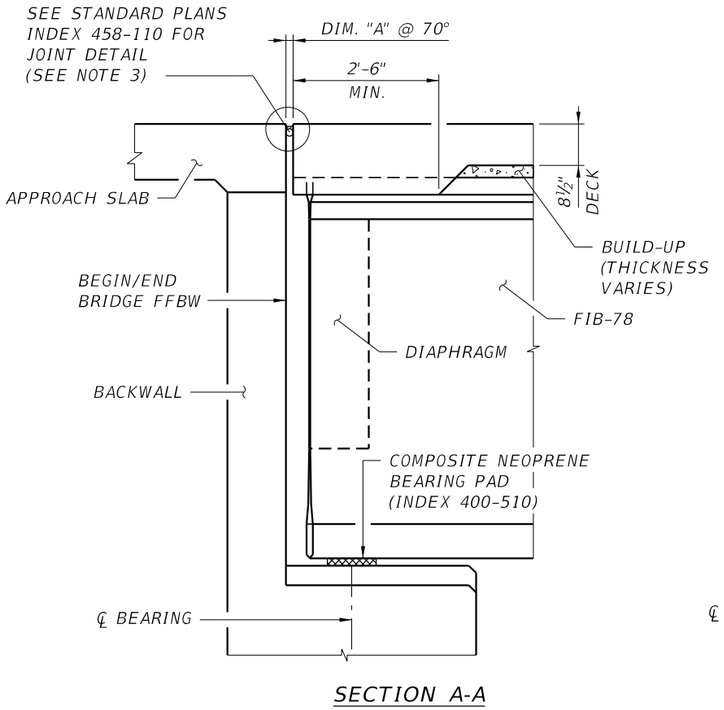

SECTION A-A

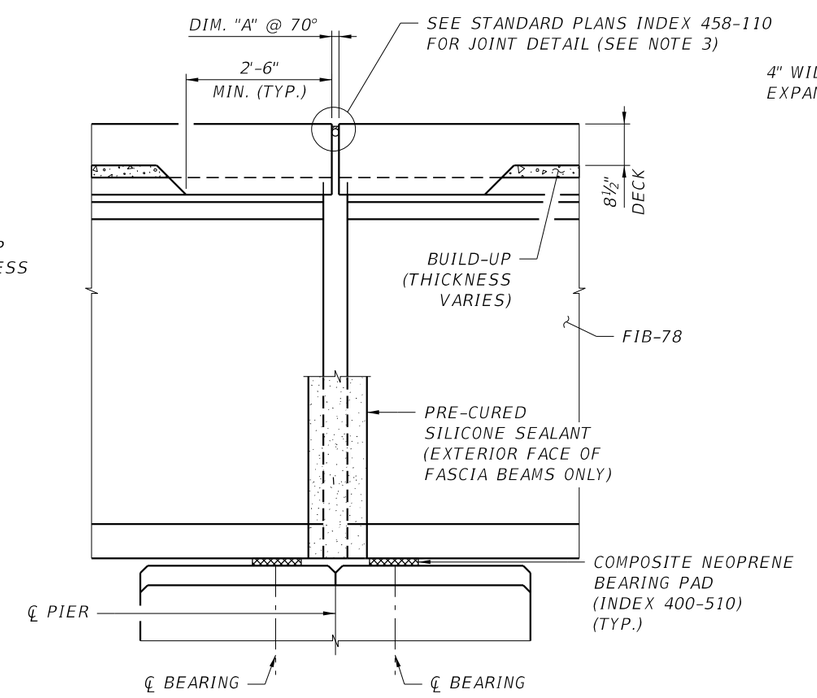

SECTION B-B

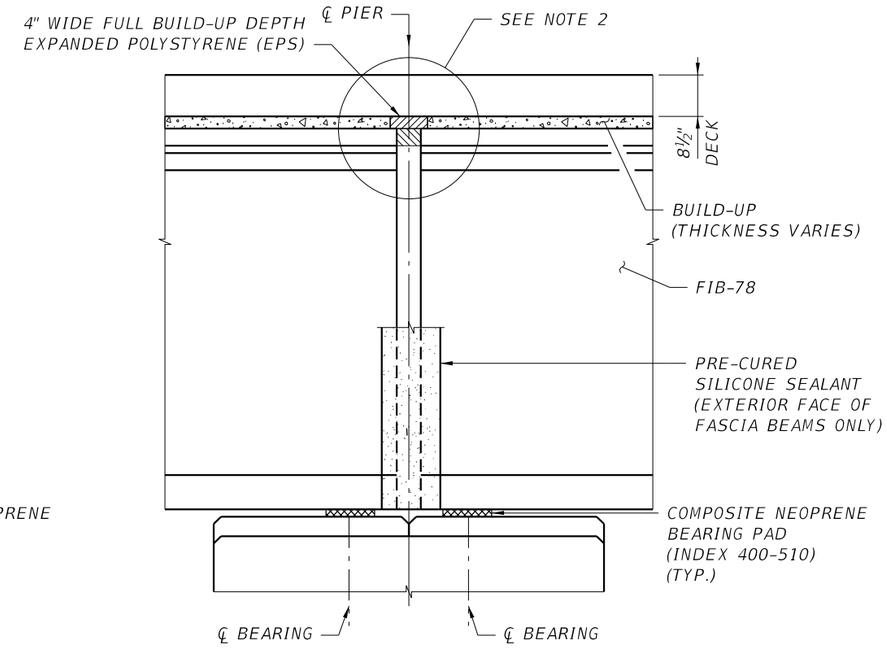

SECTION AT PIERS WITH CONTINUOUS DECK

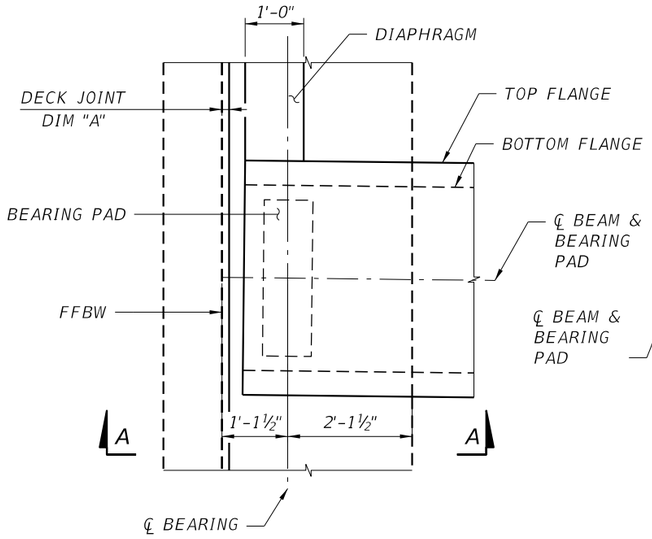

PLAN VIEW OF JOINT AT END BENT

END BENT 1 SHOWN, END BENT 15 SIMILAR

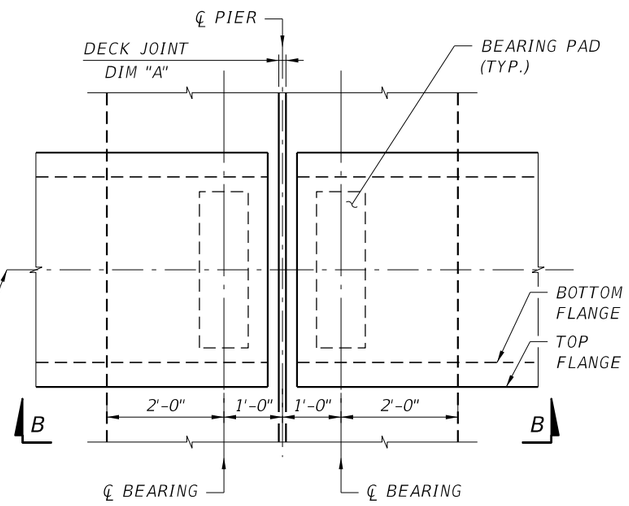

PLAN VIEW OF JOINT AT PIER

PIERS 2, 3, 5, 6, 9, 10, 11, AND 13

NOTES:

1. SEE SHEET 2 OF 9 FOR POURED EXPANSION JOINT DATA TABLE.
2. SEE SHEET 7 OF 9 FOR DECK POURING SEQUENCE AND CONSTRUCTION JOINT DETAILS.
3. COVER PLATE OVER DECK OPEN JOINTS REQUIRED ON SIDEWALKS.

BRIDGE NO. 124143

NOTICE: THE OFFICIAL RECORD OF THIS SHEET IS THE ELECTRONIC FILE DIGITALLY SIGNED AND SEALED UNDER RULE 61G15-23.004, F.A.C.

REVISIONS					
DATE	BY	DESCRIPTION	DATE	BY	DESCRIPTION

Kisinger Campo & Associates Corp.
201 N. Franklin Street
Suite 400
Tampa, FL 33602
Alfredo Jose Layrisse, PE No. 75610

DRAWN BY: DAA 11-19
CHECKED BY: KL 04-21
DESIGNED BY: DAA 11-19
CHECKED BY: SKB 12-19

LEE COUNTY PUBLIC WORKS
DEPARTMENT OF TRANSPORTATION

ROAD NO.	COUNTY	COUNTY PROJECT No
CR 865	LEE	CN160002

SHEET TITLE: SUPERSTRUCTURE DETAILS (1 OF 9)

REF. DWG. NO.

PROJECT NAME: ESTERO BLVD. (CR 865) OVER BIG CARLOS PASS

SHEET NO. B1-103

BEARING PAD DATA TABLE				Table Date 7-01-13
SPAN NO(s).	BEAM NO(s).	PAD TYPE	BEAM TYPE	BEAM END *
1	ALL	F	FIB 78	1, 2
2	ALL	F	FIB 78	1, 2
3	ALL	F	FIB 78	1, 2
4	ALL	F	FIB 78	1, 2
5	ALL	F	FIB 78	1, 2
6	ALL	F	FIB 78	1, 2
7	ALL	F	FIB 78	1, 2
8	ALL	F	FIB 78	1, 2
9	ALL	F	FIB 78	1, 2
10	ALL	F	FIB 78	1, 2
11	ALL	F	FIB 78	1, 2
12	ALL	F	FIB 78	1, 2
13	ALL	F	FIB 78	1, 2
14	ALL	F	FIB 78	1, 2

NOTE [Notes Date 07-01-14]:
Work this table with Index 400-510 for Pad Types AA, AB, D, E, F, G, H, J & K, and/or any project specific bearing pads.
* END 1 = Begin Bridge end of beam (Back station).
END 2 = End Bridge end of beam (Ahead station).

POURED EXPANSION JOINT DATA TABLE INDEX 458-110			Table Date 1-01-09
LOCATION	DIM. "A" @ 70°F	TOTAL DESIGN MOVEMENT	DIM. "A" ADJUSTMENT PER 10°F
END BENT 1	1.75"	0.523"	0.062"
PIER 2	1.75"	1.010"	0.120"
PIER 3	1.75"	1.461"	0.174"
PIER 5	1.75"	1.461"	0.174"
PIER 6	1.75"	1.947"	0.232"
PIER 9	1.75"	1.947"	0.232"
PIER 10	1.75"	0.974"	0.116"
PIER 11	1.75"	1.461"	0.174"
PIER 13	1.75"	1.947"	0.232"
END BENT 15	1.75"	0.974"	0.116"

NOTE:
Dim. "A" adjustment per 10°F shown is measured perpendicular to ℄ Expansion Joint. Work this table with Standard Plans Index 458-110.

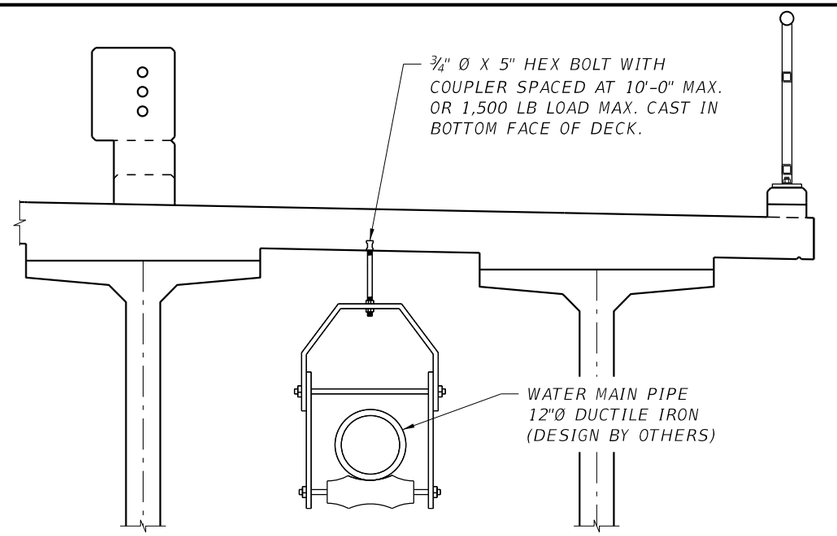

PARTIAL SECTION THRU SUPERSTRUCTURE

(SHOWING TYPICAL DETAILS FOR WATER MAIN PIPE)

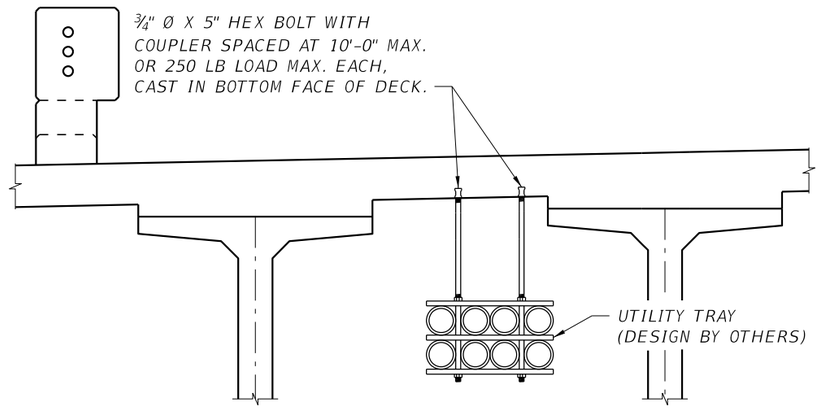

PARTIAL SECTION THRU SUPERSTRUCTURE

(SHOWING TYPICAL DETAILS FOR UTILITY TRAY)

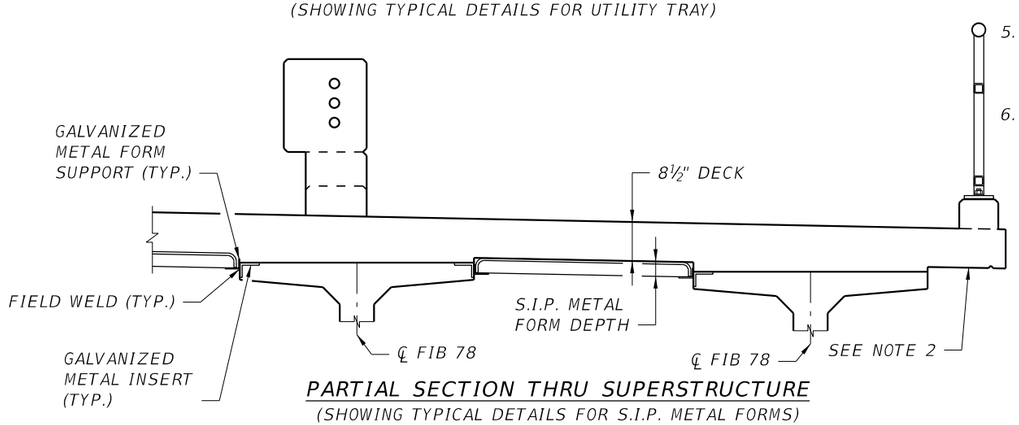

PARTIAL SECTION THRU SUPERSTRUCTURE

(SHOWING TYPICAL DETAILS FOR S.I.P. METAL FORMS)

WATER MAIN HANGER AND UTILITY TRAY NOTES:

1. ALL WATER MAIN HANGER COMPONENTS SHALL BE A316 STAINLESS STEEL EXCEPT THE PIPE ROLLER WHICH SHALL BE OF NON-CONDUCTIVE MATERIAL
2. ALL UTILITY TRAY HANGER COMPONENTS SHALL BE A316 STAINLESS STEEL. ALL CONDUITS SHALL BE BULLET RESISTANT FIBERGLASS
3. WATER MAIN HANGER AND UTILITY TRAY SHALL ACCOMMODATE BRIDGE MOVEMENT.
4. SUBMIT SIGNED AND SEALED DRAWINGS AND CALCULATIONS TO THE EOR FOR APPROVAL PRIOR TO CONSTRUCTION.
5. ADHERE TO LEE COUNTY UTILITIES TECHNICAL SPECIFICATIONS 33 11 03 REGARDING CORROSION PROTECTION AND COATING REQUIREMENTS FOR DUCTILE IRON PIPE.
6. ADJUST WATER MAIN HANGER AND UTILITY TRAY HORIZONTAL LOCATION WITH RESPECT TO GIRDERS NEAR PIER 2 TO ACCOMMODATE BRIDGE TYPICAL SECTION CHANGE AND DIAPHRAGMS.
7. PLACE HANGERS 4'-0" FROM DECK OPEN JOINTS
8. ALL HANGER PARTS INCLUDING THE INSERT TO BE ELECTRICALLY INSULATED FROM CONTACT WITH CARBON STEEL AND SIP
9. UTILITY TRAY TO ACCOMODATE 4 4"∅ CONDUITS

STAY-IN-PLACE METAL FORM NOTES:

1. THE SUPERSTRUCTURE CONCRETE QUANTITIES DO NOT INCLUDE THE CONCRETE REQUIRED TO FILL THE STAY-IN-PLACE METAL FORM FLUTES.
2. THE COST OF THE STAY-IN-PLACE METAL FORMS, THE CONCRETE REQUIRED TO FILL THE FLUTES, THE METAL FORM ATTACHMENTS AND ACCESSORIES, AND ALL MISCELLANEOUS ITEMS REQUIRED TO INSTALL THE FORMS SHALL BE INCLUDED IN THE CONTRACT UNIT PRICE FOR THE SUPERSTRUCTURE CONCRETE.
3. SEE SECTION 400 OF THE SPECIFICATIONS FOR INSTALLATION REQUIREMENTS FOR S.I.P. FORMS AND SUPPORT COMPONENTS. ELECTRICAL GROUNDING TO REINFORCING STEEL IS PROHIBITED.
4. S.I.P. METAL FORMS ARE NOT ALLOWED TO BE USED FOR THE OVERHANGS.
5. PROVIDE EXPANDED POLYSTYRENE (EPS) TO COMPLETELY FILL S.I.P. FORM VALLEY IF ℄ PIER LIES ANYWHERE WITHIN FORM VALLEY.
6. SEE SECTION 400-5.7.4.1 FOR ANY TEMPORARY EXPOSED STEEL WHERE THE GALVANIZED COATING HAS BEEN DAMAGED.

BRIDGE NO. 124143

NOTICE: THE OFFICIAL RECORD OF THIS SHEET IS THE ELECTRONIC FILE DIGITALLY SIGNED AND SEALED UNDER RULE 61G15-23.004, F.A.C.

REVISIONS					
DATE	BY	DESCRIPTION	DATE	BY	DESCRIPTION

Kisinger Campo & Associates Corp.
201 N. Franklin Street
Suite 400
Tampa, FL 33602
Alfredo Jose Layrisse, PE No. 75610

DRAWN BY:	CHECKED BY:	DESIGNED BY:	CHECKED BY:
DAA 11-19	KL 04-21	DAA 11-19	SKB 12-19

LEE COUNTY PUBLIC WORKS DEPARTMENT OF TRANSPORTATION

ROAD NO.	COUNTY	COUNTY PROJECT No
CR 865	LEE	CN160002

SHEET TITLE: SUPERSTRUCTURE DETAILS (2 OF 9)

REF. DWG. NO.

PROJECT NAME: ESTERO BLVD. (CR 865) OVER BIG CARLOS PASS

SHEET NO. B1-104

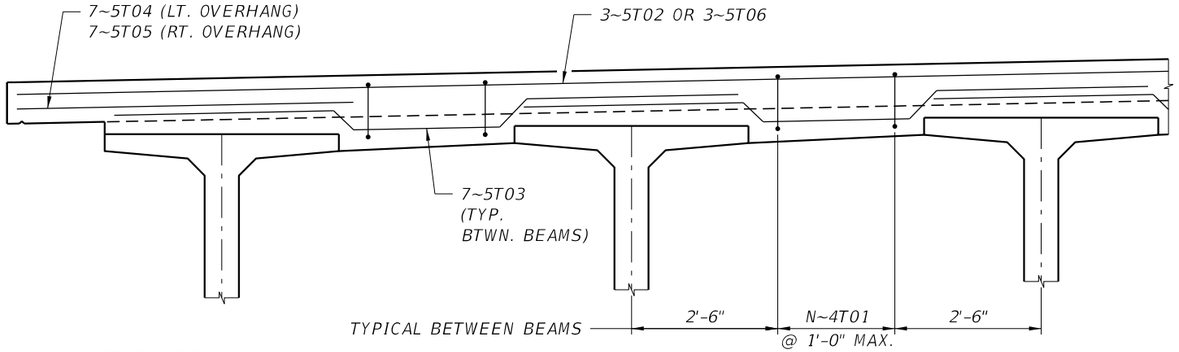

NOTE:

FIELD TRIM PHASE III 5T03 BARS AT SPAN 2 CONSTRUCTION JOINT AS NECESSARY.

PARTIAL SECTION AT THICKENED END

(TYPICAL DECK REINFORCEMENT NOT SHOWN FOR CLARITY)

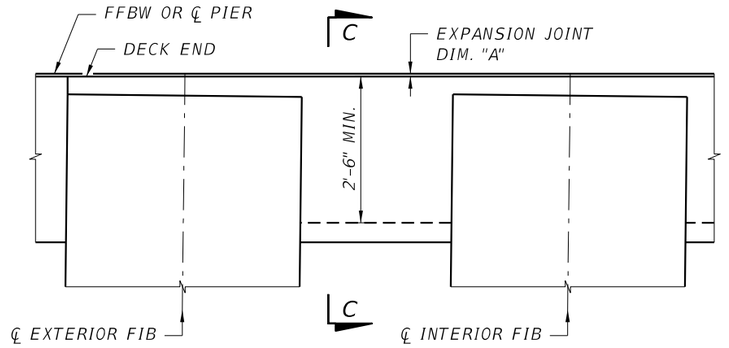

PARTIAL PLAN VIEW OF THICKENED END SLAB

PRESTRESSED BEAM STABILITY AND TEMPORARY BRACING NOTES:

1. Ensure beam stability and design temporary beam bracing, including connections, in accordance with the Specifications and the FDOT Structures Manual.
2. Construction:
   a. Evaluate the beam stability and bracing requirements against the design assumptions including:
      i. Loadings given in the plans.
      ii. Beam Camber (less than 6 inches) and Beam Sweep (in compliance with Specification 450 requirements).
      iii. Bearings given in the plans.
   b. Securely connect bracing to each beam. Do not allow the bracing to exert any vertical force on the outer edge of the top flange. Preform all bolt holes in beams and fill after use in accordance with the Specifications.

TABLE OF PRESTRESSED I-BEAM TEMPORARY BRACING MINIMUM REQUIREMENTS AND LOADS

Table Date 8-05-15

SPAN NO.	BEAM NO.	STAGE 1	STAGE 2			STAGE 3	
		BRACE ENDS PRIOR TO CRANE RELEASE?[1] (YES/NO)	TOTAL LINES OF BRACING[2,3,7]	MINIMUM NUMBER OF ADJACENT BEAMS ERECTED	HORIZONTAL LOAD AT EACH BRACE[4] (KIP)	TOTAL LINES OF BRACING[3,5,7]	OVERTURNING MOMENT AT EACH BRACE[6] (KIP-FT)
1	ALL	YES	5	3	16.6	5	79.0
2	ALL	YES	5	3	15.6	5	95.9
3	ALL	YES	5	3	15.6	5	95.9
4	ALL	YES	5	3	15.5	5	65.1
5	ALL	YES	5	3	15.4	5	161.8
6	ALL	YES	5	3	15.4	5	63.2
7	ALL	YES	5	3	15.4	5	63.3
8	ALL	YES	5	3	15.4	5	63.2
9	ALL	YES	5	3	15.5	5	169.4
10	ALL	YES	5	3	15.6	5	95.9
11	ALL	YES	5	3	15.6	5	95.9
12	ALL	YES	5	3	15.5	5	80.2
13	ALL	YES	5	3	15.6	5	95.8
14	ALL	YES	5	3	15.6	5	95.9

1. Anchor Bracing loads to be determined by the Contractor.
2. Total lines of Stage 2 bracing, including end bracing, are required to be installed within 24 hours after initial beam placement.
3. Equally space bracing along the length of the beams allowing for variations due connection conflicts and skew.
4. LRFD Strength III loads applied to beam at brace point (see SDG 11.6).
5. Total lines of Stage 3 bracing, including end bracing, are required to be installed prior to deck placement.
6. LRFD Strength I overturning moment applied to beam at brace point (see SDG 11.6).
7. Submit shop drawings for temporary bracing plan including locations of preformed beam holes/inserts and repair for the holes/inserts after use.
8. LIVE LOADS SHALL NOT EXTEND ONTO OUTLOOK DURING CURING PROCESS.

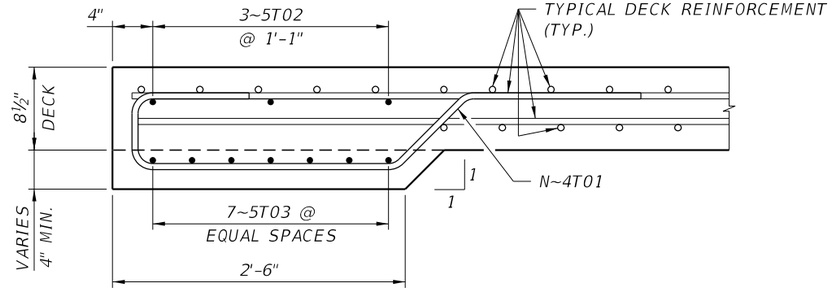

SECTION C-C

4T01 BARS		
SPAN	N	
	BEGIN	END
1	3	3
2	4	4
3	4	N/A
4	N/A	4
5	4	4
6	4	N/A
7	N/A	N/A
8	N/A	4
9	4	4
10	4	4
11	4	N/A
12	N/A	4
13	4	N/A
14	N/A	4

BRIDGE NO. 124143

NOTICE: THE OFFICIAL RECORD OF THIS SHEET IS THE ELECTRONIC FILE DIGITALLY SIGNED AND SEALED UNDER RULE 61G15-23.004, F.A.C.

REVISIONS

DATE	BY	DESCRIPTION	DATE	BY	DESCRIPTION

Kisinger Campo & Associates Corp.
201 N. Franklin Street
Suite 400
Tampa, FL 33602
Alfredo Jose Layrisse, PE No. 75610

DRAWN BY: DAA 11-19
CHECKED BY: KL 04-21
DESIGNED BY: DAA 11-19
CHECKED BY: SKB 12-19

LEE COUNTY PUBLIC WORKS
DEPARTMENT OF TRANSPORTATION

ROAD NO.	COUNTY	COUNTY PROJECT No
CR 865	LEE	CN160002

SHEET TITLE: SUPERSTRUCTURE DETAILS (3 OF 9)

REF. DWG. NO.:

PROJECT NAME: ESTERO BLVD. (CR 865) OVER BIG CARLOS PASS

SHEET NO.: B1-105

jhanna 2/24/2022 3:20:51 PM c:\pwworkingdir\kca-pw.bentley.com_kca-pw-01\josh hanna\dms00783\B1SuperstDet03.dgn

BUILD-UP & DEFLECTION DATA TABLE FOR PRESTRESSED I-BEAMS

Table Date 07/01/17

LOCATION		REQUIRED THEORETICAL BUILD-UP OVER ℄ BEAM			NET BEAM CAMBER (PRESTRESS - DEAD LOAD OF BEAM) @ RELEASE	NET BEAM CAMBER (PRESTRESS - DEAD LOAD OF BEAM) @ 120 DAYS	DEAD LOAD DEFLECTION DURING DECK POUR @ 120 DAYS DIM A	BUILD-UP CASE NO.
SPAN NO.	BEAM NO.	AT BEGIN SPAN DIM B	AT ℄ SPAN DIM C	AT END SPAN DIM D				
1	1-1	0'-2¾"	0'-1"	0'-2¾"	2.378"	5.175"	3.497"	3
1	1-2	0'-2½"	0'-1"	0'-2½"	2.378"	5.175"	3.788"	3
1	1-3	0'-2½"	0'-1"	0'-2½"	2.375"	5.171"	3.796"	3
1	1-4	0'-2½"	0'-1"	0'-2½"	2.375"	5.171"	3.791"	3
1	1-5	0'-3¼"	0'-1"	0'-3¼"	2.373"	5.167"	2.839"	3
1	1-6	0'-2½"	0'-1"	0'-2½"	2.370"	5.163"	3.598"	3
1	1-7	0'-2½"	0'-1"	0'-2½"	2.370"	5.163"	3.598"	3
1	1-8	0'-2½"	0'-1"	0'-2½"	2.368"	5.159"	3.606"	3
1	1-9	0'-2½"	0'-1"	0'-2½"	2.368"	5.159"	3.601"	3
2	2-1	0'-4"	0'-1"	0'-4"	2.483"	5.245"	2.475"	3
2	2-2	0'-3⅝"	0'-1"	0'-3⅝"	2.479"	5.240"	2.874"	3
2	2-3	0'-4⅛"	0'-1"	0'-4⅞"	2.474"	5.234"	1.654"	3
2	2-4	0'-3½"	0'-1"	0'-3½"	2.469"	5.228"	2.935"	3
2	2-5	0'-3"	0'-1"	0'-3"	2.463"	5.222"	2.938"	3
2	2-6	0'-3"	0'-1"	0'-3"	2.458"	5.215"	2.969"	3
2	2-7	0'-3"	0'-1"	0'-3"	2.452"	5.208"	2.994"	3
2	2-8	0'-2⅞"	0'-1"	0'-2⅞"	2.446"	5.199"	3.101"	3
3	3-1	0'-4"	0'-1"	0'-4"	2.483"	5.245"	2.531"	3
3	3-2	0'-3⅝"	0'-1"	0'-3⅝"	2.479"	5.240"	2.874"	3
3	3-3	0'-3⅝"	0'-1"	0'-3⅝"	2.474"	5.234"	2.902"	3
3	3-4	0'-3½"	0'-1"	0'-3½"	2.468"	5.228"	2.936"	3
3	3-5	0'-3"	0'-1"	0'-3"	2.464"	5.222"	2.938"	3
3	3-6	0'-3"	0'-1"	0'-3"	2.459"	5.215"	2.966"	3
3	3-7	0'-2⅞"	0'-1"	0'-2⅞"	2.452"	5.207"	3.005"	3
3	3-8	0'-2⅞"	0'-1"	0'-2⅞"	2.446"	5.200"	3.042"	3
4	4-1	0'-3½"	0'-1"	0'-3½"	2.470"	5.229"	2.753"	3
4	4-2	0'-3⅜"	0'-1"	0'-3⅜"	2.469"	5.228"	2.921"	3
4	4-3	0'-3⅜"	0'-1"	0'-3⅜"	2.468"	5.227"	2.925"	3
4	4-4	0'-3¼"	0'-1"	0'-3¼"	2.467"	5.226"	2.930"	3
4	4-5	0'-3¼"	0'-1"	0'-3¼"	2.467"	5.225"	2.933"	3
4	4-6	0'-3¼"	0'-1"	0'-3¼"	2.466"	5.225"	2.937"	3
4	4-7	0'-3¼"	0'-1"	0'-3¼"	2.465"	5.223"	2.944"	3
4	4-8	0'-3⅜"	0'-1"	0'-3⅜"	2.464"	5.222"	2.797"	3

BUILD-UP & DEFLECTION DATA TABLE FOR PRESTRESSED I-BEAMS

Table Date 07/01/17

LOCATION		REQUIRED THEORETICAL BUILD-UP OVER ℄ BEAM			NET BEAM CAMBER (PRESTRESS - DEAD LOAD OF BEAM) @ RELEASE	NET BEAM CAMBER (PRESTRESS - DEAD LOAD OF BEAM) @ 120 DAYS	DEAD LOAD DEFLECTION DURING DECK POUR @ 120 DAYS DIM A	BUILD-UP CASE NO.
SPAN NO.	BEAM NO.	AT BEGIN SPAN DIM B	AT ℄ SPAN DIM C	AT END SPAN DIM D				
5	5-1	0'-3½"	0'-1"	0'-3½"	2.467"	5.226"	2.775"	3
5	5-2	0'-3¼"	0'-1"	0'-3¼"	2.467"	5.226"	2.930"	3
5	5-3	0'-3¼"	0'-1"	0'-3¼"	2.467"	5.226"	2.930"	3
5	5-4	0'-3¼"	0'-1"	0'-3¼"	2.467"	5.226"	2.930"	3
5	5-5	0'-3¼"	0'-1"	0'-3¼"	2.467"	5.226"	2.930"	3
5	5-6	0'-3¼"	0'-1"	0'-3¼"	2.467"	5.226"	2.930"	3
5	5-7	0'-3¼"	0'-1"	0'-3¼"	2.467"	5.226"	2.930"	3
5	5-8	0'-3½"	0'-1"	0'-3½"	2.467"	5.226"	2.775"	3
6	6-1	0'-1"	0'-4⅛"	0'-1"	2.468"	5.228"	2.921"	4
6	6-2	0'-1"	0'-4¼"	0'-1"	2.468"	5.228"	3.100"	4
6	6-3	0'-1"	0'-4¼"	0'-1"	2.468"	5.228"	3.100"	4
6	6-4	0'-1"	0'-4¼"	0'-1"	2.468"	5.228"	3.100"	4
6	6-5	0'-1"	0'-4¼"	0'-1"	2.468"	5.228"	3.100"	4
6	6-6	0'-1"	0'-4¼"	0'-1"	2.468"	5.228"	3.100"	4
6	6-7	0'-1"	0'-4¼"	0'-1"	2.468"	5.228"	3.100"	4
6	6-8	0'-1"	0'-4⅛"	0'-1"	2.468"	5.228"	2.921"	4
7	7-1	0'-1"	0'-4⅛"	0'-1"	2.470"	5.229"	2.912"	4
7	7-2	0'-1"	0'-4¼"	0'-1"	2.470"	5.229"	3.090"	4
7	7-3	0'-1"	0'-4¼"	0'-1"	2.470"	5.229"	3.090"	4
7	7-4	0'-1"	0'-4¼"	0'-1"	2.470"	5.229"	3.090"	4
7	7-5	0'-1"	0'-4¼"	0'-1"	2.470"	5.229"	3.090"	4
7	7-6	0'-1"	0'-4¼"	0'-1"	2.470"	5.229"	3.090"	4
7	7-7	0'-1"	0'-4¼"	0'-1"	2.470"	5.229"	3.090"	4
7	7-8	0'-1"	0'-4⅛"	0'-1"	2.470"	5.229"	2.912"	4
8	8-1	0'-1"	0'-4⅛"	0'-1"	2.470"	5.229"	2.912"	4
8	8-2	0'-1"	0'-4¼"	0'-1"	2.470"	5.229"	3.090"	4
8	8-3	0'-1"	0'-4¼"	0'-1"	2.470"	5.229"	3.090"	4
8	8-4	0'-1"	0'-4¼"	0'-1"	2.470"	5.229"	3.090"	4
8	8-5	0'-1"	0'-4¼"	0'-1"	2.470"	5.229"	3.090"	4
8	8-6	0'-1"	0'-4¼"	0'-1"	2.470"	5.229"	3.090"	4
8	8-7	0'-1"	0'-4¼"	0'-1"	2.470"	5.229"	3.090"	4
8	8-8	0'-1"	0'-4⅛"	0'-1"	2.470"	5.229"	2.912"	4

NOTES: Work this sheet with Standard Plans Index 450-199.

BRIDGE NO. 124143

NOTICE: THE OFFICIAL RECORD OF THIS SHEET IS THE ELECTRONIC FILE DIGITALLY SIGNED AND SEALED UNDER RULE 61G15-23.004, F.A.C.

REVISIONS

DATE	BY	DESCRIPTION	DATE	BY	DESCRIPTION

Kisinger Campo & Associates Corp.
201 N. Franklin Street
Suite 400
Tampa, FL 33602
Alfredo Jose Layrisse, PE No. 75610

DRAWN BY: DAA 11-19
CHECKED BY: KL 04-21
DESIGNED BY: DAA 11-19
CHECKED BY: SKB 12-19

LEE COUNTY PUBLIC WORKS DEPARTMENT OF TRANSPORTATION

ROAD NO.	COUNTY	COUNTY PROJECT No
CR 865	LEE	CN160002

SHEET TITLE: SUPERSTRUCTURE DETAILS (4 OF 9)

REF. DWG. NO.:

PROJECT NAME: ESTERO BLVD. (CR 865) OVER BIG CARLOS PASS

SHEET NO.: B1-106

BUILD-UP & DEFLECTION DATA TABLE FOR PRESTRESSED I-BEAMS

Table Date 07/01/17

LOCATION		REQUIRED THEORETICAL BUILD-UP OVER ℄ BEAM			NET BEAM CAMBER (PRESTRESS - DEAD LOAD OF BEAM) @ RELEASE	NET BEAM CAMBER (PRESTRESS - DEAD LOAD OF BEAM) @ 120 DAYS	DEAD LOAD DEFLECTION DURING DECK POUR @ 120 DAYS DIM A	BUILD-UP CASE NO.
SPAN NO.	BEAM NO.	AT BEGIN SPAN DIM B	AT ℄ SPAN DIM C	AT END SPAN DIM D				
9	9-1	0'-1"	0'-4"	0'-1"	2.472"	5.233"	2.861"	4
9	9-2	0'-1"	0'-4 1/4"	0'-1"	2.472"	5.232"	3.070"	4
9	9-3	0'-1"	0'-4 1/4"	0'-1"	2.471"	5.230"	3.079"	4
9	9-4	0'-1"	0'-4 1/4"	0'-1"	2.470"	5.229"	3.088"	4
9	9-5	0'-1"	0'-4 3/8"	0'-1"	2.467"	5.226"	3.110"	4
9	9-6	0'-1"	0'-4 3/8"	0'-1"	2.466"	5.225"	3.119"	4
9	9-7	0'-1"	0'-4 3/8"	0'-1"	2.465"	5.223"	3.127"	4
9	9-8	0'-1"	0'-4 1/4"	0'-1"	2.464"	5.222"	2.980"	4
10	10-1	0'-2 3/4"	0'-1"	0'-2 3/4"	2.483"	5.245"	2.471"	3
10	10-2	0'-2 3/8"	0'-1"	0'-2 3/8"	2.479"	5.240"	2.813"	3
10	10-3	0'-2 3/8"	0'-1"	0'-2 3/8"	2.474"	5.234"	2.839"	3
10	10-4	0'-2 3/8"	0'-1"	0'-2 3/8"	2.468"	5.228"	2.873"	3
10	10-5	0'-1 3/4"	0'-1"	0'-1 3/4"	2.464"	5.222"	2.874"	3
10	10-6	0'-1 3/4"	0'-1"	0'-1 3/4"	2.459"	5.215"	2.902"	3
10	10-7	0'-1 3/4"	0'-1"	0'-1 3/4"	2.452"	5.207"	2.935"	3
10	10-8	0'-1 5/8"	0'-1"	0'-1 5/8"	2.446"	5.199"	2.976"	3
11	11-1	0'-4"	0'-1"	0'-4"	2.483"	5.245"	2.531"	3
11	11-2	0'-3 5/8"	0'-1"	0'-3 5/8"	2.479"	5.240"	2.874"	3
11	11-3	0'-3 5/8"	0'-1"	0'-3 5/8"	2.474"	5.234"	2.902"	3
11	11-4	0'-3 1/2"	0'-1"	0'-3 1/2"	2.468"	5.228"	2.937"	3
11	11-5	0'-3"	0'-1"	0'-3"	2.464"	5.222"	2.938"	3
11	11-6	0'-3"	0'-1"	0'-3"	2.459"	5.215"	2.966"	3
11	11-7	0'-2 7/8"	0'-1"	0'-2 7/8"	2.452"	5.208"	3.001"	3
11	11-8	0'-2 7/8"	0'-1"	0'-2 7/8"	2.446"	5.199"	3.042"	3
12	12-1	0'-3 1/8"	0'-1"	0'-3 1/8"	2.461"	5.218"	2.904"	3
12	12-2	0'-3 1/8"	0'-1"	0'-3 1/8"	2.462"	5.220"	2.950"	3
12	12-3	0'-3 1/8"	0'-1"	0'-3 1/8"	2.465"	5.223"	2.936"	3
12	12-4	0'-3 1/8"	0'-1"	0'-3 1/8"	2.467"	5.226"	2.922"	3
12	12-5	0'-3 1/2"	0'-1"	0'-3 1/2"	2.468"	5.228"	2.931"	3
12	12-6	0'-3 1/2"	0'-1"	0'-3 1/2"	2.471"	5.230"	2.917"	3
12	12-7	0'-3 1/2"	0'-1"	0'-3 1/2"	2.473"	5.233"	2.904"	3
12	12-8	0'-3 3/4"	0'-1"	0'-3 3/4"	2.474"	5.235"	2.639"	3

BUILD-UP & DEFLECTION DATA TABLE FOR PRESTRESSED I-BEAMS

Table Date 07/01/17

LOCATION		REQUIRED THEORETICAL BUILD-UP OVER ℄ BEAM			NET BEAM CAMBER (PRESTRESS - DEAD LOAD OF BEAM) @ RELEASE	NET BEAM CAMBER (PRESTRESS - DEAD LOAD OF BEAM) @ 120 DAYS	DEAD LOAD DEFLECTION DURING DECK POUR @ 120 DAYS DIM A	BUILD-UP CASE NO.
SPAN NO.	BEAM NO.	AT BEGIN SPAN DIM B	AT ℄ SPAN DIM C	AT END SPAN DIM D				
13	13-1	0'-2 7/8"	0'-1"	0'-2 7/8"	2.449"	5.203"	3.028"	3
13	13-2	0'-3"	0'-1"	0'-3"	2.455"	5.211"	2.987"	3
13	13-3	0'-3"	0'-1"	0'-3"	2.461"	5.219"	2.952"	3
13	13-4	0'-3"	0'-1"	0'-3"	2.466"	5.225"	2.924"	3
13	13-5	0'-3 5/8"	0'-1"	0'-3 5/8"	2.472"	5.232"	2.915"	3
13	13-6	0'-3 5/8"	0'-1"	0'-3 5/8"	2.476"	5.237"	2.888"	3
13	13-7	0'-3 5/8"	0'-1"	0'-3 5/8"	2.481"	5.242"	2.860"	3
13	13-8	0'-4"	0'-1"	0'-4"	2.486"	5.248"	2.513"	3
14	14-1	0'-2 7/8"	0'-1"	0'-2 7/8"	2.450"	5.205"	3.119"	3
14	14-2	0'-2 3/4"	0'-1"	0'-2 3/4"	2.457"	5.214"	3.176"	3
14	14-3	0'-2 3/4"	0'-1"	0'-2 3/4"	2.462"	5.220"	3.146"	3
14	14-4	0'-2 7/8"	0'-1"	0'-2 7/8"	2.467"	5.226"	3.117"	3
14	14-5	0'-3 3/8"	0'-1"	0'-3 3/8"	2.473"	5.233"	3.106"	3
14	14-6	0'-3 3/8"	0'-1"	0'-3 3/8"	2.477"	5.239"	3.076"	3
14	14-7	0'-3 1/2"	0'-1"	0'-3 1/2"	2.482"	5.244"	3.047"	3
14	14-8	0'-3 7/8"	0'-1"	0'-3 7/8"	2.487"	5.249"	2.599"	3

NOTES: Work this sheet with Standard Plans Index 450-199.

BRIDGE NO. 124143

NOTICE: THE OFFICIAL RECORD OF THIS SHEET IS THE ELECTRONIC FILE DIGITALLY SIGNED AND SEALED UNDER RULE 61G15-23.004, F.A.C.

REVISIONS

DATE	BY	DESCRIPTION	DATE	BY	DESCRIPTION

Kisinger Campo & Associates Corp.
201 N. Franklin Street
Suite 400
Tampa, FL 33602
Alfredo Jose Layrisse, PE No. 75610

DRAWN BY: DAA 11-19
CHECKED BY: KL 04-21
DESIGNED BY: DAA 11-19
CHECKED BY: SKB 12-19

LEE COUNTY PUBLIC WORKS
DEPARTMENT OF TRANSPORTATION

ROAD NO.	COUNTY	COUNTY PROJECT No
CR 865	LEE	CN160002

SHEET TITLE: SUPERSTRUCTURE DETAILS (5 OF 9)

REF. DWG. NO.

PROJECT NAME: ESTERO BLVD. (CR 865) OVER BIG CARLOS PASS

SHEET NO. B1-107

BEARING PLATE DATA TABLE - TYPE 2

Table Date 7-01-13

GENERAL BEARING PLATE DATA							BEVELED PLATE REQUIRED (Yes/No)	BEVELED PLATE DIMENSIONS (PLATE B) (inches)		
BRG. PLATE MARK **	SPAN NO(s).	BEAM NO(s).	PAD TYPE	BEAM END	PLAN VIEW CASE	SLOPE (%) *		C	X	Y
1-1	1	1-9	F	1	1	5.0	YES	12"	1 1/8"	0 1/2"
1-2	1	1-9	F	2	1	5.0	YES	12"	0 1/2"	1 1/8"
2-1	2	1-8	F	1	1	5.0	YES	12"	1 1/8"	0 1/2"
2-2	2	1-8	F	2	1	5.0	YES	12"	0 1/2"	1 1/8"
3-1	3	1-8	F	1	1	5.0	YES	12"	1 1/8"	0 1/2"
3-2	3	1-8	F	2	1	5.0	YES	12"	0 1/2"	1 1/8"
4-1	4	1-8	F	1	1	5.0	YES	12"	1 1/8"	0 1/2"
4-2	4	1-8	F	2	1	5.0	YES	12"	0 1/2"	1 1/8"
5-1	5	1-8	F	1	1	5.0	YES	12"	1 1/8"	0 1/2"
5-2	5	1-8	F	2	1	5.0	YES	12"	0 1/2"	1 1/8"
6-1	6	1-8	F	1	1	3.8	YES	12"	0 15/16"	0 1/2"
6-2	6	1-8	F	2	1	3.8	YES	12"	0 1/2"	0 15/16"
7-1	7	1-8	F	1	1	1.5	NO	N/A	N/A	N/A
7-2	7	1-8	F	2	1	1.5	NO	N/A	N/A	N/A
8-1	8	1-8	F	1	1	-0.8	NO	N/A	N/A	N/A
8-2	8	1-8	F	2	1	-0.8	NO	N/A	N/A	N/A
9-1	9	1-8	F	1	1	-3.1	YES	12"	0 1/2"	0 7/8"
9-2	9	1-8	F	2	1	-3.1	YES	12"	0 7/8"	0 1/2"
10-1	10	1-8	F	1	1	-4.9	YES	12"	0 1/2"	1 1/16"
10-2	10	1-8	F	2	1	-4.9	YES	12"	1 1/16"	0 1/2"
11-1	11	1-8	F	1	1	-5.0	YES	12"	0 1/2"	1 1/8"
11-2	11	1-8	F	2	1	-5.0	YES	12"	1 1/8"	0 1/2"
12-1	12	1-8	F	1	1	-5.0	YES	12"	0 1/2"	1 1/8"
12-2	12	1-8	F	2	1	-5.0	YES	12"	1 1/8"	0 1/2"
13-1	13	1-8	F	1	1	-5.0	YES	12"	0 1/2"	1 1/8"
13-2	13	1-8	F	2	1	-5.0	YES	12"	1 1/8"	0 1/2"
14-1	14	1-8	F	1	1	-5.0	YES	12"	0 1/2"	1 1/8"
14-2	14	1-8	F	2	1	-5.0	YES	12"	1 1/8"	0 1/2"

NOTES:
See Index 450-512 for additional notes and details.
Embedded Bearing Plate A dimensions are ½" x 1'-1½" x 3'-0" for Florida-I Beams or ½" x 1'-1½" x 1'-4" for AASHTO Type II Beams.
* Slope measured along ℄ of Beam at ℄ of Bearing.
** See "TABLE OF BEAM VARIABLES" and Index 450-010 for Florida-I Beams or Index 450-120 for AASHTO Type II Beams.

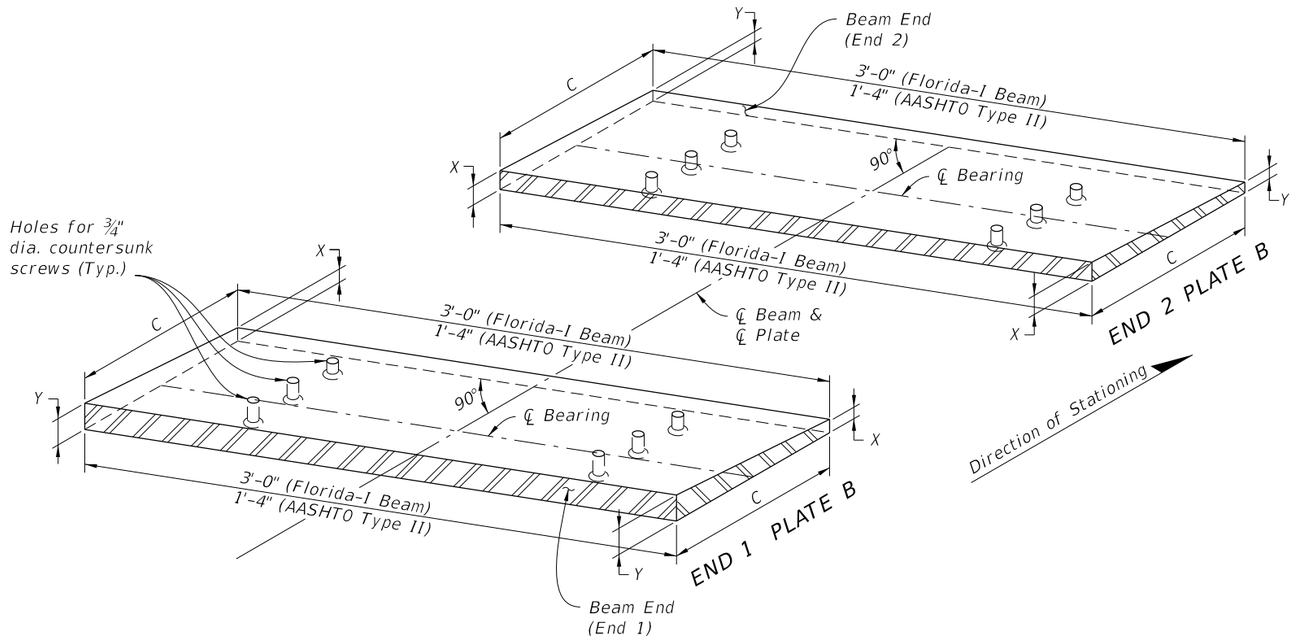

ISOMETRIC VIEW OF BEVELED BEARING PLATES (TYPE 2) FOR FLORIDA I-BEAMS (AASHTO TYPE II BEAMS SIMILAR)

BRIDGE NO. 124143

NOTICE: THE OFFICIAL RECORD OF THIS SHEET IS THE ELECTRONIC FILE DIGITALLY SIGNED AND SEALED UNDER RULE 61G15-23.004, F.A.C.

REVISIONS					
DATE	BY	DESCRIPTION	DATE	BY	DESCRIPTION

Kisinger Campo & Associates Corp.
201 N. Franklin Street
Suite 400
Tampa, FL 33602
Alfredo Jose Layrisse, PE No. 75610

DRAWN BY:	DAA 11-19
CHECKED BY:	KL 04-21
DESIGNED BY:	DAA 11-19
CHECKED BY:	SKB 12-19

LEE COUNTY PUBLIC WORKS
DEPARTMENT OF TRANSPORTATION

ROAD NO.	COUNTY	COUNTY PROJECT No
CR 865	LEE	CN160002

SHEET TITLE: SUPERSTRUCTURE DETAILS (6 OF 9)

REF. DWG. NO.:

PROJECT NAME: ESTERO BLVD. (CR 865) OVER BIG CARLOS PASS

SHEET NO.: B1-108

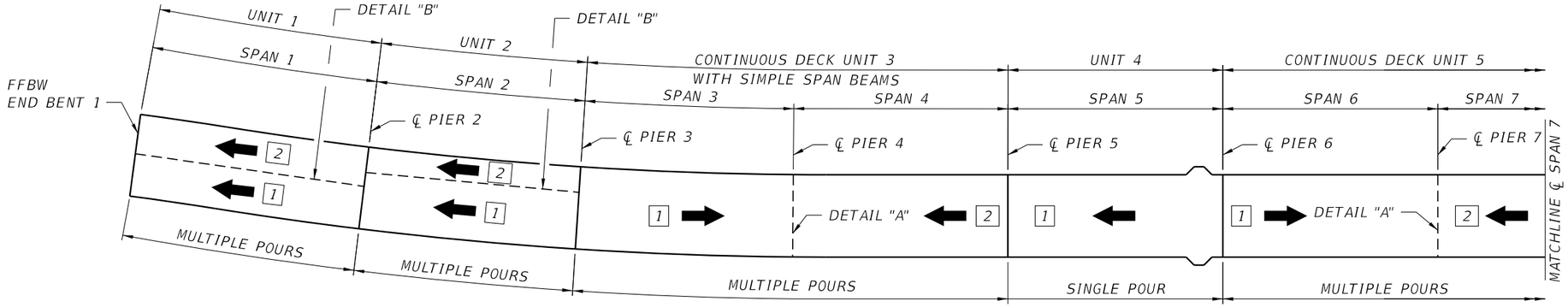

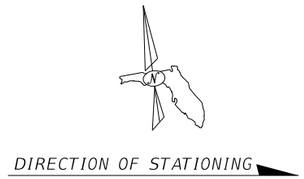

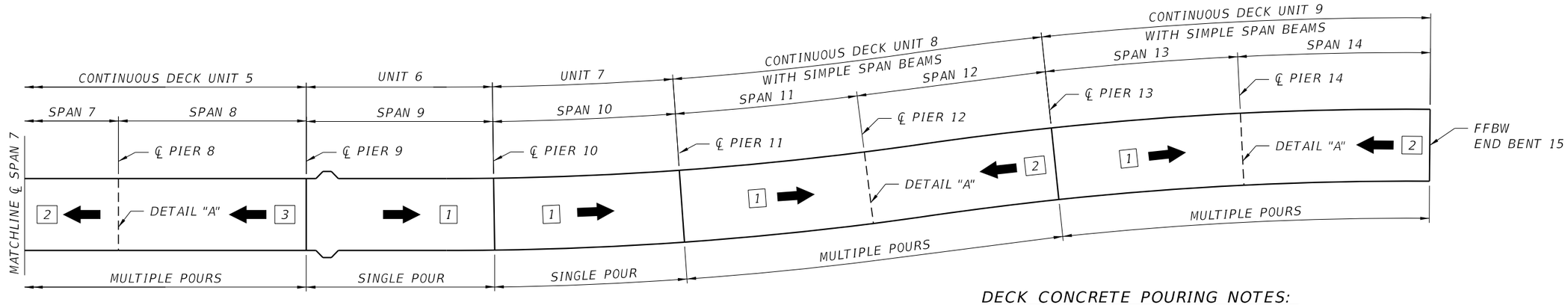

DECK CONCRETE POURING SEQUENCE

DECK CONCRETE POURING NOTES:

1. LEGEND:

   ⬅ [#] DENOTES POURING SEQUENCE AND DIRECTION.

2. ANY CHANGE TO DECK CASTING SEQUENCE SHALL BE SUBMITTED TO THE ENGINEER OF RECORD FOR APPROVAL.

3. WORK THIS SHEET WITH CONSTRUCTION SEQUENCE SHEETS TO COMPLETE POURING SEQUENCE 2 FOR SPANS 1 AND 2.

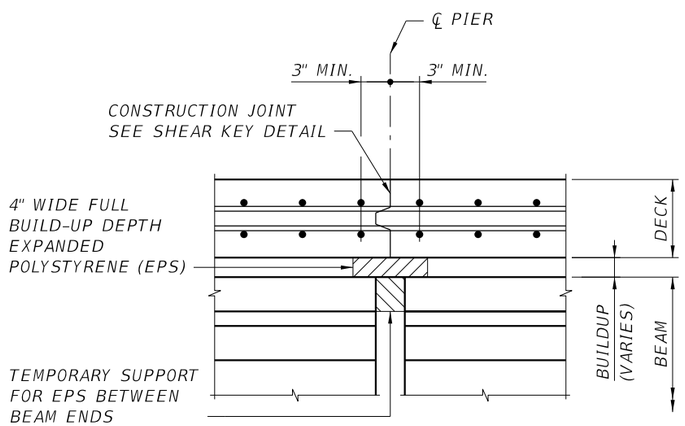

DETAIL "A"

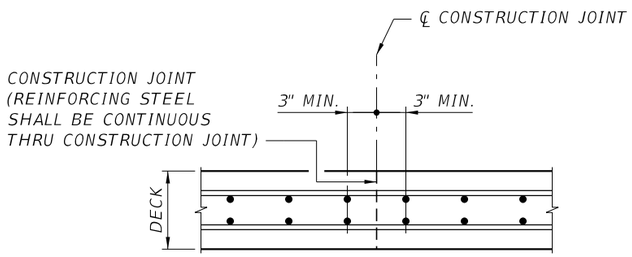

DETAIL "B"

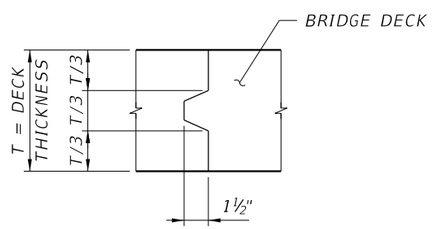

SHEAR KEY DETAIL

DECK CONSTRUCTION JOINTS

BRIDGE NO. 124143

REVISIONS					
DATE	BY	DESCRIPTION	DATE	BY	DESCRIPTION

Kisinger Campo & Associates Corp.
201 N. Franklin Street
Suite 400
Tampa, FL 33602
Alfredo Jose Layrisse, PE No. 75610

DRAWN BY:	CHECKED BY:	DESIGNED BY:	CHECKED BY:
DAA 11-19	KL 04-21	DAA 11-19	SKB 12-19

LEE COUNTY PUBLIC WORKS
DEPARTMENT OF TRANSPORTATION

ROAD NO.	COUNTY	COUNTY PROJECT No
CR 865	LEE	CN160002

SHEET TITLE: SUPERSTRUCTURE DETAILS (7 OF 9)

REF. DWG. NO.:

PROJECT NAME: ESTERO BLVD. (CR 865) OVER BIG CARLOS PASS

SHEET NO.: B1-109

NOTICE: THE OFFICIAL RECORD OF THIS SHEET IS THE ELECTRONIC FILE DIGITALLY SIGNED AND SEALED UNDER RULE 61G15-23.004, F.A.C.

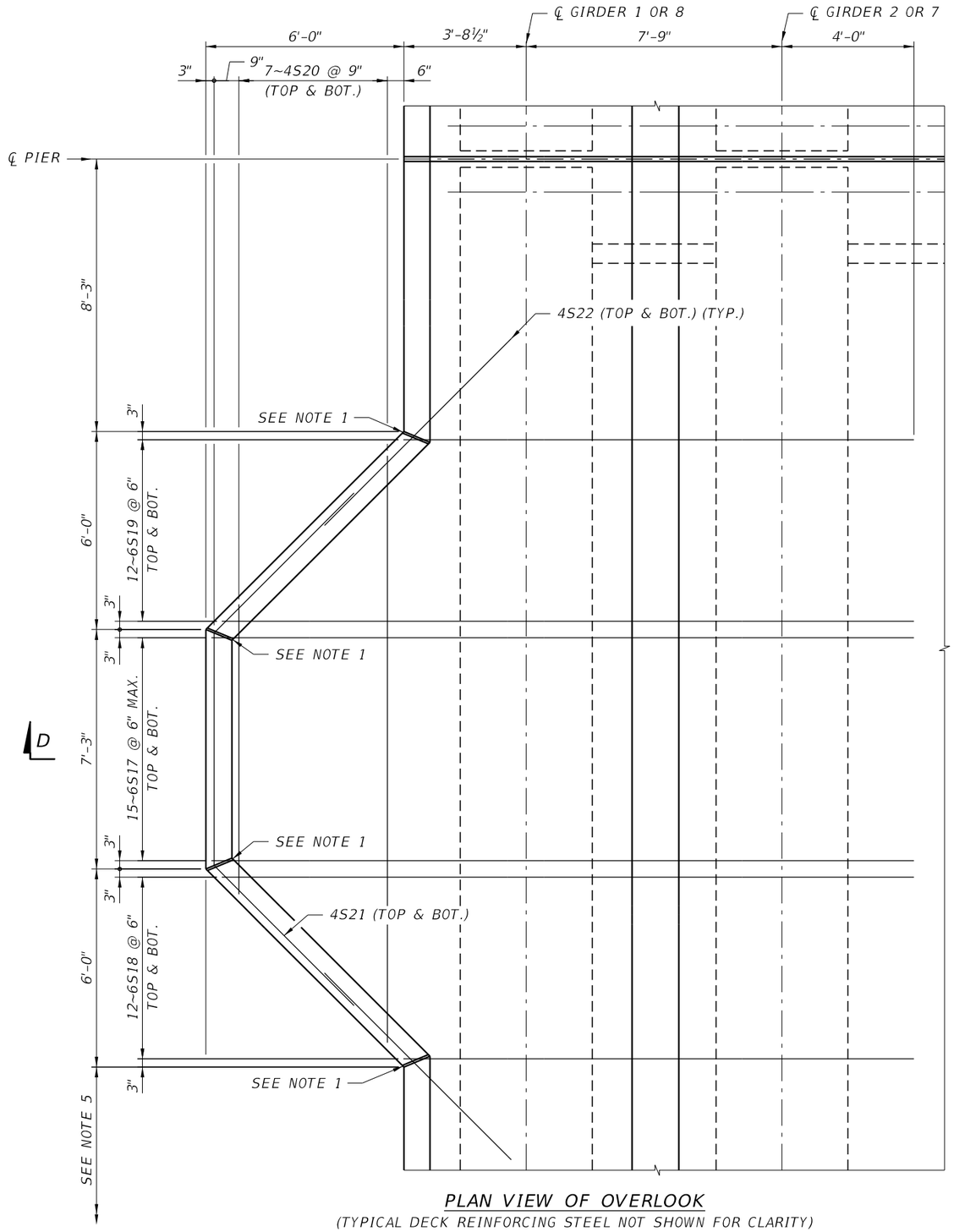

PLAN VIEW OF OVERLOOK

(TYPICAL DECK REINFORCING STEEL NOT SHOWN FOR CLARITY)

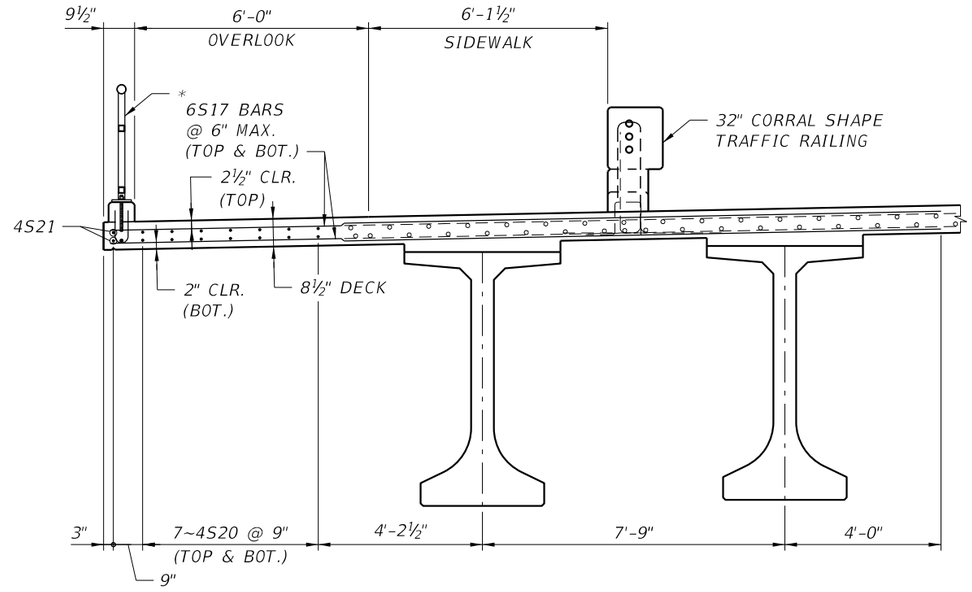

SECTION D-D

(SHOWING OVERLOOK TO THE LEFT OF THE ALIGNMENT, SIMILAR TO THE RIGHT OF THE ALIGNMENT)

* 42" BRIDGE PEDESTRIAN/BICYCLE RAILING (ALUMINUM), SCHEME 2, INDEX 515-061

NOTES:

1. ¾" OPEN JOINT REQUIRED. SEE INDEX 515-061 FOR CURB REINFORCING DETAILS.
2. FOR LOCATION OF OVERLOOKS, SEE PLAN AND ELEVATION SHEETS AND SUPERSTRUCTURE PLAN SHEETS.
3. BARS 4S22 MAY BE SHIFTED TO AVOID CONFLICT WITH TYPICAL DECK REINFORCING STEEL.
4. ALL REQUIRED REBAR LAP SPLICES SHALL BE A MINIMUM OF 1'-4" FOR NO. 4 BARS.
5. SPACING TO ½" V-GROOVE IN CURB VARIES PER SPAN. SEE SUPERSTRUCTURE PLAN SHEETS.
6. OVERLOOK SHALL BE CAST MONOLITHIC WITH SLAB.

BRIDGE NO. 124143

NOTICE: THE OFFICIAL RECORD OF THIS SHEET IS THE ELECTRONIC FILE DIGITALLY SIGNED AND SEALED UNDER RULE 61G15-23.004, F.A.C.

REVISIONS

DATE	BY	DESCRIPTION	DATE	BY	DESCRIPTION

Kisinger Campo & Associates Corp.
201 N. Franklin Street
Suite 400
Tampa, FL 33602
Alfredo Jose Layrisse, PE No. 75610

DRAWN BY:	DAA 4-21
CHECKED BY:	KL 04-21
DESIGNED BY:	TGL 02-20
CHECKED BY:	SKB 09-21

LEE COUNTY PUBLIC WORKS
DEPARTMENT OF TRANSPORTATION

ROAD NO.	COUNTY	COUNTY PROJECT No
CR 865	LEE	CN160002

SHEET TITLE: SUPERSTRUCTURE DETAILS (8 OF 9)

REF. DWG. NO.:

PROJECT NAME: ESTERO BLVD. (CR 865) OVER BIG CARLOS PASS

SHEET NO.: B1-110

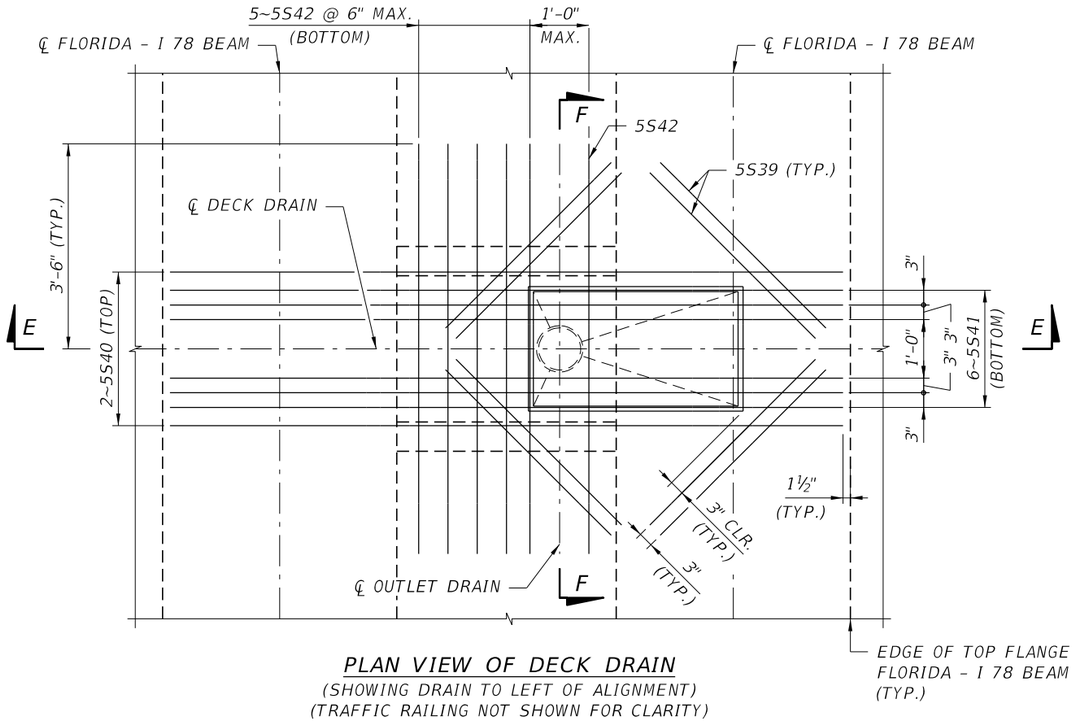

PLAN VIEW OF DECK DRAIN

(SHOWING DRAIN TO LEFT OF ALIGNMENT)
(TRAFFIC RAILING NOT SHOWN FOR CLARITY)
(TYPICAL DECK REINFORCING STEEL NOT SHOWN FOR CLARITY)

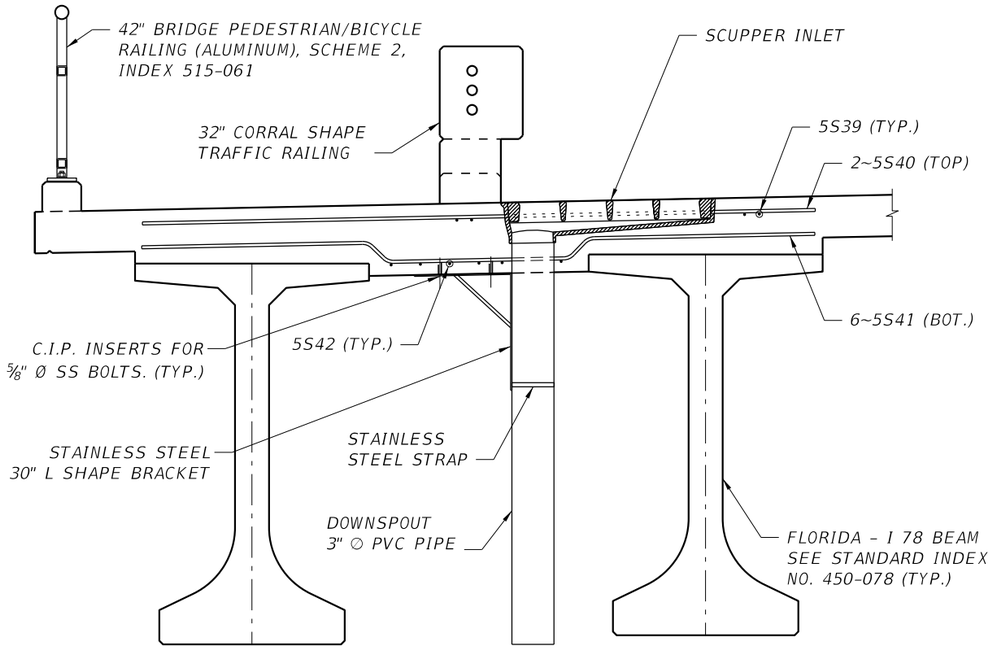

SECTION E-E

(SHOWING DRAIN TO LEFT OF ALIGNMENT)
(TYPICAL DECK REINFORCING STEEL NOT SHOWN FOR CLARITY)

NOTES:

1. FOR DECK DRAIN LOCATIONS, SEE SUPERSTRUCTURE PLAN SHEETS.
2. ORIENT DECK DRAIN PERPENDICULAR TO TRAFFIC RAILING.
3. CUT INTERFERING LONGITUDINAL AND TRANSVERSE DECK BARS TO CLEAR DRAIN WHERE SHIFTING OF BARS IS NOT FEASIBLE. PROVIDE 2" CLR. MIN.
4. PROVIDE BLOCKOUT IN THE STAY-IN-PLACE FORM FOR THE DECK DRAIN AND DRAIN PIPE.
5. BARS 5S42 MAY BE SHIFTED TO AVOID CONFLICT WITH DRAIN PIPE.
6. L BRACKET, STRAP, AND ⅝" BOLTS AND INSERTS TO BE A316 STAINLESS STEEL.
7. C.I.P. INSERTS, BOLTS, AND L SHAPE BRACKET TO BE ELECTRICALLY INSULATED FROM CONTACT WITH CARBON STEEL AND SIP
8. COST OF DOWNSPOUT PIPE, L SHAPE BRACKET, AND HARDWARE TO BE INCIDENTAL TO THE COST OF THE SCUPPER.

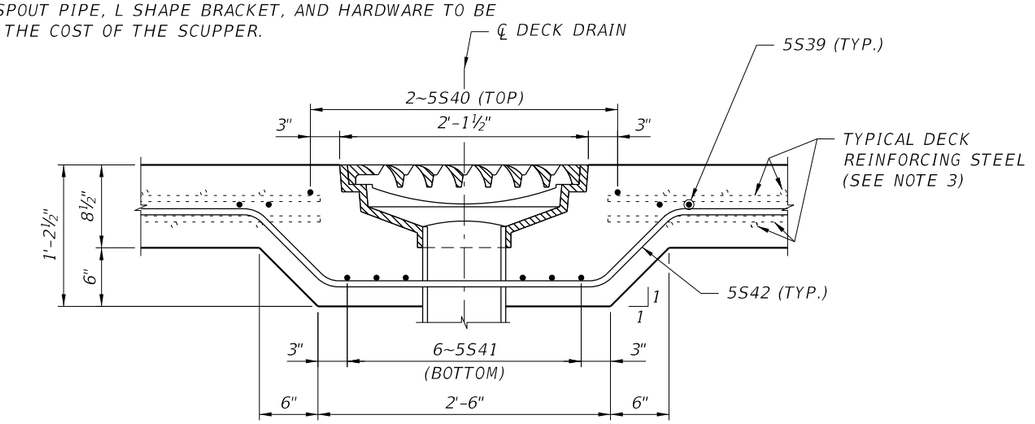

SECTION F-F

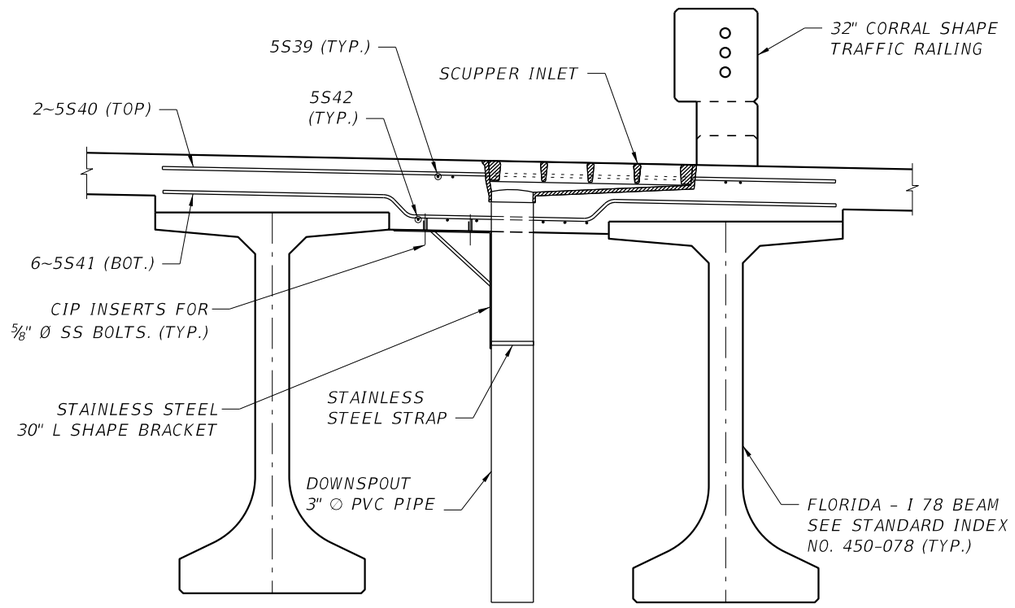

SECTION E-E

(SHOWING DRAIN TO RIGHT OF ALIGNMENT)
(TYPICAL DECK REINFORCING STEEL NOT SHOWN FOR CLARITY)

BRIDGE NO. 124143

NOTICE: THE OFFICIAL RECORD OF THIS SHEET IS THE ELECTRONIC FILE DIGITALLY SIGNED AND SEALED UNDER RULE 61G15-23.004, F.A.C.

REVISIONS					
DATE	BY	DESCRIPTION	DATE	BY	DESCRIPTION

Kisinger Campo & Associates Corp.
201 N. Franklin Street
Suite 400
Tampa, FL 33602
Alfredo Jose Layrisse, PE No. 75610

DRAWN BY:	CHECKED BY:	DESIGNED BY:	CHECKED BY:
DAA 04-21	KL 04-21	TGL 04-21	SKB 04-21

LEE COUNTY PUBLIC WORKS
DEPARTMENT OF TRANSPORTATION

ROAD NO.	COUNTY	COUNTY PROJECT No
CR 865	LEE	CN160002

SHEET TITLE: SUPERSTRUCTURE DETAILS (9 OF 9)

REF. DWG. NO.:

PROJECT NAME: ESTERO BLVD. (CR 865) OVER BIG CARLOS PASS

SHEET NO.: B1-111

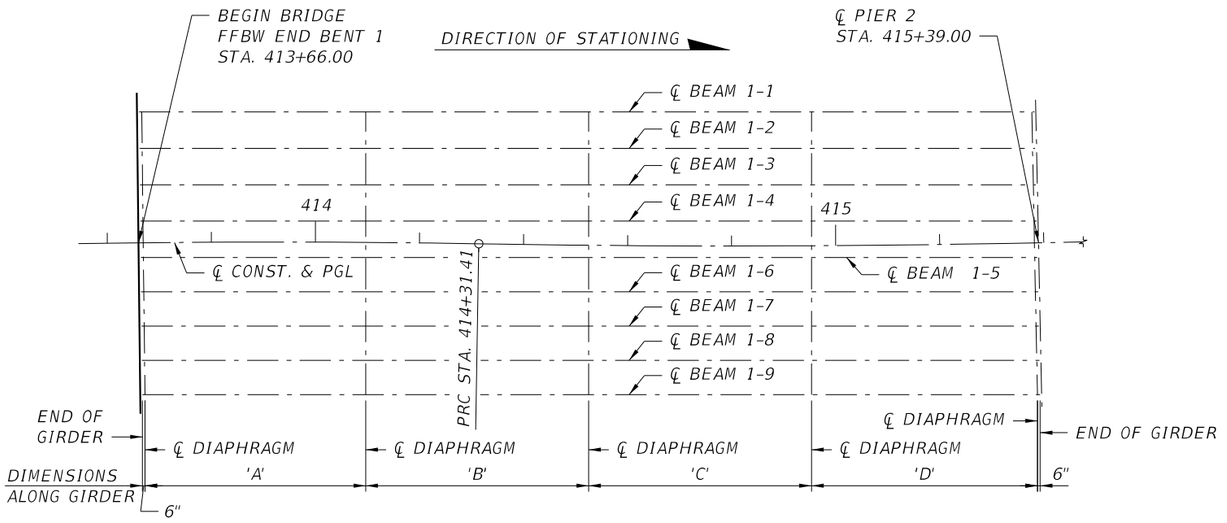

SPAN 1

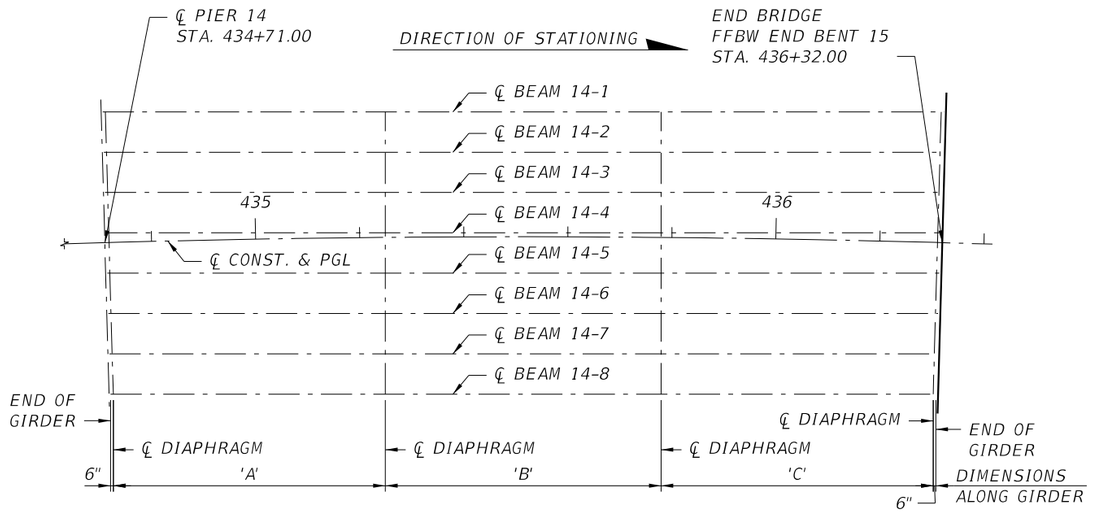

SPAN 14

SPAN 1 DIAPHRAGMS				
BEAM	'A'	'B'	'C'	'D'
1-1	43'-2⅛"	42'-11⅜"	42'-11⅜"	42'-5½"
1-2	43'-1⅛"	42'-11⅜"	42'-11⅜"	42'-7¼"
1-3	43'-0⅛"	42'-11⅜"	42'-11⅜"	42'-9"
1-4	42'-11¼"	42'-11⅜"	42'-11⅜"	42'-10¾"
1-5	42'-10¼"	42'-11⅜"	42'-11⅜"	43'-0⅜"
1-6	42'-9⅜"	42'-11⅜"	42'-11⅜"	43'-2"
1-7	42'-8⅜"	42'-11⅜"	42'-11⅜"	43'-3⅝"
1-8	42'-7½"	42'-11⅜"	42'-11⅜"	43'-5¼"
1-9	42'-6⅝"	42'-11⅜"	42'-11⅜"	43'-6⅞"

NOTE:
DIMENSIONS A, B, C AND D INCLUDE BEAM GRADE.

SPAN 14 DIAPHRAGMS			
BEAM	'A'	'B'	'C'
14-1	53'-11⅞"	53'-1⅞"	53'-11⅞"
14-2	53'-9¼"	53'-1⅞"	53'-9¼"
14-3	53'-6⅝"	53'-1⅞"	53'-6⅝"
14-4	53'-4"	53'-1⅞"	53'-4"
14-5	53'-1⅜"	53'-1⅞"	53'-1⅜"
14-6	52'-10¾"	53'-1⅞"	52'-10¾"
14-7	52'-8⅛"	53'-1⅞"	52'-8⅛"
14-8	52'-5½"	53'-1⅞"	52'-5½"

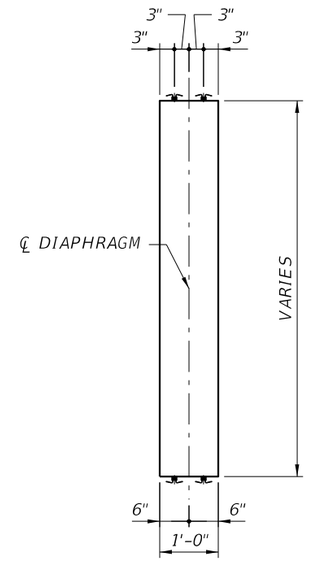

DIAPHRAGM PLAN VIEW

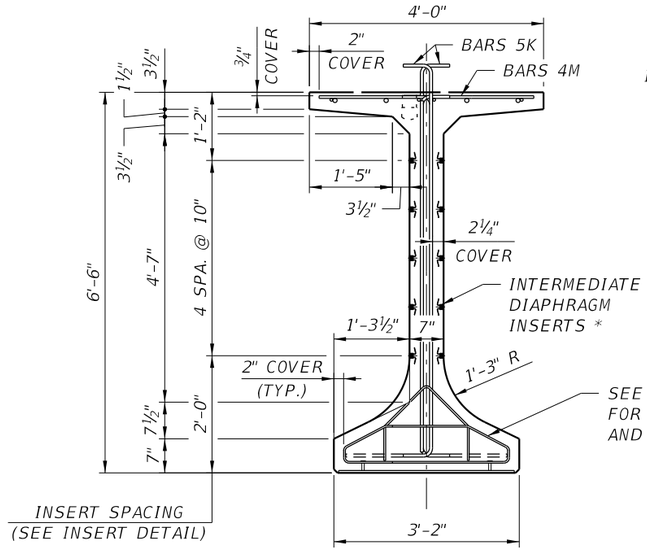

DIAPHRAGM INSERT SPACING

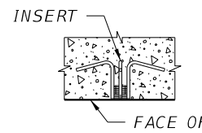

INSERT DETAIL

* FOR EXTERIOR GIRDERS, PUT INSERTS ONLY IN THE INSIDE FACE.

BRIDGE NO. 124143

NOTICE: THE OFFICIAL RECORD OF THIS SHEET IS THE ELECTRONIC FILE DIGITALLY SIGNED AND SEALED UNDER RULE 61G15-23.004, F.A.C.

REVISIONS

DATE	BY	DESCRIPTION	DATE	BY	DESCRIPTION

Kisinger Campo & Associates Corp.
201 N. Franklin Street
Suite 400
Tampa, FL 33602
Alfredo Jose Layrisse, PE No. 75610

DRAWN BY: JBH 08-21
CHECKED BY: AJL 08-21
DESIGNED BY: TJL 08-21
CHECKED BY: HSH 08-21

LEE COUNTY PUBLIC WORKS
DEPARTMENT OF TRANSPORTATION

ROAD NO.	COUNTY	COUNTY PROJECT No
CR 865	LEE	CN160002

SHEET TITLE: DIAPHRAGM DETAILS (1 OF 2)

REF. DWG. NO.

PROJECT NAME: ESTERO BLVD. (CR 865) OVER BIG CARLOS PASS

SHEET NO. B1-112

jhanna 2/24/2022 3:21:22 PM c:\pwworkingdir\kca-pw.bentley.com_kca-pw-01\josh hanna\dms00783\B1DiaphragmConcDet0

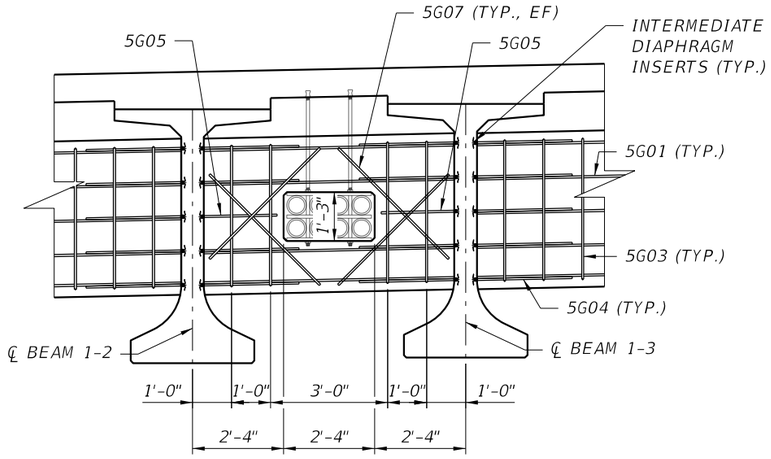

SPAN 1
BAY 1-2

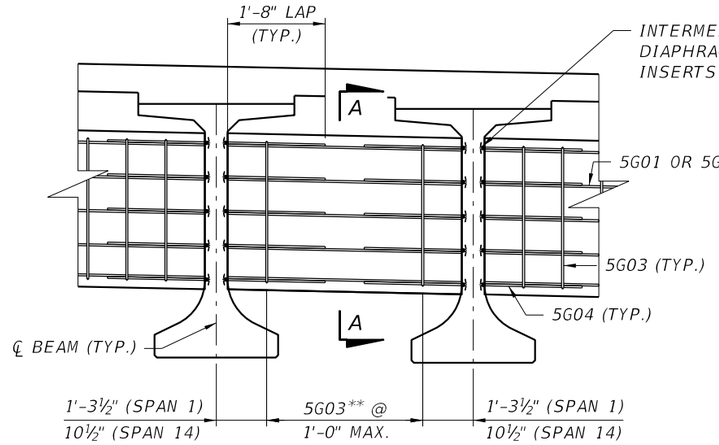

SPAN 1 & 14

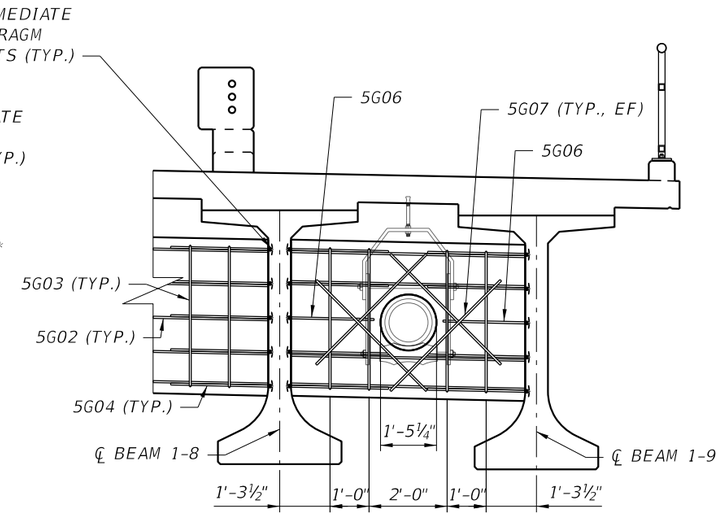

SPAN 1
BAY 1-8

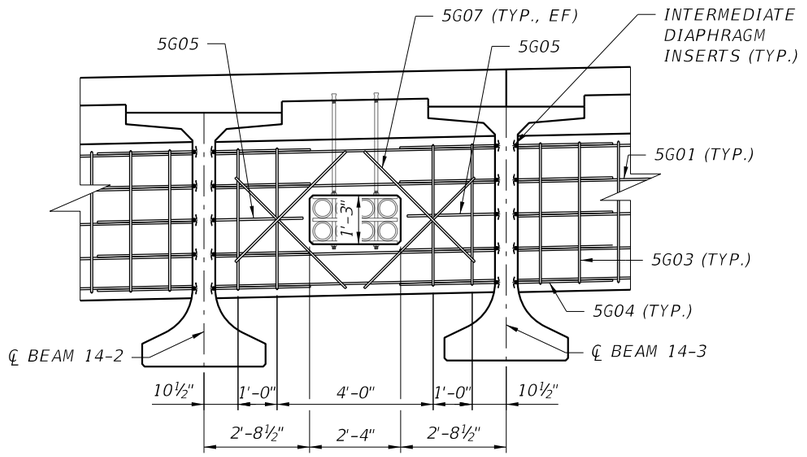

SPAN 14
BAY 14-2

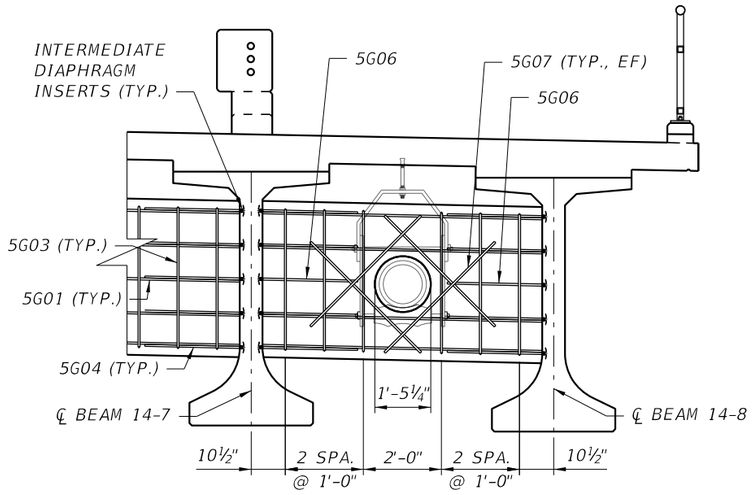

SPAN 14
BAY 14-7

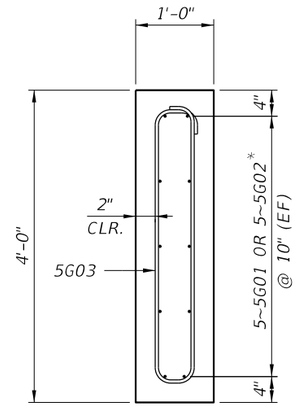

SECTION A-A

NOTE:

VERIFY LOCATION AND DIMENSIONS OF WATER MAIN PIPE AND UTILITY TRAY PRIOR TO CONSTRUCTION TO ADJUST HOLES DIMENSIONS IN DIAPHRAGM. NOTIFY THE EOR OF ADJUSTMENTS GREATER THAN 3".

* 5G01 (BAYS 1-1, 1-3, 1-4, 14-1, 14-3 THRU 14-6), 5G02 (BAYS 1-5 THRU 1-7)

** 6-5G03 FOR BAYS 1-1, 1-3 & 1-4, 5-5G03 FOR BAYS 1-5 THRU 1-7 AND 7-5G03 FOR SPAN 14.

BRIDGE NO. 124143

NOTICE: THE OFFICIAL RECORD OF THIS SHEET IS THE ELECTRONIC FILE DIGITALLY SIGNED AND SEALED UNDER RULE 61G15-23.004, F.A.C.

REVISIONS					
DATE	BY	DESCRIPTION	DATE	BY	DESCRIPTION

Kisinger Campo & Associates Corp.
201 N. Franklin Street
Suite 400
Tampa, FL 33602
Alfredo Jose Layrisse, PE No. 75610

DRAWN BY:	JBH 09-21
CHECKED BY:	AJL 09-21
DESIGNED BY:	AJL 09-21
CHECKED BY:	HSH 09-21

LEE COUNTY PUBLIC WORKS
DEPARTMENT OF TRANSPORTATION

ROAD NO.	COUNTY	COUNTY PROJECT No
CR 865	LEE	CN160002

SHEET TITLE: DIAPHRAGM DETAILS (2 OF 2)

REF. DWG. NO.:

PROJECT NAME: ESTERO BLVD. (CR 865) OVER BIG CARLOS PASS

SHEET NO.: B1-113

FLORIDA-I BEAM - TABLE OF BEAM VARIABLES

Table Date 01-01-16

LOCATION		BEAM TYPE	CONCRETE PROPERTIES			STND. PTRN. TYPE	END ELEV. COND.	PLAN VIEW CASE		BRG. PLATE MARK ***		END OF BEAM & BEARING DIMENSIONS **					BEAM DIMENSIONS *		REINFORCING STEEL														
SPAN NO.	BEAM NO.		CLASS	STRENGTHS (psi)				END 1	END 2	END 1	END 2	ANGLE Ø		DIM P	DIM J	DIM K1	DIM K2		3C1	3C2	3D1		3D2		3D3	4M1	4M2	4M3	5K	NO. OF SPACES BARS 5K				SP. BARS 5K *
				28 Day	Release							END 1	END 2					DIM L	DIM R	C	C	A	B	A	B	NO.	D	D	NO.	NO.	S1	S2	S3	S4	V1
1	1-1	78	VI	8500	6800	1	2	1	1	1-1	1-2	90°	90°	3⅞"	9"	1'-1½"	1'-0"	172'-6½"	2¼"	1'-5½"	1'-5½"	8½"	1'-3"	8½"	1'-3"	204	3'-8"	3'-8"	154	254	28	28	26	11	6"
1	1-2	78	VI	8500	6800	1	2	1	1	1-1	1-2	90°	90°	3⅞"	9"	1'-1½"	1'-0"	172'-7¼"	2¼"	1'-5½"	1'-5½"	8½"	1'-3"	8½"	1'-3"	204	3'-8"	3'-8"	154	254	28	28	26	11	6"
1	1-3	78	VI	8500	6800	1	2	1	1	1-1	1-2	90°	90°	3⅞"	9"	1'-1½"	1'-0"	172'-8"	2¼"	1'-5½"	1'-5½"	8½"	1'-3"	8½"	1'-3"	204	3'-8"	3'-8"	154	254	28	28	26	11	6"
1	1-4	78	VI	8500	6800	1	2	1	1	1-1	1-2	90°	90°	3⅞"	9"	1'-1½"	1'-0"	172'-8¾"	2¼"	1'-5½"	1'-5½"	8½"	1'-3"	8½"	1'-3"	204	3'-8"	3'-8"	154	254	28	28	26	11	6"
1	1-5	78	VI	8500	6800	1	2	1	1	1-1	1-2	90°	90°	3⅞"	9"	1'-1½"	1'-0"	172'-9½"	2¼"	1'-5½"	1'-5½"	8½"	1'-3"	8½"	1'-3"	204	3'-8"	3'-8"	154	254	28	28	26	11	6"
1	1-6	78	VI	8500	6800	1	2	1	1	1-1	1-2	90°	90°	3⅞"	9"	1'-1½"	1'-0"	172'-10¼"	2¼"	1'-5½"	1'-5½"	8½"	1'-3"	8½"	1'-3"	206	3'-8"	3'-8"	154	254	28	28	26	11	6"
1	1-7	78	VI	8500	6800	1	2	1	1	1-1	1-2	90°	90°	3⅞"	9"	1'-1½"	1'-0"	172'-10⅞"	2¼"	1'-5½"	1'-5½"	8½"	1'-3"	8½"	1'-3"	206	3'-8"	3'-8"	154	254	28	28	26	11	6"
1	1-8	78	VI	8500	6800	1	2	1	1	1-1	1-2	90°	90°	3⅞"	9"	1'-1½"	1'-0"	172'-11⅝"	2¼"	1'-5½"	1'-5½"	8½"	1'-3"	8½"	1'-3"	206	3'-8"	3'-8"	155	254	28	28	26	11	6"
1	1-9	78	VI	8500	6800	1	2	1	1	1-1	1-2	90°	90°	3⅞"	9"	1'-1½"	1'-0"	173'-0⅜"	2¼"	1'-5½"	1'-5½"	8½"	1'-3"	8½"	1'-3"	206	3'-8"	3'-8"	155	254	28	28	26	11	6"
2	2-1	78	VI	8500	6800	2	2	1	1	2-1	2-2	90°	90°	3⅞"	9"	1'-0"	1'-0"	159'-5¼"	2"	1'-5½"	1'-5½"	8½"	1'-3"	8½"	1'-3"	188	3'-8"	3'-8"	141	246	28	28	27	6	6"
2	2-2	78	VI	8500	6800	2	2	1	1	2-1	2-2	90°	90°	3⅞"	9"	1'-0"	1'-0"	159'-10⅜"	2"	1'-5½"	1'-5½"	8½"	1'-3"	8½"	1'-3"	188	3'-8"	3'-8"	141	246	28	28	27	6	6"
2	2-3	78	VI	8500	6800	2	2	1	1	2-1	2-2	90°	90°	3⅞"	9"	1'-0"	1'-0"	160'-3⅝"	2"	1'-5½"	1'-5½"	8½"	1'-3"	8½"	1'-3"	188	3'-8"	3'-8"	142	246	28	28	27	6	6"
2	2-4	78	VI	8500	6800	2	2	1	1	2-1	2-2	90°	90°	3⅞"	9"	1'-0"	1'-0"	160'-8⅞"	2"	1'-5½"	1'-5½"	8½"	1'-3"	8½"	1'-3"	188	3'-8"	3'-8"	142	246	28	28	26	7	6"
2	2-5	78	VI	8500	6800	2	2	1	1	2-1	2-2	90°	90°	3⅞"	9"	1'-0"	1'-0"	161'-2⅛"	2"	1'-5½"	1'-5½"	8½"	1'-3"	8½"	1'-3"	190	3'-8"	3'-8"	143	246	28	28	26	7	6"
2	2-6	78	VI	8500	6800	2	2	1	1	2-1	2-2	90°	90°	3⅞"	9"	1'-0"	1'-0"	161'-7⅜"	2"	1'-5½"	1'-5½"	8½"	1'-3"	8½"	1'-3"	190	3'-8"	3'-8"	143	246	28	28	26	7	6"
2	2-7	78	VI	8500	6800	2	2	1	1	2-1	2-2	90°	90°	3⅞"	9"	1'-0"	1'-0"	162'-0½"	2"	1'-5½"	1'-5½"	8½"	1'-3"	8½"	1'-3"	190	3'-8"	3'-8"	144	246	28	28	25	8	6"
2	2-8	78	VI	8500	6800	2	2	1	1	2-1	2-2	90°	90°	3⅞"	9"	1'-0"	1'-0"	162'-5¾"	2"	1'-5½"	1'-5½"	8½"	1'-3"	8½"	1'-3"	192	3'-8"	3'-8"	144	246	28	28	25	8	6"
3	3-1	78	VI	8500	6800	2	2	1	1	3-1	3-2	90°	90°	3⅞"	9"	1'-0"	1'-0"	159'-5¼"	2"	1'-5½"	1'-5½"	8½"	1'-3"	8½"	1'-3"	188	3'-8"	3'-8"	141	246	28	28	27	6	6"
3	3-2	78	VI	8500	6800	2	2	1	1	3-1	3-2	90°	90°	3⅞"	9"	1'-0"	1'-0"	159'-10⅜"	2"	1'-5½"	1'-5½"	8½"	1'-3"	8½"	1'-3"	188	3'-8"	3'-8"	141	246	28	28	27	6	6"
3	3-3	78	VI	8500	6800	2	2	1	1	3-1	3-2	90°	90°	3⅞"	9"	1'-0"	1'-0"	160'-3⅝"	2"	1'-5½"	1'-5½"	8½"	1'-3"	8½"	1'-3"	188	3'-8"	3'-8"	142	246	28	28	27	6	6"
3	3-4	78	VI	8500	6800	2	2	1	1	3-1	3-2	90°	90°	3⅞"	9"	1'-0"	1'-0"	160'-8⅞"	2"	1'-5½"	1'-5½"	8½"	1'-3"	8½"	1'-3"	188	3'-8"	3'-8"	142	246	28	28	26	7	6"
3	3-5	78	VI	8500	6800	2	2	1	1	3-1	3-2	90°	90°	3⅞"	9"	1'-0"	1'-0"	161'-2⅛"	2"	1'-5½"	1'-5½"	8½"	1'-3"	8½"	1'-3"	190	3'-8"	3'-8"	143	246	28	28	26	7	6"
3	3-6	78	VI	8500	6800	2	2	1	1	3-1	3-2	90°	90°	3⅞"	9"	1'-0"	1'-0"	161'-7⅜"	2"	1'-5½"	1'-5½"	8½"	1'-3"	8½"	1'-3"	190	3'-8"	3'-8"	143	246	28	28	26	7	6"
3	3-7	78	VI	8500	6800	2	2	1	1	3-1	3-2	90°	90°	3⅞"	9"	1'-0"	1'-0"	162'-0½"	2"	1'-5½"	1'-5½"	8½"	1'-3"	8½"	1'-3"	190	3'-8"	3'-8"	144	246	28	28	25	8	6"
3	3-8	78	VI	8500	6800	2	2	1	1	3-1	3-2	90°	90°	3⅞"	9"	1'-0"	1'-0"	162'-5¾"	2"	1'-5½"	1'-5½"	8½"	1'-3"	8½"	1'-3"	192	3'-8"	3'-8"	144	246	28	28	25	8	6"

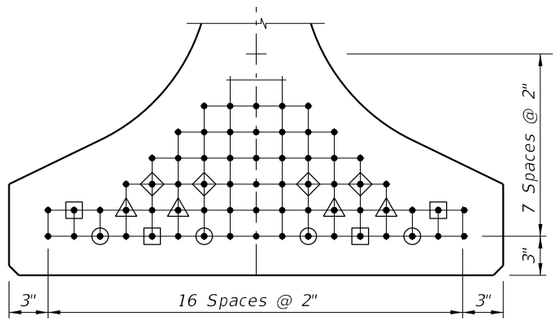

TYPE (1) 66 STRANDS

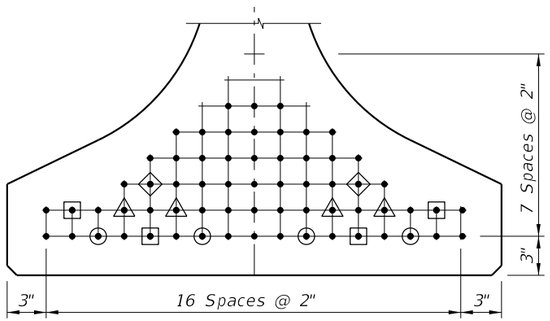

TYPE (2) 64 STRANDS

STRAND DESCRIPTION: Use 0.6" Diameter, Grade 270 Low-Relaxation Carbon Steel Strands stressed at 43.9 kips each. Area per strand equals 0.217 sq. in.

STRAND PATTERNS

STRAND DEBONDING LEGEND

- • – fully bonded strands.
- ⊙ – strands debonded 30'-0" from end of beam.
- ⊡ – strands debonded 20'-0" from end of beam.
- △ – strands debonded 15'-0" from end of beam.
- ◇ – strands debonded 10'-0" from end of beam.

NOTE: On beams with skewed ends, the debonded length shall be measured along the shielded strand.

NOTE: Work this sheet with Standard Plans Index 450-010 and the applicable "Florida-I Beam Standard Details" Index.

DIMENSION NOTES

* All longitudinal beam dimensions shown on this sheet with a single asterisk (*) are measured along the centerline of beam. Dimension "R" is calculated at mid-height of the beam.

** End beam bearing dimensions "J" and "K" are measured perpendicular to ℄ Bearing along the bottom of the beam.

BEARING PLATES

*** See the Bearing Plate Data Table for details.

BRIDGE NO. 124143

REVISIONS					
DATE	BY	DESCRIPTION	DATE	BY	DESCRIPTION

Kisinger Campo & Associates Corp.
201 N. Franklin Street
Suite 400
Tampa, FL 33602
Alfredo Jose Layrisse, PE No. 75610

DRAWN BY:	CHECKED BY:	DESIGNED BY:	CHECKED BY:
DAA 12-19	KL 04-21	DAA 11-19	SKB 12-19

LEE COUNTY PUBLIC WORKS
DEPARTMENT OF TRANSPORTATION

ROAD NO.	COUNTY	COUNTY PROJECT No
CR 865	LEE	CN160002

SHEET TITLE: BEAM DATA TABLE (1 OF 4)

REF. DWG. NO.:

PROJECT NAME: ESTERO BLVD. (CR 865) OVER BIG CARLOS PASS

SHEET NO.: B1-114

NOTICE: THE OFFICIAL RECORD OF THIS SHEET IS THE ELECTRONIC FILE DIGITALLY SIGNED AND SEALED UNDER RULE 61G15-23.004, F.A.C.

jhanna 2/24/2022 3:21:28 PM c:\pwworkingdir\kca-pw.bentley.com_kca-pw-01\josh hanna\dms00783\B1DataTableBeams01.dgn

FLORIDA-I BEAM - TABLE OF BEAM VARIABLES

Table Date 01-01-16

LOCATION		BEAM TYPE	CONCRETE PROPERTIES			STND. PTRN. TYPE	END ELEV. COND.	PLAN VIEW CASE		BRG. PLATE MARK ***		END OF BEAM & BEARING DIMENSIONS **						BEAM DIMENSIONS *		REINFORCING STEEL															
SPAN NO.	BEAM NO.		CLASS	STRENGTHS (psi)				END 1	END 2	END 1	END 2	ANGLE Ø		DIM P	DIM J	DIM K1	DIM K2			3C1	3C2	3D1		3D2		3D3	4M1	4M2	4M3	5K	NO. OF SPACES BARS 5K				SP. BARS 5K *
				28 Day	Release							END 1	END 2					DIM L	DIM R	C	C	A	B	A	B	NO.	D	D	NO.	NO.	S1	S2	S3	S4	V1
4	4-1	78	VI	8500	6800	2	2	1	1	4-1	4-2	90°	90°	3⅞"	9"	1'-0"	1'-0"	160'-7¾"	2"	1'-5½"	1'-5½"	8½"	1'-3"	8½"	1'-3"	188	3'-8"	3'-8"	142	246	28	28	26	7	6"
4	4-2	78	VI	8500	6800	2	2	1	1	4-1	4-2	90°	90°	3⅞"	9"	1'-0"	1'-0"	160'-8⅝"	2"	1'-5½"	1'-5½"	8½"	1'-3"	8½"	1'-3"	188	3'-8"	3'-8"	142	246	28	28	26	7	6"
4	4-3	78	VI	8500	6800	2	2	1	1	4-1	4-2	90°	90°	3⅞"	9"	1'-0"	1'-0"	160'-9⅜"	2"	1'-5½"	1'-5½"	8½"	1'-3"	8½"	1'-3"	188	3'-8"	3'-8"	142	246	28	28	26	7	6"
4	4-4	78	VI	8500	6800	2	2	1	1	4-1	4-2	90°	90°	3⅞"	9"	1'-0"	1'-0"	160'-10¼"	2"	1'-5½"	1'-5½"	8½"	1'-3"	8½"	1'-3"	190	3'-8"	3'-8"	142	246	28	28	26	7	6"
4	4-5	78	VI	8500	6800	2	2	1	1	4-1	4-2	90°	90°	3⅞"	9"	1'-0"	1'-0"	160'-11"	2"	1'-5½"	1'-5½"	8½"	1'-3"	8½"	1'-3"	190	3'-8"	3'-8"	143	246	28	28	26	7	6"
4	4-6	78	VI	8500	6800	2	2	1	1	4-1	4-2	90°	90°	3⅞"	9"	1'-0"	1'-0"	160'-11¾"	2"	1'-5½"	1'-5½"	8½"	1'-3"	8½"	1'-3"	190	3'-8"	3'-8"	143	246	28	28	26	7	6"
4	4-7	78	VI	8500	6800	2	2	1	1	4-1	4-2	90°	90°	3⅞"	9"	1'-0"	1'-0"	161'-0⅝"	2"	1'-5½"	1'-5½"	8½"	1'-3"	8½"	1'-3"	190	3'-8"	3'-8"	143	246	28	28	26	7	6"
4	4-8	78	VI	8500	6800	2	2	1	1	4-1	4-2	90°	90°	3⅞"	9"	1'-0"	1'-0"	161'-1⅜"	2"	1'-5½"	1'-5½"	8½"	1'-3"	8½"	1'-3"	190	3'-8"	3'-8"	143	246	28	28	26	7	6"
5	5-1	78	VI	8500	6800	2	2	1	1	5-1	5-2	90°	90°	3⅞"	9"	1'-0"	1'-0"	160'-10⅜"	2"	1'-5½"	1'-5½"	8½"	1'-3"	8½"	1'-3"	190	3'-8"	3'-8"	142	246	28	28	26	7	6"
5	5-2	78	VI	8500	6800	2	2	1	1	5-1	5-2	90°	90°	3⅞"	9"	1'-0"	1'-0"	160'-10⅜"	2"	1'-5½"	1'-5½"	8½"	1'-3"	8½"	1'-3"	190	3'-8"	3'-8"	142	246	28	28	26	7	6"
5	5-3	78	VI	8500	6800	2	2	1	1	5-1	5-2	90°	90°	3⅞"	9"	1'-0"	1'-0"	160'-10⅜"	2"	1'-5½"	1'-5½"	8½"	1'-3"	8½"	1'-3"	190	3'-8"	3'-8"	142	246	28	28	26	7	6"
5	5-4	78	VI	8500	6800	2	2	1	1	5-1	5-2	90°	90°	3⅞"	9"	1'-0"	1'-0"	160'-10⅜"	2"	1'-5½"	1'-5½"	8½"	1'-3"	8½"	1'-3"	190	3'-8"	3'-8"	142	246	28	28	26	7	6"
5	5-5	78	VI	8500	6800	2	2	1	1	5-1	5-2	90°	90°	3⅞"	9"	1'-0"	1'-0"	160'-10⅜"	2"	1'-5½"	1'-5½"	8½"	1'-3"	8½"	1'-3"	190	3'-8"	3'-8"	142	246	28	28	26	7	6"
5	5-6	78	VI	8500	6800	2	2	1	1	5-1	5-2	90°	90°	3⅞"	9"	1'-0"	1'-0"	160'-10⅜"	2"	1'-5½"	1'-5½"	8½"	1'-3"	8½"	1'-3"	190	3'-8"	3'-8"	142	246	28	28	26	7	6"
5	5-7	78	VI	8500	6800	2	2	1	1	5-1	5-2	90°	90°	3⅞"	9"	1'-0"	1'-0"	160'-10⅜"	2"	1'-5½"	1'-5½"	8½"	1'-3"	8½"	1'-3"	190	3'-8"	3'-8"	142	246	28	28	26	7	6"
5	5-8	78	VI	8500	6800	2	2	1	1	5-1	5-2	90°	90°	3⅞"	9"	1'-0"	1'-0"	160'-10⅜"	2"	1'-5½"	1'-5½"	8½"	1'-3"	8½"	1'-3"	190	3'-8"	3'-8"	142	246	28	28	26	7	6"
6	6-1	78	VI	8500	6800	2	2	1	1	6-1	6-2	90°	90°	3"	9"	1'-0"	1'-0"	160'-9⅜"	2"	1'-5½"	1'-5½"	8½"	1'-3"	8½"	1'-3"	188	3'-8"	3'-8"	142	246	28	28	26	7	6"
6	6-2	78	VI	8500	6800	2	2	1	1	6-1	6-2	90°	90°	3"	9"	1'-0"	1'-0"	160'-9⅜"	2"	1'-5½"	1'-5½"	8½"	1'-3"	8½"	1'-3"	188	3'-8"	3'-8"	142	246	28	28	26	7	6"
6	6-3	78	VI	8500	6800	2	2	1	1	6-1	6-2	90°	90°	3"	9"	1'-0"	1'-0"	160'-9⅜"	2"	1'-5½"	1'-5½"	8½"	1'-3"	8½"	1'-3"	188	3'-8"	3'-8"	142	246	28	28	26	7	6"
6	6-4	78	VI	8500	6800	2	2	1	1	6-1	6-2	90°	90°	3"	9"	1'-0"	1'-0"	160'-9⅜"	2"	1'-5½"	1'-5½"	8½"	1'-3"	8½"	1'-3"	188	3'-8"	3'-8"	142	246	28	28	26	7	6"
6	6-5	78	VI	8500	6800	2	2	1	1	6-1	6-2	90°	90°	3"	9"	1'-0"	1'-0"	160'-9⅜"	2"	1'-5½"	1'-5½"	8½"	1'-3"	8½"	1'-3"	188	3'-8"	3'-8"	142	246	28	28	26	7	6"
6	6-6	78	VI	8500	6800	2	2	1	1	6-1	6-2	90°	90°	3"	9"	1'-0"	1'-0"	160'-9⅜"	2"	1'-5½"	1'-5½"	8½"	1'-3"	8½"	1'-3"	188	3'-8"	3'-8"	142	246	28	28	26	7	6"
6	6-7	78	VI	8500	6800	2	2	1	1	6-1	6-2	90°	90°	3"	9"	1'-0"	1'-0"	160'-9⅜"	2"	1'-5½"	1'-5½"	8½"	1'-3"	8½"	1'-3"	188	3'-8"	3'-8"	142	246	28	28	26	7	6"
6	6-8	78	VI	8500	6800	2	2	1	1	6-1	6-2	90°	90°	3"	9"	1'-0"	1'-0"	160'-9⅜"	2"	1'-5½"	1'-5½"	8½"	1'-3"	8½"	1'-3"	188	3'-8"	3'-8"	142	246	28	28	26	7	6"
7	7-1	78	VI	8500	6800	2	2	1	1	7-1	7-2	90°	90°	1¼"	9"	1'-0"	1'-0"	160'-8¼"	2"	1'-5½"	1'-5½"	8½"	1'-3"	8½"	1'-3"	188	3'-8"	3'-8"	142	246	28	28	27	6	6"
7	7-2	78	VI	8500	6800	2	2	1	1	7-1	7-2	90°	90°	1¼"	9"	1'-0"	1'-0"	160'-8¼"	2"	1'-5½"	1'-5½"	8½"	1'-3"	8½"	1'-3"	188	3'-8"	3'-8"	142	246	28	28	27	6	6"
7	7-3	78	VI	8500	6800	2	2	1	1	7-1	7-2	90°	90°	1¼"	9"	1'-0"	1'-0"	160'-8¼"	2"	1'-5½"	1'-5½"	8½"	1'-3"	8½"	1'-3"	188	3'-8"	3'-8"	142	246	28	28	27	6	6"
7	7-4	78	VI	8500	6800	2	2	1	1	7-1	7-2	90°	90°	1¼"	9"	1'-0"	1'-0"	160'-8¼"	2"	1'-5½"	1'-5½"	8½"	1'-3"	8½"	1'-3"	188	3'-8"	3'-8"	142	246	28	28	27	6	6"
7	7-5	78	VI	8500	6800	2	2	1	1	7-1	7-2	90°	90°	1¼"	9"	1'-0"	1'-0"	160'-8¼"	2"	1'-5½"	1'-5½"	8½"	1'-3"	8½"	1'-3"	188	3'-8"	3'-8"	142	246	28	28	27	6	6"
7	7-6	78	VI	8500	6800	2	2	1	1	7-1	7-2	90°	90°	1¼"	9"	1'-0"	1'-0"	160'-8¼"	2"	1'-5½"	1'-5½"	8½"	1'-3"	8½"	1'-3"	188	3'-8"	3'-8"	142	246	28	28	27	6	6"
7	7-7	78	VI	8500	6800	2	2	1	1	7-1	7-2	90°	90°	1¼"	9"	1'-0"	1'-0"	160'-8¼"	2"	1'-5½"	1'-5½"	8½"	1'-3"	8½"	1'-3"	188	3'-8"	3'-8"	142	246	28	28	27	6	6"
7	7-8	78	VI	8500	6800	2	2	1	1	7-1	7-2	90°	90°	1¼"	9"	1'-0"	1'-0"	160'-8¼"	2"	1'-5½"	1'-5½"	8½"	1'-3"	8½"	1'-3"	188	3'-8"	3'-8"	142	246	28	28	27	6	6"

DIMENSION NOTES

* All longitudinal beam dimensions shown on this sheet with a single asterisk (*) are measured along the centerline of beam. Dimension "R" is calculated at mid-height of the beam.

** End beam bearing dimensions "J" and "K" are measured perpendicular to ℄ Bearing along the bottom of the beam.

BEARING PLATES

*** See the Bearing Plate Data Table for details.

NOTE: Work this sheet with Standard Plans Index 450-010 and the applicable "Florida-I Beam Standard Details" Index.

BRIDGE NO. 124143

NOTICE: THE OFFICIAL RECORD OF THIS SHEET IS THE ELECTRONIC FILE DIGITALLY SIGNED AND SEALED UNDER RULE 61G15-23.004, F.A.C.

REVISIONS					
DATE	BY	DESCRIPTION	DATE	BY	DESCRIPTION

Kisinger Campo & Associates Corp.
201 N. Franklin Street
Suite 400
Tampa, FL 33602
Alfredo Jose Layrisse, PE No. 75610

DRAWN BY:	DAA 12-19
CHECKED BY:	KL 04-21
DESIGNED BY:	DAA 11-19
CHECKED BY:	SKB 12-19

LEE COUNTY PUBLIC WORKS
DEPARTMENT OF TRANSPORTATION

ROAD NO.	COUNTY	COUNTY PROJECT No
CR 865	LEE	CN160002

SHEET TITLE: BEAM DATA TABLE (2 OF 4)

REF. DWG. NO.:

PROJECT NAME: ESTERO BLVD. (CR 865) OVER BIG CARLOS PASS

SHEET NO.: B1-115

FLORIDA-I BEAM - TABLE OF BEAM VARIABLES

Table Date 01-01-16

LOCATION		BEAM TYPE	CONCRETE PROPERTIES			STND. PTRN. TYPE	END ELEV. COND.	PLAN VIEW CASE		BRG. PLATE MARK ***		END OF BEAM & BEARING DIMENSIONS **						BEAM DIMENSIONS *		REINFORCING STEEL														
SPAN NO.	BEAM NO.		CLASS	STRENGTHS (psi)				END 1	END 2	END 1	END 2	ANGLE Ø		DIM P	DIM J	DIM K1	DIM K2			3C1	3C2	3D1		3D2		3D3	4M1	4M2	4M3	5K	NO. OF SPACES BARS 5K				SP. BARS 5K *
				28 Day	Release							END 1	END 2					DIM L	DIM R	C	C	A	B	A	B	NO.	D	D	NO.	NO.	S1	S2	S3	S4	V1
8	8-1	78	VI	8500	6800	2	1	1	1	8-1	8-2	90°	90°	–	9"	1'-0"	1'-0"	160'-8"	2"	1'-5½"	1'-5½"	8½"	1'-3"	8½"	1'-3"	188	3'-8"	3'-8"	142	246	28	28	27	6	6"
8	8-2	78	VI	8500	6800	2	1	1	1	8-1	8-2	90°	90°	–	9"	1'-0"	1'-0"	160'-8"	2"	1'-5½"	1'-5½"	8½"	1'-3"	8½"	1'-3"	188	3'-8"	3'-8"	142	246	28	28	27	6	6"
8	8-3	78	VI	8500	6800	2	1	1	1	8-1	8-2	90°	90°	–	9"	1'-0"	1'-0"	160'-8"	2"	1'-5½"	1'-5½"	8½"	1'-3"	8½"	1'-3"	188	3'-8"	3'-8"	142	246	28	28	27	6	6"
8	8-4	78	VI	8500	6800	2	1	1	1	8-1	8-2	90°	90°	–	9"	1'-0"	1'-0"	160'-8"	2"	1'-5½"	1'-5½"	8½"	1'-3"	8½"	1'-3"	188	3'-8"	3'-8"	142	246	28	28	27	6	6"
8	8-5	78	VI	8500	6800	2	1	1	1	8-1	8-2	90°	90°	–	9"	1'-0"	1'-0"	160'-8"	2"	1'-5½"	1'-5½"	8½"	1'-3"	8½"	1'-3"	188	3'-8"	3'-8"	142	246	28	28	27	6	6"
8	8-6	78	VI	8500	6800	2	1	1	1	8-1	8-2	90°	90°	–	9"	1'-0"	1'-0"	160'-8"	2"	1'-5½"	1'-5½"	8½"	1'-3"	8½"	1'-3"	188	3'-8"	3'-8"	142	246	28	28	27	6	6"
8	8-7	78	VI	8500	6800	2	1	1	1	8-1	8-2	90°	90°	–	9"	1'-0"	1'-0"	160'-8"	2"	1'-5½"	1'-5½"	8½"	1'-3"	8½"	1'-3"	188	3'-8"	3'-8"	142	246	28	28	27	6	6"
8	8-8	78	VI	8500	6800	2	1	1	1	8-1	8-2	90°	90°	–	9"	1'-0"	1'-0"	160'-8"	2"	1'-5½"	1'-5½"	8½"	1'-3"	8½"	1'-3"	188	3'-8"	3'-8"	142	246	28	28	27	6	6"
9	9-1	78	VI	8500	6800	2	3	1	1	9-1	9-2	90°	90°	2⅜"	9"	1'-0"	1'-0"	160'-4⅝"	2"	1'-5½"	1'-5½"	8½"	1'-3"	8½"	1'-3"	188	3'-8"	3'-8"	142	246	28	28	27	6	6"
9	9-2	78	VI	8500	6800	2	3	1	1	9-1	9-2	90°	90°	2⅜"	9"	1'-0"	1'-0"	160'-5⅞"	2"	1'-5½"	1'-5½"	8½"	1'-3"	8½"	1'-3"	188	3'-8"	3'-8"	142	246	28	28	27	6	6"
9	9-3	78	VI	8500	6800	2	3	1	1	9-1	9-2	90°	90°	2⅜"	9"	1'-0"	1'-0"	160'-7¼"	2"	1'-5½"	1'-5½"	8½"	1'-3"	8½"	1'-3"	188	3'-8"	3'-8"	142	246	28	28	27	6	6"
9	9-4	78	VI	8500	6800	2	3	1	1	9-1	9-2	90°	90°	2⅜"	9"	1'-0"	1'-0"	160'-8⅝"	2"	1'-5½"	1'-5½"	8½"	1'-3"	8½"	1'-3"	188	3'-8"	3'-8"	142	246	28	28	27	6	6"
9	9-5	78	VI	8500	6800	2	3	1	1	9-1	9-2	90°	90°	2⅜"	9"	1'-0"	1'-0"	160'-9⅞"	2"	1'-5½"	1'-5½"	8½"	1'-3"	8½"	1'-3"	188	3'-8"	3'-8"	142	246	28	28	26	7	6"
9	9-6	78	VI	8500	6800	2	3	1	1	9-1	9-2	90°	90°	2⅜"	9"	1'-0"	1'-0"	160'-11¼"	2"	1'-5½"	1'-5½"	8½"	1'-3"	8½"	1'-3"	190	3'-8"	3'-8"	143	246	28	28	26	7	6"
9	9-7	78	VI	8500	6800	2	3	1	1	9-1	9-2	90°	90°	2⅜"	9"	1'-0"	1'-0"	161'-0½"	2"	1'-5½"	1'-5½"	8½"	1'-3"	8½"	1'-3"	190	3'-8"	3'-8"	143	246	28	28	26	7	6"
9	9-8	78	VI	8500	6800	2	3	1	1	9-1	9-2	90°	90°	2⅜"	9"	1'-0"	1'-0"	161'-1⅞"	2"	1'-5½"	1'-5½"	8½"	1'-3"	8½"	1'-3"	190	3'-8"	3'-8"	143	246	28	28	26	7	6"
10	10-1	78	VI	8500	6800	2	3	1	1	10-1	10-2	90°	90°	3⅛"	9"	1'-0"	1'-0"	159'-5⅛"	2"	1'-5½"	1'-5½"	8½"	1'-3"	8½"	1'-3"	188	3'-8"	3'-8"	141	246	28	28	27	6	6"
10	10-2	78	VI	8500	6800	2	3	1	1	10-1	10-2	90°	90°	3⅛"	9"	1'-0"	1'-0"	159'-10¼"	2"	1'-5½"	1'-5½"	8½"	1'-3"	8½"	1'-3"	188	3'-8"	3'-8"	141	246	28	28	27	6	6"
10	10-3	78	VI	8500	6800	2	3	1	1	10-1	10-2	90°	90°	3¾"	9"	1'-0"	1'-0"	160'-3½"	2"	1'-5½"	1'-5½"	8½"	1'-3"	8½"	1'-3"	188	3'-8"	3'-8"	142	246	28	28	27	6	6"
10	10-4	78	VI	8500	6800	2	3	1	1	10-1	10-2	90°	90°	3¾"	9"	1'-0"	1'-0"	160'-8¾"	2"	1'-5½"	1'-5½"	8½"	1'-3"	8½"	1'-3"	188	3'-8"	3'-8"	142	246	28	28	26	7	6"
10	10-5	78	VI	8500	6800	2	3	1	1	10-1	10-2	90°	90°	3¾"	9"	1'-0"	1'-0"	161'-2"	2"	1'-5½"	1'-5½"	8½"	1'-3"	8½"	1'-3"	190	3'-8"	3'-8"	143	246	28	28	26	7	6"
10	10-6	78	VI	8500	6800	2	3	1	1	10-1	10-2	90°	90°	3¾"	9"	1'-0"	1'-0"	161'-7¼"	2"	1'-5½"	1'-5½"	8½"	1'-3"	8½"	1'-3"	190	3'-8"	3'-8"	143	246	28	28	26	7	6"
10	10-7	78	VI	8500	6800	2	3	1	1	10-1	10-2	90°	90°	3¾"	9"	1'-0"	1'-0"	162'-0⅜"	2"	1'-5½"	1'-5½"	8½"	1'-3"	8½"	1'-3"	190	3'-8"	3'-8"	144	246	28	28	25	8	6"
10	10-8	78	VI	8500	6800	2	3	1	1	10-1	10-2	90°	90°	3¾"	9"	1'-0"	1'-0"	162'-5⅝"	2"	1'-5½"	1'-5½"	8½"	1'-3"	8½"	1'-3"	192	3'-8"	3'-8"	144	246	28	28	25	8	6"
11	11-1	78	VI	8500	6800	2	3	1	1	11-1	11-2	90°	90°	3⅞"	9"	1'-0"	1'-0"	159'-5¼"	2"	1'-5½"	1'-5½"	8½"	1'-3"	8½"	1'-3"	188	3'-8"	3'-8"	141	246	28	28	27	6	6"
11	11-2	78	VI	8500	6800	2	3	1	1	11-1	11-2	90°	90°	3⅞"	9"	1'-0"	1'-0"	159'-10⅜"	2"	1'-5½"	1'-5½"	8½"	1'-3"	8½"	1'-3"	188	3'-8"	3'-8"	141	246	28	28	27	6	6"
11	11-3	78	VI	8500	6800	2	3	1	1	11-1	11-2	90°	90°	3⅞"	9"	1'-0"	1'-0"	160'-3⅝"	2"	1'-5½"	1'-5½"	8½"	1'-3"	8½"	1'-3"	188	3'-8"	3'-8"	142	246	28	28	27	6	6"
11	11-4	78	VI	8500	6800	2	3	1	1	11-1	11-2	90°	90°	3⅞"	9"	1'-0"	1'-0"	160'-8⅞"	2"	1'-5½"	1'-5½"	8½"	1'-3"	8½"	1'-3"	188	3'-8"	3'-8"	142	246	28	28	26	7	6"
11	11-5	78	VI	8500	6800	2	3	1	1	11-1	11-2	90°	90°	3⅞"	9"	1'-0"	1'-0"	161'-2⅛"	2"	1'-5½"	1'-5½"	8½"	1'-3"	8½"	1'-3"	190	3'-8"	3'-8"	143	246	28	28	26	7	6"
11	11-6	78	VI	8500	6800	2	3	1	1	11-1	11-2	90°	90°	3⅞"	9"	1'-0"	1'-0"	161'-7⅜"	2"	1'-5½"	1'-5½"	8½"	1'-3"	8½"	1'-3"	190	3'-8"	3'-8"	143	246	28	28	26	7	6"
11	11-7	78	VI	8500	6800	2	3	1	1	11-1	11-2	90°	90°	3⅞"	9"	1'-0"	1'-0"	162'-0½"	2"	1'-5½"	1'-5½"	8½"	1'-3"	8½"	1'-3"	190	3'-8"	3'-8"	144	246	28	28	25	8	6"
11	11-8	78	VI	8500	6800	2	3	1	1	11-1	11-2	90°	90°	3⅞"	9"	1'-0"	1'-0"	162'-5¾"	2"	1'-5½"	1'-5½"	8½"	1'-3"	8½"	1'-3"	192	3'-8"	3'-8"	144	246	28	28	25	8	6"

DIMENSION NOTES

* All longitudinal beam dimensions shown on this sheet with a single asterisk (*) are measured along the centerline of beam. Dimension "R" is calculated at mid-height of the beam.

** End beam bearing dimensions "J" and "K" are measured perpendicular to ℄ Bearing along the bottom of the beam.

BEARING PLATES

*** See the Bearing Plate Data Table for details.

NOTE: Work this sheet with Standard Plans Index 450-010 and the applicable "Florida-I Beam Standard Details" Index.

BRIDGE NO. 124143

NOTICE: THE OFFICIAL RECORD OF THIS SHEET IS THE ELECTRONIC FILE DIGITALLY SIGNED AND SEALED UNDER RULE 61G15-23.004, F.A.C.

REVISIONS					
DATE	BY	DESCRIPTION	DATE	BY	DESCRIPTION

Kisinger Campo & Associates Corp.
201 N. Franklin Street
Suite 400
Tampa, FL 33602
Alfredo Jose Layrisse, PE No. 75610

DRAWN BY: DAA 12-19
CHECKED BY: KL 04-21
DESIGNED BY: DAA 11-19
CHECKED BY: SKB 12-19

LEE COUNTY PUBLIC WORKS
DEPARTMENT OF TRANSPORTATION

ROAD NO.	COUNTY	COUNTY PROJECT No
CR 865	LEE	CN160002

SHEET TITLE: BEAM DATA TABLE (3 OF 4)

REF. DWG. NO.:

PROJECT NAME: ESTERO BLVD. (CR 865) OVER BIG CARLOS PASS

SHEET NO.: B1-116

FLORIDA-I BEAM - TABLE OF BEAM VARIABLES

Table Date 01-01-16

LOCATION		BEAM TYPE	CONCRETE PROPERTIES			STND. PTRN. TYPE	END ELEV. COND.	PLAN VIEW CASE		BRG. PLATE MARK ***		END OF BEAM & BEARING DIMENSIONS **						BEAM DIMENSIONS *		REINFORCING STEEL														
SPAN NO.	BEAM NO.		CLASS	STRENGTHS (psi)				END 1	END 2	END 1	END 2	ANGLE Ø		DIM P	DIM J	DIM K1	DIM K2			3C1	3C2	3D1		3D2		3D3	4M1	4M2	4M3	5K	NO. OF SPACES BARS 5K				SP. BARS 5K *
				28 Day	Release							END 1	END 2					DIM L	DIM R	C	C	A	B	A	B	NO.	D	D	NO.	NO.	S1	S2	S3	S4	V1
12	12-1	78	VI	8500	6800	2	3	1	1	12-1	12-2	90°	90°	3⅞"	9"	1'-0"	1'-0"	161'-4⅝"	2"	1'-5½"	1'-5½"	8½"	1'-3"	8½"	1'-3"	190	3'-8"	3'-8"	143	246	28	28	26	7	6"
12	12-2	78	VI	8500	6800	2	3	1	1	12-1	12-2	90°	90°	3⅞"	9"	1'-0"	1'-0"	161'-2¾"	2"	1'-5½"	1'-5½"	8½"	1'-3"	8½"	1'-3"	190	3'-8"	3'-8"	143	246	28	28	26	7	6"
12	12-3	78	VI	8500	6800	2	3	1	1	12-1	12-2	90°	90°	3⅞"	9"	1'-0"	1'-0"	161'-0¾"	2"	1'-5½"	1'-5½"	8½"	1'-3"	8½"	1'-3"	190	3'-8"	3'-8"	143	246	28	28	26	7	6"
12	12-4	78	VI	8500	6800	2	3	1	1	12-1	12-2	90°	90°	3⅞"	9"	1'-0"	1'-0"	160'-10¾"	2"	1'-5½"	1'-5½"	8½"	1'-3"	8½"	1'-3"	190	3'-8"	3'-8"	142	246	28	28	26	7	6"
12	12-5	78	VI	8500	6800	2	3	1	1	12-1	12-2	90°	90°	3⅞"	9"	1'-0"	1'-0"	160'-8¾"	2"	1'-5½"	1'-5½"	8½"	1'-3"	8½"	1'-3"	188	3'-8"	3'-8"	142	246	28	28	27	6	6"
12	12-6	78	VI	8500	6800	2	3	1	1	12-1	12-2	90°	90°	3⅞"	9"	1'-0"	1'-0"	160'-6⅞"	2"	1'-5½"	1'-5½"	8½"	1'-3"	8½"	1'-3"	188	3'-8"	3'-8"	142	246	28	28	27	6	6"
12	12-7	78	VI	8500	6800	2	3	1	1	12-1	12-2	90°	90°	3⅞"	9"	1'-0"	1'-0"	160'-4⅞"	2"	1'-5½"	1'-5½"	8½"	1'-3"	8½"	1'-3"	188	3'-8"	3'-8"	142	246	28	28	27	6	6"
12	12-8	78	VI	8500	6800	2	3	1	1	12-1	12-2	90°	90°	3⅞"	9"	1'-0"	1'-0"	160'-2⅞"	2"	1'-5½"	1'-5½"	8½"	1'-3"	8½"	1'-3"	188	3'-8"	3'-8"	142	246	28	28	27	6	6"
13	13-1	78	VI	8500	6800	2	3	1	1	13-1	13-2	90°	90°	3⅞"	9"	1'-0"	1'-0"	162'-3⅛"	2"	1'-5½"	1'-5½"	8½"	1'-3"	8½"	1'-3"	190	3'-8"	3'-8"	144	246	28	28	25	8	6"
13	13-2	78	VI	8500	6800	2	3	1	1	13-1	13-2	90°	90°	3⅞"	9"	1'-0"	1'-0"	161'-9⅞"	2"	1'-5½"	1'-5½"	8½"	1'-3"	8½"	1'-3"	190	3'-8"	3'-8"	143	246	28	28	25	8	6"
13	13-3	78	VI	8500	6800	2	3	1	1	13-1	13-2	90°	90°	3⅞"	9"	1'-0"	1'-0"	161'-4⅝"	2"	1'-5½"	1'-5½"	8½"	1'-3"	8½"	1'-3"	190	3'-8"	3'-8"	143	246	28	28	26	7	6"
13	13-4	78	VI	8500	6800	2	3	1	1	13-1	13-2	90°	90°	3⅞"	9"	1'-0"	1'-0"	160'-11⅜"	2"	1'-5½"	1'-5½"	8½"	1'-3"	8½"	1'-3"	190	3'-8"	3'-8"	143	246	28	28	26	7	6"
13	13-5	78	VI	8500	6800	2	3	1	1	13-1	13-2	90°	90°	3⅞"	9"	1'-0"	1'-0"	160'-6⅛"	2"	1'-5½"	1'-5½"	8½"	1'-3"	8½"	1'-3"	188	3'-8"	3'-8"	142	246	28	28	27	6	6"
13	13-6	78	VI	8500	6800	2	3	1	1	13-1	13-2	90°	90°	3⅞"	9"	1'-0"	1'-0"	160'-1"	2"	1'-5½"	1'-5½"	8½"	1'-3"	8½"	1'-3"	188	3'-8"	3'-8"	142	246	28	28	27	6	6"
13	13-7	78	VI	8500	6800	2	3	1	1	13-1	13-2	90°	90°	3⅞"	9"	1'-0"	1'-0"	159'-7¾"	2"	1'-5½"	1'-5½"	8½"	1'-3"	8½"	1'-3"	188	3'-8"	3'-8"	141	246	28	28	28	5	6"
13	13-8	78	VI	8500	6800	2	3	1	1	13-1	13-2	90°	90°	4"	9"	1'-0"	1'-0"	159'-2½"	2"	1'-5½"	1'-5½"	8½"	1'-3"	8½"	1'-3"	186	3'-8"	3'-8"	141	246	28	28	28	5	6"
14	14-1	78	VI	8500	6800	2	3	1	1	14-1	14-2	90°	90°	3⅞"	9"	1'-0"	1'-1½"	162'-1⅝"	2"	1'-5½"	1'-5½"	8½"	1'-3"	8½"	1'-3"	190	3'-8"	3'-8"	144	246	28	28	25	8	6"
14	14-2	78	VI	8500	6800	2	3	1	1	14-1	14-2	90°	90°	3⅞"	9"	1'-0"	1'-1½"	161'-8⅜"	2"	1'-5½"	1'-5½"	8½"	1'-3"	8½"	1'-3"	190	3'-8"	3'-8"	143	246	28	28	25	8	6"
14	14-3	78	VI	8500	6800	2	3	1	1	14-1	14-2	90°	90°	3⅞"	9"	1'-0"	1'-1½"	161'-3⅛"	2"	1'-5½"	1'-5½"	8½"	1'-3"	8½"	1'-3"	190	3'-8"	3'-8"	143	246	28	28	26	7	6"
14	14-4	78	VI	8500	6800	2	3	1	1	14-1	14-2	90°	90°	3⅞"	9"	1'-0"	1'-1½"	160'-9⅞"	2"	1'-5½"	1'-5½"	8½"	1'-3"	8½"	1'-3"	188	3'-8"	3'-8"	142	246	28	28	26	7	6"
14	14-5	78	VI	8500	6800	2	3	1	1	14-1	14-2	90°	90°	3⅞"	9"	1'-0"	1'-1½"	160'-4⅝"	2"	1'-5½"	1'-5½"	8½"	1'-3"	8½"	1'-3"	188	3'-8"	3'-8"	142	246	28	28	27	6	6"
14	14-6	78	VI	8500	6800	2	3	1	1	14-1	14-2	90°	90°	3⅞"	9"	1'-0"	1'-1½"	159'-11½"	2"	1'-5½"	1'-5½"	8½"	1'-3"	8½"	1'-3"	188	3'-8"	3'-8"	142	246	28	28	27	6	6"
14	14-7	78	VI	8500	6800	2	3	1	1	14-1	14-2	90°	90°	3⅞"	9"	1'-0"	1'-1½"	159'-6¼"	2"	1'-5½"	1'-5½"	8½"	1'-3"	8½"	1'-3"	188	3'-8"	3'-8"	141	246	28	28	28	5	6"
14	14-8	78	VI	8500	6800	2	3	1	1	14-1	14-2	90°	90°	4"	9"	1'-0"	1'-1½"	159'-1"	2"	1'-5½"	1'-5½"	8½"	1'-3"	8½"	1'-3"	186	3'-8"	3'-8"	141	246	28	28	28	5	6"

DIMENSION NOTES

* All longitudinal beam dimensions shown on this sheet with a single asterisk (*) are measured along the centerline of beam. Dimension "R" is calculated at mid-height of the beam.

** End beam bearing dimensions "J" and "K" are measured perpendicular to ℄ Bearing along the bottom of the beam.

BEARING PLATES

*** See the Bearing Plate Data Table for details.

NOTE: Work this sheet with Standard Plans Index 450-010 and the applicable "Florida-I Beam Standard Details" Index.

BRIDGE NO. 124143

NOTICE: THE OFFICIAL RECORD OF THIS SHEET IS THE ELECTRONIC FILE DIGITALLY SIGNED AND SEALED UNDER RULE 61G15-23.004, F.A.C.

REVISIONS					
DATE	BY	DESCRIPTION	DATE	BY	DESCRIPTION

Kisinger Campo & Associates Corp.
201 N. Franklin Street
Suite 400
Tampa, FL 33602
Alfredo Jose Layrisse, PE No. 75610

DRAWN BY: DAA 12-19
CHECKED BY: KL 04-21
DESIGNED BY: DAA 11-19
CHECKED BY: SKB 12-19

LEE COUNTY PUBLIC WORKS
DEPARTMENT OF TRANSPORTATION

ROAD NO.	COUNTY	COUNTY PROJECT No
CR 865	LEE	CN160002

SHEET TITLE: BEAM DATA TABLE (4 OF 4)

REF. DWG. NO.:

PROJECT NAME: ESTERO BLVD. (CR 865) OVER BIG CARLOS PASS

SHEET NO.: B1-117

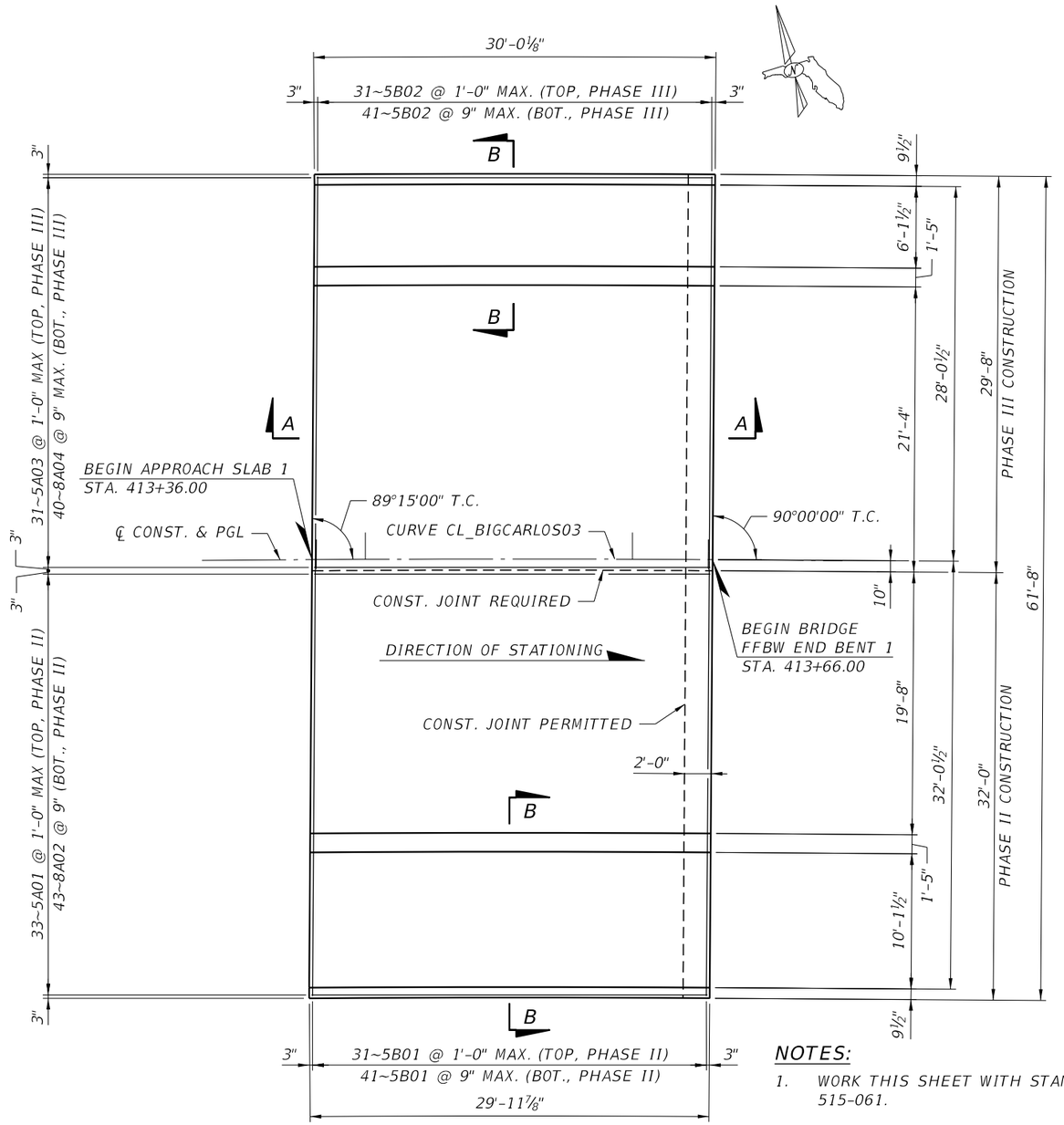

APPROACH SLAB 1

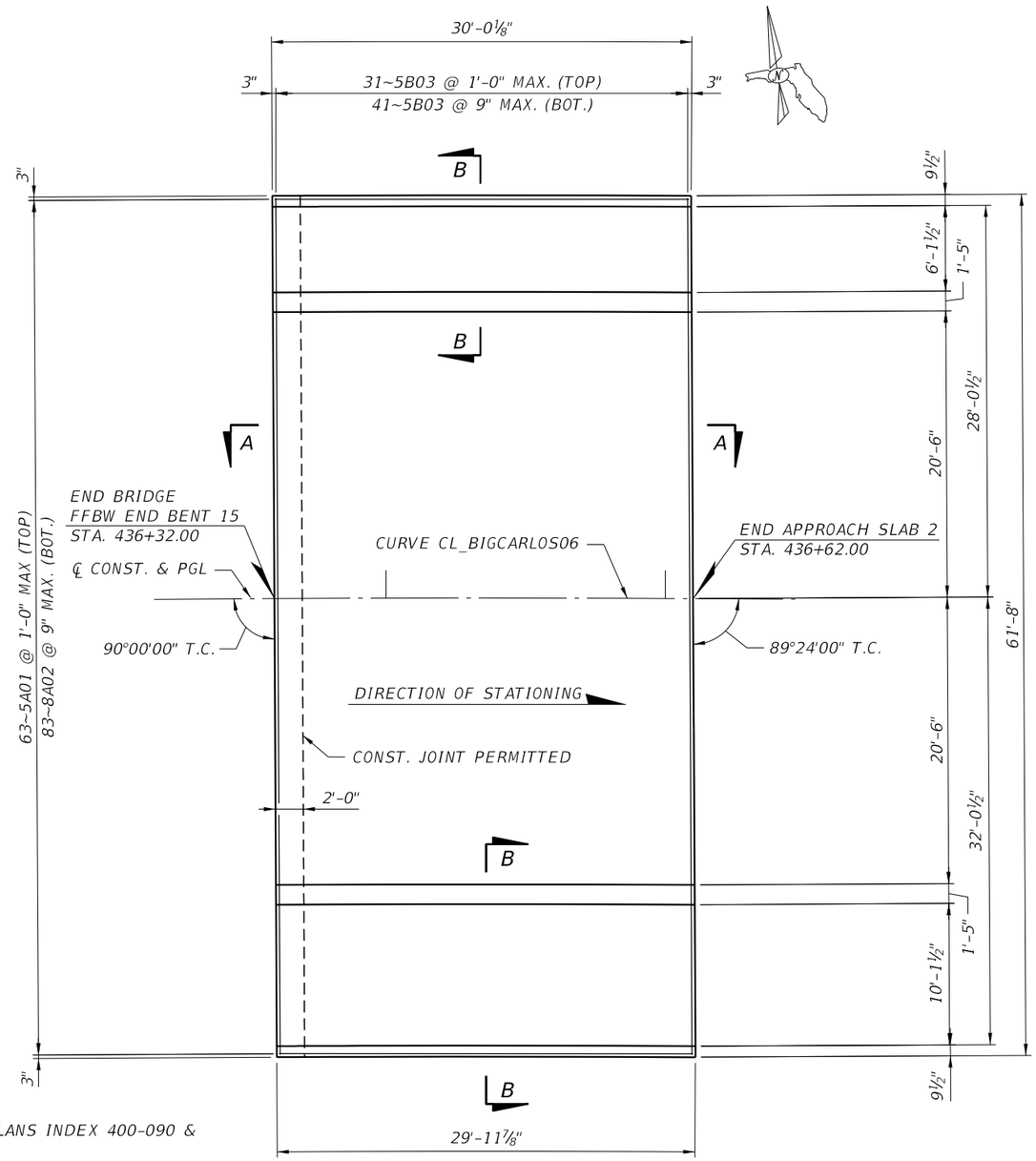

APPROACH SLAB 2

NOTES:

1. WORK THIS SHEET WITH STANDARD PLANS INDEX 400-090 & 515-061.
2. FOR TRAFFIC RAILING DETAILS, SEE 32" CORRAL BARRIER DETAILS SHEETS B1-121 THRU B1-126.
3. FOR SECTION B-B, TABLE OF SLAB DIMENSIONS, AND ADDITIONAL DETAILS, SEE SHEET 2 OF 2.
4. FOR REINFORCING BAR LIST, SEE SHEET B1-147.
5. FOR QUANTITIES, SEE SHEET BQ-3.
6. SEE STANDARD PLANS INDEX 400-090 FOR SECTION A-A.

BRIDGE NO. 124143

REVISIONS					
DATE	BY	DESCRIPTION	DATE	BY	DESCRIPTION

Kisinger Campo & Associates Corp.
201 N. Franklin Street
Suite 400
Tampa, FL 33602
Alfredo Jose Layrisse, PE No. 75610

DRAWN BY:	CHECKED BY:	DESIGNED BY:	CHECKED BY:
DAA 04-21	KL 04-21	DAA 04-21	SKB 04-21

LEE COUNTY PUBLIC WORKS
DEPARTMENT OF TRANSPORTATION

ROAD NO.	COUNTY	COUNTY PROJECT No
CR 865	LEE	CN160002

SHEET TITLE: APPROACH SLABS (1 OF 2)

REF. DWG. NO.:

PROJECT NAME: ESTERO BLVD. (CR 865) OVER BIG CARLOS PASS

SHEET NO.: B1-118

NOTICE: THE OFFICIAL RECORD OF THIS SHEET IS THE ELECTRONIC FILE DIGITALLY SIGNED AND SEALED UNDER RULE 61G15-23.004, F.A.C.

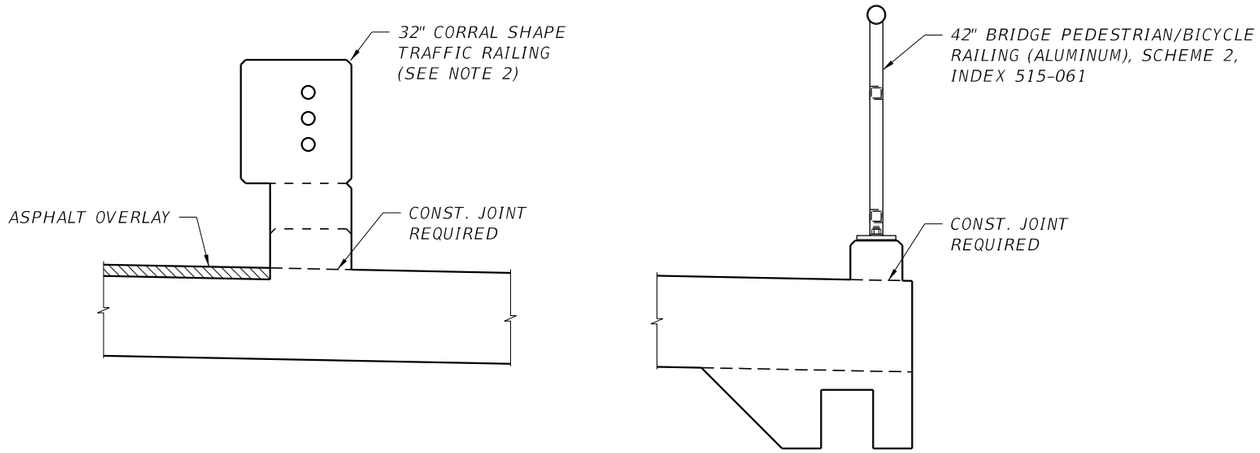

SECTION B-B
APPROACH SLAB WITH SIDEWALK

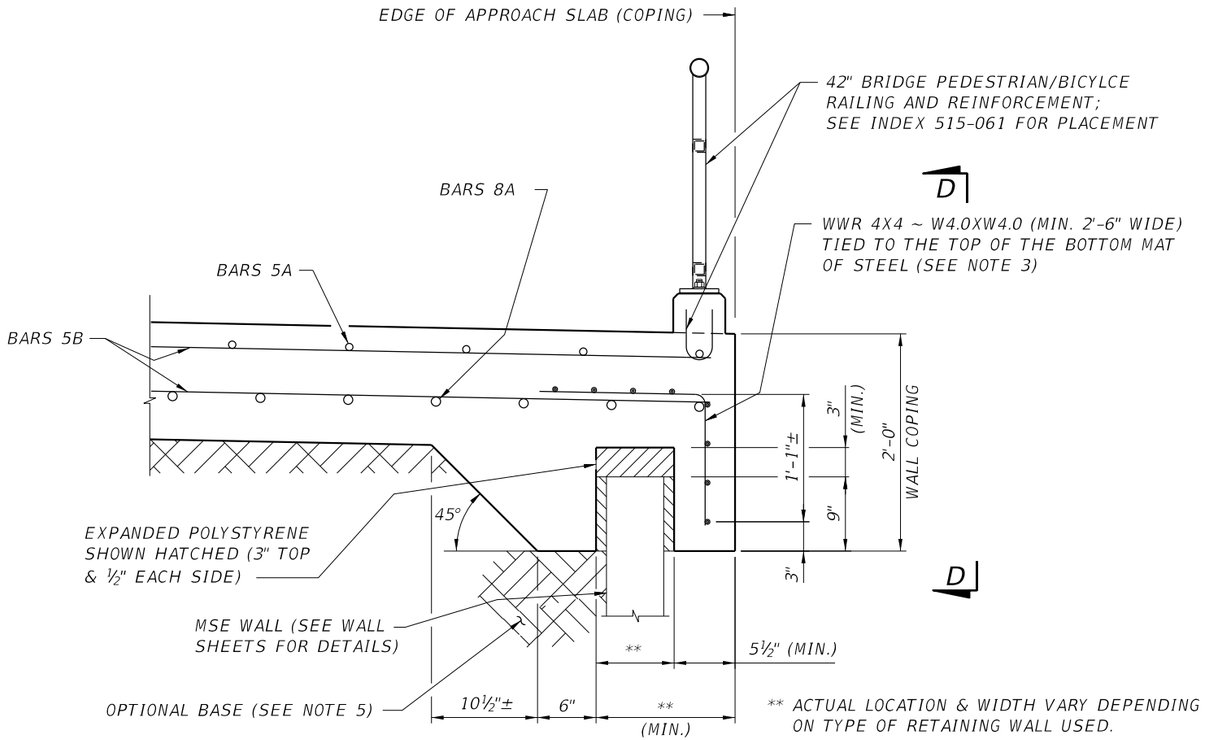

SECTION THRU APPROACH SLAB AND RETAINING WALL

NOTES:

1. SURFACE TREATMENT: AS AN OPTION TO CLASS 4 FLOOR FINISH (BRIDGE FLOOR GROOVING) PER SECTION 400 A HAND TINED OR HEAVY BROOMED FINISH MAY BE PERMITTED ON THE CONCRETE PORTION OF THE RIDING SURFACE. SIDEWALK AREAS SHALL RECEIVE A BROOMED FINISH. THE TOP SURFACE OF THE CONCRETE BENEATH THE ASPHALT OVERLAY SHALL BE RAKED.
2. FOR TRAFFIC RAILING AND CONDUIT DETAILS, SEE 32" CORRAL BARRIER DETAILS SHEETS.
3. DEFORMED WWR MUST MEET THE REQUIREMENTS OF SPECIFICATION SECTION 931.
4. CONTINUE THE ASPHALT PAVEMENT OVER THE APPROACH SLAB AND MATCH THE FRICTION COURSE TYPE USED ON THE ROADWAY.
5. PAYMENT: DEFORMED WWR FOR THE EDGE OF APPROACH SLABS ON MSE WALLS IS NOT INCLUDED IN THE ESTIMATED QUANTITY FOR REINFORCING STEEL AND IS CONSIDERED INCIDENTAL TO THE WORK. SEE ROADWAY PLANS FOR ASPHALT OVERLAY AND OPTIONAL BASE DETAILS AND QUANTITIES.
6. FOR LONGITUDINAL CONSTRUCTION JOINT DETAIL AND VIEW D-D, SEE INDEX 400-090 SHEET 2 OF 2.
7.

APPROACH SLAB TABLE OF DIMENSIONS

Table Date 11-01-16

LOCATION	DIMENSIONS					ANGLE Ø
	L1	L2	M1	M2	N	
APPROACH SLAB 1	30'-0"	30'-0"	9½"	9½"	60'-1"	00°00'00"
APPROACH SLAB 2	30'-0"	30'-0"	9½"	9½"	60'-1"	00°00'00"

Dimension Notes:
Dimensions L1 & L2 are measured along gutter line, inside face of parapet or inside face of railing on sidewalks.
Dimensions L1 & L2 are arc dimensions within curved alignments.

Work this Data Table with Standard Plans Index 400-090.

BRIDGE NO. 124143

NOTICE: THE OFFICIAL RECORD OF THIS SHEET IS THE ELECTRONIC FILE DIGITALLY SIGNED AND SEALED UNDER RULE 61G15-23.004, F.A.C.

REVISIONS					
DATE	BY	DESCRIPTION	DATE	BY	DESCRIPTION

Kisinger Campo & Associates Corp.
201 N. Franklin Street
Suite 400
Tampa, FL 33602
Alfredo Jose Layrisse, PE No. 75610

DRAWN BY: DAA 04-21
CHECKED BY: KL 04-21
DESIGNED BY: DAA 04-21
CHECKED BY: SKB 04-21

LEE COUNTY PUBLIC WORKS
DEPARTMENT OF TRANSPORTATION

ROAD NO.	COUNTY	COUNTY PROJECT No
CR 865	LEE	CN160002

SHEET TITLE: APPROACH SLABS (2 OF 2)

REF. DWG. NO.:

PROJECT NAME: ESTERO BLVD. (CR 865) OVER BIG CARLOS PASS

SHEET NO.: B1-119

Load Rating Summary Details for Prestressed Concrete Bridges (Flat Slab and Deck/Girder)

Table Date 07-01-15

Table 2 - LRFR

Level	Limit State	Vehicle	Weight (tons)	Load Factors			Moment (Strength) or Stress (Service)					Shear (Strength)					
				LL	DC	DW	Distribution Factor (DF)	Rating Factor	Tons	Location	Dimension	Distribution Factor (DF)	Rating Factor	Tons	Location	Dimension	Comments: Interior/exterior beam DF method if other than LRFD. Other appropriate comments
Design Load Rating	Strength I (Inv)	HL-93	N/A	1.75	1.25	1.50	0.86	1.38	N/A	A	85.65	0.96	1.86	N/A	B	22.47	BEAM 1-9 (M) & BEAM 14-1 (S)
	Strength I (Op)	HL-93	N/A	1.35	1.25	1.50	0.86	1.79	N/A	A	85.65	0.96	2.41	N/A	B	22.47	BEAM 1-9 (M) & BEAM 14-1 (S)
	Service III (Inv)	HL-93	N/A	0.80	1.00	1.00	0.86	1.10	N/A	A	85.65	N/A	N/A	N/A	N/A	N/A	BEAM 1-9 (M)
Permit Load Rating	Strength II	FL120	60.0	1.35	1.25	1.50	0.86	1.76	105.31	A	85.65	0.96	2.22	133.05	B	22.47	BEAM 1-9 (M) & BEAM 14-1 (S)

GENERAL NOTES:
1. THIS TABLE IS BASED ON THE REQUIREMENTS ESTABLISHED IN THE JANUARY 2019 "STRUCTURES MANUAL".
2. RATING FACTORS CALCULATED USING "FDOT LRFD PRESTRESSED BEAM PROGRAM V5.2."

TABLE 2 NOTES [NOTES DATE 07-01-15]:
1. PERMIT CAPACITY IS DETERMINED BY USING THE PERMIT VEHICLE IN ALL LANES.
2. SERVICE III DESIGN INVENTORY TENSILE STRESS LIMITS = $3\sqrt{f'c}$.
3. HAS THE AASHTO LRFD SPECIFICATIONS ARTICLE 5.8.3.5 LONGITUDINAL REINFORCEMENT BEEN SATISFIED
☒ YES ☐ NO

ABBREVIATIONS:

INV - INVENTORY
OP - OPERATING

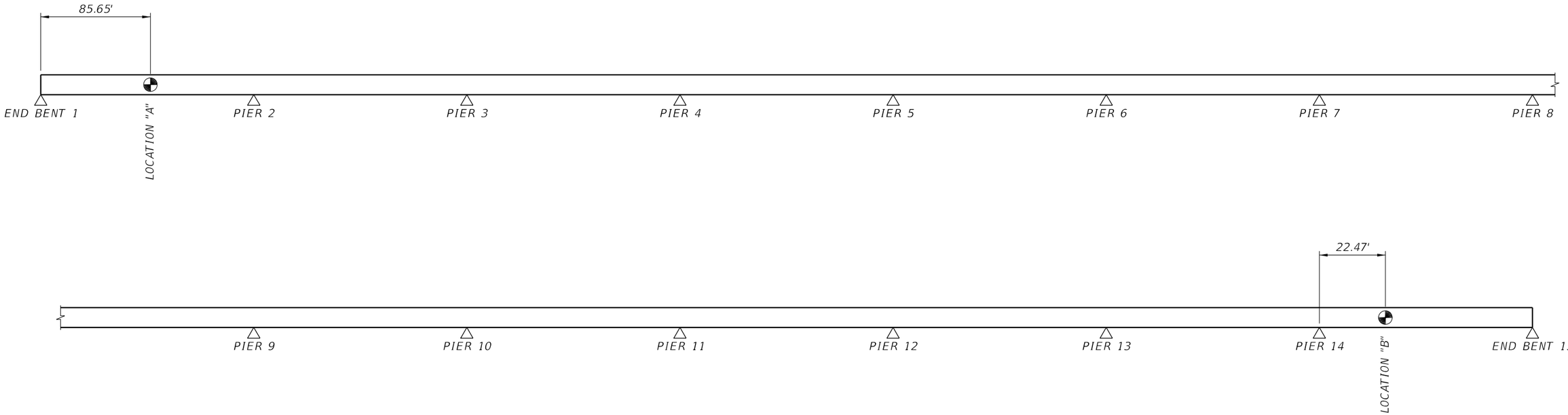

RATING LOCATIONS

BRIDGE NO. 124143

NOTICE: THE OFFICIAL RECORD OF THIS SHEET IS THE ELECTRONIC FILE DIGITALLY SIGNED AND SEALED UNDER RULE 61G15-23.004, F.A.C.

REVISIONS					
DATE	BY	DESCRIPTION	DATE	BY	DESCRIPTION

Kisinger Campo & Associates Corp.
201 N. Franklin Street
Suite 400
Tampa, FL 33602
Alfredo Jose Layrisse, PE No. 75610

DRAWN BY: DAA 12-19
CHECKED BY: KL 04-21
DESIGNED BY: DAA 11-19
CHECKED BY: SKB 12-19

LEE COUNTY PUBLIC WORKS
DEPARTMENT OF TRANSPORTATION

ROAD NO.	COUNTY	COUNTY PROJECT No
CR 865	LEE	CN160002

SHEET TITLE: LOAD RATING

REF. DWG. NO.:

PROJECT NAME: ESTERO BLVD. (CR 865) OVER BIG CARLOS PASS

SHEET NO.: B1-120

* SEE STRUCTURES PLANS SUPERSTRUCTURE AND APPROACH SLAB SHEETS FOR ACTUAL DIMENSIONS AND JOINT ORIENTATION. PROVIDE OPEN RAILING JOINTS AT DECK EXPANSION JOINT LOCATIONS MATCHING THE DIMENSION OF THE DECK JOINT.

** ¾" INTERMEDIATE OPEN JOINTS IN THE RAIL AND POST SHALL BE PROVIDED AT SUBSTRUCTURE SUPPORTS WHERE THE SUPERSTRUCTURE DECK IS CONTINUOUS.

NOTES:
1. END POST DIMENSIONS FOR A GIVEN SPAN SHALL MATCH.
2. (NF) MEANS NEAR FACE, (FF) MEANS FAR FACE.

CROSS REFERENCES:
FOR SECTIONS SEE SHEET B1-123.
FOR DETAIL "A" SEE SHEET B1-123.
FOR REBAR DETAIL AND QUANTITY BREAKDOWN SEE SHEET B1-126.

BARRIER DELINEATOR SPACING	
DISTANCE – EDGE OF TRAVEL LANE TO FACE OF RAILING	SPACING (FT.)
< 4'	40'
4' TO 8'	80'
> THAN 8'	NONE REQUIRED

NOTE TO REVIEWER:
TRAFFIC RAILING IS BEING COORDINATED WITH SDO FOR APPROVAL

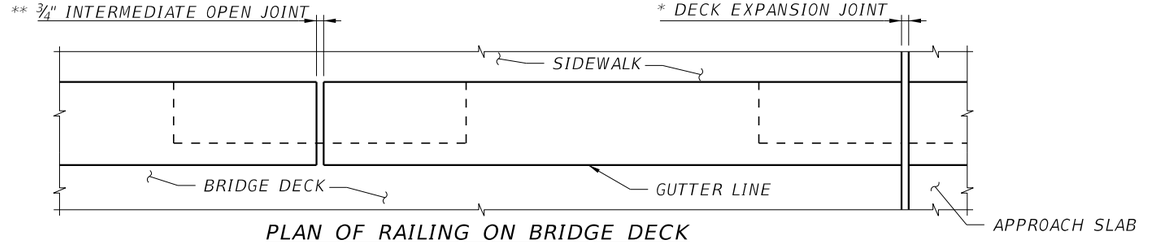

PLAN OF RAILING ON BRIDGE DECK

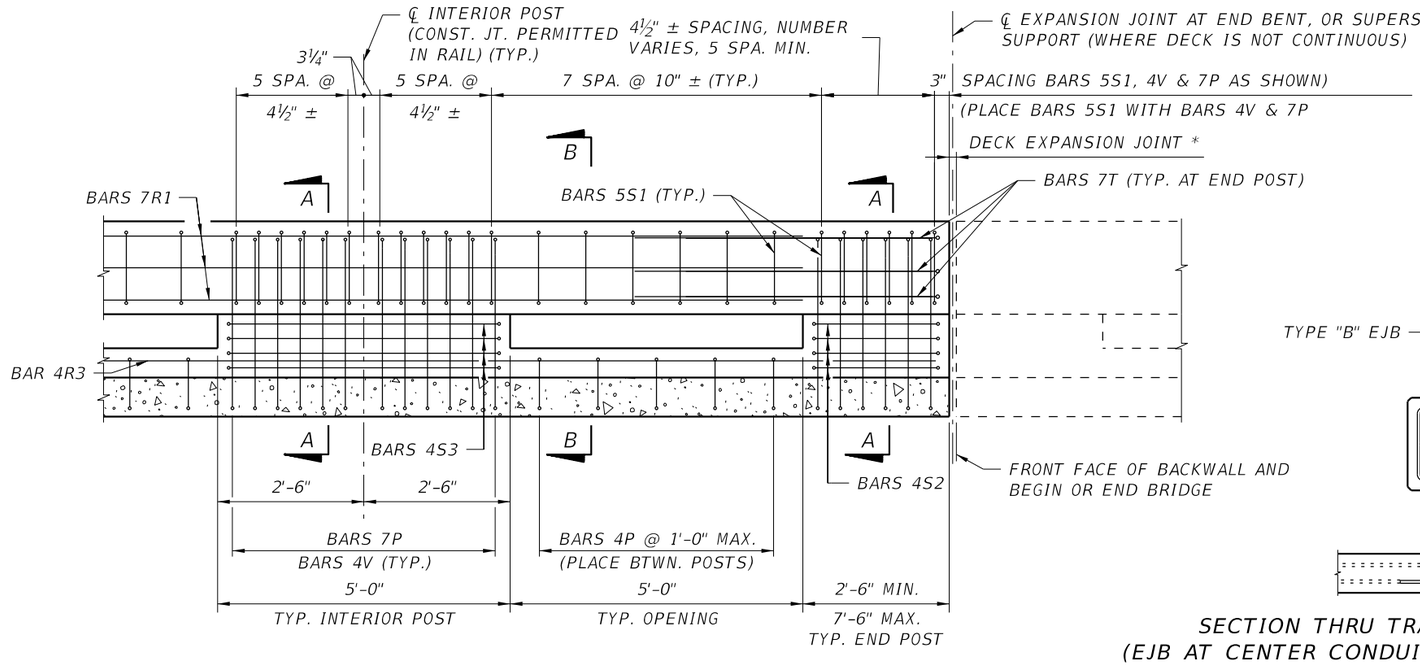

ELEVATION OF INSIDE FACE OF RAILING
(BRIDGE DECK SHOWN,
APPROACH SLAB WITHOUT GUARDRAIL OR ADJACENT TO ROADWAY BARRIER SIMILAR)

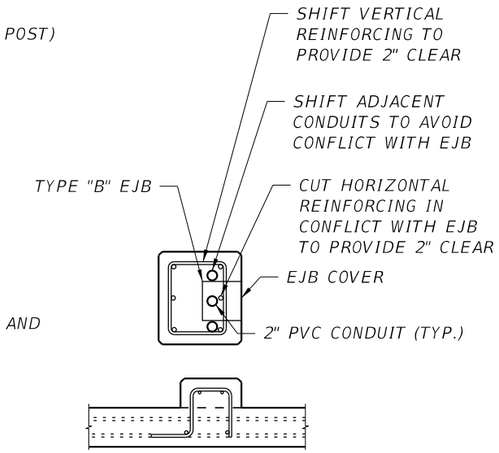

SECTION THRU TRAFFIC RAILING AT EJB
(EJB AT CENTER CONDUIT SHOWN, OTHERS SIMILAR)

TRAFFIC RAILING NOTES

THIS RAILING HAS BEEN STRUCTURALLY EVALUATED TO BE EQUIVALENT OR GREATER IN STRENGTH TO OTHER RAILINGS WHICH HAVE BEEN CRASH TESTED TO NCHRP REPORT 350 TL-4 CRITERIA.

CONCRETE AND REINFORCING STEEL: FOR MATERIAL SPECIFICATIONS, SEE STRUCTURES PLANS GENERAL NOTES. FOR MATERIALS AND LABOR COST, THE TRAFFIC BARRIER PLACED WITHIN THE BRIDGE AND APPROACH SLAB LIMITS SHALL BE PAID THROUGH THE PAY ITEM NUMBER 521-5-6 MOD, CONCRETE TRAFFIC RAILING, CORRAL WITH CURB.
AGGREGATE LIMITATION: THE AGGREGATE USED IN THE CONCRETE MIX SHALL BE A #67 AGGREGATE.
GUARDRAIL: FOR GUARDRAIL CONNECTION DETAILS SEE INDEX NO. 400.
SUPERELEVATED BRIDGES: AT THE OPTION OF THE CONTRACTOR THE TRAFFIC RAILING ON SUPERELEVATED BRIDGES MAY BE CONSTRUCTED PERPENDICULAR TO THE ROADWAY SURFACE. THE COST OF ALL MODIFICATIONS WILL BE AT THE CONTRACTOR'S EXPENSE.

EMBEDDED CONDUIT: FOR EMBEDDED CONDUIT AND JUNCTION BOXES USE INDEX 630-010. ALL JUNCTION BOXES TO BE EJB "B" AND STAGGERED AS PER INDEX 630-010. SHIFT CONDUITS AS NECESSARY TO PROVIDE A MINIMUM OF 2" CLEARANCE BETWEEN THE FACE OF THE BARRIER AND EJB.

COUPLERS: THE COST OF EMBEDDED COUPLERS SHALL BE INCLUDED IN THE CONTRACT UNIT PRICE FOR THE TRAFFIC RAILING

RETAINING WALL: THE TRAFFIC RAILING BARRIER PLACED OUTSIDE THE BRIDGE DECK AND APPROACH SLABS IS TO BE PROVIDED ON A RETAINING WALL AS SHOWN IN SHEETS B1-124 AND B1-125. THE COST OF THE RETAINING WALL SHALL BE INCLUDED IN THE CONTRACT UNIT PRICE FOR THE TRAFFIC RAILING.
NAME, DATE AND BRIDGE NUMBER: THE NAME AND BRIDGE NUMBER SHALL BE PLACED ON THE TRAFFIC RAILING SO AS TO BE SEEN ON THE DRIVER'S RIGHT SIDE WHEN APPROACHING THE BRIDGE. THE NAME SHALL BE AS SHOWN IN THE GENERAL NOTES IN THE STRUCTURES PLANS. THE DATE SHALL BE PLACED ON THE DRIVER'S LEFT SIDE WHEN APPROACHING THE BRIDGE. THE DATE SHALL BE THE YEAR THE BRIDGE IS COMPLETED. FOR A WIDENING WHEN THE EXISTING RAILING IS REMOVED, USE BOTH THE EXISTING DATE AND THE YEAR OF THE WIDENING. BLACK PLASTIC LETTERS AND FIGURES 3" IN HEIGHT MAY BE USED, AS APPROVED BY THE ENGINEER, IN LIEU OF THE LETTERS AND FIGURES FORMED BY ⅜" V-GROOVES. V-GROOVES SHALL BE FORMED BY PREFORMED LETTERS AND FIGURES.
BARRIER DELINEATORS: BARRIER DELINEATORS SHALL MEET SPECIFICATION SECTION 993. INSTALL BARRIER DELINEATORS ON TOP OF THE TRAFFIC RAILING 2" FROM THE FACE ON THE TRAFFIC SIDE AT THE SPACING SHOWN IN THE TABLE ABOVE. BARRIER DELINEATOR COLOR (WHITE OR YELLOW) SHALL MATCH THE COLOR OF THE NEAR EDGELINE. THE COST OF THE BARRIER DELINEATORS SHALL BE INCLUDED IN THE CONTRACT UNIT PRICE FOR THE TRAFFIC RAILING.

BRIDGE NO. 124143

REVISIONS					
DATE	BY	DESCRIPTION	DATE	BY	DESCRIPTION

Kisinger Campo & Associates Corp.
201 N. Franklin Street
Suite 400
Tampa, FL 33602
Alfredo Jose Layrisse, PE No. 75610

DRAWN BY: DAA 09-21
CHECKED BY: AJL 09-21
DESIGNED BY: DAA 09-21
CHECKED BY: SKB 09-21

LEE COUNTY PUBLIC WORKS
DEPARTMENT OF TRANSPORTATION

ROAD NO.	COUNTY	COUNTY PROJECT No
CR 865	LEE	CN160002

SHEET TITLE: 32" CORRAL BARRIER DETAILS (1 OF 6)
REF. DWG. NO.:
PROJECT NAME: ESTERO BLVD. (CR 865) OVER BIG CARLOS PASS
SHEET NO.: B1-121

NOTICE: THE OFFICIAL RECORD OF THIS SHEET IS THE ELECTRONIC FILE DIGITALLY SIGNED AND SEALED UNDER RULE 61G15-23.004, F.A.C.

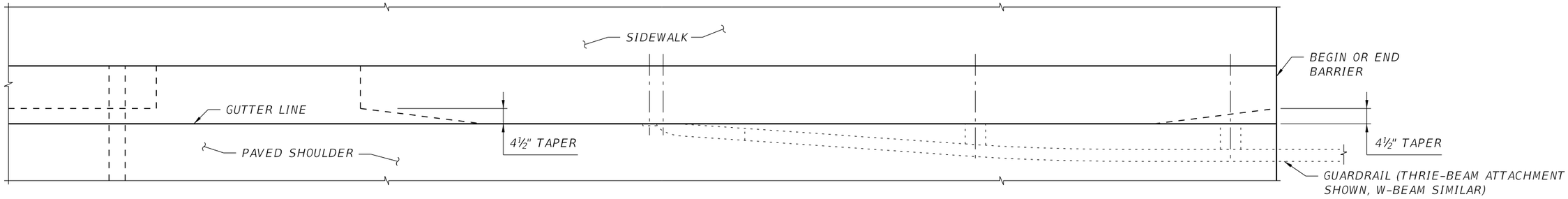

PLAN

** BEGIN PLACING RAILING BARS 7P AND 4V AT THE BARRIER END AND PROCEED TOWARD BEGIN OR END APPROACH SLAB ENSURE PLACEMENT OF GUARDRAIL BOLT HOLES IF REQUIRED, ADJUSTMENTS TO THE BAR SPACING FOR BARS 7P AND 4V SHALL BE MADE IMMEDIATELY ADJACENT TO BEGIN OR END APPROACH SLAB.

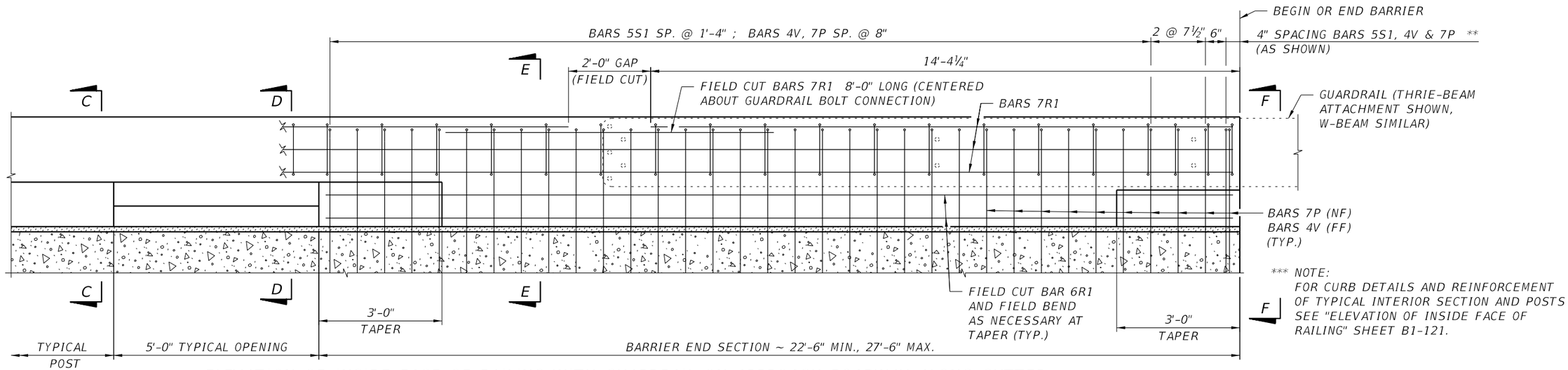

*** NOTE:
FOR CURB DETAILS AND REINFORCEMENT OF TYPICAL INTERIOR SECTION AND POSTS SEE "ELEVATION OF INSIDE FACE OF RAILING" SHEET B1-121.

ELEVATION OF INSIDE FACE OF RAILING WITH GUARDRAIL ON APPROACH ROADWAY ALONG GUTTER

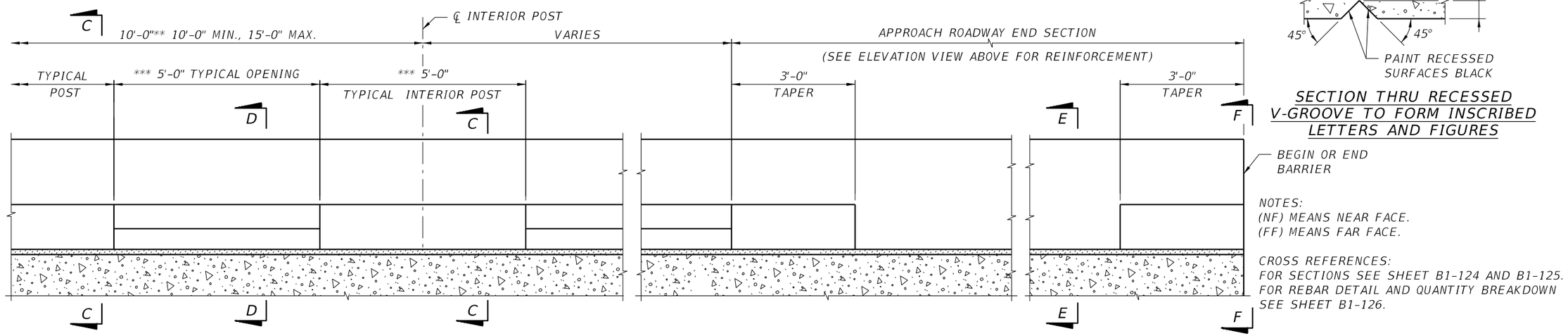

SECTION THRU RECESSED V-GROOVE TO FORM INSCRIBED LETTERS AND FIGURES

NOTES:
(NF) MEANS NEAR FACE.
(FF) MEANS FAR FACE.

CROSS REFERENCES:
FOR SECTIONS SEE SHEET B1-124 AND B1-125.
FOR REBAR DETAIL AND QUANTITY BREAKDOWN SEE SHEET B1-126.

ELEVATION OF INSIDE FACE OF RAILING WITH GUARDRAIL ON APPROACH ROADWAY ALONG GUTTER

BRIDGE NO. 124143

REVISIONS					
DATE	BY	DESCRIPTION	DATE	BY	DESCRIPTION

Kisinger Campo & Associates Corp.
201 N. Franklin Street
Suite 400
Tampa, FL 33602
Alfredo Jose Layrisse, PE No. 75610

DRAWN BY:	CHECKED BY:	DESIGNED BY:	CHECKED BY:
DAA 09-21	AJL 09-21	DAA 09-21	SKB 09-21

LEE COUNTY PUBLIC WORKS
DEPARTMENT OF TRANSPORTATION

ROAD NO.	COUNTY	COUNTY PROJECT No
CR 865	LEE	CN160002

SHEET TITLE: 32" CORRAL BARRIER DETAILS (2 OF 6)

REF. DWG. NO.:

PROJECT NAME: ESTERO BLVD. (CR 865) OVER BIG CARLOS PASS

SHEET NO.: B1-122

NOTICE: THE OFFICIAL RECORD OF THIS SHEET IS THE ELECTRONIC FILE DIGITALLY SIGNED AND SEALED UNDER RULE 61G15-23.004, F.A.C.

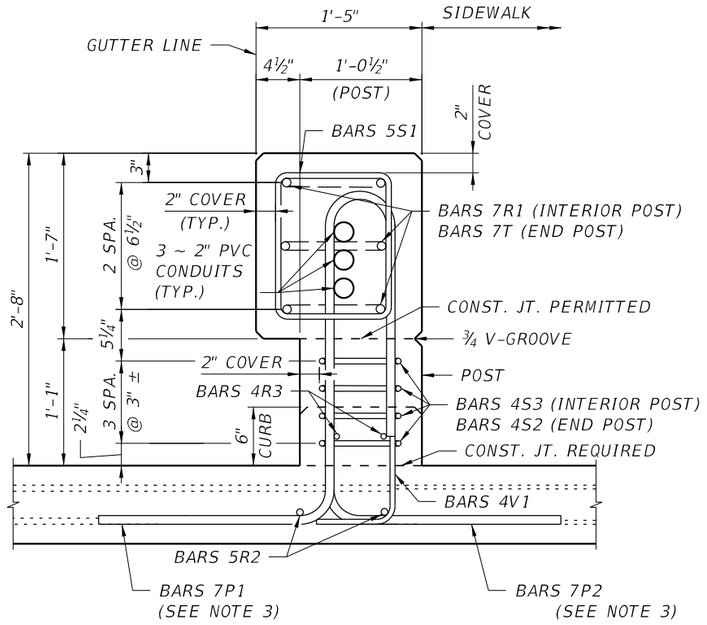

SECTION A-A

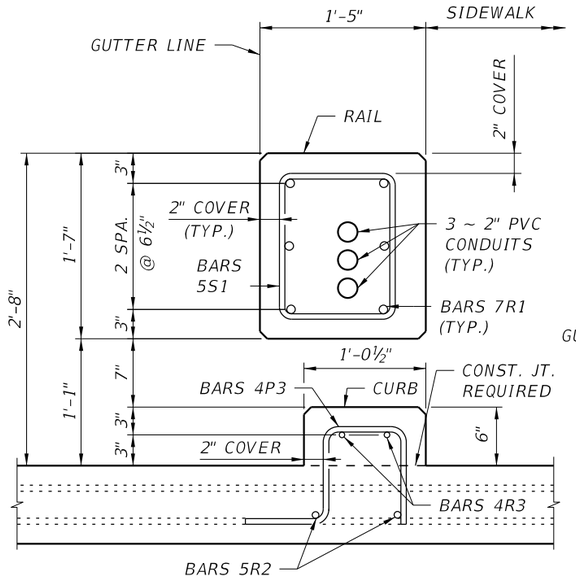

SECTION B-B

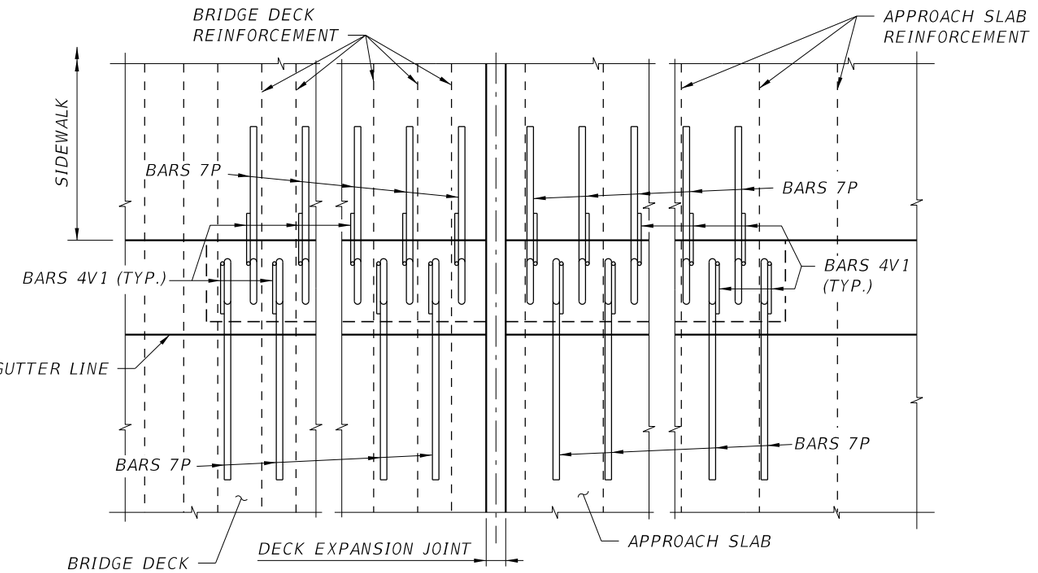

PARTIAL PLAN VIEW OF BRIDGE DECK AND APPROACH SLAB WITH SIDEWALK

(BARS R, S AND T NOT SHOWN FOR CLARITY)

RAILING ADJACENT TO SIDEWALK NOTES:

1) END POST DETAILED ABOVE, INTERIOR POST AND APPROACH SLAB END SECTION SIMILAR.
2) FOR THE BRIDGE DECK PLACE BARS 7P1, 7P2 AND 4V WITH THE BOTTOM MAT OF REINFORCEMENT AS SHOWN IN SECTION A-A. FOR THE APPROACH SLABS PLACE BARS 7P1, 7P2 AND 4V WITH 6" EMBEDMENT.
3) ALTERNATE BARS 7P1 (7P4) AND 7P2 (7P5) AND 7P6 AT EACH POST. AT END POSTS 3 EACH (MIN.) REQUIRED, AT INTERMEDIATE POST 6 EACH REQUIRED.
4) REVERSE DIRECTION OF EVERY OTHER BAR 4V1 (4V2) TO MATCH DIRECTION OF BARS 7P1 (7P4) OR 7P2 (7P5).
5) SHIFT DECK AND APPROACH SLAB TRANSVERSE REINFORCEMENT MINIMALLY TO ALLOW PLACEMENT OF BARS 7P & 4V.
6)

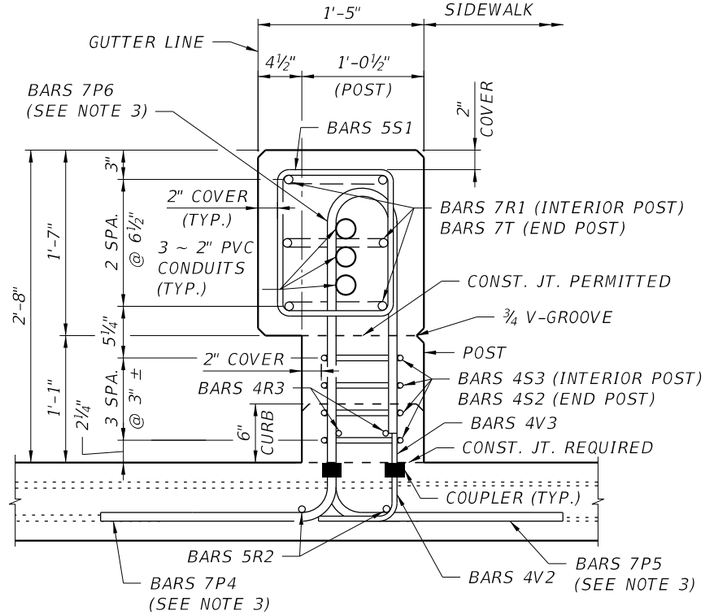

SECTION A-A

STA. 413+36.00 THRU STA. 420+22.00
RIGHT OF ALIGNMENT

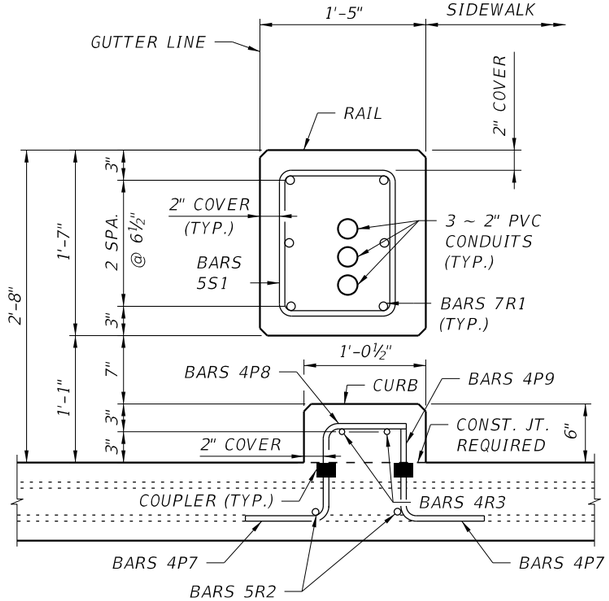

SECTION B-B

STA. 413+36.00 THRU STA. 420+22.00
RIGHT OF ALIGNMENT

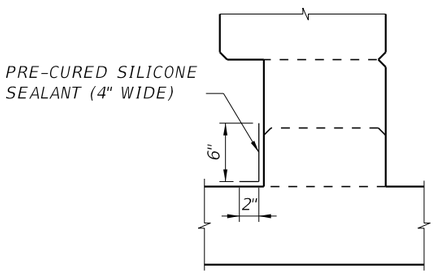

INTERMEDIATEJOINT SEAL NOTES:

1) AT INTERMEDIATE OPEN JOINTS IN CURB SECTIONS, SEAL THE LOWER 6" PORTION OF THE OPEN JOINT WITH PRE-CURED SILICONE SEALANT IN ACCORDANCE WITH SPECIFICATION SECTION 932.
2) APPLY SEALANT PRIOR TO ANY CLASS V FINISH COATING AND REMOVE ALL CURING COMPOUND AND LOOSE MATERIAL FROM THE SURFACE PRIOR TO APPLICATION OF BONDING AGENT.
3) THE COST OF THE PRE-CURED SILICONE SEALANT SHALL BE INCLUDED IN THE CONTRACT UNIT PRICE FOR THE TRAFFIC RAILING.

CROSS REFERENCES:
FOR LOCATIONS OF SECTIONS SEE SHEET B1-121.
FOR REBAR DETAILS AND QUANTITY BREAKDOWN SEE SHEET B1-126.

BRIDGE NO. 124143

REVISIONS					
DATE	BY	DESCRIPTION	DATE	BY	DESCRIPTION

Kisinger Campo & Associates Corp.
201 N. Franklin Street
Suite 400
Tampa, FL 33602
Alfredo Jose Layrisse, PE No. 75610

DRAWN BY: DAA 09-21	
CHECKED BY: AJL 09-21	
DESIGNED BY: DAA 09-21	
CHECKED BY: SKB 09-21	

LEE COUNTY PUBLIC WORKS
DEPARTMENT OF TRANSPORTATION

ROAD NO.	COUNTY	COUNTY PROJECT No
CR 865	LEE	CN160002

SHEET TITLE: 32" CORRAL BARRIER DETAILS (3 OF 6)

REF. DWG. NO.:

PROJECT NAME: ESTERO BLVD. (CR 865) OVER BIG CARLOS PASS

SHEET NO.: B1-123

NOTICE: THE OFFICIAL RECORD OF THIS SHEET IS THE ELECTRONIC FILE DIGITALLY SIGNED AND SEALED UNDER RULE 61G15-23.004, F.A.C.

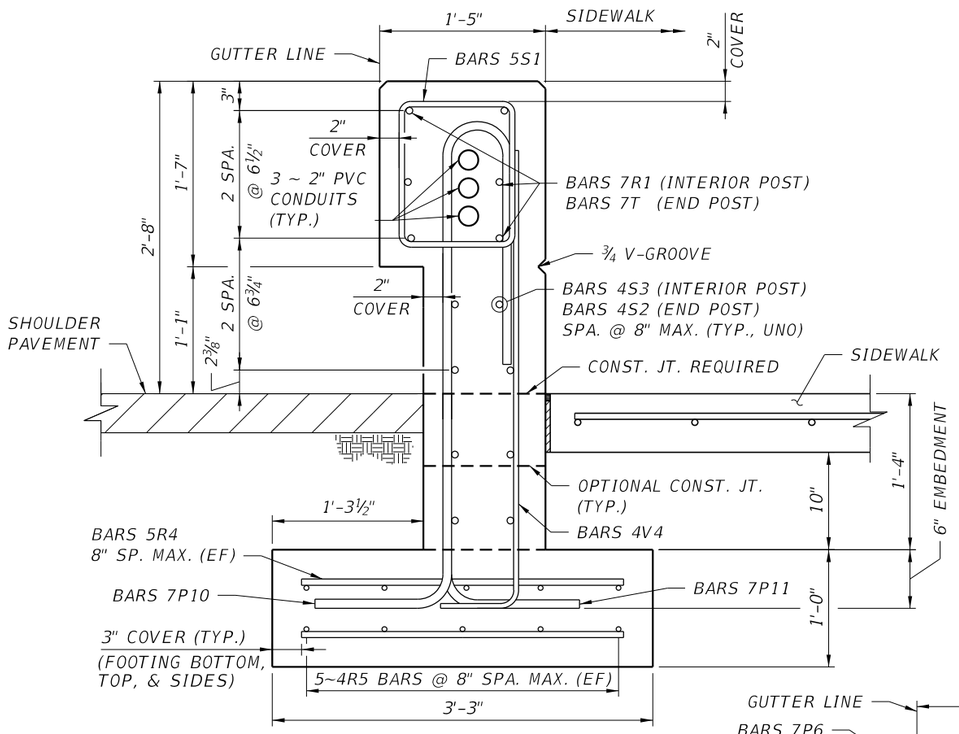

SECTION C-C

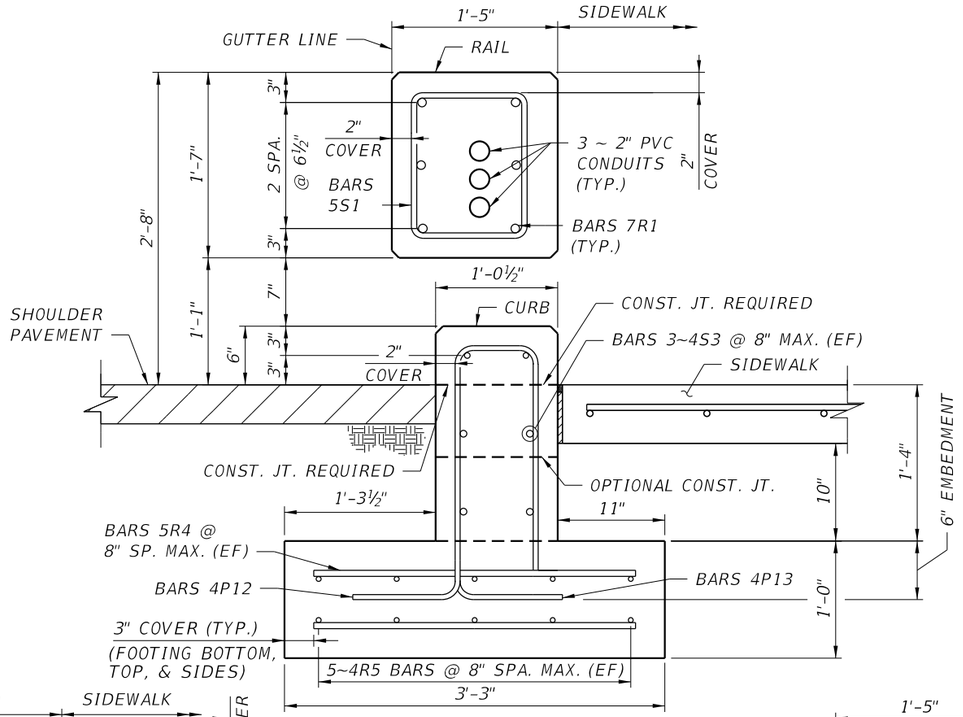

SECTION D-D

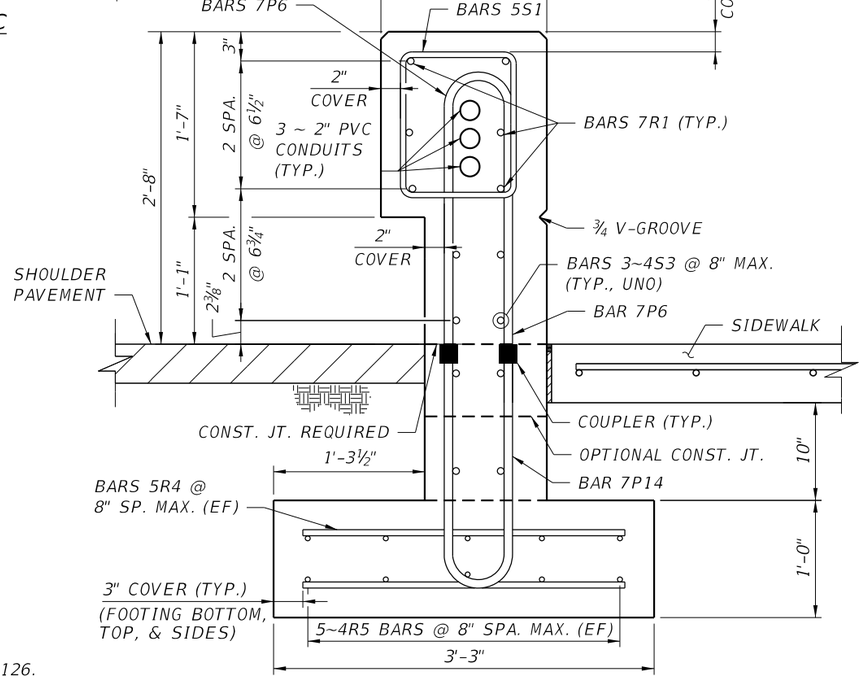

SECTION C-C

STA. 412+69.65 THRU STA. 413+36.00
RIGHT OF ALIGNMENT

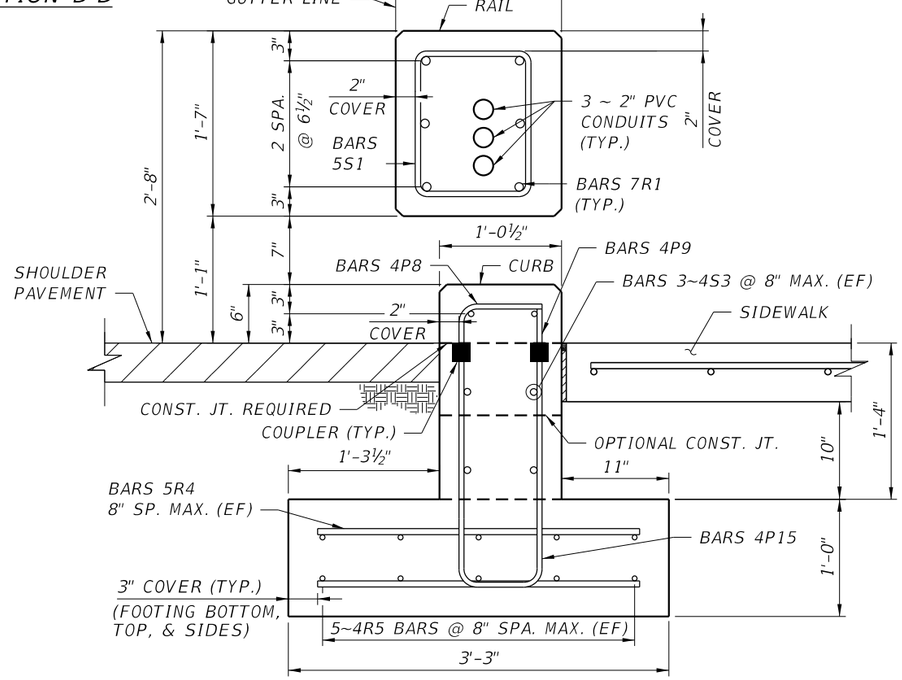

SECTION D-D

STA. 412+69.65 THRU STA. 413+36.00
RIGHT OF ALIGNMENT

CROSS REFERENCES:
FOR LOCATIONS OF SECTIONS SEE SHEET B1-122.
FOR QUANTITIES AND REBAR DETAILS SEE SHEET B1-126.

BRIDGE NO. 124143

NOTICE: THE OFFICIAL RECORD OF THIS SHEET IS THE ELECTRONIC FILE DIGITALLY SIGNED AND SEALED UNDER RULE 61G15-23.004, F.A.C.

REVISIONS					
DATE	BY	DESCRIPTION	DATE	BY	DESCRIPTION

Kisinger Campo & Associates Corp.
201 N. Franklin Street
Suite 400
Tampa, FL 33602
Alfredo Jose Layrisse, PE No. 75610

DRAWN BY:	CHECKED BY:	DESIGNED BY:	CHECKED BY:
DAA 09-21	AJL 09-21	DAA 09-21	SKB 09-21

LEE COUNTY PUBLIC WORKS
DEPARTMENT OF TRANSPORTATION

ROAD NO.	COUNTY	COUNTY PROJECT No
CR 865	LEE	CN160002

SHEET TITLE: 32" CORRAL BARRIER DETAILS (4 OF 6)

REF. DWG. NO.

PROJECT NAME: ESTERO BLVD. (CR 865) OVER BIG CARLOS PASS

SHEET NO. B1-124

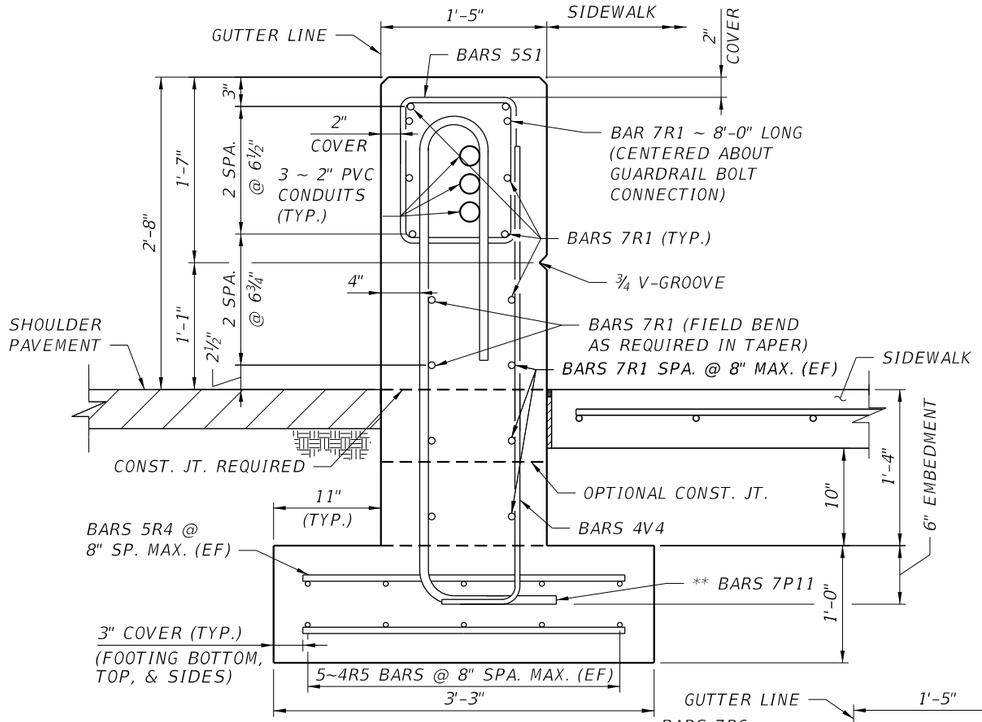

SECTION E-E

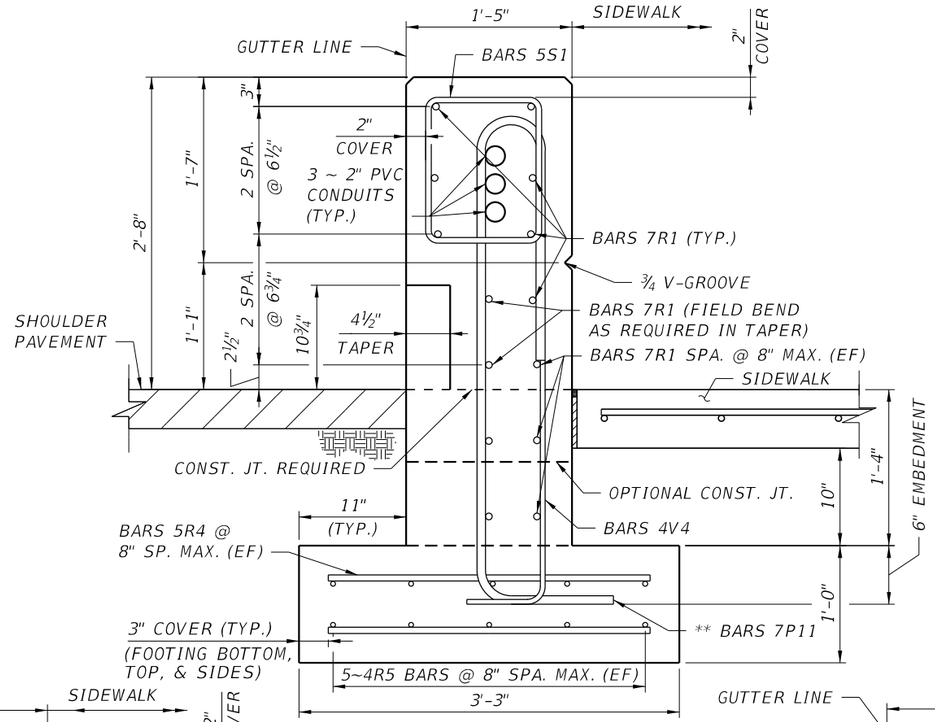

SECTION F-F

** SHIFT BARS 7P11 & 7P16 IN APPROACH ROADWAY AT 3'-0" TAPERS TO MAINTAIN CLEARANCE

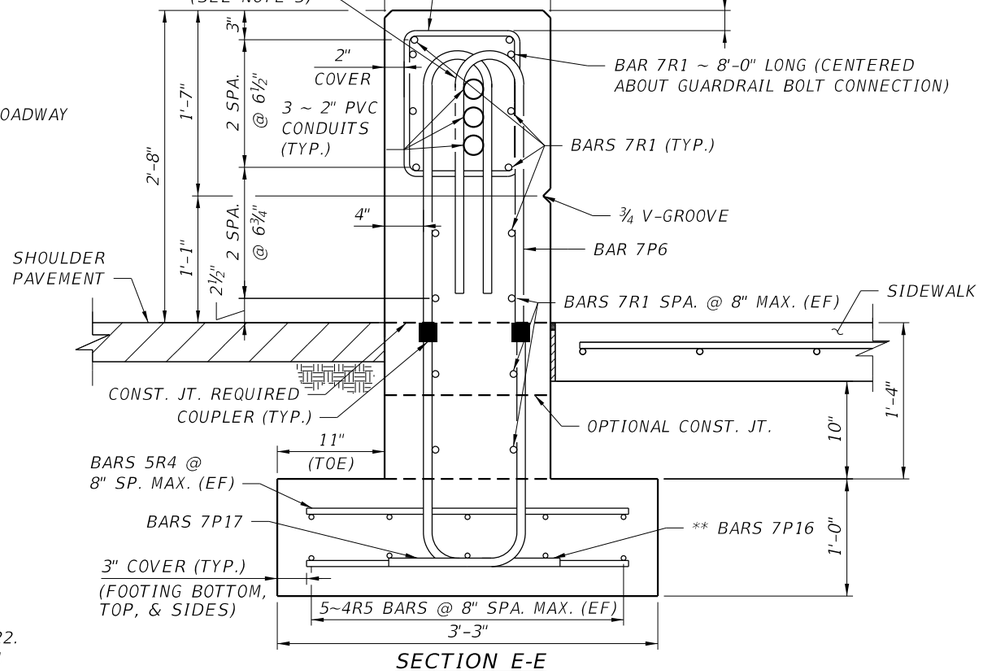

SECTION E-E

STA. 412+69.65 THRU STA. 413+36.00
RIGHT OF ALIGNMENT

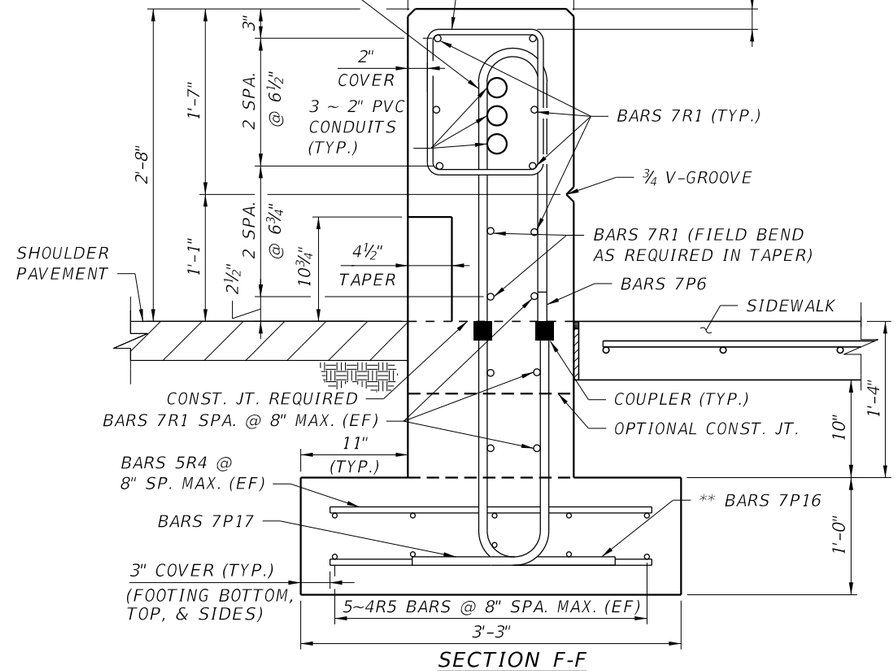

SECTION F-F

STA. 412+69.65 THRU STA. 413+36.00
RIGHT OF ALIGNMENT

CROSS REFERENCES:
FOR LOCATIONS OF SECTIONS SEE SHEET B1-122.
FOR REBAR DETAILS AND QUANTITY BREAKDOWN SEE SHEET B1-126.

BRIDGE NO. 124143

NOTICE: THE OFFICIAL RECORD OF THIS SHEET IS THE ELECTRONIC FILE DIGITALLY SIGNED AND SEALED UNDER RULE 61G15-23.004, F.A.C.

REVISIONS					
DATE	BY	DESCRIPTION	DATE	BY	DESCRIPTION

Kisinger Campo & Associates Corp.
201 N. Franklin Street
Suite 400
Tampa, FL 33602
Alfredo Jose Layrisse, PE No. 75610

DRAWN BY:	CHECKED BY:	DESIGNED BY:	CHECKED BY:
JBH 05-21	AJL 05-21	AJL 05-21	SKB 09-21

LEE COUNTY PUBLIC WORKS
DEPARTMENT OF TRANSPORTATION

ROAD NO.	COUNTY	COUNTY PROJECT No
CR 865	LEE	CN160002

SHEET TITLE: 32" CORRAL BARRIER DETAILS (5 OF 6)

REF. DWG. NO.

PROJECT NAME: ESTERO BLVD. (CR 865) OVER BIG CARLOS PASS

SHEET NO. B1-125

BILL OF REINFORCING STEEL

MARK	SIZE	LENGTH	LB/BAR
P1	7	7'-7"	15.50
P2	7	7'-6"	15.33
P3	4	3'-1"	2.06
P4	7	2'-8"	5.45
P5	7	2'-8"	5.45
P6	7	5'-0"	10.22
P7	4	1'-3"	0.84
P8	4	1'-1"	0.72
P9	4	1'-1"	0.72
P10	7	8'-0"	16.35
P11	7	8'-0"	16.35
P12	4	5'-9"	3.84
P13	4	5'-9"	3.84
P14	7	4'-9"	9.71
P15	4	4'-11"	3.28
P16	7	3'-3"	6.64
P17	7	3'-3"	6.64
R1	7	AS REQD.	2.04 (LB/LF)
R2	5	AS REQD.	1.04 (LB/LF)
R3	4	AS REQD.	0.67 (LB/LF)
R4	5	2'-9"	2.87
R5	4	AS REQD.	0.67 (LB/LF)
* S1	5	5'-6"	5.74
* S2	4	VARIES 6'-3" MIN. 16'-3" MAX.	VARIES 4.18 MIN. 10.86 MAX.
* S3	4	11'-6"	7.68
T	7	11'-7"	23.68
V1	4	3'-2"	2.12
V2	4	1'-3"	0.84
V3	4	2'-1"	1.39
V4	4	4'-8"	3.12

* BEND BARS 5S1, 4S2 & 4S3 AROUND A #3 STIRRUP PIN.

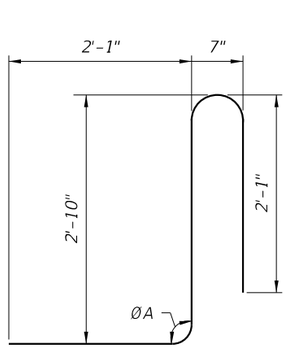

BAR 7P1

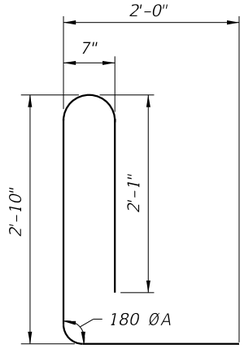

BAR 7P2

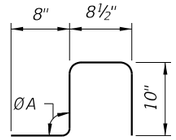

BAR 4P3

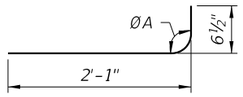

BARS 7P4 & 7P5

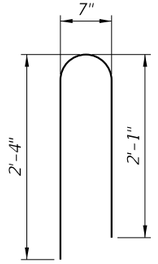

BAR 7P6

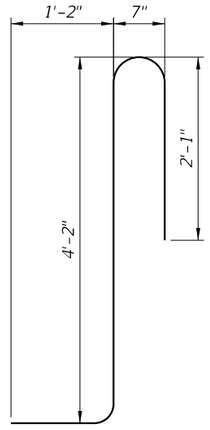

BAR 7P10

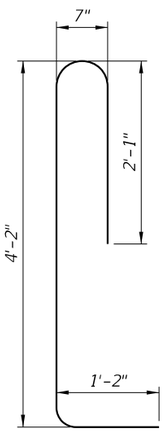

BAR 7P11

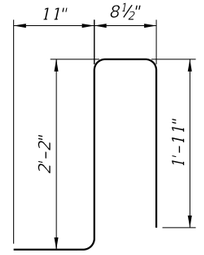

BAR 4P12

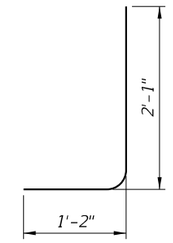

BARS 7P16 & 7P17

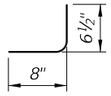

BAR 4P7

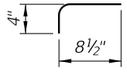

BARS 4P8 & 4P9

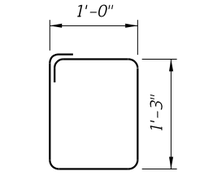

STIRRUP BAR 5S1

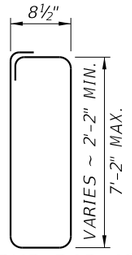

STIRRUP BAR 4S2

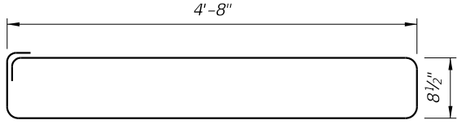

STIRRUP BAR 4S3

BARS 7R1, 5R2, 4V3, 4R3, 5R4 & 4R5

LENGTH AS REQUIRED

BARS 7R1, 5R2, 4V3, 4R3, 5R4 & 4R5

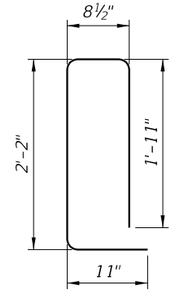

BAR 4P13

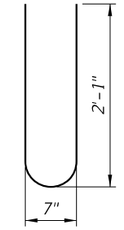

BAR 7P14

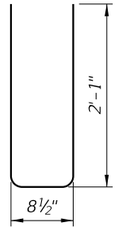

BAR 4P15

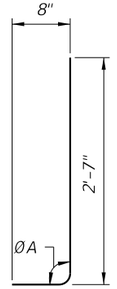

BAR 4V1

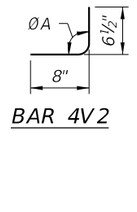

BAR 4V2

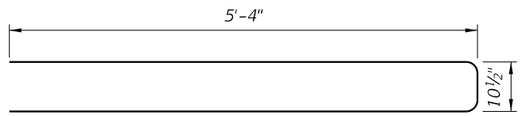

STIRRUP BAR 7T

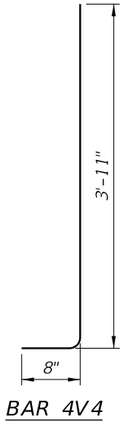

BAR 4V4

REINFORCING STEEL NOTES:

1. ALL BAR DIMENSIONS IN THE BENDING DIAGRAMS ARE OUT TO OUT.
2. ALL REINFORCING STEEL AT THE OPEN JOINTS SHALL HAVE A 2" MINIMUM COVER UNLESS OTHERWISE NOTED.
3. AT CONSTRUCTION JOINTS BARS 7R1, 5R2, 4R3, 5R4 AND 5R5 MAY BE CONTINUOUS OR SPLICED. WHERE BARS ARE SPLICED PROVIDE A 3'-3" MIN. LAP LENGTH FOR BAR 7R1, A 2'-0" MIN. LAP LENGTH FOR BARS 5R2 AND A 1'-3" MIN. LAP LENGTH FOR BARS 4R3.
4. THE SKEW ANGLE FOR BARS 7P3 MAY VARY FROM JOINT TO JOINT AND SIDE TO SIDE, SEE STRUCTURES PLANS, SUPERSTRUCTURE SHEETS FOR DETAILS.
5. BENDING DIAGRAMS FOR BARS 7P4, 7P5, 7P6, 4P7, 4P8, 4P9, 7P14, 7P15, 7P16, 7P17, 4V2, AND 4V3 ARE DETAILED TO THE REQUIRED CONSTRUCTION JOINT. BAR DIMENSIONS AT THE CONSTRUCTION JOINT WILL NEED TO BE ADJUSTED DEPENDING ON THE COUPLERS USED BY THE CONTRACTOR.

ROADWAY OR SIDEWALK CROSS-SLOPE	HIGH SIDE ØA	LOW SIDE ØA
0% TO 2%	90°	90°
2% TO 6%	93°	87°
6% TO 10%	96°	84°

ØA SHALL BE 90° IF CONTRACTOR ELECTS TO PLACE RAILING PERPENDICULAR TO THE DECK.

ESTIMATED TRAFFIC RAILING QUANTITIES

ITEM	CONCRETE QUANTITY (CY)	REBAR QUANTITY (LB)
TYPICAL 10'-0" SECTION W/CURB	1.13	553
APPROACH ROADWAY WITH GUARDRAIL END SECTION	** 0.33 (PER LF)	** 86 (PER LF)

** INCLUDES QUANTITIES IN RETAINING WALL AND FOOTING.

BRIDGE NO. 124143

NOTICE: THE OFFICIAL RECORD OF THIS SHEET IS THE ELECTRONIC FILE DIGITALLY SIGNED AND SEALED UNDER RULE 61G15-23.004, F.A.C.

REVISIONS

DATE	BY	DESCRIPTION	DATE	BY	DESCRIPTION

Kisinger Campo & Associates Corp.
201 N. Franklin Street
Suite 400
Tampa, FL 33602
Alfredo Jose Layrisse, PE No. 75610

DRAWN BY: DAA 09-21
CHECKED BY: AJL 09-21
DESIGNED BY: DAA 09-21
CHECKED BY: SKB 09-21

LEE COUNTY PUBLIC WORKS
DEPARTMENT OF TRANSPORTATION

ROAD NO.	COUNTY	COUNTY PROJECT No
CR 865	LEE	CN160002

SHEET TITLE: 32" CORRAL BARRIER DETAILS (6 OF 6)

REF. DWG. NO.:

PROJECT NAME: ESTERO BLVD. (CR 865) OVER BIG CARLOS PASS

SHEET NO.: B1-126

jhanna 2/24/2022 3:22:16 PM c:\pwworkingdir\kca-pw.bentley.com_kca-pw-01\josh hanna\dms00783\B1MiscDet04.dgn

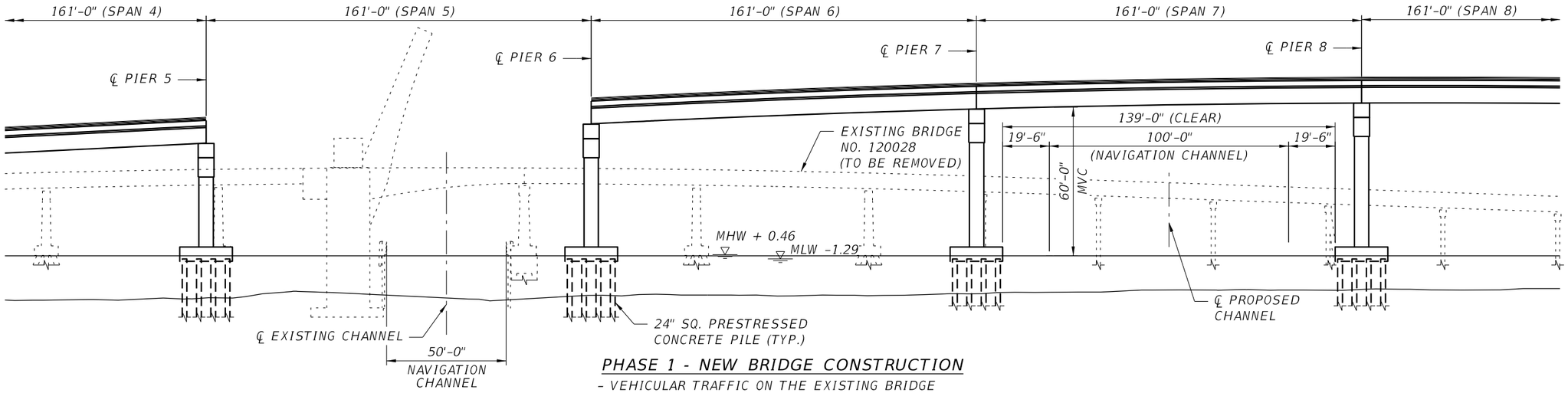

PHASE 1 - NEW BRIDGE CONSTRUCTION

- VEHICULAR TRAFFIC ON THE EXISTING BRIDGE
- MARITIME TRAFFIC THROUGH THE EXISTING CHANNEL

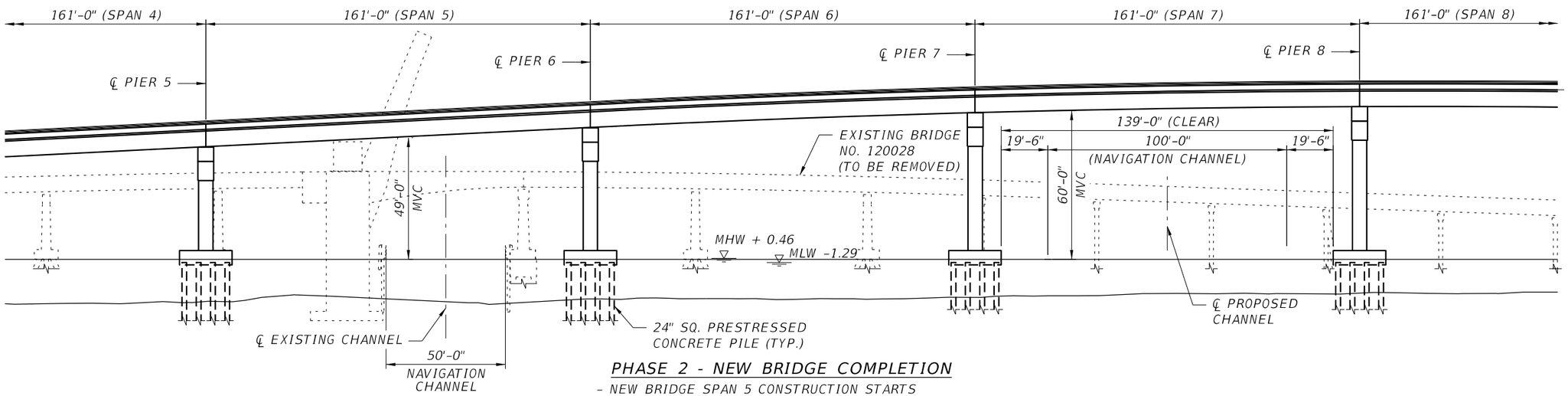

PHASE 2 - NEW BRIDGE COMPLETION

- NEW BRIDGE SPAN 5 CONSTRUCTION STARTS
- VEHICULAR TRAFFIC ON THE EXISTING BRIDGE
- MARITIME TRAFFIC THROUGH THE EXISTING CHANNEL. THE TEMPORARY VERTICAL CLEARANCE IS 49FT

BRIDGE NO. 124143

REVISIONS					
DATE	BY	DESCRIPTION	DATE	BY	DESCRIPTION

Kisinger Campo & Associates Corp.
201 N. Franklin Street
Suite 400
Tampa, FL 33602
Alfredo Jose Layrisse, PE No. 75610

DRAWN BY: JBH 04-21
CHECKED BY: AJL 09-21
DESIGNED BY: AJL 04-21
CHECKED BY: SKB 09-21

LEE COUNTY PUBLIC WORKS
DEPARTMENT OF TRANSPORTATION

ROAD NO.	COUNTY	COUNTY PROJECT No
CR 865	LEE	CN160002

SHEET TITLE: CONSTRUCTION OVER NAVIGATION CHANNEL (1 OF 2)

REF. DWG. NO.

PROJECT NAME: ESTERO BLVD. (CR 865) OVER BIG CARLOS PASS

SHEET NO. B1-127

NOTICE: THE OFFICIAL RECORD OF THIS SHEET IS THE ELECTRONIC FILE DIGITALLY SIGNED AND SEALED UNDER RULE 61G15-23.004, F.A.C.

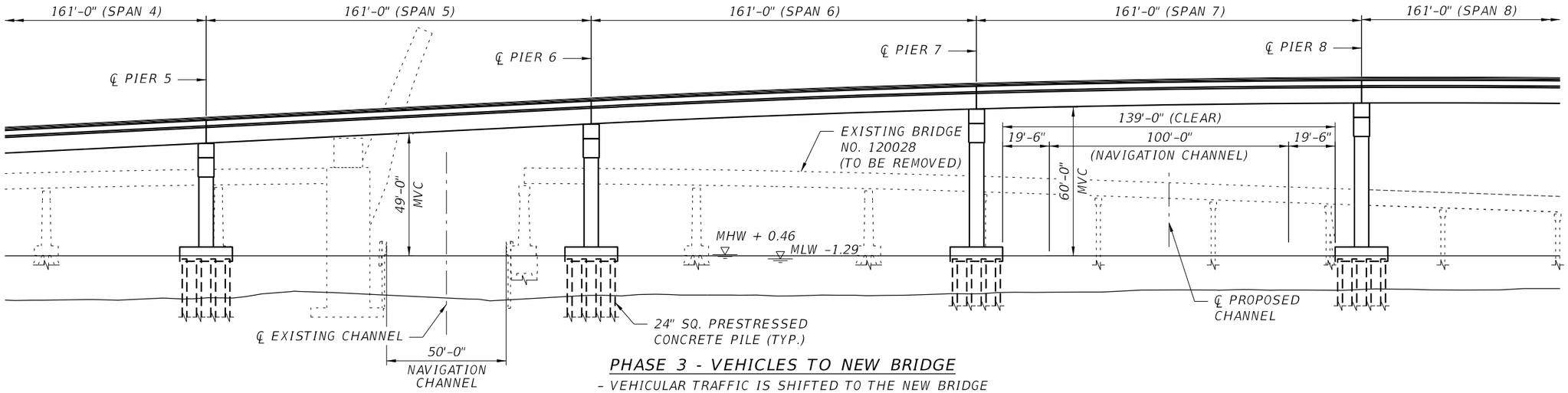

PHASE 3 - VEHICLES TO NEW BRIDGE

- VEHICULAR TRAFFIC IS SHIFTED TO THE NEW BRIDGE
- MARITIME TRAFFIC STILL THROUGH THE EXISTING CHANNEL. VERTICAL CLEARANCE IS 49FT
- DEMOLITION OF THE EXISTING BRIDGE STARTS IN THE NEW CHANNEL AREA.
- DREDGE NEW CHANNEL.

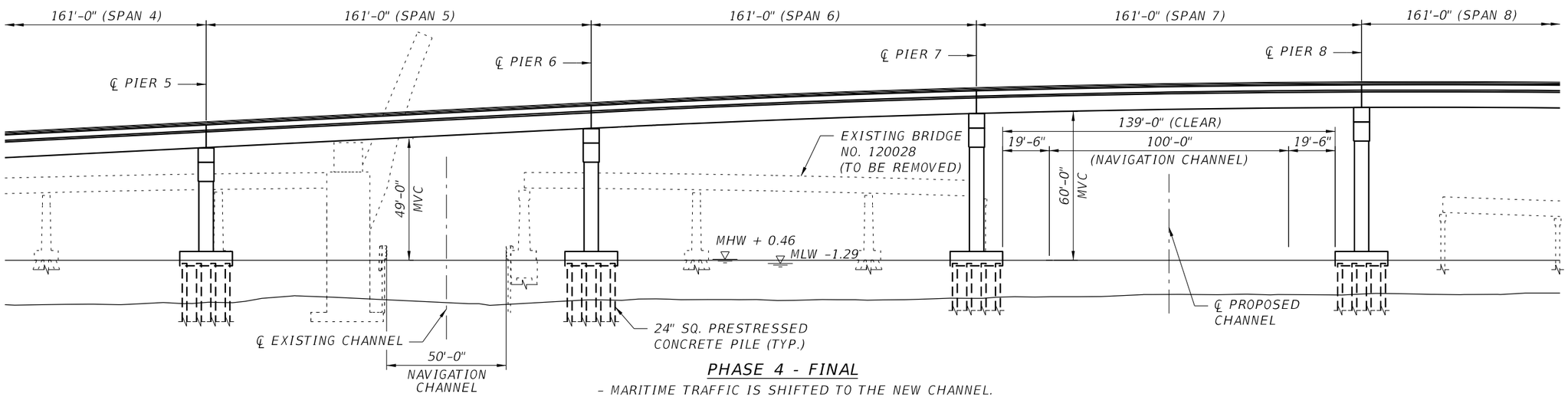

PHASE 4 - FINAL

- MARITIME TRAFFIC IS SHIFTED TO THE NEW CHANNEL. THE NEW VERTICAL CLEARANCE IS 60FT
- DEMOLITION OF THE EXISTING BRIDGE CONTINUES WITH VEHICULAR AND MARITIME TRAFFIC IN FINAL POSITION.

NOTE:

THE TIME FRAME BETWEEN PLACEMENT OF THE NEW BRIDGE SPAN OVER THE EXISTING CHANNEL, AND THE DEMOLOTION OF EXISITNG BRIDGE AT THE NEW CHANNEL AREA IS APPROXIMATELY 3 MONTHS

BRIDGE NO. 124143

REVISIONS					
DATE	BY	DESCRIPTION	DATE	BY	DESCRIPTION

Kisinger Campo & Associates Corp.
201 N. Franklin Street
Suite 400
Tampa, FL 33602
Alfredo Jose Layrisse, PE No. 75610

DRAWN BY:	CHECKED BY:	DESIGNED BY:	CHECKED BY:
JBH 04-21	AJL 09-21	AJL 04-21	SKB 12-19

LEE COUNTY PUBLIC WORKS
DEPARTMENT OF TRANSPORTATION

ROAD NO.	COUNTY	COUNTY PROJECT No
CR 865	LEE	CN160002

SHEET TITLE: CONSTRUCTION OVER NAVIGATION CHANNEL (2 OF 2)

REF. DWG. NO.

PROJECT NAME: ESTERO BLVD. (CR 865) OVER BIG CARLOS PASS

SHEET NO. B1-128

NOTICE: THE OFFICIAL RECORD OF THIS SHEET IS THE ELECTRONIC FILE DIGITALLY SIGNED AND SEALED UNDER RULE 61G15-23.004, F.A.C.

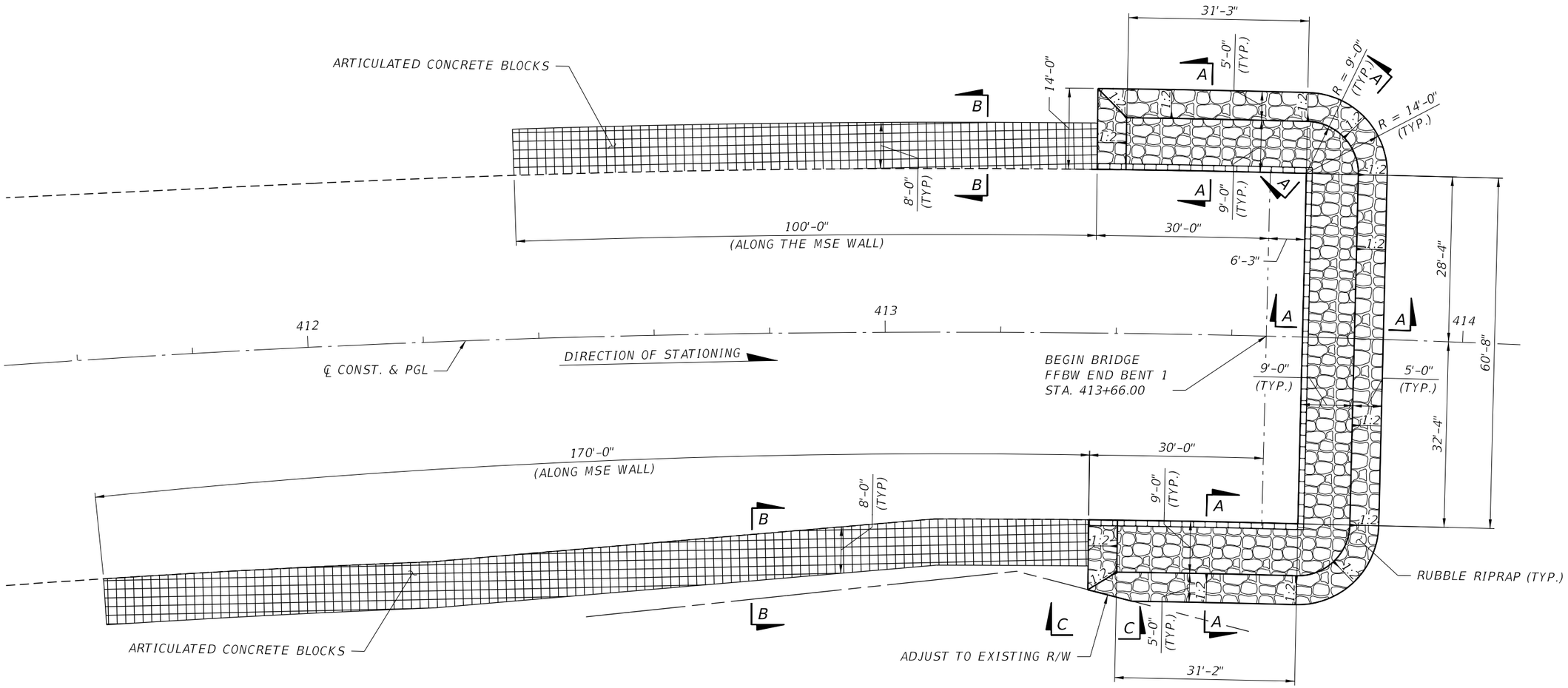

BRIDGE NO. 124143

NOTICE: THE OFFICIAL RECORD OF THIS SHEET IS THE ELECTRONIC FILE DIGITALLY SIGNED AND SEALED UNDER RULE 61G15-23.004, F.A.C.

REVISIONS					
DATE	BY	DESCRIPTION	DATE	BY	DESCRIPTION

Kisinger Campo & Associates Corp.
201 N. Franklin Street
Suite 400
Tampa, FL 33602
Alfredo Jose Layrisse, PE No. 75610

DRAWN BY:	CHECKED BY:	DESIGNED BY:	CHECKED BY:
JBH 09-21	AJL 09-21	AJL 09-21	TJL 09-21

LEE COUNTY PUBLIC WORKS
DEPARTMENT OF TRANSPORTATION

ROAD NO.	COUNTY	COUNTY PROJECT No
CR 865	LEE	CN160002

SHEET TITLE: SLOPE PROTECTION DETAILS (1 OF 2)

REF. DWG. NO.:

PROJECT NAME: ESTERO BLVD. (CR 865) OVER BIG CARLOS PASS

SHEET NO.: B1-129

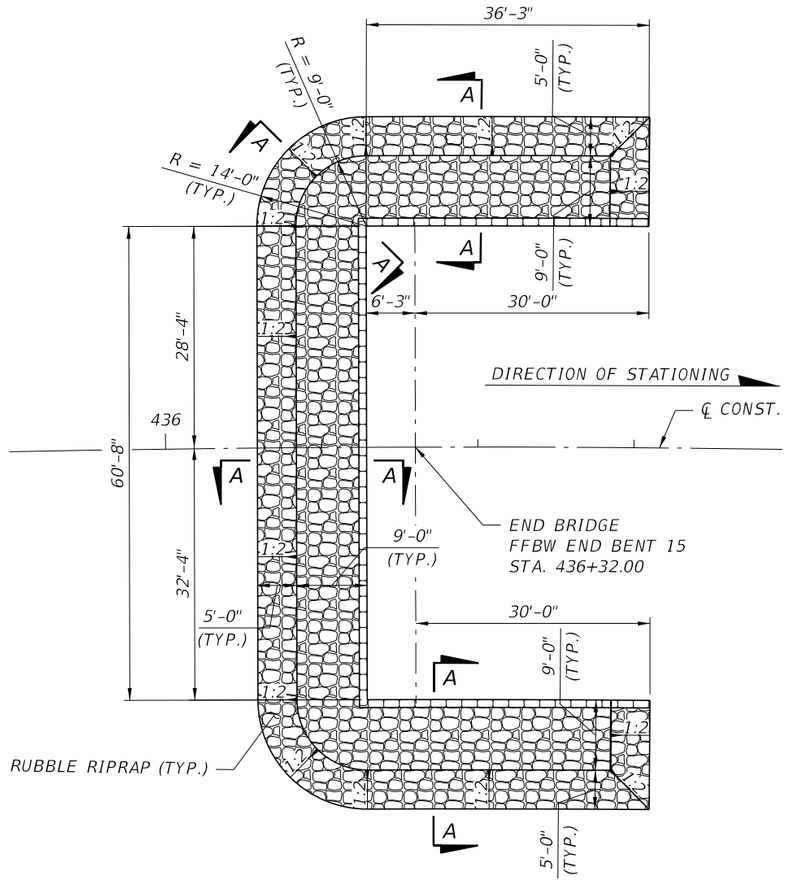

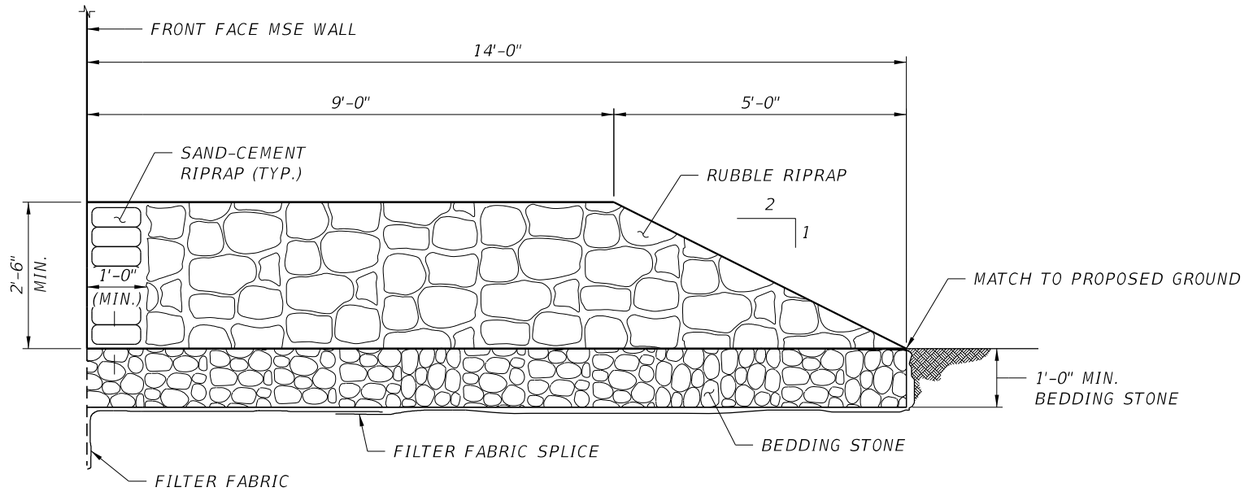

SECTION A-A

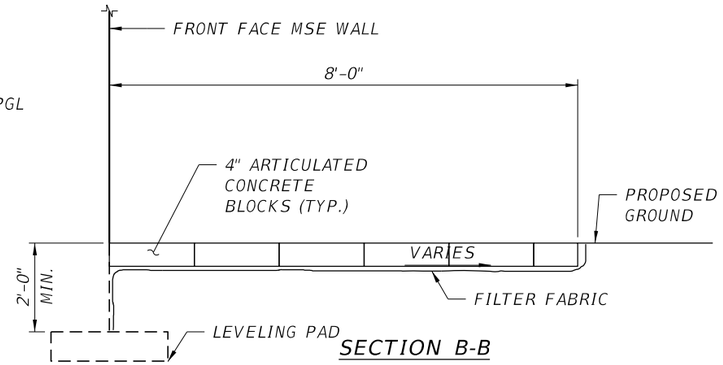

SECTION B-B

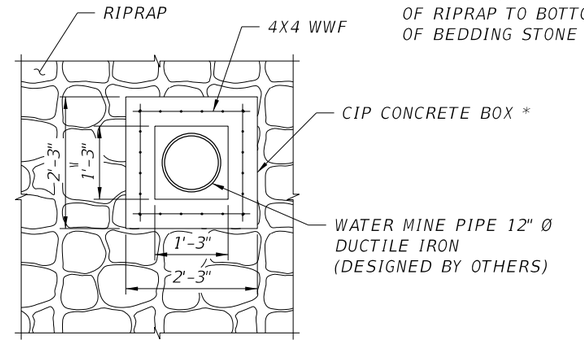

* EXTEND BOX FROM TOP OF RIPRAP TO BOTTOM OF BEDDING STONE

WATER MAIN PIPE PROTECTION THROUGH RIPRAP

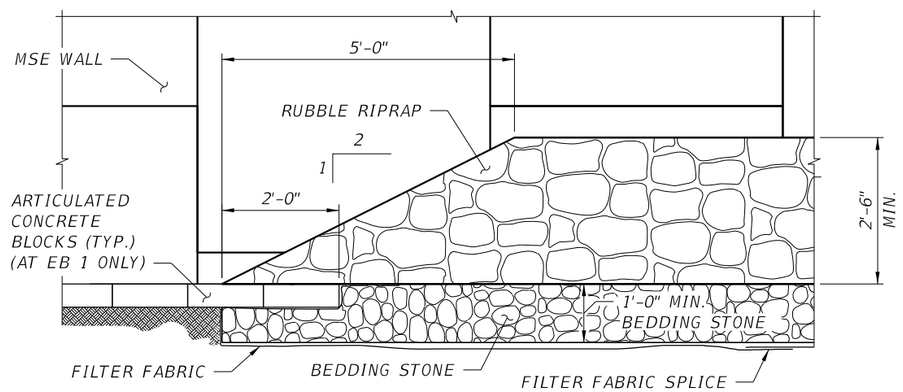

SECTION C-C

BRIDGE NO. 124143

NOTICE: THE OFFICIAL RECORD OF THIS SHEET IS THE ELECTRONIC FILE DIGITALLY SIGNED AND SEALED UNDER RULE 61G15-23.004, F.A.C.

REVISIONS					
DATE	BY	DESCRIPTION	DATE	BY	DESCRIPTION

Kisinger Campo & Associates Corp.
201 N. Franklin Street
Suite 400
Tampa, FL 33602
Alfredo Jose Layrisse, PE No. 75610

DRAWN BY:	CHECKED BY:	DESIGNED BY:	CHECKED BY:
JBH 09-21	AJL 09-21	AJL 09-21	TJL 09-21

LEE COUNTY PUBLIC WORKS
DEPARTMENT OF TRANSPORTATION

ROAD NO.	COUNTY	COUNTY PROJECT No
CR 865	LEE	CN160002

SHEET TITLE: SLOPE PROTECTION DETAILS (2 OF 2)

REF. DWG. NO.:

PROJECT NAME: ESTERO BLVD. (CR 865) OVER BIG CARLOS PASS

SHEET NO.: B1-130

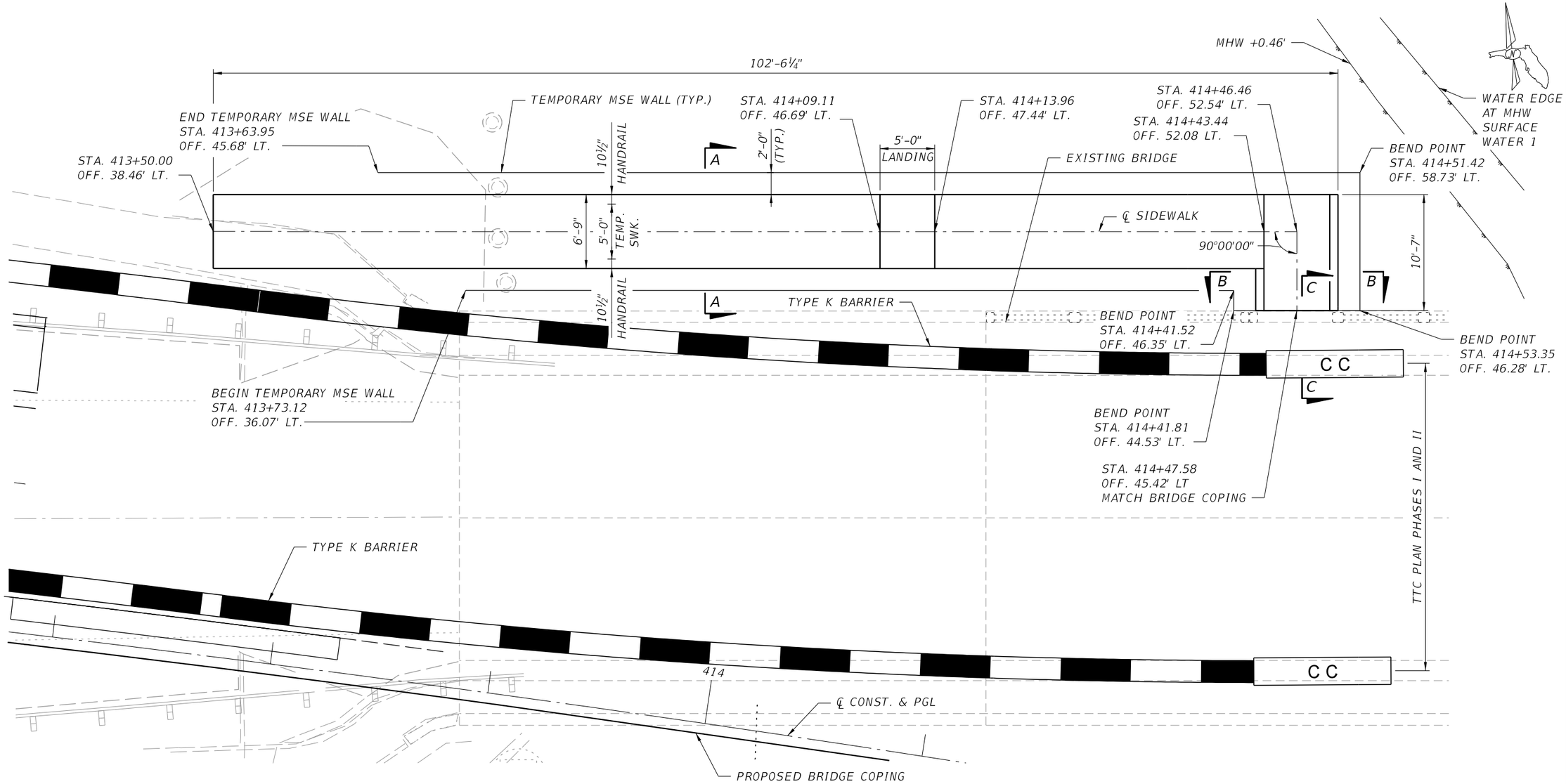

PLAN

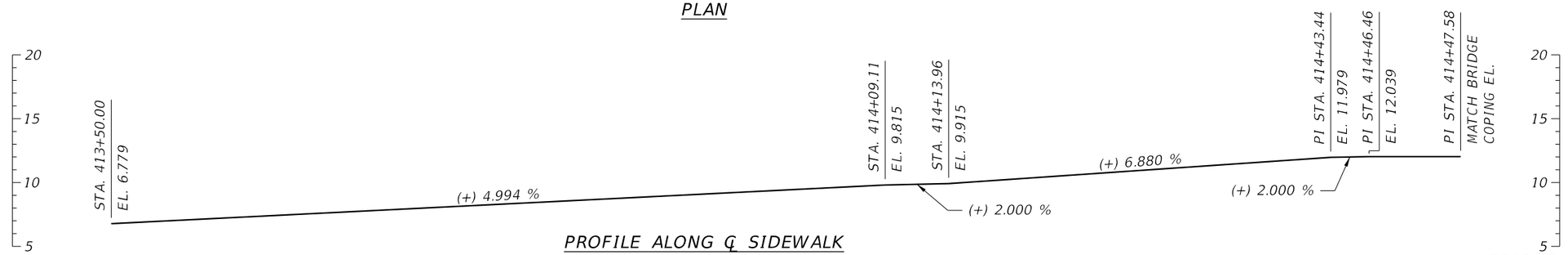

PROFILE ALONG ℄ SIDEWALK

BRIDGE NO. 124143

NOTICE: THE OFFICIAL RECORD OF THIS SHEET IS THE ELECTRONIC FILE DIGITALLY SIGNED AND SEALED UNDER RULE 61G15-23.004, F.A.C.

REVISIONS					
DATE	BY	DESCRIPTION	DATE	BY	DESCRIPTION

Kisinger Campo & Associates Corp.
201 N. Franklin Street
Suite 400
Tampa, FL 33602
Alfredo Jose Layrisse, PE No. 75610

DRAWN BY:	CHECKED BY:	DESIGNED BY:	CHECKED BY:
JBH 05-21	AJL 05-21	KL 05-21	SKB 12-19

LEE COUNTY PUBLIC WORKS
DEPARTMENT OF TRANSPORTATION

ROAD NO.	COUNTY	COUNTY PROJECT No
CR 865	LEE	CN160002

SHEET TITLE: TEMPORARY SIDEWALK (1 OF 3)

REF. DWG. NO.

PROJECT NAME: ESTERO BLVD. (CR 865) OVER BIG CARLOS PASS

SHEET NO. B1-131

jhanna 2/24/2022 3:22:44 PM c:\pwworkingdir\kca-pw.bentley.com_kca-pw-01\josh hanna\dms00783\B1SidewalkDet01.dgn

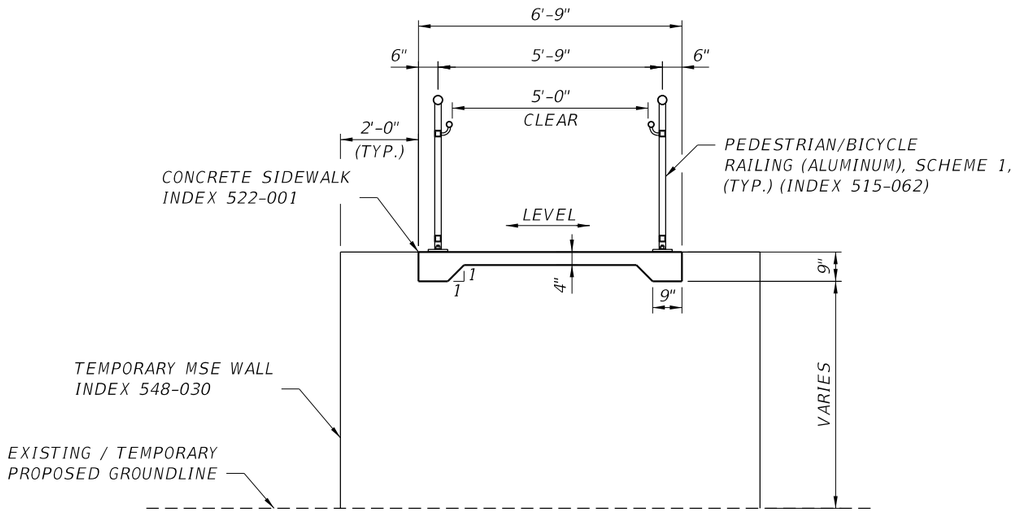

SECTION A-A

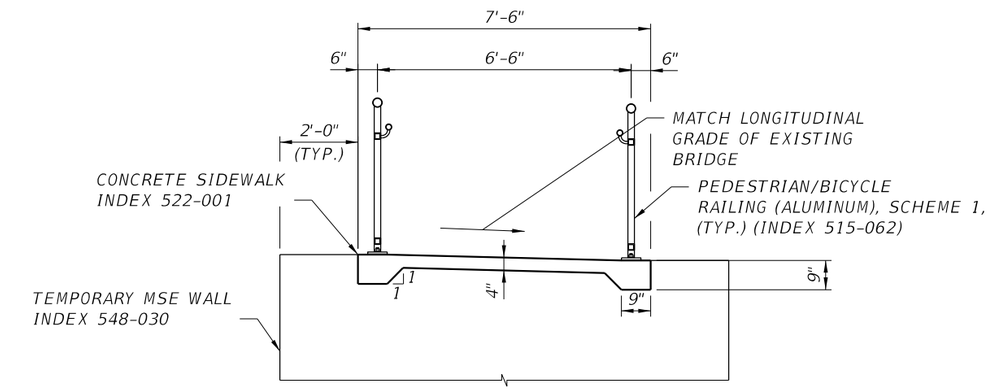

SECTION B-B

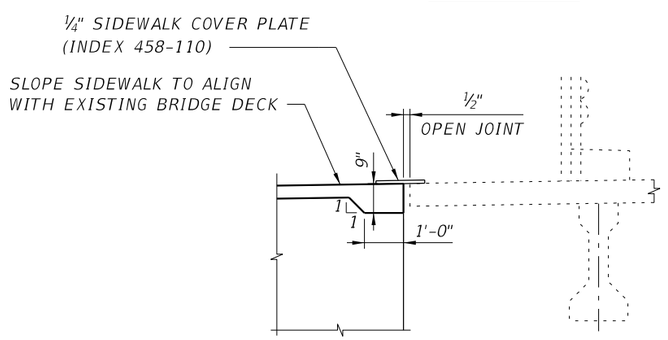

SECTION C-C

TEMPORARY MSE RETAINING WALL SYSTEM DATA TABLES

GEOTECHNICAL INFORMATION						
Temporary MSE Wall 1	Reinforced Soil & Random Backfill	Loose Sand w/ Silt	Med. Dense Sand w/ Silt	Loose Sand w/ Silt	Very Dense Silty Sand	Weathered Limestone/Caprock
Depth Below Existing Ground Line (ft.)	——	0-6	6-13	13-28	28-33	33-40
Effective Unit Weight (pcf)	105	42.6	47.6	42.6	62.6	52.6
Cohesion (psf)	——	——	——	——	——	——
Internal Friction Angle	30	29	30	29	34	38

NOTE:
If the unit weight and/or internal friction angle of the fill proposed by the Contractor differs from that shown above, the Project Engineer will contact both the District Geotechnical Engineer and the Wall Designer for a possible redesign.

RETAINING WALL VARIABLES				Table Date 07-01-13
Wall No.	Wall Settlement			Air Contaminants Classification
	Long Term Settlement (in.)	Short Term Settlement (in.)	Differential Settlement (%) (ft./100ft.)	
1	<0.5	0.5-1.0	0.05	HIGH

NOTES:
1. Design walls for the settlements noted in the table.
2. Long term settlement is measured from the beginning of wall construction through the service life of wall.
3. Short term settlement is measured from the beginning of wall construction.

SOIL REINFORCEMENT LENGTHS FOR EXTERNAL STABILITY										Table Date 1-01-11	
Wall No. 1	Wall Height (ft.)	≤8	9	10	11						
	Reinforcement Length (ft.)	9	10	11	12						
	Factored Bearing Resistance (psf)	2,143	2,020	2,214	2,244						

NOTES:
1. The reinforcement strap lengths shown above are the minimum lengths required for external stability. The reinforcement lengths used in the construction of the retaining walls will be the longer of that required for external or internal stability (determined by proprietary wall companies).
2. The Factored Bearing Resistances shown above are the critical (lowest) values from all the load cases analyzed using LRFD methodology.

NOTES:

1. See the Approved Products List for approved Wall Systems (FDOT Wall Type 3).
2. See Standard Plans Index 548-030 for General Notes and Details.

BRIDGE NO. 124143

NOTICE: THE OFFICIAL RECORD OF THIS SHEET IS THE ELECTRONIC FILE DIGITALLY SIGNED AND SEALED UNDER RULE 61G15-23.004, F.A.C.

REVISIONS

DATE	BY	DESCRIPTION	DATE	BY	DESCRIPTION

Kisinger Campo & Associates Corp.
201 N. Franklin Street
Suite 400
Tampa, FL 33602
Alfredo Jose Layrisse, PE No. 75610

DRAWN BY: JBH 05-21
CHECKED BY: AJL 05-21
DESIGNED BY: KL 05-21
CHECKED BY: SKB 12-19

LEE COUNTY PUBLIC WORKS
DEPARTMENT OF TRANSPORTATION

ROAD NO.	COUNTY	COUNTY PROJECT No
CR 865	LEE	CN160002

SHEET TITLE: TEMPORARY SIDEWALK (2 OF 3)

REF. DWG. NO.

PROJECT NAME: ESTERO BLVD. (CR 865) OVER BIG CARLOS PASS

SHEET NO. B1-132

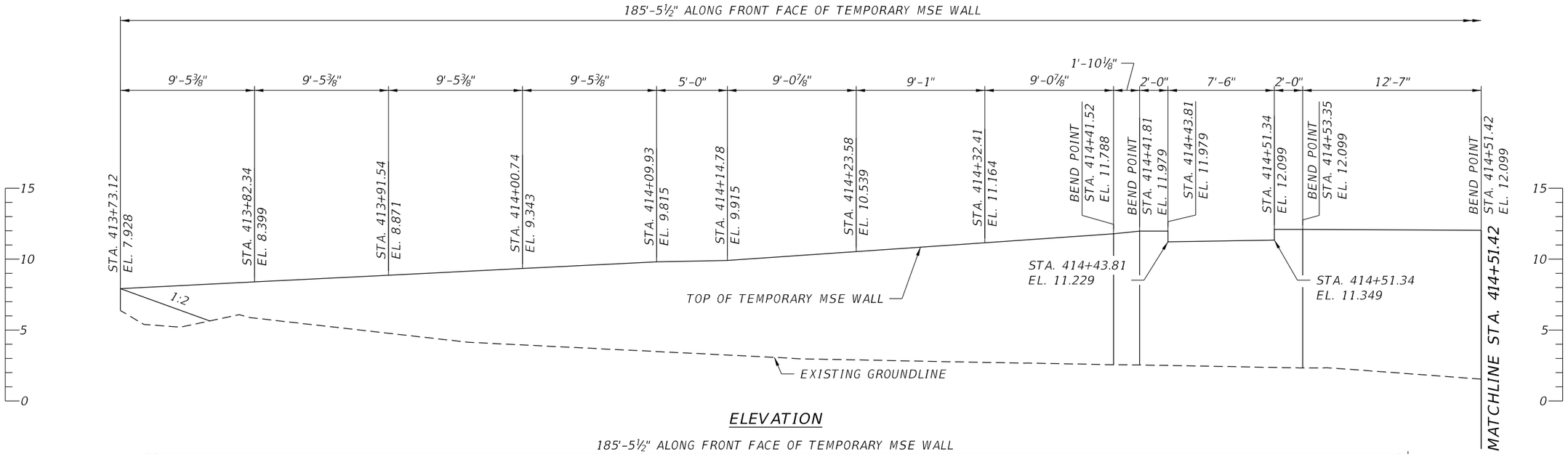

ELEVATION

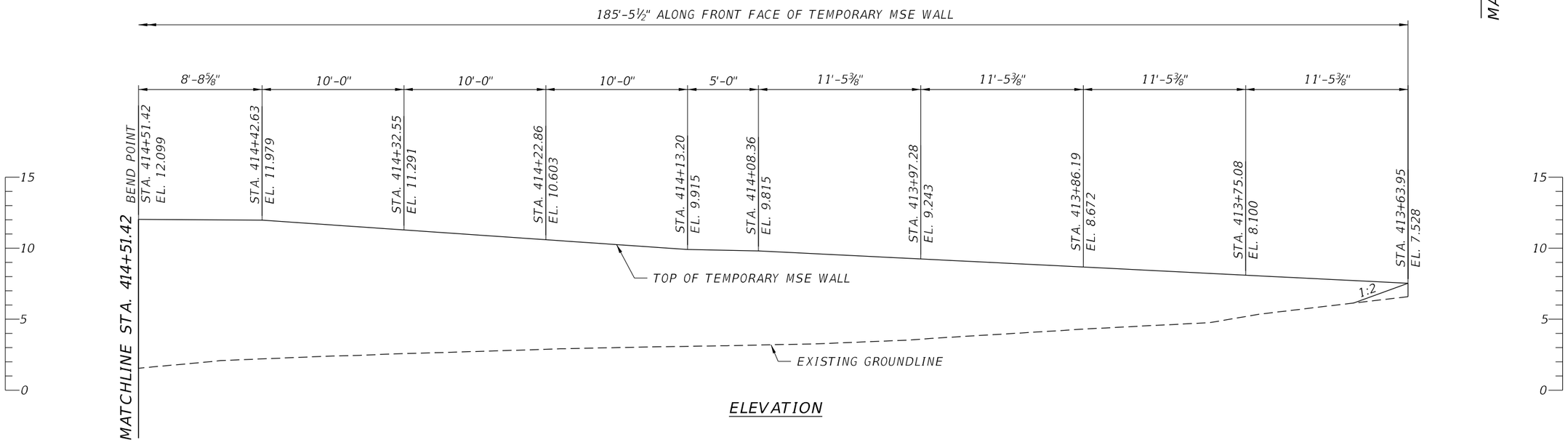

ELEVATION

BRIDGE NO. 124143

NOTICE: THE OFFICIAL RECORD OF THIS SHEET IS THE ELECTRONIC FILE DIGITALLY SIGNED AND SEALED UNDER RULE 61G15-23.004, F.A.C.

REVISIONS					
DATE	BY	DESCRIPTION	DATE	BY	DESCRIPTION

Kisinger Campo & Associates Corp.
201 N. Franklin Street
Suite 400
Tampa, FL 33602
Alfredo Jose Layrisse, PE No. 75610

DRAWN BY: JBH 10-21	
CHECKED BY: BAH 10-21	
DESIGNED BY: BAH 10-21	
CHECKED BY: SKB 10-21	

LEE COUNTY PUBLIC WORKS
DEPARTMENT OF TRANSPORTATION

ROAD NO.	COUNTY	COUNTY PROJECT No
CR 865	LEE	CN160002

SHEET TITLE: TEMPORARY SIDEWALK (3 OF 3)

REF. DWG. NO.:

PROJECT NAME: ESTERO BLVD. (CR 865) OVER BIG CARLOS PASS

SHEET NO.: B1-133

jhanna 2/24/2022 3:22:53 PM c:\pwworkingdir\kca-pw.bentley.com_kca-pw-01\josh hanna\dms00783\B1SidewalkDet03.dgn

BILL OF MATERIALS FOR ENTIRE FENDER SYSTEM				
MARK	SIZE	NO. REQ'D.	REINFORCED/ NON-REINFORCED	CUTTING DIAGRAM
G-2	6"x6"	4	NON-REINFORCED	3'-4"
H-1	4"x4"	4	REINFORCED	15'-3"
H-2	2"x6"	4	NON-REINFORCED	1'-2"
H-3	4"x4"	12	NON-REINFORCED	0'-6"

PLASTIC LUMBER MATERIALS SHALL BE CONSIDERED INCIDENTAL TO CLEARANCE GAUGE SIGN COST.

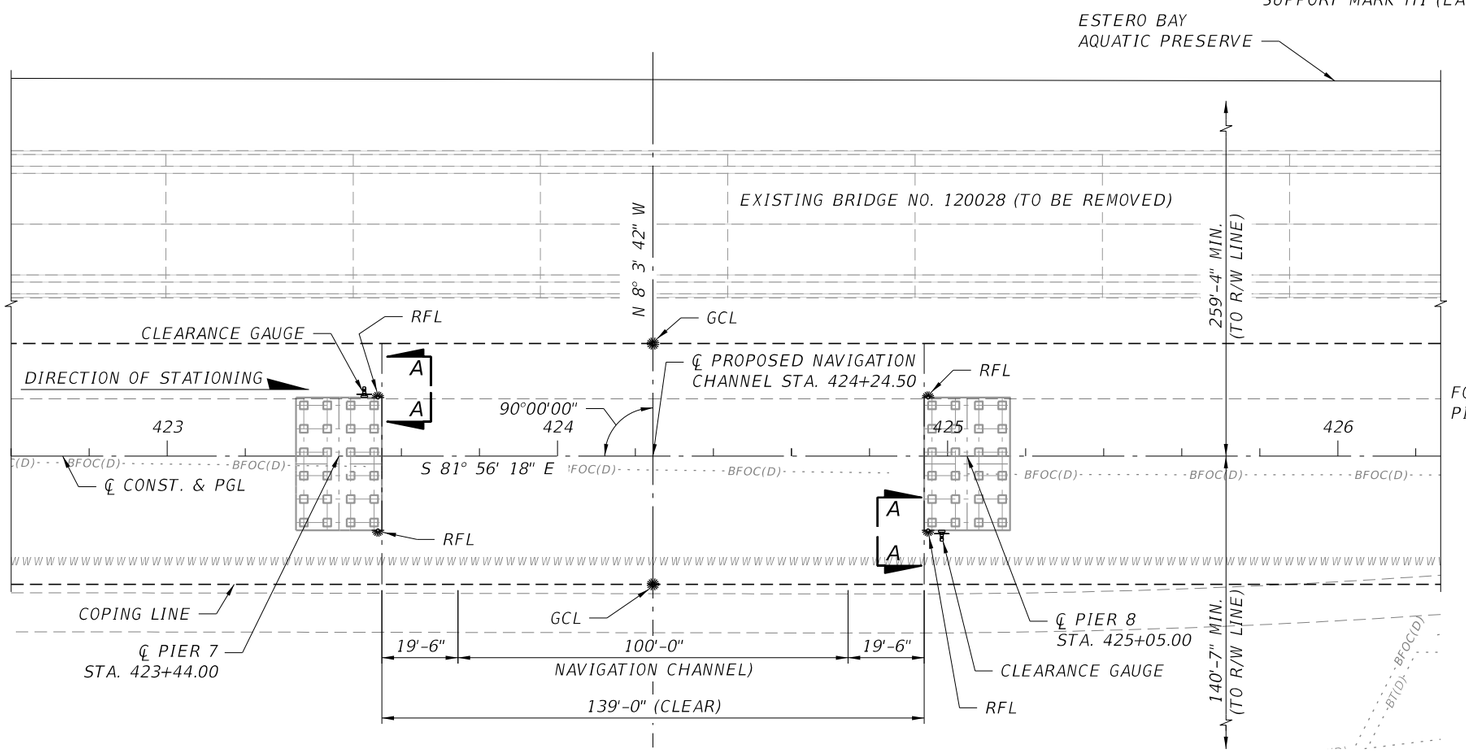

PLAN

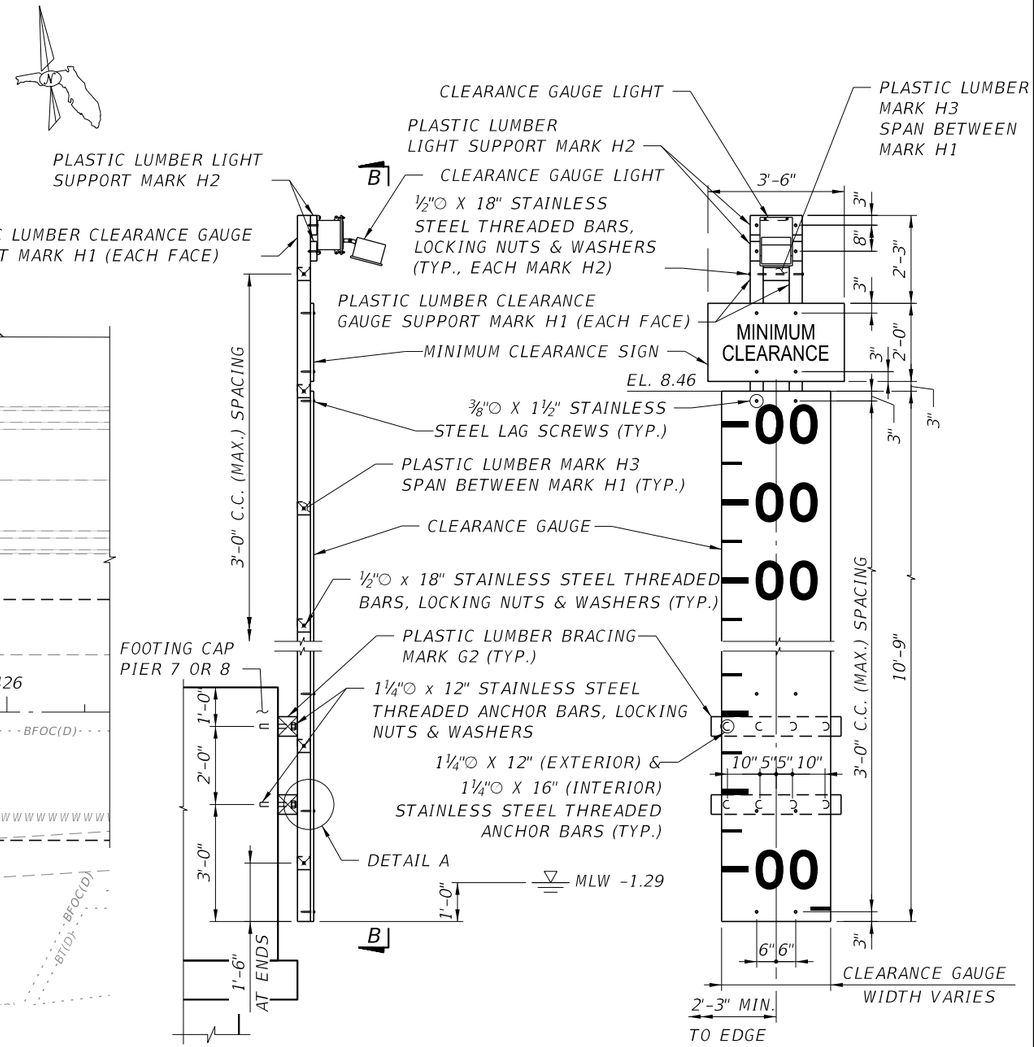

VIEW A-A

VIEW B-B
(SOME CLEARANCE GAUGE NUMBERS NOT SHOWN FOR CLARITY)

LEGEND:
RFL - RED FENDER/PIER LIGHT (MOUNTED ON FOOTING)
GCL - GREEN CLEARANCE LIGHT (MOUNTED ON SUPERSTRUCTURE)

ANCHOR ROD NOTES:
1. USE TYPE HSHV ADHESIVE BONDING MATERIALS IN ACCORDANCE WITH FDOT SPECIFICATIONS SECTION 937.
2. INSTALL IN ACCORDANCE WITH FDOT SPECIFICATIONS SECTION 416.
3. FURNISH HARDWARE IN ACCORDANCE WITH STANDARD INDEX 471-030.

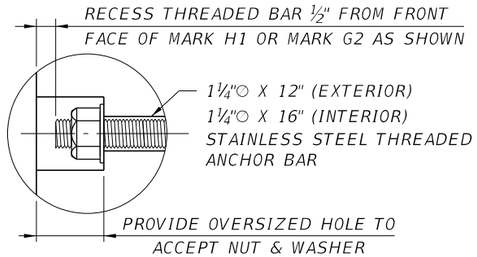

DETAIL "A"

CLEARANCE GAUGE DETAILS
(NAVIGATION LIGHT NOT SHOWN FOR CLARITY)

NOTE:
1. REFERENCE STANDARD INDEX 471-030 FOR ADDITIONAL DETAILS ABOUT THE CLEARANCE GAUGE.
2. REFERENCE STANDARD INDEX 510-001 FOR ADDITIONAL DETAILS ABOUT THE NAVIGATION LIGHTS.
3. CLEARANCE GAUGE LIGHT TO COMPLY WITH SEA TURTLE NESTING HABITAT GUIDELINES.
4. PROVIDE CLEARANCE GAUGES AND MINIMUM CLEARANCE SIGNS IN ACCORDANCE WITH SPECIFICATIONS SECTION 700 AND THAT ARE A MINIMUM OF 0.08 INCHES THICK. INCLUDE COMPLETE DETAILS OF THE CLEARANCE GAUGES, MINIMUM CLEARANCE SIGNS AND THEIR ASSOCIATED SUPPORT/ATTACHMENT SYSTEMS IN THE SHOP DRAWINGS.

BRIDGE NO. 124143

REVISIONS					
DATE	BY	DESCRIPTION	DATE	BY	DESCRIPTION

Kisinger Campo & Associates Corp.
201 N. Franklin Street
Suite 400
Tampa, FL 33602
Alfredo Jose Layrisse, PE No. 75610

DRAWN BY:	JBH 05-21
CHECKED BY:	BAH 02-22
DESIGNED BY:	JHJ 02-22
CHECKED BY:	BAH 02-22

LEE COUNTY PUBLIC WORKS
DEPARTMENT OF TRANSPORTATION

ROAD NO.	COUNTY	COUNTY PROJECT No
CR 865	LEE	CN160002

SHEET TITLE: NAVIGATION CHANNEL DETAILS

REF. DWG. NO.:

PROJECT NAME: ESTERO BLVD. (CR 865) OVER BIG CARLOS PASS

SHEET NO.: B1-134

NOTICE: THE OFFICIAL RECORD OF THIS SHEET IS THE ELECTRONIC FILE DIGITALLY SIGNED AND SEALED UNDER RULE 61G15-23.004, F.A.C.

MARK SIZE	MARK DES	LENGTH FT	LENGTH IN	NO BARS	TYP BAR	STY A	STY G	B FT	B IN	B FR	C FT	C IN	C FR	D FT	D IN	D FR	E FT	E IN	E FR	F FT	F IN	F FR	H FT	H IN	H FR	J FT	J IN	J FR	K FT	K IN	K FR	N NO	Ø ANG
LOCATION END BENT 1 PHASE II																				NO. REQUIRED = 1													
6	D01	5-	0	8	23			2-	1		0-	3		2-	1																		
5	E02	8-	5	132	1			8-	5																								
4	E03	33-	3	20	1			33-	3																								
8	E05	33-	4	9	1			33-	4																								
8	E07	6-	9	8	18	3	3	4-	1																								
8	E09	3-	8	2	17	3		2-	4																								
6	E11	3-	1	2	17	3		2-	0	1/2																							
6	E12	33-	3	4	1			33-	3																								
5	E14	12-	9	29	4	4	4	2-	3	1/2	3-	7																					
5	E15	9-	3	15	5			2-	3	1/2	3-	7		0-	6	1/2	0-	6	1/2														
5	E16	6-	6	4	11			3-	5	3/4	1-	6		1-	6																		
4	E17	4-	2	10	17	3		3-	6																								
4	E18	2-	7	1	1			2-	7																								
5	E19	9-	3	4	1			9-	3																								
5	E20	9-	1	1	1			9-	1																								
5	E30	6-	7	30	11			2-	7		2-	0		2-	0																		
5	E31	6-	10	25	11			2-	10		2-	0		2-	0																		
LOCATION END BENT 1 PHASE III																				NO. REQUIRED = 1													
6	D01	5-	0	7	23			2-	1		0-	3		2-	1																		
5	E02	8-	5	112	1			8-	5																								
4	E04	27-	9	20	1			27-	9																								
8	E06	27-	9	9	1			27-	8	1/2																							
8	E08	7-	2	6	18	3	3	4-	6																								
8	E10	3-	6	2	17	3		2-	1	1/2																							
6	E11	3-	1	2	17	3		2-	0	1/2																							
6	E13	27-	9	4	1			27-	8	1/2																							
5	E14	12-	9	21	4	4	4	2-	3	1/2	3-	7																					
5	E15	9-	3	8	5			2-	3	1/2	3-	7		0-	6	1/2	0-	6	1/2														
5	E16	6-	6	4	11			3-	5	3/4	1-	6		1-	6																		
4	E17	4-	2	10	17	3		3-	6																								
4	E18	2-	7	1	1			2-	7																								
5	E19	9-	3	4	1			9-	3																								
5	E20	9-	1	1	1			9-	1																								
5	E21	5-	6	12	1			5-	6																								
5	E30	6-	7	24	11			2-	7		2-	0		2-	0																		
5	E31	6-	10	20	11			2-	10		2-	0		2-	0																		

NOTE:
WORK THIS SHEET WITH INDEX 415-011.

BRIDGE NO. 124143

NOTICE: THE OFFICIAL RECORD OF THIS SHEET IS THE ELECTRONIC FILE DIGITALLY SIGNED AND SEALED UNDER RULE 61G15-23.004, F.A.C.

REVISIONS

DATE	BY	DESCRIPTION	DATE	BY	DESCRIPTION

Kisinger Campo & Associates Corp.
201 N. Franklin Street
Suite 400
Tampa, FL 33602
Alfredo Jose Layrisse, PE No. 75610

DRAWN BY: JHJ 10-21
CHECKED BY: BAH 10-21
DESIGNED BY: JHJ 10-21
CHECKED BY: BAH 10-21

LEE COUNTY PUBLIC WORKS
DEPARTMENT OF TRANSPORTATION

ROAD NO.	COUNTY	COUNTY PROJECT No
CR 865	LEE	CN160002

SHEET TITLE: REINFORCING BAR LIST (1 OF 13)

REF. DWG. NO.:

PROJECT NAME: ESTERO BLVD. (CR 865) OVER BIG CARLOS PASS

SHEET NO.: B1-135

MARK		LENGTH	NO	TYP	STY		B	C	D	E	F	H	J	K	N	Ø
SIZE	DES	FT IN	BARS	BAR	A	G	FT IN FR	FT IN FR	FT IN FR	FT IN FR	FT IN FR	FT IN FR	FT IN FR	FT IN FR	NO	ANG
LOCATION END BENT 15											NO. REQUIRED = 1					
6	D01	5- 0	15	23			2- 1	0- 3	2- 1							
5	E02	8- 7	244	1			8- 6 ½									
4	E03	29- 8	20	1			29- 8									
4	E04	31- 3	20	1			31- 3									
8	E05	32- 3	10	1			32- 3									
8	E06	54- 4	4	1			54- 4									
8	E07	6-11	8	1			6-10 ½									
8	E08	7-11	14	18	3	3	5- 3									
6	E11	3- 2	4	17	3		2- 1 ½									
6	E12	62- 7	4	2			1- 7	61- 0							1	
5	E14	12- 9	48	4	4	4	2- 3 ½	3- 7								
5	E15	9- 3	16	5			2- 3 ½	3- 7	0- 6 ½	0- 6 ½						
5	E16	6- 6	8	11			3- 5 ¾	1- 6	1- 6							
4	E17	4- 2	20	17	3		3- 6									
4	E18	2- 7	2	1			2- 7									
5	E19	9- 4	8	1			9- 4									
5	E20	9- 2	2	1			9- 2									
5	E21	5- 6	12	1			5- 6									
5	E30	6-11	48	11			2- 7	2- 2	2- 2							
5	E31	7- 2	40	11			2-10	2- 2	2- 2							
LOCATION FOOTING (PIER 2)											NO. REQUIRED = 1					
11	F01	18- 8	134	17	3		16- 8									
11	F02	34- 0	116	11			27- 4	3- 4	3- 4							
11	F04	29-11	78	18	1	1	26- 9									
8	F06	6- 2	120	18	3	3	3- 6									
8	F07	38- 0	56	11			27- 0	5- 6	5- 6							
7	F08	30-11	24	11			26-11	2- 0	2- 0							
11	F10	25- 8	78	17	3		23- 8									
LOCATION FOOTING (PIERS 3, 5, 12 & 14)											NO. REQUIRED = 4					
11	F01	14- 5	86	17	3		12- 5									
11	F02	39-11	38	11			33- 3	3- 4	3- 4							
11	F03	27-11	62	11			21- 3	3- 4	3- 4							
11	F04	35-11	36	18	1	1	32- 9									
8	F06	6- 2	114	18	3	3	3- 6									
8	F07	42- 0	25	11			33- 0	4- 6	4- 6							
8	F08	30- 0	37	11			21- 0	4- 6	4- 6							
7	F09	36-10	10	11			32-10	2- 0	2- 0							
7	F10	24-10	10	11			20-10	2- 0	2- 0							
6	F11	34- 8	12	18	3	3	32- 8									
6	F12	22- 8	18	18	3	3	20- 8									
LOCATION FOOTING (PIERS 4 & 13)											NO. REQUIRED = 2					
11	F01	19- 9	86	17	3		17- 9									
11	F02	39-11	38	11			33- 3	3- 4	3- 4							
11	F03	27-11	62	11			21- 3	3- 4	3- 4							
11	F04	35-11	36	18	1	1	32- 9									
8	F06	6- 2	114	18	3	3	3- 6									
8	F07	42- 0	25	11			33- 0	4- 6	4- 6							
8	F08	30- 0	37	11			21- 0	4- 6	4- 6							
7	F09	36-10	10	11			32-10	2- 0	2- 0							
7	F10	24-10	10	11			20-10	2- 0	2- 0							
6	F11	34- 8	12	18	3	3	32- 8									
6	F12	22- 8	18	18	3	3	20- 8									

NOTE:
WORK THIS SHEET WITH INDEX 415-011.

BRIDGE NO. 124143

NOTICE: THE OFFICIAL RECORD OF THIS SHEET IS THE ELECTRONIC FILE DIGITALLY SIGNED AND SEALED UNDER RULE 61G15-23.004, F.A.C.

REVISIONS

DATE	BY	DESCRIPTION	DATE	BY	DESCRIPTION

Kisinger Campo & Associates Corp.
201 N. Franklin Street
Suite 400
Tampa, FL 33602
Alfredo Jose Layrisse, PE No. 75610

DRAWN BY: JHJ 10-21
CHECKED BY: BAH 10-21
DESIGNED BY: JHJ 10-21
CHECKED BY: BAH 10-21

LEE COUNTY PUBLIC WORKS
DEPARTMENT OF TRANSPORTATION

ROAD NO.	COUNTY	COUNTY PROJECT No
CR 865	LEE	CN160002

SHEET TITLE: REINFORCING BAR LIST (2 OF 13)

REF. DWG. NO.:

PROJECT NAME: ESTERO BLVD. (CR 865) OVER BIG CARLOS PASS

SHEET NO.: B1-136

MARK		LENGTH	NO	TYP	STY		B	C	D	E	F	H	J	K	N	Ø
SIZE	DES	FT IN	BARS	BAR	A	G	FT IN FR	FT IN FR	FT IN FR	FT IN FR	FT IN FR	FT IN FR	FT IN FR	FT IN FR	NO	ANG
LOCATION FOOTING (PIERS 6, 7, & 8)											NO. REQUIRED = 3					
11	F01	15- 5	86	17	3		13- 5									
11	F02	39-11	38	11			33- 3	3- 4	3- 4							
11	F03	27-11	62	11			21- 3	3- 4	3- 4							
11	F04	35-11	38	18	1	1	32- 9									
8	F06	6- 2	114	18	3	3	3- 6									
8	F07	44- 0	25	11			33- 0	5- 6	5- 6							
8	F08	32- 0	37	11			21- 0	5- 6	5- 6							
7	F09	36-10	12	11			32-10	2- 0	2- 0							
7	F10	24-10	12	11			20-10	2- 0	2- 0							
6	F11	34- 8	12	18	3	3	32- 8									
6	F12	22- 8	18	18	3	3	20- 8									
LOCATION FOOTING (PIER 9)											NO. REQUIRED = 1					
11	F01	15- 5	86	17	3		13- 5									
11	F02	39-11	44	11			33- 3	3- 4	3- 4							
11	F03	27-11	62	11			21- 3	3- 4	3- 4							
11	F04	35-11	44	18	1	1	32- 9									
8	F06	6- 2	114	18	3	3	3- 6									
8	F07	44- 0	25	11			33- 0	5- 6	5- 6							
8	F08	32- 0	37	11			21- 0	5- 6	5- 6							
7	F09	36-10	12	11			32-10	2- 0	2- 0							
7	F10	24-10	12	11			20-10	2- 0	2- 0							
6	F11	34- 8	12	18	3	3	32- 8									
6	F12	22- 8	18	18	3	3	20- 8									
LOCATION FOOTING (PIER 10 & 11)											NO. REQUIRED = 2					
11	F01	14- 5	86	17	3		12- 5									
11	F02	39-11	44	11			33- 3	3- 4	3- 4							
11	F03	27-11	62	11			21- 3	3- 4	3- 4							
11	F04	35-11	42	18	1	1	32- 9									
8	F06	6- 2	114	18	3	3	3- 6									
8	F07	42- 0	25	11			33- 0	4- 6	4- 6							
8	F08	30- 0	37	11			21- 0	4- 6	4- 6							
7	F09	36-10	10	11			32-10	2- 0	2- 0							
7	F10	24-10	10	11			20-10	2- 0	2- 0							
6	F11	34- 8	12	18	3	3	32- 8									
6	F12	22- 8	18	18	3	3	20- 8									
LOCATION PIER 2 PHASE II											NO. REQUIRED = 1					
4	P02	24- 5	56	4	4	4	4-10	6-11 3/4								
4	P03	12- 0	39	18	4	5	11- 3									
4	P04	5- 7	112	18	4	5	4-10									
4	P05	13-11	30	11			4-10	4- 6 1/2	4- 6 1/2							
4	P06	9- 9	90	17	5		9- 4									
11	P07	24- 8	212	1			24- 8									
10	P08	27- 5	16	36				21-11 3/4	3- 7							62
8	P09	VARY	3	11			4- 7	7-11	7-11							
		24-10	0	11			4- 7	12- 4	12- 4							
8	P09	VARY	3	11			4- 7	7-11	7-11							
		24-10	0	11			4- 7	12- 4	12- 4							
8	P10	17- 4	2	1			17- 4									
8	P11	18- 5	2	1			18- 5									
8	P12	19- 8	2	1			19- 8									
8	P13	21- 1	2	1			21- 1									
8	P14	22- 7	2	1			22- 7									
8	P15	24- 4	2	1			24- 4									

NOTE:
WORK THIS SHEET WITH INDEX 415-011.

BRIDGE NO. 124143

NOTICE: THE OFFICIAL RECORD OF THIS SHEET IS THE ELECTRONIC FILE DIGITALLY SIGNED AND SEALED UNDER RULE 61G15-23.004, F.A.C.

REVISIONS

DATE	BY	DESCRIPTION	DATE	BY	DESCRIPTION

Kisinger Campo & Associates Corp.
201 N. Franklin Street
Suite 400
Tampa, FL 33602
Alfredo Jose Layrisse, PE No. 75610

DRAWN BY: JHJ 10-21
CHECKED BY: BAH 10-21
DESIGNED BY: JHJ 10-21
CHECKED BY: BAH 10-21

LEE COUNTY PUBLIC WORKS
DEPARTMENT OF TRANSPORTATION

ROAD NO.	COUNTY	COUNTY PROJECT No
CR 865	LEE	CN160002

SHEET TITLE: REINFORCING BAR LIST (3 OF 13)

REF. DWG. NO.

PROJECT NAME: ESTERO BLVD. (CR 865) OVER BIG CARLOS PASS

SHEET NO. B1-137

MARK		LENGTH	NO	TYP	STY		B	C	D	E	F	H	J	K	N	Ø
SIZE	DES	FT IN	BARS	BAR	A	G	FT IN FR	FT IN FR	FT IN FR	FT IN FR	FT IN FR	FT IN FR	FT IN FR	FT IN FR	NO	ANG
LOCATION PIER 2 PHASE II (CONTINUED)											NO. REQUIRED = 1					
8	P16	26- 3	2	1			26- 3									
8	P17	28- 6	2	1			28- 6									
8	P18	31- 0	2	1			31- 0									
8	P19	34- 0	2	1			34- 0									
8	P20	39-11	2	1			39-10 3/4									
8	P21	43- 2	2	1			43- 1 1/2									
8	P22	46- 3	2	1			46- 2 3/4									
8	P23	49- 2	10	1			49- 1 1/2									
11	P24	47- 1	24	1			47- 0 1/2									
11	P25	52- 5	12	10			47- 2 1/2	5- 2 1/2								
8	P27	10- 9	31	11			4- 8 1/2	3- 0	3- 0							
10	P30	13- 0	8	1			13- 0									
5	P40	VARY	17	4	4	4	5- 6	3- 4 1/2								
		22- 0	0	4	4	4	8- 9	3- 4 1/2								
5	P40	VARY	17	4	4	4	5- 6	3- 4 1/2								
		22- 0	0	4	4	4	8- 9	3- 4 1/2								
5	P41	21- 5	96	11			3- 4 1/2	9- 0	9- 0							
5	P42	42- 1	40	4	4	4	17- 2	3- 4 1/2								
4	P50	6- 8	78	11			2- 6	2- 1	2- 1							
4	P51	6-10	65	11			2- 8	2- 1	2- 1							
4	P52	6- 7	35	11			0- 7	3- 0	3- 0							
4	P53	8- 1	9	4	4	4	3- 0	0- 8								
4	P54	7- 3	12	4	4	4	2- 7	0- 8								
4	P55	1- 8	21	18	1	1	0- 8									
4	P56	7- 8	4	11			1- 8	3- 0	3- 0							
6	P57	VARY	6	4	4	4	5- 6 1/4	1- 6								
		17- 1	0	4	4	4	6- 6 1/4	1- 6								
6	P57	VARY	6	4	4	4	5- 6 1/4	1- 6								
		17- 1	0	4	4	4	6- 6 1/4	1- 6								
4	P58	12- 0	24	4	4	4	0- 9 1/2	4-10								
LOCATION PIER 2 PHASE III											NO. REQUIRED = 1					
8	P27	10- 9	11	11			4- 8 1/2	3- 0	3- 0							
10	P30	13- 0	8	1			13- 0									
8	P31	5- 5	2	1			5- 5									
8	P32	8- 6	2	1			8- 6									
8	P33	11- 5	10	1			10- 5									
11	P34	11-11	24	1			11-11									
11	P35	16- 4	12	10			11- 1	5- 2 1/2								
5	P40	VARY	17	4	4	4	5- 6	3- 4 1/2								
		22- 0	0	4	4	4	8- 9	3- 4 1/2								
5	P40	VARY	17	4	4	4	5- 6	3- 4 1/2								
		22- 0	0	4	4	4	8- 9	3- 4 1/2								
4	P50	6- 8	24	11			2- 6	2- 1	2- 1							
4	P51	6-10	20	11			2- 8	2- 1	2- 1							
4	P52	6- 7	5	11			0- 7	3- 0	3- 0							
4	P53	8- 1	3	4	4	4	3- 0	0- 8								
4	P55	1- 8	3	18	1	1	0- 8									
4	P56	7- 8	4	11			1- 8	3- 0	3- 0							
6	P57	VARY	6	4	4	4	5- 6 1/4	1- 6								
		17- 1	0	4	4	4	6- 6 1/4	1- 6								
6	P57	VARY	6	4	4	4	5- 6 1/4	1- 6								
		17- 1	0	4	4	4	6- 6 1/4	1- 6								
4	P58	12- 0	24	4	4	4	0- 9 1/2	4-10								

NOTE:
WORK THIS SHEET WITH INDEX 415-011.

BRIDGE NO. 124143

NOTICE: THE OFFICIAL RECORD OF THIS SHEET IS THE ELECTRONIC FILE DIGITALLY SIGNED AND SEALED UNDER RULE 61G15-23.004, F.A.C.

REVISIONS

DATE	BY	DESCRIPTION	DATE	BY	DESCRIPTION

Kisinger Campo & Associates Corp.
201 N. Franklin Street
Suite 400
Tampa, FL 33602
Alfredo Jose Layrisse, PE No. 75610

DRAWN BY: JHJ 10-21
CHECKED BY: BAH 10-21
DESIGNED BY: JHJ 10-21
CHECKED BY: BAH 10-21

LEE COUNTY PUBLIC WORKS
DEPARTMENT OF TRANSPORTATION

ROAD NO.	COUNTY	COUNTY PROJECT No
CR 865	LEE	CN160002

SHEET TITLE: REINFORCING BAR LIST (4 OF 13)

REF. DWG. NO.:

PROJECT NAME: ESTERO BLVD. (CR 865) OVER BIG CARLOS PASS

SHEET NO.: B1-138

MARK		LENGTH	NO	TYP	STY		B	C	D	E	F	H	J	K	N	Ø
SIZE	DES	FT IN	BARS	BAR	A	G	FT IN FR	FT IN FR	FT IN FR	FT IN FR	FT IN FR	FT IN FR	FT IN FR	FT IN FR	NO	ANG
LOCATION COLUMN AND CAP (PIER 3)											NO. REQUIRED = 1					
4	P02	24- 3	16	4	4	4	4-10	6-11								
4	P04	5- 7	16	18	4	5	4-10									
4	P05	13-10	16	11			4-10	4- 6	4- 6							
4	P06	9- 9	32	17	5		9- 4									
11	P07	21- 3	86	1			21- 3									
8	P08	24- 9	24	36				21-11 3/4	3- 7							55
8	P09	VARY	3	11			4- 7	7-11	7-11							
		24-10	0	11			4- 7	12- 4	12- 4							
8	P09	VARY	3	11			4- 7	7-11	7-11							
		24-10	0	11			4- 7	12- 4	12- 4							
8	P10	17- 4	2	1			17- 4									
8	P11	18- 5	2	1			18- 5									
8	P12	19- 8	2	1			19- 8									
8	P13	21- 0	2	1			21- 0									
8	P14	22- 7	2	1			22- 7									
8	P15	24- 4	2	1			24- 4									
8	P16	26- 3	2	1			26- 3									
8	P17	28- 5	2	1			28- 5									
8	P18	31- 0	2	1			31- 0									
8	P19	34- 0	2	1			34- 0									
8	P20	39- 7	2	1			39- 7									
8	P21	45- 9	2	1			45- 9									
8	P22	51-11	2	1			51-11									
8	P23	58- 0	10	1			58- 0									
11	P24	58- 0	24	1			58- 0									
11	P25	59- 3	12	10			54- 0	5- 2 1/2								
11	P26	16-10	12	10			11- 7	5- 2 1/2								
8	P27	10- 9	40	11			4- 8 1/2	3- 0	3- 0							
8	P30	12- 3	24	1			12- 2 1/2									
5	P40	VARY	16	4	4	4	5- 6	3- 5								
		22- 1	0	4	4	4	8- 9	3- 5								
5	P40	VARY	16	4	4	4	5- 6	3- 5								
		22- 1	0	4	4	4	8- 9	3- 5								
5	P40	VARY	16	4	4	4	5- 6	3- 5								
		22- 1	0	4	4	4	8- 9	3- 5								
5	P40	VARY	16	4	4	4	5- 6	3- 5								
		22- 1	0	4	4	4	8- 9	3- 5								
5	P41	21- 7	88	11			3- 5	9- 1	9- 1							
5	P42	42- 2	40	4	4	4	17- 2	3- 5								
4	P50	7- 2	96	11			2- 6	2- 4	2- 4							
4	P51	7- 4	80	11			2- 8	2- 4	2- 4							
LOCATION COLUMN (PIER 4)											NO. REQUIRED = 1					
4	P02	24- 3	34	4	4	4	4-10	6-11								
4	P03	12- 0	18	18	4	5	11- 3									
4	P04	5- 7	34	18	4	5	4-10									
4	P05	13-10	16	11			4-10	4- 6	4- 6							
4	P06	9- 9	32	17	5		9- 4									
LOCATION COLUMN (PIER 5)											NO. REQUIRED = 1					
11	P01	20- 5	86	1			20- 5									
4	P02	24- 3	50	4	4	4	4-10	6-11								
4	P03	12- 0	34	18	4	5	11- 3									
4	P04	5- 7	50	18	4	5	4-10									
4	P05	13-10	16	11			4-10	4- 6	4- 6							
4	P06	9- 9	32	17	5		9- 4									

NOTE:
WORK THIS SHEET WITH INDEX 415-011.

BRIDGE NO. 124143

NOTICE: THE OFFICIAL RECORD OF THIS SHEET IS THE ELECTRONIC FILE DIGITALLY SIGNED AND SEALED UNDER RULE 61G15-23.004, F.A.C.

REVISIONS

DATE	BY	DESCRIPTION	DATE	BY	DESCRIPTION

Kisinger Campo & Associates Corp.
201 N. Franklin Street
Suite 400
Tampa, FL 33602
Alfredo Jose Layrisse, PE No. 75610

DRAWN BY:	CHECKED BY:	DESIGNED BY:	CHECKED BY:
JHJ 10-21	BAH 10-21	JHJ 10-21	BAH 10-21

LEE COUNTY PUBLIC WORKS
DEPARTMENT OF TRANSPORTATION

ROAD NO.	COUNTY	COUNTY PROJECT No
CR 865	LEE	CN160002

SHEET TITLE: REINFORCING BAR LIST (5 OF 13)

REF. DWG. NO.:

PROJECT NAME: ESTERO BLVD. (CR 865) OVER BIG CARLOS PASS

SHEET NO.: B1-139

MARK		LENGTH	NO	TYP	STY		B	C	D	E	F	H	J	K	N	Ø
SIZE	DES	FT IN	BARS	BAR	A	G	FT IN FR	FT IN FR	FT IN FR	FT IN FR	FT IN FR	FT IN FR	FT IN FR	FT IN FR	NO	ANG
LOCATION COLUMN (PIER 6)											NO. REQUIRED = 1					
11	P01	28- 5	86	1			28- 5									
4	P02	24- 3	66	4	4	4	4-10	6-11								
4	P03	12- 0	50	18	4	5	11- 3									
4	P04	5- 7	66	18	4	5	4-10									
4	P05	13-10	16	11			4-10	4- 6	4- 6							
4	P06	9- 9	32	17	5		9- 4									
LOCATION COLUMN (PIER 7)											NO. REQUIRED = 1					
11	P01	34-10	86	1			34-10									
4	P02	24- 3	80	4	4	4	4-10	6-11								
4	P03	12- 0	64	18	4	5	11- 3									
4	P04	5- 7	80	18	4	5	4-10									
4	P05	13-10	16	11			4-10	4- 6	4- 6							
4	P06	9- 9	32	17	5		9- 4									
LOCATION COLUMN (PIER 8)											NO. REQUIRED = 1					
11	P01	37- 5	86	1			37- 5									
4	P02	24- 3	84	4	4	4	4-10	6-11								
4	P03	12- 0	68	18	4	5	11- 3									
4	P04	5- 7	84	18	4	5	4-10									
4	P05	13-10	16	11			4-10	4- 6	4- 6							
4	P06	9- 9	32	17	5		9- 4									
LOCATION COLUMN (PIER 9)											NO. REQUIRED = 1					
11	P01	36- 2	86	1			36- 2									
4	P02	24- 3	74	4	4	4	4-10	6-11								
4	P03	12- 0	58	18	4	5	11- 3									
4	P04	5- 7	74	18	4	5	4-10									
4	P05	13-10	16	11			4-10	4- 6	4- 6							
4	P06	9- 9	32	17	5		9- 4									
LOCATION COLUMN (PIER 10)											NO. REQUIRED = 1					
11	P01	31- 1	86	1			31- 1									
4	P02	24- 3	64	4	4	4	4-10	6-11								
4	P03	12- 0	48	18	4	5	11- 3									
4	P04	5- 7	64	18	4	5	4-10									
4	P05	13-10	16	11			4-10	4- 6	4- 6							
4	P06	9- 9	32	17	5		9- 4									
LOCATION COLUMN (PIER 11)											NO. REQUIRED = 1					
11	P01	23- 2	86	1			23- 2									
4	P02	24- 3	48	4	4	4	4-10	6-11								
4	P03	12- 0	32	18	4	5	11- 3									
4	P04	5- 7	48	18	4	5	4-10									
4	P05	13-10	16	11			4-10	4- 6	4- 6							
4	P06	9- 9	32	17	5		9- 4									

NOTE:
WORK THIS SHEET WITH INDEX 415-011.

BRIDGE NO. 124143

NOTICE: THE OFFICIAL RECORD OF THIS SHEET IS THE ELECTRONIC FILE DIGITALLY SIGNED AND SEALED UNDER RULE 61G15-23.004, F.A.C.

REVISIONS

DATE	BY	DESCRIPTION	DATE	BY	DESCRIPTION

Kisinger Campo & Associates Corp.
201 N. Franklin Street
Suite 400
Tampa, FL 33602
Alfredo Jose Layrisse, PE No. 75610

DRAWN BY:	CHECKED BY:	DESIGNED BY:	CHECKED BY:
JHJ 10-21	BAH 10-21	JHJ 10-21	BAH 10-21

LEE COUNTY PUBLIC WORKS
DEPARTMENT OF TRANSPORTATION

ROAD NO.	COUNTY	COUNTY PROJECT No
CR 865	LEE	CN160002

SHEET TITLE: REINFORCING BAR LIST (6 OF 13)

REF. DWG. NO.:

PROJECT NAME: ESTERO BLVD. (CR 865) OVER BIG CARLOS PASS

SHEET NO.: B1-140

MARK		LENGTH	NO	TYP	STY		B	C	D	E	F	H	J	K	N	Ø
SIZE	DES	FT IN	BARS	BAR	A	G	FT IN FR	FT IN FR	FT IN FR	FT IN FR	FT IN FR	FT IN FR	FT IN FR	FT IN FR	NO	ANG
LOCATION COLUMN (PIER 12)											NO. REQUIRED = 1					
11	P01	14- 3	86	1			14- 3									
4	P02	24- 3	38	4	4	4	4-10	6-11								
4	P03	12- 0	22	18	4	5	11- 3									
4	P04	5- 7	38	18	4	5	4-10									
4	P05	13-10	16	11			4-10	4- 6	4- 6							
4	P06	9- 9	32	17	5		9- 4									
LOCATION COLUMN (PIER 13)											NO. REQUIRED = 1					
4	P02	24- 3	28	4	4	4	4-10	6-11								
4	P03	12- 0	12	18	4	5	11- 3									
4	P04	5- 7	28	18	4	5	4-10									
4	P05	13-10	16	11			4-10	4- 6	4- 6							
4	P06	9- 9	32	17	5		9- 4									
LOCATION CAP (PIERS 4 THRU 13)											NO. REQUIRED = 10					
11	P07	24- 0	86	1			24- 0									
8	P08	27- 5	24	36				21-11 3/4	3- 7							62
8	P09	VARY	3	11			4- 7	7-11	7-11							
		24-10	0	11			4- 7	12- 4	12- 4							
8	P09	VARY	3	11			4- 7	7-11	7-11							
		24-10	0	11			4- 7	12- 4	12- 4							
8	P10	17- 4	2	1			17- 4									
8	P11	18- 5	2	1			18- 5									
8	P12	19- 8	2	1			19- 8									
8	P13	21- 0	2	1			21- 0									
8	P14	22- 7	2	1			22- 7									
8	P15	24- 4	2	1			24- 4									
8	P16	26- 3	2	1			26- 3									
8	P17	28- 5	2	1			28- 5									
8	P18	31- 0	2	1			31- 0									
8	P19	34- 0	2	1			34- 0									
8	P20	39- 7	2	1			39- 7									
8	P21	45- 9	2	1			45- 9									
8	P22	51-11	2	1			51-11									
8	P23	58- 0	10	1			58- 0									
11	P24	58- 0	24	1			58- 0									
11	P25	59- 3	12	10			54- 0	5- 2 1/2								
11	P26	16-10	12	10			11- 7	5- 2 1/2								
8	P27	10- 9	40	11			4- 8 1/2	3- 0	3- 0							
8	P30	12- 3	24	1			12- 2 1/2									
5	P40	VARY	16	4	4	4	5- 6	3- 5								
		22- 1	0	4	4	4	8- 9	3- 5								
5	P40	VARY	16	4	4	4	5- 6	3- 5								
		22- 1	0	4	4	4	8- 9	3- 5								
5	P40	VARY	16	4	4	4	5- 6	3- 5								
		22- 1	0	4	4	4	8- 9	3- 5								
5	P40	VARY	16	4	4	4	5- 6	3- 5								
		22- 1	0	4	4	4	8- 9	3- 5								
5	P41	21- 7	88	11			3- 5	9- 1	9- 1							
5	P42	42- 2	40	4	4	4	17- 2	3- 5								
4	P50	7- 2	96	11			2- 6	2- 4	2- 4							
4	P51	7- 4	80	11			2- 8	2- 4	2- 4							

NOTE:
WORK THIS SHEET WITH INDEX 415-011.

BRIDGE NO. 124143

NOTICE: THE OFFICIAL RECORD OF THIS SHEET IS THE ELECTRONIC FILE DIGITALLY SIGNED AND SEALED UNDER RULE 61G15-23.004, F.A.C.

REVISIONS

DATE	BY	DESCRIPTION	DATE	BY	DESCRIPTION

Kisinger Campo & Associates Corp.
201 N. Franklin Street
Suite 400
Tampa, FL 33602
Alfredo Jose Layrisse, PE No. 75610

DRAWN BY: JHJ 10-21
CHECKED BY: BAH 10-21
DESIGNED BY: JHJ 10-21
CHECKED BY: BAH 10-21

LEE COUNTY PUBLIC WORKS
DEPARTMENT OF TRANSPORTATION

ROAD NO.	COUNTY	COUNTY PROJECT No
CR 865	LEE	CN160002

SHEET TITLE: REINFORCING BAR LIST (7 OF 13)

REF. DWG. NO.

PROJECT NAME: ESTERO BLVD. (CR 865) OVER BIG CARLOS PASS

SHEET NO. B1-141

MARK		LENGTH	NO	TYP	STY		B	C	D	E	F	H	J	K	N	Ø
SIZE	DES	FT IN	BARS	BAR	A	G	FT IN FR	FT IN FR	FT IN FR	FT IN FR	FT IN FR	FT IN FR	FT IN FR	FT IN FR	NO	ANG
LOCATION COLUMN AND CAP (PIER 14) NO. REQUIRED = 1																
4	P02	24- 3	10	4	4	4	4-10	6-11								
4	P04	5- 7	10	18	4	5	4-10									
4	P05	13-10	10	11			4-10	4- 6	4- 6							
4	P06	9- 9	20	17	5		9- 4									
11	P07	17- 8	86	1			17- 8									
8	P08	21- 3	24	36				21-11 3/4	3- 7							46
8	P09	VARY	3	11			4- 7	7-11	7-11							
		24-10	0	11			4- 7	12- 4	12- 4							
8	P09	VARY	3	11			4- 7	7-11	7-11							
		24-10	0	11			4- 7	12- 4	12- 4							
8	P10	17- 4	2	1			17- 4									
8	P11	18- 5	2	1			18- 5									
8	P12	19- 8	2	1			19- 8									
8	P13	21- 0	2	1			21- 0									
8	P14	22- 7	2	1			22- 7									
8	P15	24- 4	2	1			24- 4									
8	P16	26- 3	2	1			26- 3									
8	P17	28- 5	2	1			28- 5									
8	P18	31- 0	2	1			31- 0									
8	P19	34- 0	2	1			34- 0									
8	P20	39- 7	2	1			39- 7									
8	P21	45- 9	2	1			45- 9									
8	P22	51-11	2	1			51-11									
8	P23	58- 0	10	1			58- 0									
11	P24	58- 0	24	1			58- 0									
11	P25	59- 3	12	10			54- 0	5- 2 1/2								
11	P26	16-10	12	10			11- 7	5- 2 1/2								
8	P27	10- 9	40	11			4- 8 1/2	3- 0	3- 0							
8	P30	12- 3	24	1			12- 2 1/2									
5	P40	VARY	16	4	4	4	5- 6	3- 5								
		22- 1	0	4	4	4	8- 9	3- 5								
5	P40	VARY	16	4	4	4	5- 6	3- 5								
		22- 1	0	4	4	4	8- 9	3- 5								
5	P40	VARY	16	4	4	4	5- 6	3- 5								
		22- 1	0	4	4	4	8- 9	3- 5								
5	P40	VARY	16	4	4	4	5- 6	3- 5								
		22- 1	0	4	4	4	8- 9	3- 5								
5	P41	21- 7	88	11			3- 5	9- 1	9- 1							
5	P42	42- 2	40	4	4	4	17- 2	3- 5								
4	P50	7- 2	96	11			2- 6	2- 4	2- 4							
4	P51	7- 4	80	11			2- 8	2- 4	2- 4							
LOCATION SUPERSTRUCTURE - UNIT 1 DECK PHASE II NO. REQUIRED = 1																
5	S01	34- 8	338	1			34- 8									
5	S02	36- 4	336	1			36- 4									
5	S03	176- 1	77	2			1- 8	172- 9							2	
4	S51	9- 7	174	1			9- 7									
LOCATION SUPERSTRUCTURE - UNIT 1 DECK PHASE III NO. REQUIRED = 1																
5	S03	176- 1	72	2			1- 8	172- 9							2	
5	S04	28- 4	338	1			28- 4									
5	S05	26- 8	336	1			26- 8									
4	S51	9- 7	174	1			9- 7									

NOTE:
WORK THIS SHEET WITH INDEX 415-011.

BRIDGE NO. 124143

NOTICE: THE OFFICIAL RECORD OF THIS SHEET IS THE ELECTRONIC FILE DIGITALLY SIGNED AND SEALED UNDER RULE 61G15-23.004, F.A.C.

REVISIONS

DATE	BY	DESCRIPTION	DATE	BY	DESCRIPTION

Kisinger Campo & Associates Corp.
201 N. Franklin Street
Suite 400
Tampa, FL 33602
Alfredo Jose Layrisse, PE No. 75610

DRAWN BY: JHJ 10-21
CHECKED BY: BAH 10-21
DESIGNED BY: JHJ 10-21
CHECKED BY: BAH 10-21

LEE COUNTY PUBLIC WORKS
DEPARTMENT OF TRANSPORTATION

ROAD NO.	COUNTY	COUNTY PROJECT No
CR 865	LEE	CN160002

SHEET TITLE: REINFORCING BAR LIST (8 OF 13)
REF. DWG. NO.
PROJECT NAME: ESTERO BLVD. (CR 865) OVER BIG CARLOS PASS
SHEET NO. B1-142

MARK		LENGTH	NO	TYP	STY		B	C	D	E	F	H	J	K	N	Ø
SIZE	DES	FT IN	BARS	BAR	A	G	FT IN FR	FT IN FR	FT IN FR	FT IN FR	FT IN FR	FT IN FR	FT IN FR	FT IN FR	NO	ANG
LOCATION UNIT 1 PHASE II THICKENED SLAB (BEGIN AND END) NO. REQUIRED = 1																
4	T01	5- 9	24	25			0- 7 1/2	2- 3	0- 7 1/2	0- 7 1/2	1- 0	1- 0				
5	T03	10- 7	56	42			0- 4	3- 9	2- 1	3- 9		10- 3				
5	T05	5- 9	14	1			5- 9									
5	T06	31- 6	6	1			31- 6									
LOCATION UNIT 1 PHASE III THICKENED SLAB (BEGIN AND END) NO. REQUIRED = 1																
4	T01	5- 9	24	25			0- 7 1/2	2- 3	0- 7 1/2	0- 7 1/2	1- 0	1- 0				
5	T02	31- 6	6	1			31- 6									
5	T03	11- 0	56	42			0- 4	3- 9	2- 6	3- 9		10- 8				
5	T04	5- 9	14	1			5- 9									
LOCATION DIAPHRAGMS - SPAN 1 NO. REQUIRED = 5																
5	G01	6- 1	38	1			6- 1									
5	G02	5- 8	38	1			5- 8									
5	G03	9- 8	41	4	4	4	0- 8	3- 8								
5	G04	2- 0	152	33	6		2- 0	0- 2								
5	G05	2- 1	4	33	6		2- 0 1/2	0- 2								
5	G06	2- 4	4	33	6		2- 3 1/4	0- 2								
5	G07	4- 0	16	1			4- 0									
LOCATION SUPERSTRUCTURE - UNIT 2 DECK PHASE II NO. REQUIRED = 1																
5	S06	46- 1	318	1			46- 1									
5	S07	47- 9	318	1			47- 9									
5	S03	165- 8	103	2			1- 8	162- 4							2	
4	S50	9- 7	164	1			9- 7									
LOCATION SUPERSTRUCTURE - UNIT 2 DECK PHASE III NO. REQUIRED = 1																
5	S08	16-11	318	1			16-11									
5	S09	15- 3	318	1			15- 3									
5	S03	164- 0	47	2			1- 8	160- 8							2	
4	S50	9- 7	164	1			9- 7									
LOCATION UNIT 2 PHASE II THICKENED SLAB (BEGIN AN NO. REQUIRED = 1																
4	T01	5- 9	40	25			0- 7 1/2	2- 3	0- 7 1/2	0- 7 1/2	1- 0	1- 0				
5	T03	11- 0	50	42			0- 4	3- 9	2- 6	3- 9		10- 8				
5	T05	5- 9	14	1			5- 9									
5	T06	44- 2	6	1			44- 2									
LOCATION UNIT 2 PHASE III THICKENED SLAB (BEGIN A NO. REQUIRED = 1																
4	T01	5- 9	16	25			0- 7 1/2	2- 3	0- 7 1/2	0- 7 1/2	1- 0	1- 0				
5	T02	18-10	6	1			18-10									
5	T03	11- 0	28	42			0- 4	3- 9	2- 6	3- 9		10- 8				
5	T04	5- 9	14	1			5- 9									

NOTE:
WORK THIS SHEET WITH INDEX 415-011.

BRIDGE NO. 124143

NOTICE: THE OFFICIAL RECORD OF THIS SHEET IS THE ELECTRONIC FILE DIGITALLY SIGNED AND SEALED UNDER RULE 61G15-23.004, F.A.C.

REVISIONS

DATE	BY	DESCRIPTION	DATE	BY	DESCRIPTION

Kisinger Campo & Associates Corp.
201 N. Franklin Street
Suite 400
Tampa, FL 33602
Alfredo Jose Layrisse, PE No. 75610

DRAWN BY: JHJ 10-21
CHECKED BY: BAH 10-21
DESIGNED BY: JHJ 10-21
CHECKED BY: BAH 10-21

LEE COUNTY PUBLIC WORKS
DEPARTMENT OF TRANSPORTATION

ROAD NO.	COUNTY	COUNTY PROJECT No
CR 865	LEE	CN160002

SHEET TITLE: REINFORCING BAR LIST (9 OF 13)

REF. DWG. NO.

PROJECT NAME: ESTERO BLVD. (CR 865) OVER BIG CARLOS PASS

SHEET NO. B1-143

MARK		LENGTH	NO	TYP	STY		B	C	D	E	F	H	J	K	N	Ø
SIZE	DES	FT IN	BARS	BAR	A	G	FT IN FR	FT IN FR	FT IN FR	FT IN FR	FT IN FR	FT IN FR	FT IN FR	FT IN FR	NO	ANG
LOCATION SUPERSTRUCTURE - UNIT 3 DECK NO. REQUIRED = 1																
5	S03	332- 0	126	2			1- 8	323- 8							5	
5	S10	23- 9	325	1			23- 9									
5	S11	39- 3	325	1			39- 3									
5	S12	43- 0	315	1			43- 0									
5	S13	20- 0	315	1			20- 0									
5	S14	15- 6	325	1			15- 6									
5	S15	11- 6	325	1			11- 6									
5	S50	10- 6	648	1			10- 6									
5	S16	35- 0	62	1			35- 0									
LOCATION SUPERSTRUCTURE - UNIT 3 DECK DRAIN NO. REQUIRED = 3																
5	S39	4- 0	8	1			4- 0									
5	S40	11- 6	2	1			11- 6									
5	S41	11-10	6	42			0- 4	3-11	3- 0	3-11		11- 6				
5	S42	7- 6	6	42			0- 7	1-10	2- 2	1-10		7- 0				
LOCATION UNIT 3 THICKENED SLAB (BEGIN AND END) NO. REQUIRED = 1																
4	T01	5- 9	56	25			0- 7 ½	2- 3	0- 7 ½	0- 7 ½	1- 0	1- 0				
5	T02	62-10	6	2			1- 8	61- 2							1	
5	T03	11- 0	98	42			0- 4	3- 9	2- 6	3- 9		10- 8				
5	T04	5- 9	14	1			5- 9									
5	T05	5- 9	14	1			5- 9									
LOCATION SUPERSTRUCTURE - UNIT 4 DECK NO. REQUIRED = 1																
5	S03	163-10	126	2			1- 8	160- 6							2	
5	S10	23- 9	162	1			23- 9									
5	S11	39- 3	162	1			39- 3									
5	S12	43- 0	152	1			43- 0									
5	S13	20- 0	152	1			20- 0									
5	S14	15- 6	162	1			15- 6									
5	S15	11- 6	162	1			11- 6									
5	S50	10- 6	322	1			10- 6									
LOCATION SUPERSTRUCTURE - UNIT 4 OVERLOOK NO. REQUIRED = 2																
6	S17	21- 4	30	1			21- 4									
4	S21	19- 0	2	13			7- 0	6- 0	6- 0						45	45
4	S22	8- 0	4	1			8- 0									
LOCATION SUPERSTRUCTURE - UNIT 4 OVERLOOK VARY BA NO. REQUIRED = 4																
6	S18	VARY	12	1			21- 0									
		18- 3	0	1			15- 6									
6	S19	VARY	12	1			21- 0									
		18- 3	0	1			15- 6									
4	S20	VARY	7	1			8- 9									
		13- 3	0	1			17- 9									
LOCATION SUPERSTRUCTURE - UNIT 4 DECK DRAIN NO. REQUIRED = 2																
5	S39	4- 0	8	1			4- 0									
5	S40	11- 6	2	1			11- 6									
5	S41	11-10	6	42			0- 4	3-11	3- 0	3-11		11- 6				
5	S42	7- 6	6	42			0- 7	1-10	2- 2	1-10		7- 0				

NOTE:
WORK THIS SHEET WITH INDEX 415-011.

BRIDGE NO. 124143

NOTICE: THE OFFICIAL RECORD OF THIS SHEET IS THE ELECTRONIC FILE DIGITALLY SIGNED AND SEALED UNDER RULE 61G15-23.004, F.A.C.

REVISIONS

DATE	BY	DESCRIPTION	DATE	BY	DESCRIPTION

Kisinger Campo & Associates Corp.
201 N. Franklin Street
Suite 400
Tampa, FL 33602
Alfredo Jose Layrisse, PE No. 75610

DRAWN BY: JHJ 10-21
CHECKED BY: BAH 10-21
DESIGNED BY: JHJ 10-21
CHECKED BY: BAH 10-21

LEE COUNTY PUBLIC WORKS
DEPARTMENT OF TRANSPORTATION

ROAD NO.	COUNTY	COUNTY PROJECT No
CR 865	LEE	CN160002

SHEET TITLE: REINFORCING BAR LIST (10 OF 13)

REF. DWG. NO.

PROJECT NAME: ESTERO BLVD. (CR 865) OVER BIG CARLOS PASS

SHEET NO. B1-144

MARK SIZE	MARK DES	LENGTH FT	LENGTH IN	NO BARS	TYP BAR	STY A	STY G	B FT	B IN	B FR	C FT	C IN	C FR	D FT	D IN	D FR	E FT	E IN	E FR	F FT	F IN	F FR	H FT	H IN	H FR	J FT	J IN	J FR	K FT	K IN	K FR	N NO	Ø ANG
LOCATION UNIT 4 THICKENED SLAB (BEGIN AND END) NO. REQUIRED = 1																																	
4	T01	5	9	56	25			0	7 ½		2	3		0	7 ½		0	7 ½		1	0		1	0									
5	T02	62	10	6	2			1	8		61	2																			1	
5	T03	11	0	98	42			0	4		3	9		2	6		3	9					10	8								
5	T04	5	9	14	1			5	9																							
5	T05	5	9	14	1			5	9																							
LOCATION SUPERSTRUCTURE - UNIT 5 DECK NO. REQUIRED = 1																																	
5	S03	495	10	126	2			1	8		482	6																			8	
5	S10	23	9	484	1			23	9																							
5	S11	39	3	484	1			39	3																							
5	S12	43	0	474	1			43	0																							
5	S13	20	0	474	1			20	0																							
5	S14	15	6	484	1			15	6																							
5	S15	11	6	484	1			11	6																							
5	S50	10	6	966	1			10	6																							
5	S16	35	0	124	1			35	0																							
LOCATION SUPERSTRUCTURE- UNIT 5 DECK DRAIN NO. REQUIRED = 2																																	
5	S39	4	0	8	1			4	0																							
5	S40	11	6	2	1			11	6																							
5	S41	11	10	6	42			0	4		3	11		3	0		3	11					11	6								
5	S42	7	6	6	42			0	7		1	10		2	2		1	10					7	0								
LOCATION UNIT 5 THICKENED SLAB (BEGIN AND END) NO. REQUIRED = 1																																	
4	T01	5	9	56	25			0	7 ½		2	3		0	7 ½		0	7 ½		1	0		1	0								
5	T02	62	10	6	2			1	8		61	2																			1	
5	T03	11	0	98	42			0	4		3	9		2	6		3	9					10	8								
5	T04	5	9	14	1			5	9																							
5	T05	5	9	14	1			5	9																							
LOCATION SUPERSTRUCTURE - UNIT 6 DECK NO. REQUIRED = 1																																	
5	S03	164	4	126	2			1	8		161	0																			2	
5	S10	23	9	162	1			23	9																							
5	S11	39	3	162	1			39	3																							
5	S12	43	0	152	1			43	0																							
5	S13	20	0	152	1			20	0																							
5	S14	15	6	162	1			15	6																							
5	S15	11	6	162	1			11	6																							
5	S50	10	6	322	1			10	6																							
LOCATION SUPERSTRUCTURE - UNIT 6 OVERLOOK NO. REQUIRED = 2																																	
6	S17	21	4	30	1			21	4																							
4	S21	19	0	2	13			7	0		6	0		6	0																45	45
4	S22	8	0	4	1			8	0																							
LOCATION SUPERSTRUCTURE - UNIT 6 OVERLOOK VARY BA NO. REQUIRED = 4																																	
6	S18	VARY		12	1			21	0																							
		18	3	0	1			15	6																							
6	S19	VARY		12	1			21	0																							
		18	3	0	1			15	6																							
4	S20	VARY		7	1			8	9																							
		13	3	0	1			17	9																							

NOTE:
WORK THIS SHEET WITH INDEX 415-011.

BRIDGE NO. 124143

NOTICE: THE OFFICIAL RECORD OF THIS SHEET IS THE ELECTRONIC FILE DIGITALLY SIGNED AND SEALED UNDER RULE 61G15-23.004, F.A.C.

REVISIONS

DATE	BY	DESCRIPTION	DATE	BY	DESCRIPTION

Kisinger Campo & Associates Corp.
201 N. Franklin Street
Suite 400
Tampa, FL 33602
Alfredo Jose Layrisse, PE No. 75610

DRAWN BY: JHJ 10-21
CHECKED BY: BAH 10-21
DESIGNED BY: JHJ 10-21
CHECKED BY: BAH 10-21

LEE COUNTY PUBLIC WORKS
DEPARTMENT OF TRANSPORTATION

ROAD NO.	COUNTY	COUNTY PROJECT No
CR 865	LEE	CN160002

SHEET TITLE: REINFORCING BAR LIST (11 OF 13)

REF. DWG. NO.

PROJECT NAME: ESTERO BLVD. (CR 865) OVER BIG CARLOS PASS

SHEET NO. B1-145

MARK		LENGTH	NO	TYP	STY		B	C	D	E	F	H	J	K	N	Ø
SIZE	DES	FT IN	BARS	BAR	A	G	FT IN FR	FT IN FR	FT IN FR	FT IN FR	FT IN FR	FT IN FR	FT IN FR	FT IN FR	NO	ANG
LOCATION UNIT 6 THICKENED SLAB (BEGIN AND END) NO. REQUIRED = 1																
4	T01	5- 9	56	25			0- 7 ½	2- 3	0- 7 ½	0- 7 ½	1- 0	1- 0				
5	T02	62-10	6	2			1- 8	61- 2							1	
5	T03	11- 0	98	42			0- 4	3- 9	2- 6	3- 9		10- 8				
5	T04	5- 9	14	1			5- 9									
5	T05	5- 9	14	1			5- 9									
LOCATION SUPERSTRUCTURE - UNIT 7 DECK NO. REQUIRED = 1																
5	S03	165- 8	126	2			1- 8	162- 4							2	
5	S10	23- 9	164	1			23- 9									
5	S11	39- 3	164	1			39- 3									
5	S12	43- 0	154	1			43- 0									
5	S13	20- 0	154	1			20- 0									
5	S14	15- 6	164	1			15- 6									
5	S15	11- 6	164	1			11- 6									
5	S50	10- 6	326	1			10- 6									
LOCATION UNIT 7 THICKENED SLAB (BEGIN AND END) NO. REQUIRED = 1																
4	T01	5- 9	56	25			0- 7 ½	2- 3	0- 7 ½	0- 7 ½	1- 0	1- 0				
5	T02	62-10	6	2			1- 8	61- 2							1	
5	T03	11- 0	98	42			0- 4	3- 9	2- 6	3- 9		10- 8				
5	T04	5- 9	14	1			5- 9									
5	T05	5- 9	14	1			5- 9									
LOCATION SUPERSTRUCTURE - UNIT 8 DECK NO. REQUIRED = 1																
5	S03	331- 0	126	2			1- 8	322- 8							5	
5	S10	23- 9	323	1			23- 9									
5	S11	39- 9	323	1			39- 9									
5	S12	43- 0	313	1			43- 0									
5	S13	20- 0	313	1			20- 0									
5	S14	15- 6	323	1			15- 6									
5	S15	11- 6	323	1			11- 6									
5	S50	10- 6	644	1			10- 6									
5	S16	35- 0	62	1			35- 0									
LOCATION UNIT 8 THICKENED SLAB (BEGIN AND END) NO. REQUIRED = 1																
4	T01	5- 9	56	25			0- 7 ½	2- 3	0- 7 ½	0- 7 ½	1- 0	1- 0				
5	T02	62-10	6	2			1- 8	61- 2							1	
5	T03	11- 0	98	42			0- 4	3- 9	2- 6	3- 9		10- 8				
5	T04	5- 9	14	1			5- 9									
5	T05	5- 9	14	1			5- 9									
LOCATION SUPERSTRUCTURE - UNIT 9 DECK NO. REQUIRED = 1																
5	S03	333- 0	126	2			1- 8	324- 8							5	
5	S10	23- 9	326	1			23- 9									
5	S11	39- 9	326	1			39- 9									
5	S12	43- 0	316	1			43- 0									
5	S13	20- 0	316	1			20- 0									
5	S14	15- 6	326	1			15- 6									
5	S15	11- 6	326	1			11- 6									
5	S50	10- 6	650	1			10- 6									
5	S16	35- 0	62	1			35- 0									

NOTE:
WORK THIS SHEET WITH INDEX 415-011.

BRIDGE NO. 124143

NOTICE: THE OFFICIAL RECORD OF THIS SHEET IS THE ELECTRONIC FILE DIGITALLY SIGNED AND SEALED UNDER RULE 61G15-23.004, F.A.C.

REVISIONS

DATE	BY	DESCRIPTION	DATE	BY	DESCRIPTION

Kisinger Campo & Associates Corp.
201 N. Franklin Street
Suite 400
Tampa, FL 33602
Alfredo Jose Layrisse, PE No. 75610

DRAWN BY: JHJ 10-21
CHECKED BY: BAH 10-21
DESIGNED BY: JHJ 10-21
CHECKED BY: BAH 10-21

LEE COUNTY PUBLIC WORKS
DEPARTMENT OF TRANSPORTATION

ROAD NO.	COUNTY	COUNTY PROJECT No
CR 865	LEE	CN160002

SHEET TITLE: REINFORCING BAR LIST (12 OF 13)

REF. DWG. NO.

PROJECT NAME: ESTERO BLVD. (CR 865) OVER BIG CARLOS PASS

SHEET NO. B1-146

MARK		LENGTH	NO	TYP	STY		B	C	D	E	F	H	J	K	N	Ø
SIZE	DES	FT IN	BARS	BAR	A	G	FT IN FR	FT IN FR	FT IN FR	FT IN FR	FT IN FR	FT IN FR	FT IN FR	FT IN FR	NO	ANG
LOCATION UNIT 9 THICKENED SLAB (BEGIN AND END)											NO. REQUIRED = 1					
4	T01	5- 9	56	25			0- 7 1/2	2- 3	0- 7 1/2	0- 7 1/2	1- 0	1- 0				
5	T02	62-10	6	2			1- 8	61- 2							1	
5	T03	11- 0	98	42			0- 4	3- 9	2- 6	3- 9		10- 8				
5	T04	5- 9	14	1			5- 9									
5	T05	5- 9	14	1			5- 9									
LOCATION DIAPHRAGMS - SPAN 14											NO. REQUIRED = 4					
5	G01	6-10	66	1			6-10									
5	G03	9- 8	45	4	4	4	0- 8	3- 8								
5	G04	2- 0	132	33	6		2- 0	0- 2								
5	G05	2- 5	4	33	6		2- 5	0- 2								
5	G06	2-11	4	33	6		2-10 1/4	0- 2								
5	G07	4- 0	16	1			4- 0									
LOCATION APPROACH SLAB 1 - PHASE II											NO. REQUIRED = 1					
5	A01	29- 8	33	1			29- 7 1/2									
8	A02	29- 8	43	1			29- 7 1/2									
5	B01	34- 2	72	1			34- 2									
LOCATION APPROACH SLAB 1 - PHASE III											NO. REQUIRED = 1					
5	A03	29- 8	31	1			29- 8									
8	A04	29- 8	40	1			29- 8									
5	B02	29- 4	72	1			29- 4									
LOCATION APPROACH SLAB 2											NO. REQUIRED = 1					
5	A01	29- 8	63	1			29- 7 1/2									
8	A02	29- 8	83	1			29- 7 1/2									
5	B03	63- 6	72	2			2- 2	61- 4							1	

NOTE:
WORK THIS SHEET WITH INDEX 415-011.

BRIDGE NO. 124143

NOTICE: THE OFFICIAL RECORD OF THIS SHEET IS THE ELECTRONIC FILE DIGITALLY SIGNED AND SEALED UNDER RULE 61G15-23.004, F.A.C.

REVISIONS

DATE	BY	DESCRIPTION	DATE	BY	DESCRIPTION

Kisinger Campo & Associates Corp.
201 N. Franklin Street
Suite 400
Tampa, FL 33602
Alfredo Jose Layrisse, PE No. 75610

DRAWN BY: JHJ 10-21	
CHECKED BY: BAH 10-21	
DESIGNED BY: JHJ 10-21	
CHECKED BY: BAH 10-21	

LEE COUNTY PUBLIC WORKS
DEPARTMENT OF TRANSPORTATION

ROAD NO.	COUNTY	COUNTY PROJECT No
CR 865	LEE	CN160002

SHEET TITLE: REINFORCING BAR LIST (13 OF 13)

REF. DWG. NO.:

PROJECT NAME: ESTERO BLVD. (CR 865) OVER BIG CARLOS PASS

SHEET NO.: B1-147

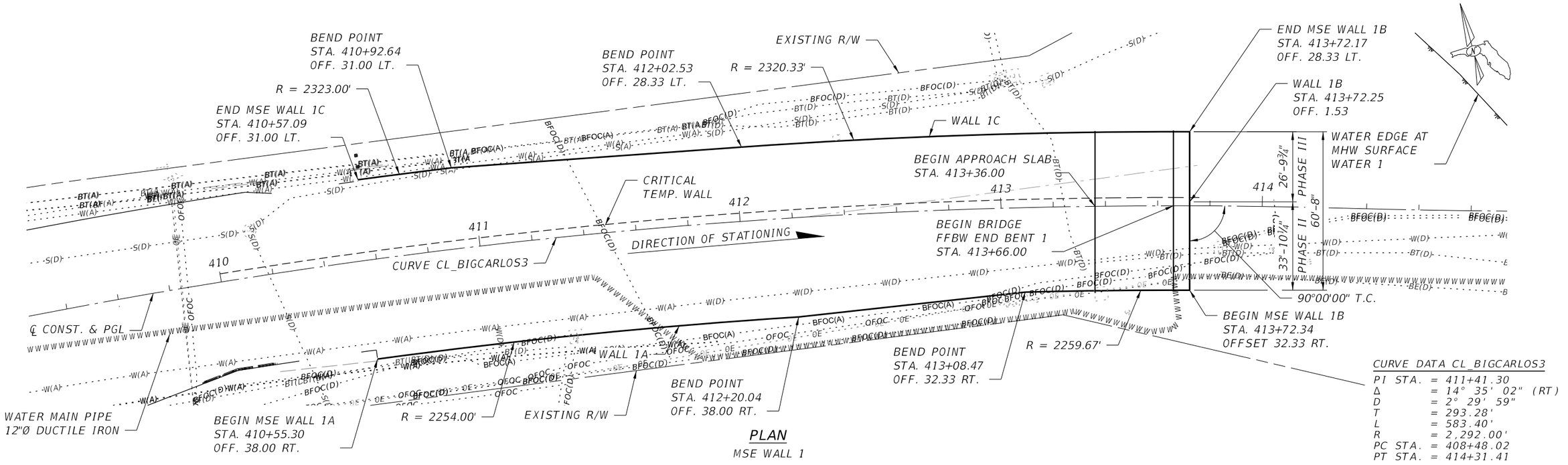

CURVE DATA CL_BIGCARLOS3

PI STA.	= 411+41.30	
Δ	= 14° 35' 02"	(RT)
D	= 2° 29' 59"	
T	= 293.28'	
L	= 583.40'	
R	= 2,292.00'	
PC STA.	= 408+48.02	
PT STA.	= 414+31.41	

PLAN
MSE WALL 1

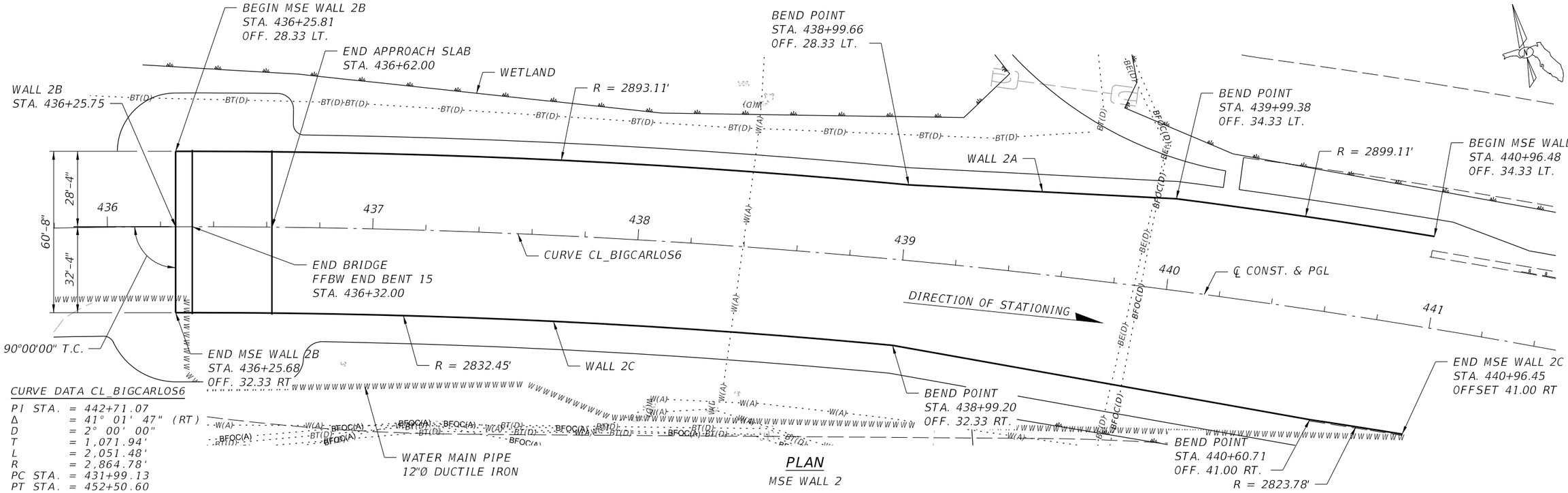

CURVE DATA CL_BIGCARLOS6

PI STA.	= 442+71.07	
Δ	= 41° 01' 47"	(RT)
D	= 2° 00' 00"	
T	= 1,071.94'	
L	= 2,051.48'	
R	= 2,864.78'	
PC STA.	= 431+99.13	
PT STA.	= 452+50.60	

PLAN
MSE WALL 2

NOTICE: THE OFFICIAL RECORD OF THIS SHEET IS THE ELECTRONIC FILE DIGITALLY SIGNED AND SEALED UNDER RULE 61G15-23.004, F.A.C.

REVISIONS

DATE	BY	DESCRIPTION	DATE	BY	DESCRIPTION

Kisinger Campo & Associates Corp.
201 N. Franklin Street
Suite 400
Tampa, FL 33602
Alfredo Jose Layrisse, PE No. 75610

DRAWN BY: ARF 06-19	
CHECKED BY: AJL 06-19	
DESIGNED BY: DAA 06-19	
CHECKED BY: JHD 06-19	

LEE COUNTY PUBLIC WORKS
DEPARTMENT OF TRANSPORTATION

ROAD NO.	COUNTY	COUNTY PROJECT No
CR 865	LEE	CN160002

SHEET TITLE: PLAN - MSE WALL 1 & 2

REF. DWG. NO.:

PROJECT NAME: ESTERO BLVD. (CR 865) OVER BIG CARLOS PASS

SHEET NO.: BW-1

jhanna 2/24/2022 3:23:40 PM c:\pwworkingdir\kca-pw.bentley.com_kca-pw-01\josh hanna\dms00783\B1WallControl01.dgn

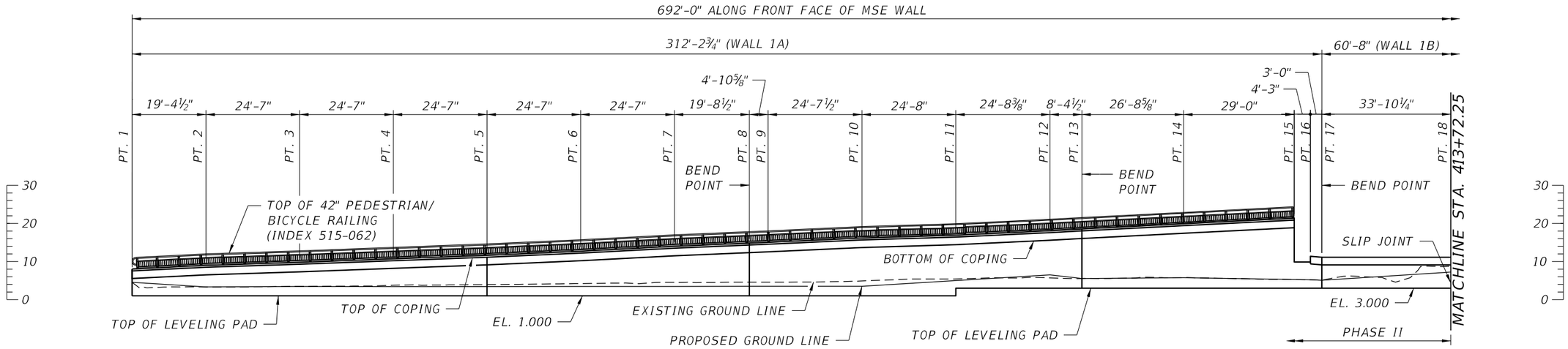

ELEVATION

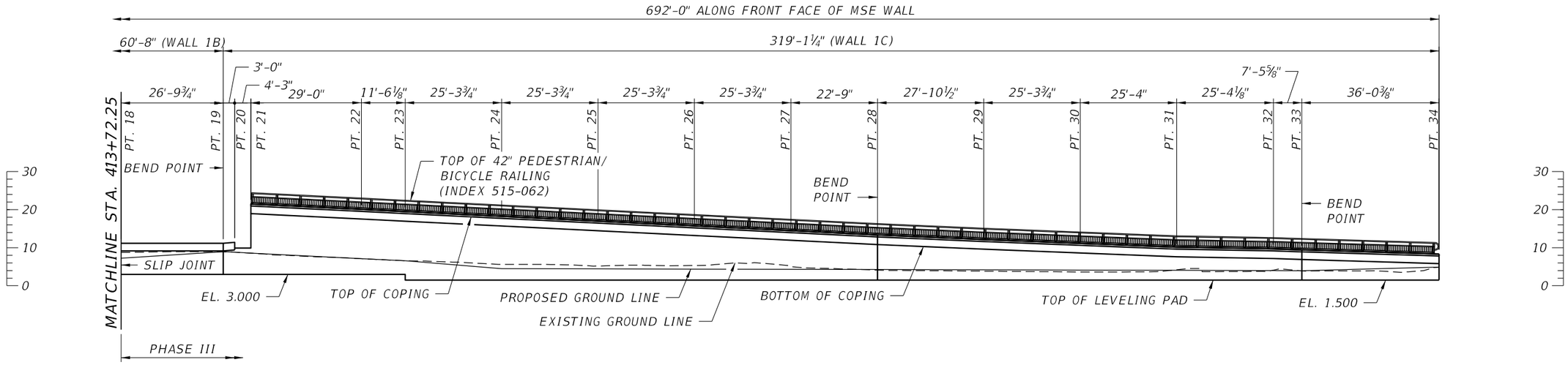

ELEVATION

REVISIONS					
DATE	BY	DESCRIPTION	DATE	BY	DESCRIPTION

Kisinger Campo & Associates Corp.
201 N. Franklin Street
Suite 400
Tampa, FL 33602
Alfredo Jose Layrisse, PE No. 75610

DRAWN BY: ARF 06-19
CHECKED BY: AJL 06-19
DESIGNED BY: DAA 06-19
CHECKED BY: JHD 06-19

LEE COUNTY PUBLIC WORKS
DEPARTMENT OF TRANSPORTATION

ROAD NO.	COUNTY	COUNTY PROJECT No
CR 865	LEE	CN160002

SHEET TITLE: ELEVATION - MSE WALL 1 (1 OF 2)

REF. DWG. NO.

PROJECT NAME: ESTERO BLVD. (CR 865) OVER BIG CARLOS PASS

SHEET NO. BW - 2

NOTICE: THE OFFICIAL RECORD OF THIS SHEET IS THE ELECTRONIC FILE DIGITALLY SIGNED AND SEALED UNDER RULE 61G15-23.004, F.A.C.

MSE WALL 1 ELEVATIONS

POINT	STATION	OFFSET	COPING ELEVATION	PROPOSED GROUND ELEVATION	EXISTING GROUND ELEVATION
		(FT.)	(FT.)	(FT.)	(FT.)
1	410+55.30	38.00	7.929	4.532	4.532
2	410+75.00	38.00	8.489	3.332	3.332
3	411+00.00	38.00	9.297	3.400	3.458
4	411+25.00	38.00	10.114	3.417	3.791
5	411+50.00	38.00	11.116	3.433	3.944
6	411+75.00	38.00	12.305	3.450	4.202
7	412+00.00	38.00	13.502	3.467	4.522
8	412+20.04	38.00	13.960	3.480	4.602
9	412+25.00	37.77	14.178	3.483	4.590
10	412+50.00	36.46	15.290	3.500	4.887
11	412+75.00	34.88	16.435	5.000	5.410
12	413+00.00	33.02	17.607	6.500	5.701
13	413+08.47	32.33	18.045	5.559	5.559
14	413+35.57	32.33	19.400	5.770	5.770
15	413+64.99	32.33	20.870	5.301	5.301
	413+64.99	32.33	9.888	5.301	5.301
16	413+69.30	32.33	9.888	5.193	5.193
	413+69.30	32.33	11.388	5.193	5.193
17	413+72.34	32.33	11.138	5.092	5.092
18	413+72.25	-1.53	11.138	7.233	8.761
19	413+72.17	-28.33	11.138	8.927	8.927
20	413+69.21	-28.33	11.388	8.808	8.808
	413+69.21	-28.33	9.888	8.808	8.808
21	413+65.01	-28.33	9.888	8.564	8.564
	413+65.01	-28.33	20.952	8.564	8.564
22	413+36.37	-28.33	19.519	7.089	7.089
23	413+25.00	-28.33	18.951	6.561	6.561
24	413+00.00	-28.33	17.701	4.500	5.594
25	412+75.00	-28.33	16.451	4.438	5.187
26	412+50.00	-28.33	15.201	4.375	5.317
27	412+25.00	-28.33	13.951	4.313	5.115
28	412+02.53	-28.33	12.828	4.256	4.094
29	411+75.00	-28.50	11.612	4.188	3.835
30	411+50.00	-28.94	10.615	4.125	3.613
31	411+25.00	-29.66	9.608	4.063	4.206
32	411+00.00	-30.65	9.150	4.000	4.092
33	410+92.64	-31.00	8.909	3.929	3.929
34	410+57.09	-31.00	7.831	4.879	4.879

NOTICE: THE OFFICIAL RECORD OF THIS SHEET IS THE ELECTRONIC FILE DIGITALLY SIGNED AND SEALED UNDER RULE 61G15-23.004, F.A.C.

REVISIONS

DATE	BY	DESCRIPTION	DATE	BY	DESCRIPTION

Kisinger Campo & Associates Corp.
201 N. Franklin Street
Suite 400
Tampa, FL 33602
Alfredo Jose Layrisse, PE No. 75610

DRAWN BY: SKB 02-21
CHECKED BY: KL 02-21
DESIGNED BY: SKB 02-21
CHECKED BY: KL 02-21

LEE COUNTY PUBLIC WORKS
DEPARTMENT OF TRANSPORTATION

ROAD NO.	COUNTY	COUNTY PROJECT No
CR 865	LEE	CN160002

SHEET TITLE: ELEVATION - MSE WALL 1 (2 OF 2)

REF. DWG. NO.

PROJECT NAME: ESTERO BLVD. (CR 865) OVER BIG CARLOS PASS

SHEET NO. BW-3

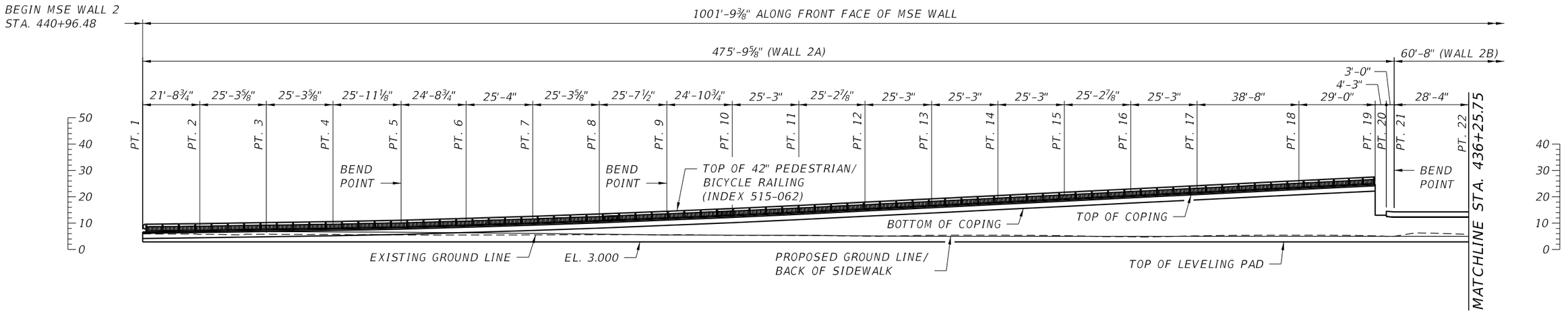

ELEVATION

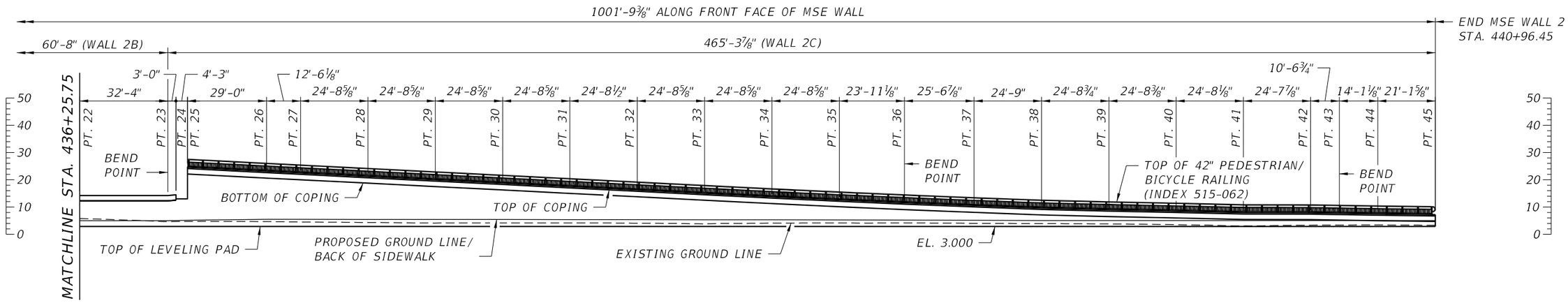

ELEVATION

NOTICE: THE OFFICIAL RECORD OF THIS SHEET IS THE ELECTRONIC FILE DIGITALLY SIGNED AND SEALED UNDER RULE 61G15-23.004, F.A.C.

REVISIONS					
DATE	BY	DESCRIPTION	DATE	BY	DESCRIPTION

Kisinger Campo & Associates Corp.
201 N. Franklin Street
Suite 400
Tampa, FL 33602
Alfredo Jose Layrisse, PE No. 75610

DRAWN BY:	CHECKED BY:	DESIGNED BY:	CHECKED BY:
SKB 02-21	KL 02-21	SKB 02-21	KL 02-21

LEE COUNTY PUBLIC WORKS
DEPARTMENT OF TRANSPORTATION

ROAD NO.	COUNTY	COUNTY PROJECT No
CR 865	LEE	CN160002

SHEET TITLE: ELEVATION - MSE WALL 2 (1 OF 2)

REF. DWG. NO.

PROJECT NAME: ESTERO BLVD. (CR 865) OVER BIG CARLOS PASS

SHEET NO. BW - 4

jhanna 2/24/2022 3:23:50 PM c:\pwworkingdir\kca-pw.bentley.com_kca-pw-01\josh hanna\dms00783\B1MSEwall04.dgn

MSE WALL 2 ELEVATIONS

POINT	STATION	OFFSET (FT.)	COPING ELEVATION (FT.)	PROPOSED GROUND ELEVATION (FT.)	EXISTING GROUND ELEVATION (FT.)
1	440+96.48	-34.33	6.297	6.610	6.056
2	440+75.00	-34.33	6.566	6.740	5.837
3	440+50.00	-34.33	6.967	6.890	5.896
4	440+25.00	-34.33	7.345	6.789	5.833
5	439+99.38	-34.33	7.833	6.681	5.652
6	439+75.00	-32.54	8.538	6.464	5.602
7	439+50.00	-30.92	9.350	6.240	5.659
8	439+25.00	-29.52	10.253	5.941	5.763
9	438+99.66	-28.33	11.260	5.640	5.656
10	438+75.00	-28.33	12.311	5.560	5.514
11	438+50.00	-28.33	13.470	5.479	5.458
12	438+25.00	-28.33	14.710	5.303	5.192
13	438+00.00	-28.33	15.960	5.126	5.497
14	437+75.00	-28.33	17.210	5.126	5.548
15	437+50.00	-28.33	18.460	5.126	5.349
16	437+25.00	-28.33	19.710	5.126	4.941
17	437+00.00	-28.33	20.960	5.126	5.298
18	436+61.71	-28.33	22.875	5.126	5.585
19	436+32.99	-28.33	24.311	5.126	5.302
	436+32.99	-28.33	13.128	5.126	5.302
20	436+28.78	-28.33	13.128	5.126	5.119
	436+28.78	-28.33	14.628	5.126	5.119
21	436+25.81	-28.33	14.378	5.126	5.124
22	436+25.75	0.00	14.378	5.126	5.906

MSE WALL 2 ELEVATIONS

POINT	STATION	OFFSET (FT.)	COPING ELEVATION (FT.)	PROPOSED GROUND ELEVATION (FT.)	EXISTING GROUND ELEVATION (FT.)
23	436+25.68	32.33	14.378	5.126	4.773
24	436+28.71	32.33	14.628	5.191	4.801
	436+28.71	32.33	13.128	5.191	4.801
25	436+33.01	32.33	13.128	5.282	4.846
	436+33.01	32.33	24.229	5.282	4.846
26	436+62.34	32.33	22.763	5.624	4.781
27	436+75.00	32.33	22.130	5.602	4.660
28	437+00.00	32.33	20.880	5.559	4.467
29	437+25.00	32.33	19.630	5.553	4.266
30	437+50.00	32.33	18.380	5.546	4.289
31	437+75.00	32.33	17.130	5.526	4.308
32	438+00.00	32.33	15.880	5.506	4.189
33	438+25.00	32.33	14.630	5.476	3.975
34	438+50.00	32.33	13.390	5.445	4.226
35	438+75.00	32.33	12.231	5.407	4.305
36	438+99.20	32.33	11.199	5.370	4.291
37	439+25.00	34.33	10.157	5.284	4.132
38	439+50.00	36.03	9.248	5.199	4.071
39	439+75.00	37.53	8.650	5.199	3.932
40	440+00.00	38.80	8.143	5.199	3.642
41	440+25.00	39.86	7.573	5.199	3.188
42	440+50.00	40.70	7.525	5.199	3.485
43	440+60.71	41.00	7.348	5.199	3.528
44	440+75.00	41.00	7.130	5.199	3.552
45	440+96.45	41.00	6.862	5.199	3.439

NOTICE: THE OFFICIAL RECORD OF THIS SHEET IS THE ELECTRONIC FILE DIGITALLY SIGNED AND SEALED UNDER RULE 61G15-23.004, F.A.C.

REVISIONS

DATE	BY	DESCRIPTION	DATE	BY	DESCRIPTION

Kisinger Campo & Associates Corp.
201 N. Franklin Street
Suite 400
Tampa, FL 33602
Alfredo Jose Layrisse, PE No. 75610

DRAWN BY: SKB 02-21
CHECKED BY: KL 02-21
DESIGNED BY: SKB 02-21
CHECKED BY: KL 02-21

LEE COUNTY PUBLIC WORKS
DEPARTMENT OF TRANSPORTATION

ROAD NO.	COUNTY	COUNTY PROJECT No
CR 865	LEE	CN160002

SHEET TITLE: ELEVATION - MSE WALL 2 (2 OF 2)

PROJECT NAME: ESTERO BLVD. (CR 865) OVER BIG CARLOS PASS

REF. DWG. NO.

SHEET NO. BW-5

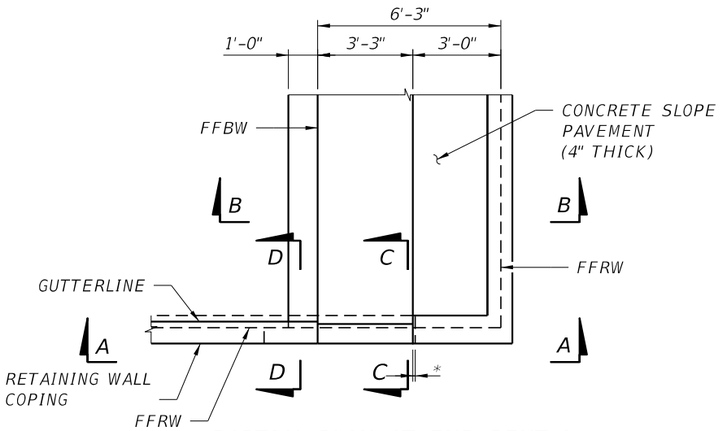

PARTIAL PLAN AT END BENT 1

* 1" EXPANSION JOINT MATERIAL

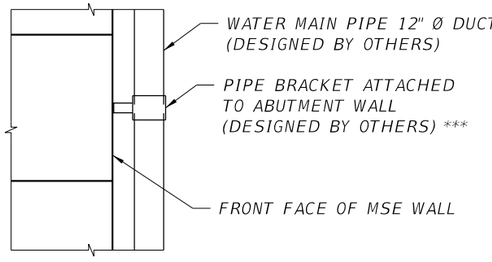

*** PROVIDE BRACKET DESIGN AND MEANS OF ATTACHMENT TO THE WALL, AS PART OF THE SHOP DRAWGINS, TO THE EOR FOR REVIEW

PARTIAL ABUTMENT WALL ELEVATION

SHOWING TYPICAL DETAIL FOR WATER MAIN PIPE

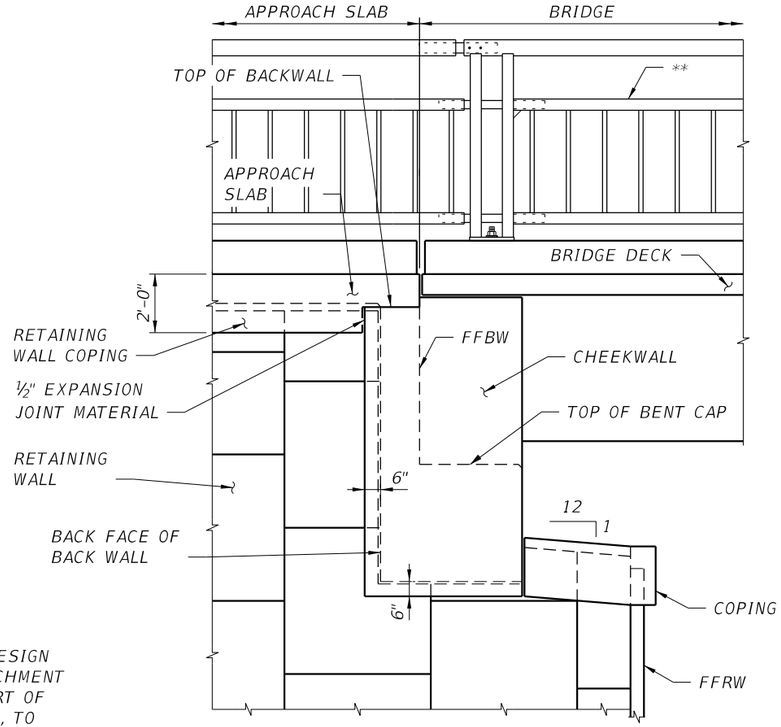

VIEW A-A

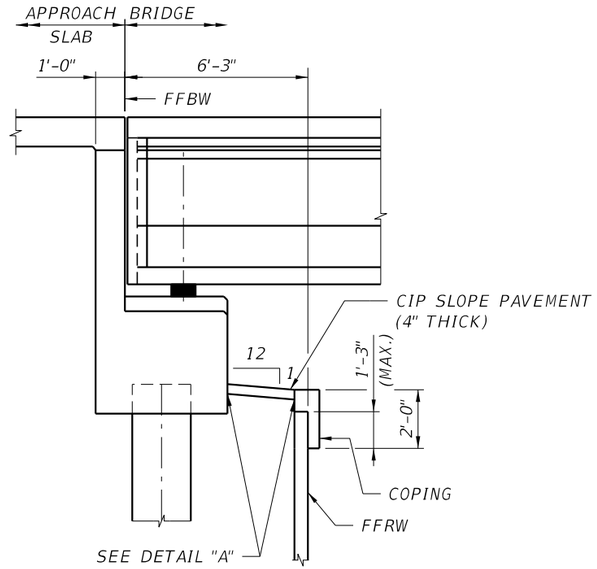

SECTION B-B

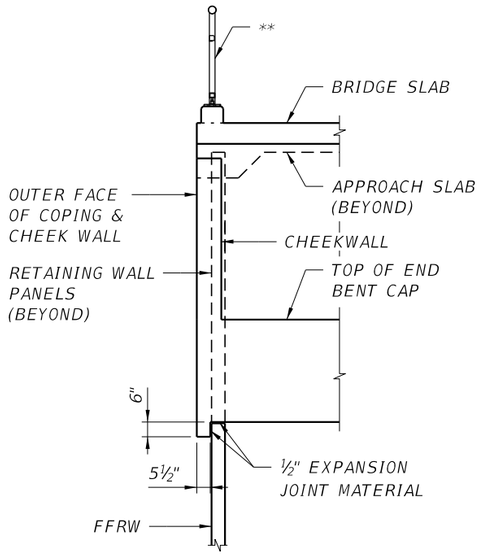

SECTION C-C

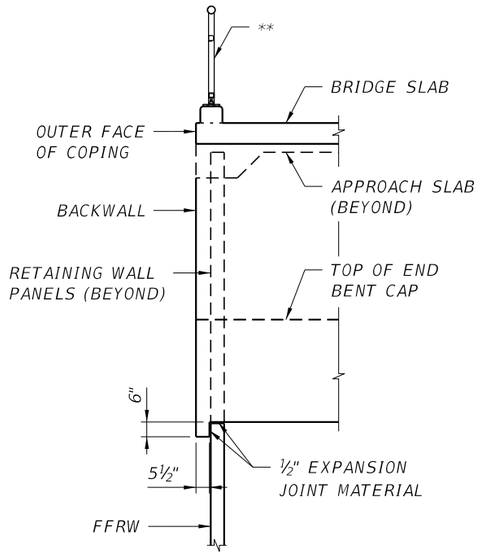

SECTION D-D

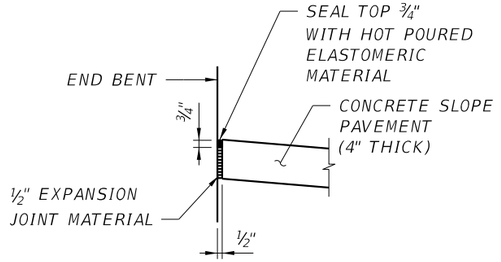

DETAIL "A"

NOTE:
DETAIL "A" APPLIES TO ALL CONTACT SURFACES OF SLOPE PAVEMENT WITH END BENTS, COPING AND CONSTRUCTION JOINTS AND ALL OTHER JOINTS AS DIRECTED BY THE ENGINEER.

** 42" BRIDGE PEDESTRIAN/BICYCLE RAILING (ALUMINUM), SCHEME 2, INDEX 515-061 (TYP.)

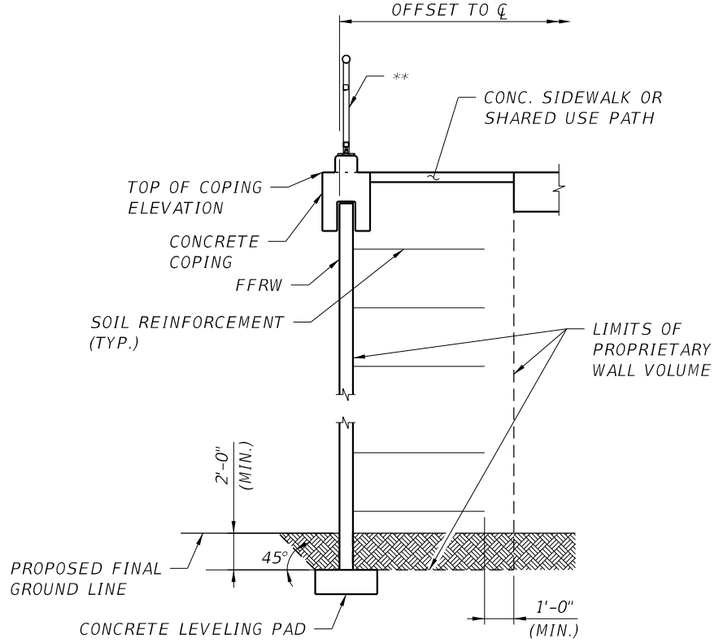

TYPICAL WALL SECTION

NOTICE: THE OFFICIAL RECORD OF THIS SHEET IS THE ELECTRONIC FILE DIGITALLY SIGNED AND SEALED UNDER RULE 61G15-23.004, F.A.C.

REVISIONS					
DATE	BY	DESCRIPTION	DATE	BY	DESCRIPTION

Kisinger Campo & Associates Corp.
201 N. Franklin Street
Suite 400
Tampa, FL 33602
Alfredo Jose Layrisse, PE No. 75610

DRAWN BY:	CHECKED BY:	DESIGNED BY:	CHECKED BY:
JBH 07-19	AJL 07-19	AJL 07-19	ATB 07-19

LEE COUNTY PUBLIC WORKS
DEPARTMENT OF TRANSPORTATION

ROAD NO.	COUNTY	COUNTY PROJECT No
CR 865	LEE	CN160002

SHEET TITLE: MSE WALL DETAILS

REF. DWG. NO.:

PROJECT NAME: ESTERO BLVD. (CR 865) OVER BIG CARLOS PASS

SHEET NO.: BW-6

jhanna 2/24/2022 3:23:57 PM c:\pwworkingdir\kca-pw.bentley.com_kca-pw-01\josh hanna\dms00783\B1MSEwall01.dgn

PERMANENT MSE RETAINING WALL SYSTEM DATA TABLES

GEOTECHNICAL INFORMATION						Table Date 1-01-11
Wall 1A, 1B & 1C	Reinforced Soil & Random Backfill	Loose Sand w/ Silt	Med. Dense Sand w/ Silt	Loose Sand w/ Silt	Very Dense Silty Sand	Weathered Limestone/Caprock
Depth Below Existing Ground Line (ft.)	——	0 – 6	6 – 13	13 – 28	28 – 33	33 – 40
Effective Unit Weight (pcf)	105	42.6	47.6	42.6	62.6	52.6
Cohesion (psf)	——	——	——	——	——	——
Internal Friction Angle	30	29	30	29	34	38

GEOTECHNICAL INFORMATION				Table Date 1-01-11
Wall 2A, 2B & 2C	Reinforced Soil & Random Backfill	Loose to Med. Dense Sand w/ Silt and Shell	Weathered Limestone/Caprock	Weathered Limestone/Caprock
Depth Below Existing Ground Line (ft.)	——	0 – 23	23 – 28	28 – 40
Effective Unit Weight (pcf)	105	42.6	72.6	52.6
Cohesion (psf)	——	——	8,000	——
Internal Friction Angle	30	29	——	37

NOTE:
IF THE UNIT WEIGHT AND/OR INTERNAL FRICTION ANGLE OF THE FILL PROPOSED BY THE CONTRACTOR DIFFERS FROM THAT SHOWN ABOVE, THE PROJECT ENGINEER WILL CONTACT BOTH THE DISTRICT GEOTECHNICAL ENGINEER AND THE WALL DESIGNER FOR A POSSIBLE REDESIGN.

RETAINING WALL VARIABLES					Table Date 7-01-13
Wall No.	Wall Settlement				Design High Water Elevation (ft.)
	Long Term Settlement (in.)	Short Term Settlement (in.)	Differential Settlement		
			Longitudinal (%) (ft./100ft.)	Transverse (in.)	
1A, 1B & 1C	<0.5	0.5 – 1.5	0.5	N/A	+14.3
2A, 2B & 1C	<0.5	0.5 – 4.2	0.15	N/A	+14.3

NOTES:
1. DESIGN WALLS FOR THE SETTLEMENTS NOTED IN THE TABLE.
2. LONG TERM SETTLEMENT IS MEASURED FROM THE END OF STAGE ONE OF THE WALL CONSTRUCTION THROUGH THE SERVICE LIFE OF THE WALL.
3. SHORT TERM SETTLEMENT IS MEASURED DURING THE BEGINNING OF WALL CONSTRUCTION .
4. TRANSVERSE DIFFERENTIAL SETTLEMENT IS ONLY APPLICABLE FOR EMBANKMENT WIDENINGS.
5. REFER TO SPECIFICATION 548 FOR TYPE OF BACKFILL MATERIAL BASED ON DESIGN HIGH WATER ELEVATION

SOIL REINFORCEMENT LENGTHS FOR EXTERNAL STABILITY											Table Date 1-01-11
Walls 1A, 1B, 1C	Wall Height (ft.)	≤8	10	12	14	16	18	20	22	24	
	Reinforcement Length (ft.)	10	12	13	16	18	18	20	22	24	
	Factored Bearing Resistance (psf)	2,603	2,932	2,982	3,590	3,920	3,685	5,499	6,022	6,542	
Walls 2A & 2B	Wall Height (ft.)	≤8	10	12	14	16	18	20	22	24	
	Reinforcement Length (ft.)	11	14	17	19	22	25	28	30	33	
	Factored Bearing Resistance (psf)	2,869	3,465	4,061	4,397	4,999	5,636	6,272	6,650	7,284	
Wall 2C	Wall Height (ft.)	≤8	10	12	14	16	18	20	22	24	
	Reinforcement Length (ft.)	10	12	14	17	19	21	24	26	28	
	Factored Bearing Resistance (psf)	2,603	2,932	3,261	3,864	4,200	4,578	5,225	5,602	5,980	

NOTES:
1. THE REINFORCEMENT STRAP LENGTHS SHOWN ABOVE ARE THE MINIMUM LENGTHS REQUIRED FOR EXTERNAL STABILITY. THE REINFORCEMENT LENGTHS USED IN THE CONSTRUCTION OF THE RETAINING WALLS WILL BE THE LONGER OF THAT REQUIRED FOR EXTERNAL OR INTERNAL STABILITY (DETERMINED BY PROPRIETARY WALL COMPANIES).
2. THE FACTORED BEARING RESISTANCES SHOWN ABOVE ARE THE CRITICAL (LOWEST) VALUES FROM ALL THE LOAD CASES ANALYZED USING LRFD METHODOLOGY.

NOTES:

1. CONCRETE FACING PANEL SURFACES TREATMENT WILL BE A FLUTED, TRAPEZOID, V-GROOVE, FRACTURED RIB ¾" ON 1½" CENTERS SIMILAR TO BURKE FORM LINER, PATTERN NO. BG312 (WATERFALL).

2. IF REQUIRED, THE SOIL REINFORCEMENT AND FASTENERS FOR THE ABUTMENT BACK WALL WILL BE DESIGNED AND FURNISHED BY THE PROPRIETARY WALL COMPANY. THE SOIL REINFORCEMENT WILL BE DESIGNED TO RESIST A FACTORED HORIZONTAL LOAD OF 8.93 KIPS/FT. OF BACK WALL WIDTH. THE COST OF SOIL REINFORCEMENT AND FASTENERS (IF REQUIRED) WILL BE INCLUDED IN THE COST OF THE RETAINING WALL SYSTEM.

3. APPLICABLE FDOT WALL TYPES FOR EACH WALL LOCATION ARE LISTED BELOW. SEE THE APPROVED PRODUCTS LIST FOR APPROVED WALL SYSTEMS AND STANDARD PLANS INDEX 548-020 FOR ALLOWABLE WALL TYPE SUBSTITUTIONS.
WALL NO. 1 – FDOT WALL TYPE 2F WITH PLASTIC SOIL REINFORCEMENT
WALL NO. 2 – FDOT WALL TYPE 2F WITH PLASTIC SOIL REINFORCEMENT

4. CONCRETE FOR COPING AND/OR JUNCTION SLAB SHALL BE CLASS IV (F'C = 5,500 PSI) WITH HIGHLY REACTIVE POZZOLANS.

5. SEE STANDARD PLANS INDEX 548-020 FOR GENERAL NOTES AND DETAILS.

NOTICE: THE OFFICIAL RECORD OF THIS SHEET IS THE ELECTRONIC FILE DIGITALLY SIGNED AND SEALED UNDER RULE 61G15-23.004, F.A.C.

REVISIONS					
DATE	BY	DESCRIPTION	DATE	BY	DESCRIPTION

Kisinger Campo & Associates Corp.
201 N. Franklin Street
Suite 400
Tampa, FL 33602
Alfredo Jose Layrisse, PE No. 75610

DRAWN BY: JBH 04-21
CHECKED BY: AJL 04-21
DESIGNED BY: KL 04-21
CHECKED BY: SKB 04-21

LEE COUNTY PUBLIC WORKS
DEPARTMENT OF TRANSPORTATION

ROAD NO.	COUNTY	COUNTY PROJECT No
CR 865	LEE	CN160002

SHEET TITLE: PERMANENT MSE RETAINING WALL DATA TABLES
REF. DWG. NO.:
PROJECT NAME: ESTERO BLVD. (CR 865) OVER BIG CARLOS PASS
SHEET NO.: BW-7

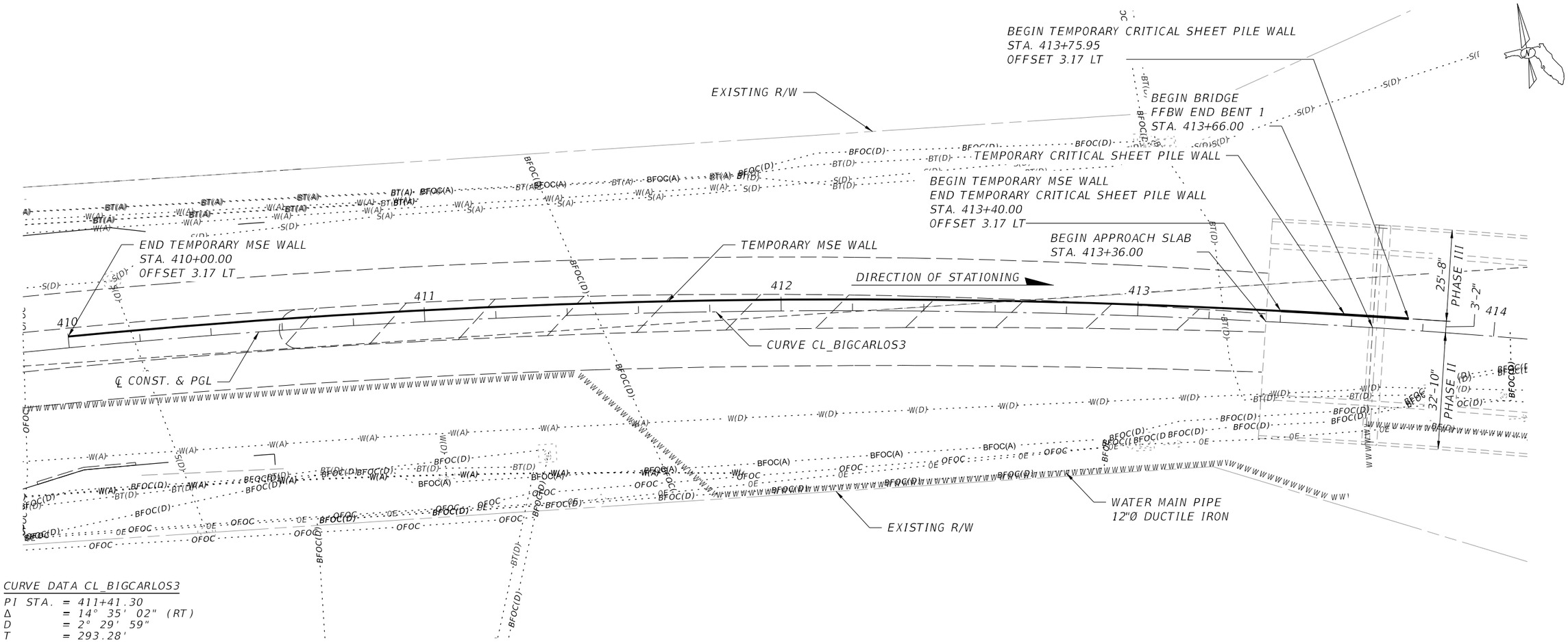

CURVE DATA CL_BIGCARLOS3

PI STA. = 411+41.30
Δ = 14° 35' 02" (RT)
D = 2° 29' 59"
T = 293.28'
L = 583.40'
R = 2,292.00'
PC STA. = 408+48.02
PT STA. = 414+31.41

PLAN

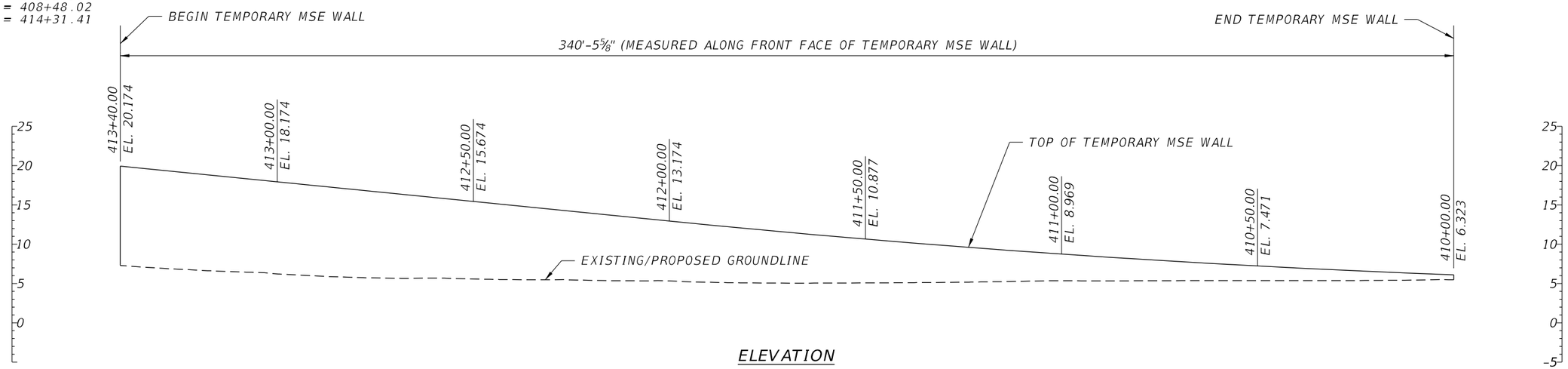

ELEVATION

REVISIONS					
DATE	BY	DESCRIPTION	DATE	BY	DESCRIPTION

Kisinger Campo & Associates Corp.
201 N. Franklin Street
Suite 400
Tampa, FL 33602
Alfredo Jose Layrisse, PE No. 75610

DRAWN BY:	CHECKED BY:	DESIGNED BY:	CHECKED BY:
ARF 06-19	AJL 06-19	DAA 06-19	JHD 06-19

LEE COUNTY PUBLIC WORKS
DEPARTMENT OF TRANSPORTATION

ROAD NO.	COUNTY	COUNTY PROJECT No
CR 865	LEE	CN160002

SHEET TITLE: TEMPORARY MSE RETAINING WALL

REF. DWG. NO.:

PROJECT NAME: ESTERO BLVD. (CR 865) OVER BIG CARLOS PASS

SHEET NO.: BW-8

NOTICE: THE OFFICIAL RECORD OF THIS SHEET IS THE ELECTRONIC FILE DIGITALLY SIGNED AND SEALED UNDER RULE 61G15-23.004, F.A.C.

TEMPORARY MSE RETAINING WALL SYSTEM DATA TABLES

GEOTECHNICAL INFORMATION						Table Date 1-01-11
Temporary MSE Wall	Reinforced Soil & Random Backfill	Loose Sand w/ Silt	Med. Dense Sand w/ Silt	Loose Sand w/ silt	Very Dense Silty Sand	Weathered Limestone/Caprock
Depth Below Existing Ground Line (ft.)	——	0 - 6	6 - 13	13 - 28	28 - 33	33 - 40
Effective Unit Weight (pcf)	105	42.6	47.6	42.6	62.6	52.6
Cohesion (psf)	——	——	——	——	——	——
Internal Friction Angle	30	29	30	29	34	38

NOTE:
IF THE UNIT WEIGHT AND/OR INTERNAL FRICTION ANGLE OF THE FILL PROPOSED BY THE CONTRACTOR DIFFERS FROM THAT SHOWN ABOVE, THE PROJECT ENGINEER WILL CONTACT BOTH THE DISTRICT GEOTECHNICAL ENGINEER AND THE WALL DESIGNER FOR A POSSIBLE REDESIGN.

RETAINING WALL VARIABLES				Table Date 07-01-13
Wall No.	Wall Settlement			Air Contaminants Classification
	Long Term Settlement (in.)	Short Term Settlement (in.)	Differential Settlement (%) (ft./100ft.)	
Temp. MSE Walls	<0.5	0.5 - 1.5	0.05	High

NOTES:
1. DESIGN WALLS FOR THE SETTLEMENTS NOTED IN THE TABLE.
2. LONG TERM SETTLEMENT IS MEASURED FROM THE BEGINNING OF WALL CONSTRUCTION, THROUGH THE SERVICE LIFE OF THE WALL.
3. SHORT TERM SETTLEMENT IS MEASURED DURING THE BEGINNING OF WALL CONSTRUCTION.

SOIL REINFORCEMENT LENGTHS FOR EXTERNAL STABILITY										Table Date 1-01-11	
Temporary MSE Walls	Wall Height (ft.)	≤8	10	12	14	16	18	20	22		
	Reinforcement Length (ft.)	10	12	13	16	18	18	20	22		
	Factored Bearing Resistance (psf)	1,833	2,162	2,212	2,820	3,149	2,915	4,487	5,009		

NOTES:
1. THE REINFORCEMENT STRAP LENGTHS SHOWN ABOVE ARE THE MINIMUM LENGTHS REQUIRED FOR EXTERNAL STABILITY. THE REINFORCEMENT LENGTHS USED IN THE CONSTRUCTION OF THE RETAINING WALLS WILL BE THE LONGER OF THAT REQUIRED FOR EXTERNAL OR INTERNAL STABILITY (DETERMINED BY PROPRIETARY WALL COMPANIES).
2. THE FACTORED BEARING RESISTANCES SHOWN ABOVE ARE THE CRITICAL (LOWEST) VALUES FROM ALL THE LOAD CASES ANALYZED USING LRFD METHODOLOGY.

NOTES:
1. SEE THE APPROVED PRODUCTS LIST FOR APPROVED WALL SYSTEMS (FDOT WALL TYPE 3).
2. SEE STANDARD PLANS INDEX 548-030 FOR GENERAL NOTES AND DETAILS.

NOTICE: THE OFFICIAL RECORD OF THIS SHEET IS THE ELECTRONIC FILE DIGITALLY SIGNED AND SEALED UNDER RULE 61G15-23.004, F.A.C.

REVISIONS

DATE	BY	DESCRIPTION	DATE	BY	DESCRIPTION

Kisinger Campo & Associates Corp.
201 N. Franklin Street
Suite 400
Tampa, FL 33602
Alfredo Jose Layrisse, PE No. 75610

DRAWN BY: JBH 04-21
CHECKED BY: KL 04-21
DESIGNED BY: KL 04-21
CHECKED BY: SKB 12-19

LEE COUNTY PUBLIC WORKS
DEPARTMENT OF TRANSPORTATION

ROAD NO.	COUNTY	COUNTY PROJECT No
CR 865	LEE	CN160002

SHEET TITLE: TEMPORARY MSE RETAINING WALL DATA TABLES

PROJECT NAME: ESTERO BLVD. (CR 865) OVER BIG CARLOS PASS

REF. DWG. NO.

SHEET NO. BW - 9

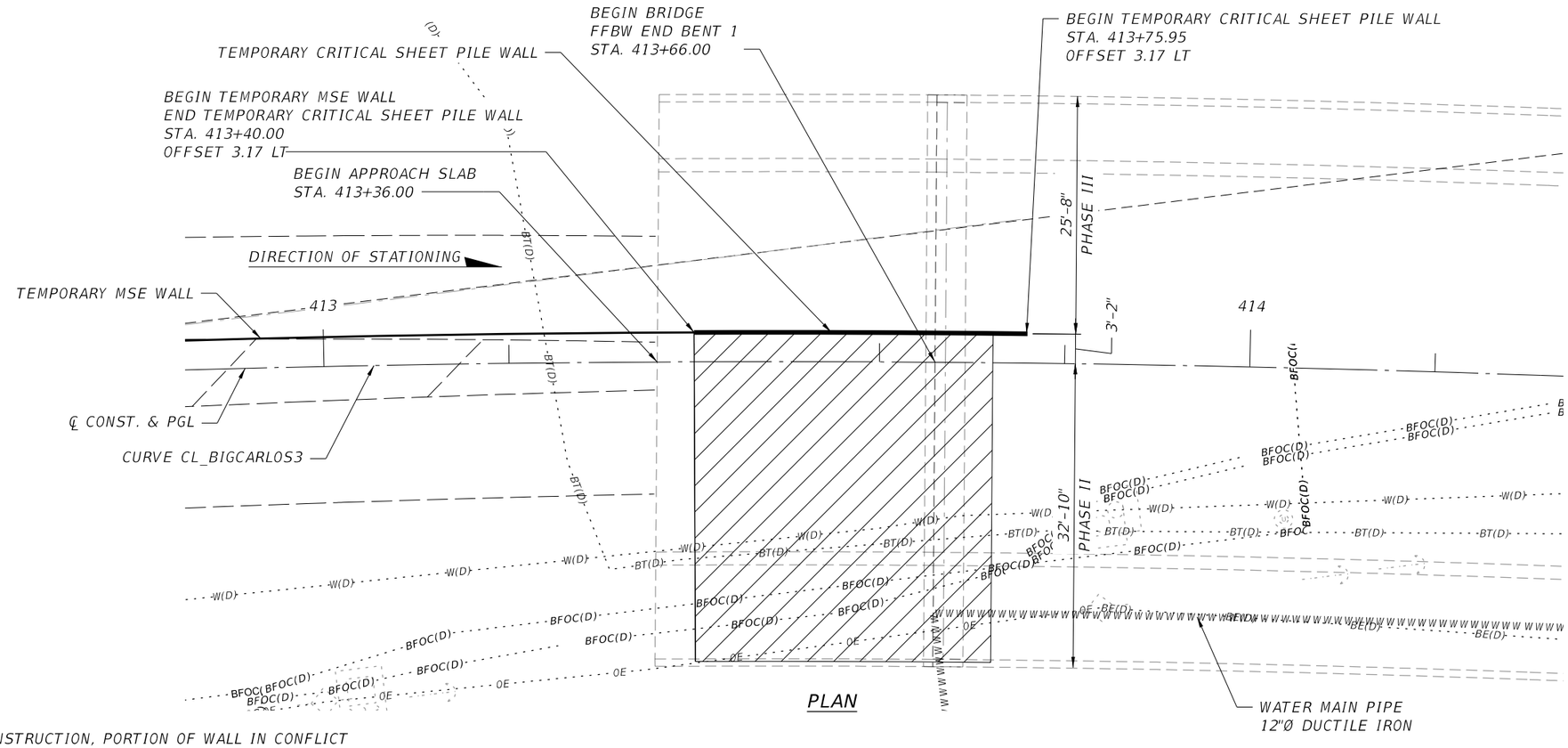

PLAN

NOTES:

1. DURING PHASE III OF CONSTRUCTION, PORTION OF WALL IN CONFLICT WITH FORMING AND CASTING END BENT 1 AND MSE WALL 1 CONSTRUCTION, WILL NEED TO BE REMOVED. COST OF REMOVAL AND MAINTAINING EXISTING TRAVEL CONDITIONS WILL BE INCIDENTAL TO THE COST OF THE TEMPORARY CRITICAL WALL.

2. ANTICIPATE THAT DIFFICULT INSTALLATION OF SHEET PILES MAY BE ENCOUNTERED DUE TO THE PRESENCE OF COMPACTED DENSE SANDS, CEMENTED SANDS, AND DENSE LIMESTONE/CAPROCK AT THE PROJECT SITE. VARIATIONS IN THE DEPTH AND RELATIVE DENSITY/CONSISTENCY OF SUCH MATERIALS SHALL BE ANTICIPATED. SPECIALIZED EQUIPMENT AND/OR INSTALLATION METHODS, INCLUDING THE USE OF PREFORMED PILE HOLES, PUNCHING, AND/OR OTHER METHODS MAY BE REQUIRED TO INSTALL THE SHEET PILES TO THE REQUIRED MINIMUM TIP ELEVATION. JETTING IS NOT ALLOWED. THE COST ASSOCIATED WITH THE DIFFICULT INSTALLATION INCLUDING THE COST OF PREFORMED PILE HOLES, PUNCHING, AND/OR OTHER METHODS SHALL BE INCLUDED IN THE UNIT BID PRICE.

3. DUE TO PROXIMITY TO MSE WALL PANELS AND STRAPS, TEMPORARY SHEET PILE WALL IS TO BE ABONDONED IN THE PLACE. CUT SHEET PILE A MINIMUM OF 2FT BELOW FINAL GRADE. ANY COST ASSOCIATED OF ABANDONING AND CUTTING THE SHEET PILE IS INCIDENTAL TO THIS PAY ITEM.

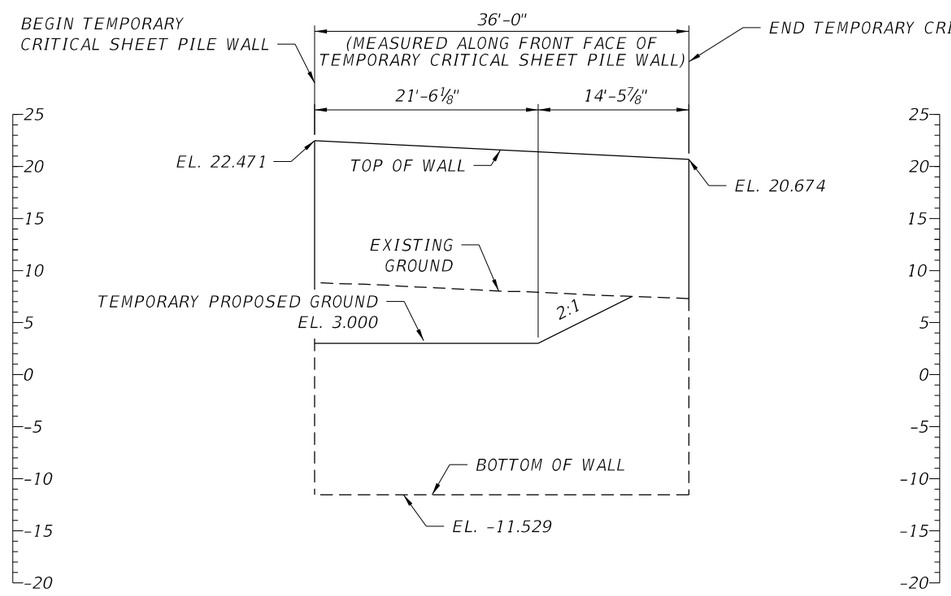

ELEVATION

LEGEND:

COURSE AGGREGATE REQUIRED BEYOND LIMITS OF PROPRIETARY WALL VOLUME ADJACENT TO TEMPORARY SHEET PILE WALL. COST OF THE FILL IS INCIDENTAL TO THE COST OF THE TEMPORARY WALL

CURVE DATA CL_BIGCARLOS3

PI STA. = 411+41.30
Δ = 14° 35' 02" (RT)
D = 2° 29' 59"
T = 293.28'
L = 583.40'
R = 2,292.00'
PC STA. = 408+48.02
PT STA. = 414+31.41

NOTICE: THE OFFICIAL RECORD OF THIS SHEET IS THE ELECTRONIC FILE DIGITALLY SIGNED AND SEALED UNDER RULE 61G15-23.004, F.A.C.

REVISIONS					
DATE	BY	DESCRIPTION	DATE	BY	DESCRIPTION

Kisinger Campo & Associates Corp.
201 N. Franklin Street
Suite 400
Tampa, FL 33602
Alfredo Jose Layrisse, PE No. 75610

DRAWN BY: JBH 05-21
CHECKED BY: AJL 05-21
DESIGNED BY: DAA 06-19
CHECKED BY: JHD 06-19

LEE COUNTY PUBLIC WORKS
DEPARTMENT OF TRANSPORTATION

ROAD NO.	COUNTY	COUNTY PROJECT No
CR 865	LEE	CN160002

SHEET TITLE: TEMPORARY CRITICAL SHEET PILE WALL

REF. DWG. NO.

PROJECT NAME: ESTERO BLVD. (CR 865) OVER BIG CARLOS PASS

SHEET NO. BW - 10

STEEL SHEET PILE WALL, CANTILEVER DATA TABLE

Table Date 07-01-12

CONSTRUCTION INFORMATION							DESIGN PARAMETERS				
WALL LOCATION		MINIMUM * SECTION MODULUS (in^3/ft)		MINIMUM REQUIRED MOMENT OF INERTIA (in^4/ft)	MINIMUM WALL TIP ELEVATION (ft)	WALL TOP ELEV. (ft)	SOIL ELEVATION		WATER ELEVATION		DESIGN LIVE LOAD (psf)
							** FRONT OF WALL (ft)	BACK OF WALL (ft)	FRONT OF WALL (ft)	BACK OF WALL (ft)	
STATION (begin to end)	OFFSET (ft)	A-328 (ksi) fy=39 ksi	A-572 (ksi) fy=50 ksi								
413+40.00 TO 413+75.95	3.17' LT	24.5	19.1	370.4	-11.53	***	8.94	22.47	8.94	10.94	230.0

* Minimum Section Modulus is based on Hot Rolled Sections. For Cold Rolled Sections, increase Minimum Section Modulus by 20%.
** Minimum of Design Ground Surface or Design Scour Depth.
*** Top of wall varies, see elevation view for elevation along wall.

NOTES:

1. Wall deflections will cause distress of adjacent pavement during construction. The Contractor shall maintain pavement conditions behind the sheet pile walls during construction. The cost of maintaining adjacent pavement shall be included in the cost of the Temporary Steel Sheet Pile Wall.

2. The Design Parameters indicated in this table were used in the sheet pile wall analysis. If the Contractor plans operations, which exceed the design parameters shown above, the Contractor's Specialty Engineer will redesign the wall to resist construction loads at a maximum deflection of 1.5 inches.

NOTICE: THE OFFICIAL RECORD OF THIS SHEET IS THE ELECTRONIC FILE DIGITALLY SIGNED AND SEALED UNDER RULE 61G15-23.004, F.A.C.

REVISIONS					
DATE	BY	DESCRIPTION	DATE	BY	DESCRIPTION

Kisinger Campo & Associates Corp.
201 N. Franklin Street
Suite 400
Tampa, FL 33602
Alfredo Jose Layrisse, PE No. 75610

DRAWN BY: JBH 09-21
CHECKED BY: JHJ 09-21
DESIGNED BY: KL 09-21
CHECKED BY: JHJ 09-21

LEE COUNTY PUBLIC WORKS
DEPARTMENT OF TRANSPORTATION

ROAD NO.	COUNTY	COUNTY PROJECT No
CR 865	LEE	CN160002

SHEET TITLE: TEMPORARY CRITICAL SHEET PILE WALL DATA TABLES

PROJECT NAME: ESTERO BLVD. (CR 865) OVER BIG CARLOS PASS

REF. DWG. NO.

SHEET NO. BW-11

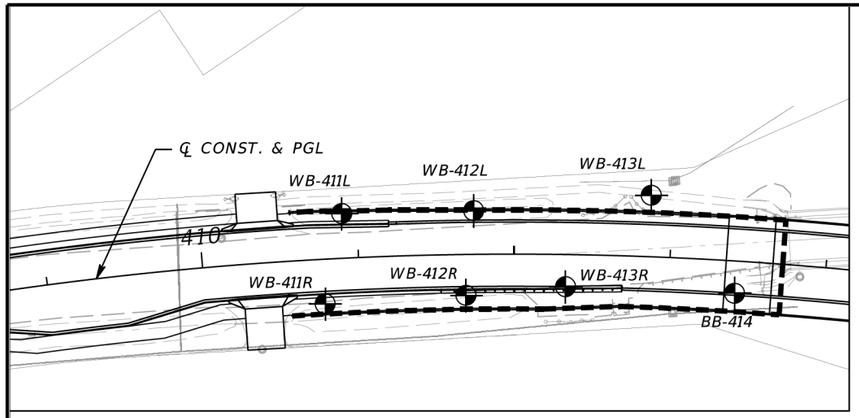

BORING LOCATION PLAN

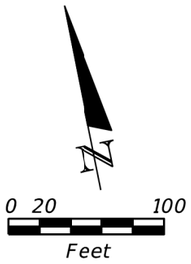

LEGEND

- GRAY TO BROWN FINE SAND TO SAND WITH SILT (SP/SP-SM)
- GRAY TO BROWN SILTY SAND (SM)
- WEATHERED LIMESTONE/CAPROCK TO CALCAREOUS CLAY
- GRAY TO BROWN SHELLY SAND (SP/SP-SM)
- GRAY TO DARK GRAY INDURATED CLAY (CL/CH)
- DARK BROWN ORGANIC SAND TO ORGANIC SILTY SAND TO PEAT (Pt)

RECOMMENDED ENVIRONMENTAL CLASSIFICATION:

SUBSTRUCTURE	CONCRETE: EXTREMELY AGGRESSIVE
SUBSTRUCTURE	STEEL: EXTREMELY AGGRESSIVE
SUPERSTRUCTURE	EXTREMELY AGGRESSIVE

NOTE:

BORING LOCATIONS AND ELEVATIONS DENOTED WITH AN ASTERISK "*" WERE PROVIDED BY THE PROJECT SURVEYOR. ALL OTHER BORING LOCATIONS AND ELEVATIONS WERE DETERMINED USING PROJECT DESIGN FILES PROVIDED BY KISINGER CAMPO AND ASSOCIATES, CORP. IN CONJUNCTION WITH GPS COORDINATES OBTAINED BY TIERRA, INC. IN THE FIELD AND SHOULD BE CONSIDERED APPROXIMATE.

SP	UNIFIED SOIL CLASSIFICATION SYSTEM (ASTM D 2487) GROUP SYMBOL AS DETERMINED BY VISUAL REVIEW AND LABORATORY TESTING ON SELECTED SAMPLES FOR CONFIRMATION OF VISUAL REVIEW.
N	NUMBERS TO THE LEFT OF BORINGS INDICATE SPT VALUE FOR 12 INCHES OF PENETRATION (UNLESS OTHERWISE NOTED).
50/4	NUMBER OF BLOWS FOR 4 INCHES OF PENETRATION
HA	HAND AUGERED TO VERIFY UTILITY CLEARANCE
WH	SPLIT-SPOON SAMPLER ADVANCED UNDER WEIGHT OF ROD AND HAMMER
-200	PERCENT PASSING #200 SIEVE
NMC	NATURAL MOISTURE CONTENT (%)
LL	LIQUID LIMIT (%)
PI	PLASTICITY INDEX (%)
OC	ORGANIC CONTENT (%)
NP	NON-PLASTIC
NAVD 88	NORTH AMERICAN VERTICAL DATUM OF 1988
	APPROXIMATE SPT BORING LOCATION
	GROUNDWATER LEVEL ENCOUNTERED DURING FIELD EXPLORATIONS
100	LOSS OF CIRCULATION OF DRILLING FLUID (%)
	CASING
P	ASPHALT PAVEMENT AND/OR BASE MATERIAL
T	BORINGS PROFILE TRUNCATED FOR CLARITY. FOR FULL BORING PROFILE PLEASE REFER TO THE BRIDGE REPORT OF CORE BORINGS SHEETS.

BOR # WB-411L*
STA. 410+91
REF. ℄ CONST.
OFF. 29' LT
ELEV. 3.7
DATE 11/22/2019
DRILLER I. POORAN
HAMMER AUTOMATIC
RIG D-25

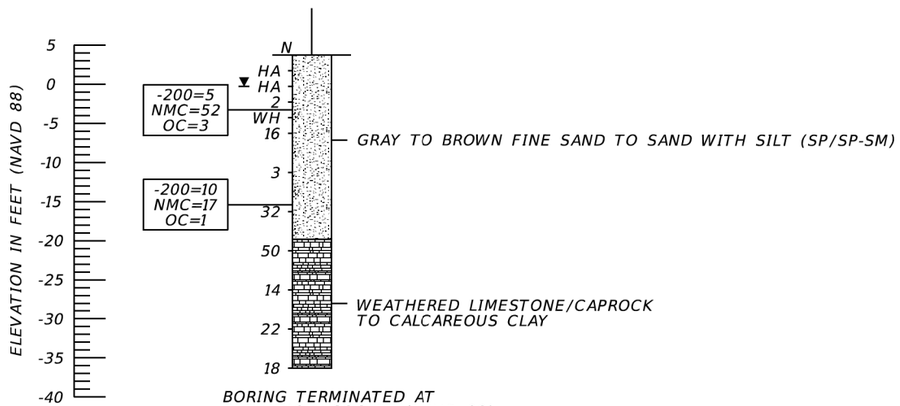

BORING TERMINATED AT
ELEVATION -36.3 FT (NAVD 88)
LATITUDE: N 26.40485
LONGITUDE: W 81.88403

BOR # WB-411R*
STA. 410+77
REF. ℄ CONST.
OFF. 28' RT
ELEV. 4.5
DATE 11/22/2019
DRILLER I. POORAN
HAMMER AUTOMATIC
RIG D-25

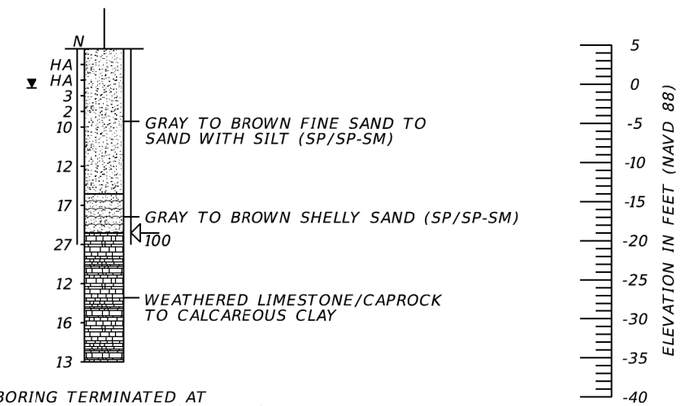

BORING TERMINATED AT
ELEVATION -35.5 FT (NAVD 88)
LATITUDE: N 26.40470
LONGITUDE: W 81.88409

	SAFETY HAMMER	AUTOMATIC HAMMER
GRANULAR MATERIALS- RELATIVE DENSITY	SPT N-VALUE (BLOWS/FT.)	SPT N-VALUE (BLOWS/FT.)
VERY LOOSE	LESS THAN 4	LESS THAN 3
LOOSE	4 to 10	3 to 8
MEDIUM DENSE	10 to 30	8 to 24
DENSE	30 to 50	24 to 40
VERY DENSE	GREATER THAN 50	GREATER THAN 40
SILTS AND CLAYS CONSISTENCY	SPT N-VALUE (BLOWS/FT.)	SPT N-VALUE (BLOWS/FT.)
VERY SOFT	LESS THAN 2	LESS THAN 1
SOFT	2 to 4	1 to 3
FIRM	4 to 8	3 to 6
STIFF	8 to 15	6 to 12
VERY STIFF	15 to 30	12 to 24
HARD	GREATER THAN 30	GREATER THAN 24

MSE WALL NO. 1

REVISIONS

DATE	BY	DESCRIPTION	DATE	BY	DESCRIPTION

ERICK M. FREDERICK, P.E.
P.E. LICENSE NUMBER 63920
TIERRA, INC.
7351 TEMPLE TERRACE HIGHWAY
TAMPA, FLORIDA 33637

DRAWN BY: BJS
CHECKED BY: TM
DESIGNED BY: BJS
CHECKED BY: EMF

LEE COUNTY PUBLIC WORKS
DEPARTMENT OF TRANSPORTATION

ROAD NO.	COUNTY	COUNTY PROJECT No
CR 865	LEE	CN160002

SHEET TITLE: REPORT OF CORE BORINGS (1 OF 7)
REF. DWG. NO.
PROJECT NAME: ESTERO BLVD. (CR 865) OVER BIG CARLOS PASS
SHEET NO. BW - 12

NOTICE: THE OFFICIAL RECORD OF THIS SHEET IS THE ELECTRONIC FILE DIGITALLY SIGNED AND SEALED UNDER RULE 61G15-23.004, F.A.C.

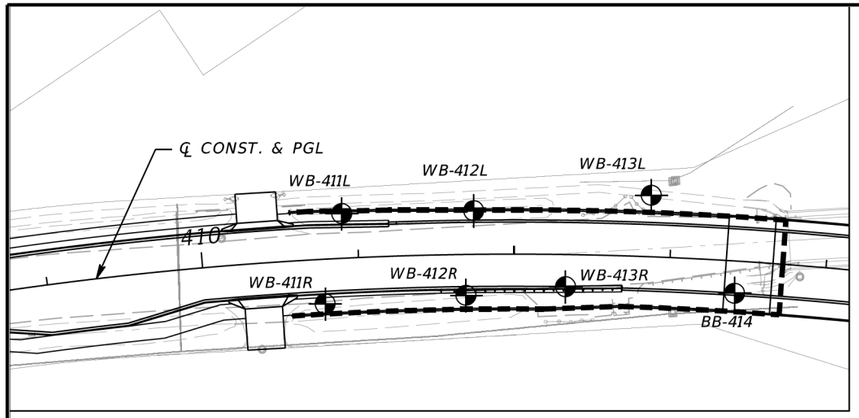

BORING LOCATION PLAN

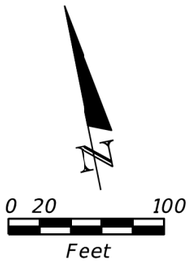

LEGEND

- GRAY TO BROWN FINE SAND TO SAND WITH SILT (SP/SP-SM)
- GRAY TO BROWN SILTY SAND (SM)
- WEATHERED LIMESTONE/CAPROCK TO CALCAREOUS CLAY
- GRAY TO BROWN SHELLY SAND (SP/SP-SM)
- GRAY TO DARK GRAY INDURATED CLAY (CL/CH)
- DARK BROWN ORGANIC SAND TO ORGANIC SILTY SAND TO PEAT (Pt)

RECOMMENDED ENVIRONMENTAL CLASSIFICATION:

SUBSTRUCTURE	CONCRETE: EXTREMELY AGGRESSIVE
SUBSTRUCTURE	STEEL: EXTREMELY AGGRESSIVE
SUPERSTRUCTURE	EXTREMELY AGGRESSIVE

NOTE:

BORING LOCATIONS AND ELEVATIONS DENOTED WITH AN ASTERISK "*" WERE PROVIDED BY THE PROJECT SURVEYOR. ALL OTHER BORING LOCATIONS AND ELEVATIONS WERE DETERMINED USING PROJECT DESIGN FILES PROVIDED BY KISINGER CAMPO AND ASSOCIATES, CORP. IN CONJUNCTION WITH GPS COORDINATES OBTAINED BY TIERRA, INC. IN THE FIELD AND SHOULD BE CONSIDERED APPROXIMATE.

SP	UNIFIED SOIL CLASSIFICATION SYSTEM (ASTM D 2487) GROUP SYMBOL AS DETERMINED BY VISUAL REVIEW AND LABORATORY TESTING ON SELECTED SAMPLES FOR CONFIRMATION OF VISUAL REVIEW.
N	NUMBERS TO THE LEFT OF BORINGS INDICATE SPT VALUE FOR 12 INCHES OF PENETRATION (UNLESS OTHERWISE NOTED).
50/4	NUMBER OF BLOWS FOR 4 INCHES OF PENETRATION
HA	HAND AUGERED TO VERIFY UTILITY CLEARANCE
WH	SPLIT-SPOON SAMPLER ADVANCED UNDER WEIGHT OF ROD AND HAMMER
-200	PERCENT PASSING #200 SIEVE
NMC	NATURAL MOISTURE CONTENT (%)
LL	LIQUID LIMIT (%)
PI	PLASTICITY INDEX (%)
OC	ORGANIC CONTENT (%)
NP	NON-PLASTIC
NAVD 88	NORTH AMERICAN VERTICAL DATUM OF 1988
	APPROXIMATE SPT BORING LOCATION
	GROUNDWATER LEVEL ENCOUNTERED DURING FIELD EXPLORATIONS
100	LOSS OF CIRCULATION OF DRILLING FLUID (%)
	CASING
P	ASPHALT PAVEMENT AND/OR BASE MATERIAL
T	BORINGS PROFILE TRUNCATED FOR CLARITY. FOR FULL BORING PROFILE PLEASE REFER TO THE BRIDGE REPORT OF CORE BORINGS SHEETS.

BOR # WB-412L*
STA. 411+75
REF. ℄ CONST.
OFF. 28' LT
ELEV. 3.7
DATE 11/22/2019
DRILLER I. POORAN
HAMMER AUTOMATIC
RIG D-25

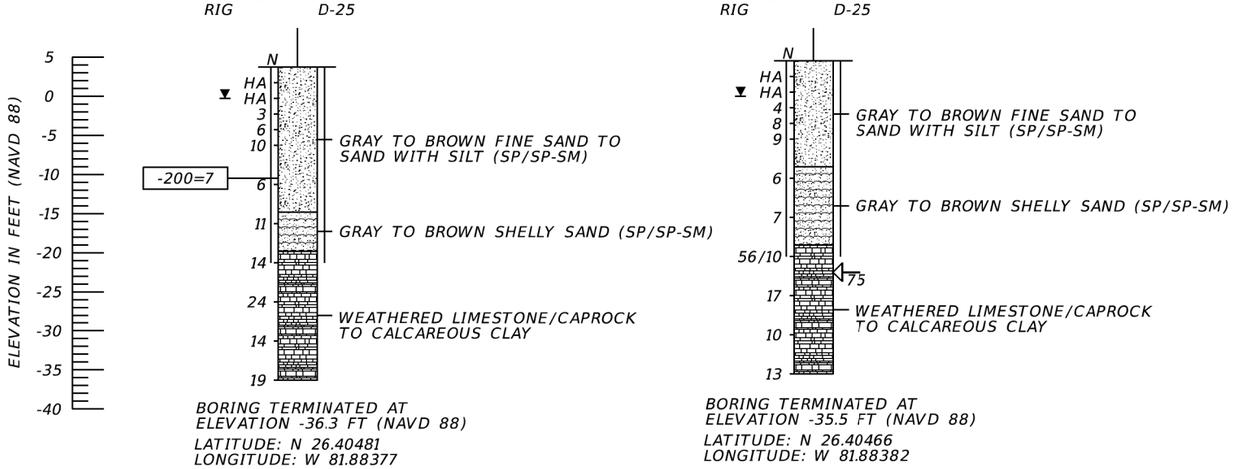

BORING TERMINATED AT ELEVATION -36.3 FT (NAVD 88)
LATITUDE: N 26.40481
LONGITUDE: W 81.88377

BOR # WB-412R*
STA. 411+69
REF. ℄ CONST.
OFF. 26' RT
ELEV. 4.5
DATE 11/24/2019
DRILLER I. POORAN
HAMMER AUTOMATIC
RIG D-25

BORING TERMINATED AT ELEVATION -35.5 FT (NAVD 88)
LATITUDE: N 26.40466
LONGITUDE: W 81.88382

	SAFETY HAMMER	AUTOMATIC HAMMER
GRANULAR MATERIALS- RELATIVE DENSITY	SPT N-VALUE (BLOWS/FT.)	SPT N-VALUE (BLOWS/FT.)
VERY LOOSE	LESS THAN 4	LESS THAN 3
LOOSE	4 to 10	3 to 8
MEDIUM DENSE	10 to 30	8 to 24
DENSE	30 to 50	24 to 40
VERY DENSE	GREATER THAN 50	GREATER THAN 40
SILTS AND CLAYS CONSISTENCY	SPT N-VALUE (BLOWS/FT.)	SPT N-VALUE (BLOWS/FT.)
VERY SOFT	LESS THAN 2	LESS THAN 1
SOFT	2 to 4	1 to 3
FIRM	4 to 8	3 to 6
STIFF	8 to 15	6 to 12
VERY STIFF	15 to 30	12 to 24
HARD	GREATER THAN 30	GREATER THAN 24

MSE WALL NO. 1

REVISIONS

DATE	BY	DESCRIPTION	DATE	BY	DESCRIPTION

ERICK M. FREDERICK, P.E.
P.E. LICENSE NUMBER 63920
TIERRA, INC.
7351 TEMPLE TERRACE HIGHWAY
TAMPA, FLORIDA 33637

DRAWN BY: BJS
CHECKED BY: TM
DESIGNED BY: BJS
CHECKED BY: EMF

LEE COUNTY PUBLIC WORKS
DEPARTMENT OF TRANSPORTATION

ROAD NO.	COUNTY	COUNTY PROJECT No
CR 865	LEE	CN160002

SHEET TITLE: REPORT OF CORE BORINGS (2 OF 7)
REF. DWG. NO.
PROJECT NAME: ESTERO BLVD. (CR 865) OVER BIG CARLOS PASS
SHEET NO. BW - 13

NOTICE: THE OFFICIAL RECORD OF THIS SHEET IS THE ELECTRONIC FILE DIGITALLY SIGNED AND SEALED UNDER RULE 61G15-23.004, F.A.C.

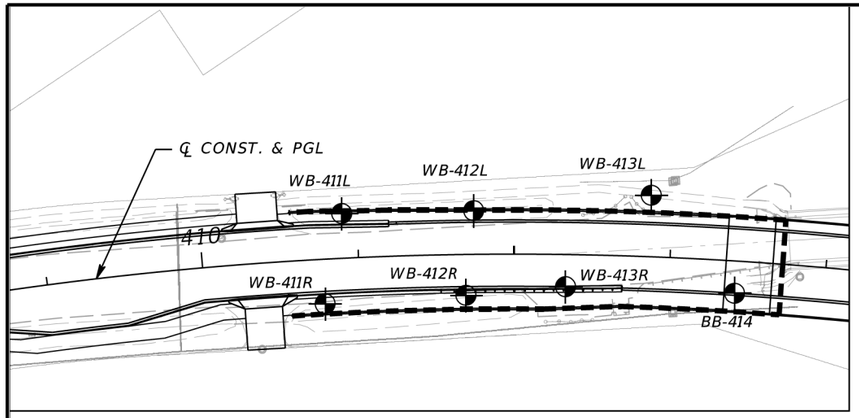

BORING LOCATION PLAN

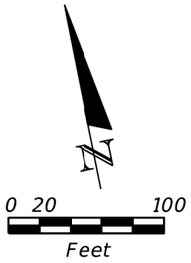

LEGEND

- GRAY TO BROWN FINE SAND TO SAND WITH SILT (SP/SP-SM)
- GRAY TO BROWN SHELLY SAND (SP/SP-SM)
- GRAY TO BROWN SILTY SAND (SM)
- GRAY TO DARK GRAY INDURATED CLAY (CL/CH)
- WEATHERED LIMESTONE/CAPROCK TO CALCAREOUS CLAY
- DARK BROWN ORGANIC SAND TO ORGANIC SILTY SAND TO PEAT (Pt)

RECOMMENDED ENVIRONMENTAL CLASSIFICATION:

SUBSTRUCTURE	CONCRETE: EXTREMELY AGGRESSIVE
SUBSTRUCTURE	STEEL: EXTREMELY AGGRESSIVE
SUPERSTRUCTURE	EXTREMELY AGGRESSIVE

NOTE:

BORING LOCATIONS AND ELEVATIONS DENOTED WITH AN ASTERISK "*" WERE PROVIDED BY THE PROJECT SURVEYOR. ALL OTHER BORING LOCATIONS AND ELEVATIONS WERE DETERMINED USING PROJECT DESIGN FILES PROVIDED BY KISINGER CAMPO AND ASSOCIATES, CORP. IN CONJUNCTION WITH GPS COORDINATES OBTAINED BY TIERRA, INC. IN THE FIELD AND SHOULD BE CONSIDERED APPROXIMATE.

SP	UNIFIED SOIL CLASSIFICATION SYSTEM (ASTM D 2487) GROUP SYMBOL AS DETERMINED BY VISUAL REVIEW AND LABORATORY TESTING ON SELECTED SAMPLES FOR CONFIRMATION OF VISUAL REVIEW.
N	NUMBERS TO THE LEFT OF BORINGS INDICATE SPT VALUE FOR 12 INCHES OF PENETRATION (UNLESS OTHERWISE NOTED).
50/4	NUMBER OF BLOWS FOR 4 INCHES OF PENETRATION
HA	HAND AUGERED TO VERIFY UTILITY CLEARANCE
WH	SPLIT-SPOON SAMPLER ADVANCED UNDER WEIGHT OF ROD AND HAMMER
-200	PERCENT PASSING #200 SIEVE
NMC	NATURAL MOISTURE CONTENT (%)
LL	LIQUID LIMIT (%)
PI	PLASTICITY INDEX (%)
OC	ORGANIC CONTENT (%)
NP	NON-PLASTIC
NAVD 88	NORTH AMERICAN VERTICAL DATUM OF 1988
	APPROXIMATE SPT BORING LOCATION
	GROUNDWATER LEVEL ENCOUNTERED DURING FIELD EXPLORATIONS
100	LOSS OF CIRCULATION OF DRILLING FLUID (%)
| |	CASING
P	ASPHALT PAVEMENT AND/OR BASE MATERIAL
T	BORINGS PROFILE TRUNCATED FOR CLARITY. FOR FULL BORING PROFILE PLEASE REFER TO THE BRIDGE REPORT OF CORE BORINGS SHEETS.

BOR #	WB-413L*
STA.	412+85
REF.	℄ CONST.
OFF.	40' LT
ELEV.	5.5
DATE	11/21/2019
DRILLER	I. POORAN
HAMMER	AUTOMATIC
RIG	D-25

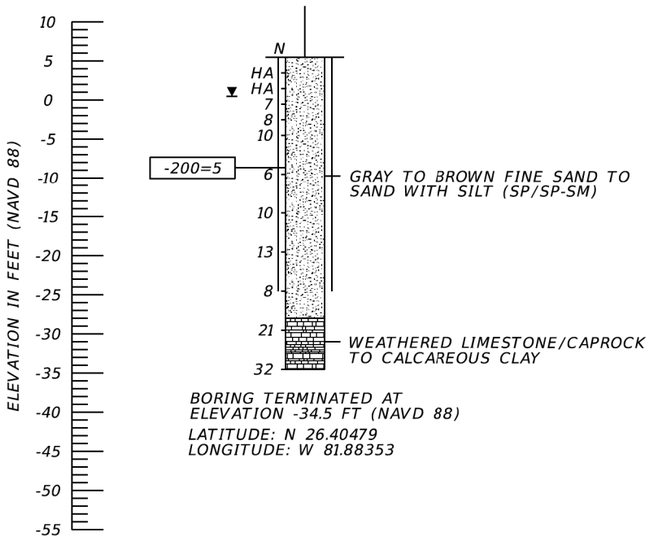

BORING TERMINATED AT ELEVATION -34.5 FT (NAVD 88)
LATITUDE: N 26.40479
LONGITUDE: W 81.88353

BOR #	WB-413R
STA.	412+31
REF.	℄ CONST.
OFF.	19' RT
ELEV.	5.1
DATE	11/24/2019
DRILLER	I. POORAN
HAMMER	AUTOMATIC
RIG	D-25

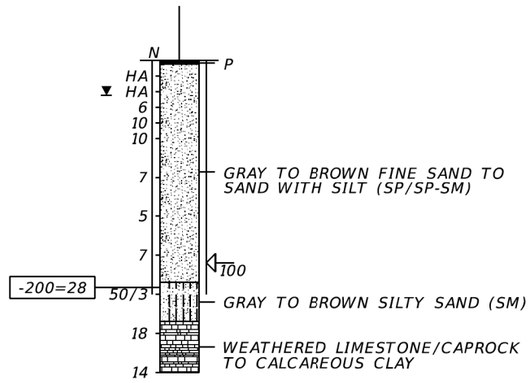

BORING TERMINATED AT ELEVATION -34.9 FT (NAVD 88)
LATITUDE: N 26.40429
LONGITUDE: W 81.88382

BOR #	BB-414
STA.	413+40
REF.	℄ CONST.
OFF.	21' RT.
ELEV.	6.2
DATE	7/21/2019
DRILLER	I. POORAN
HAMMER	AUTOMATIC
RIG	D-25

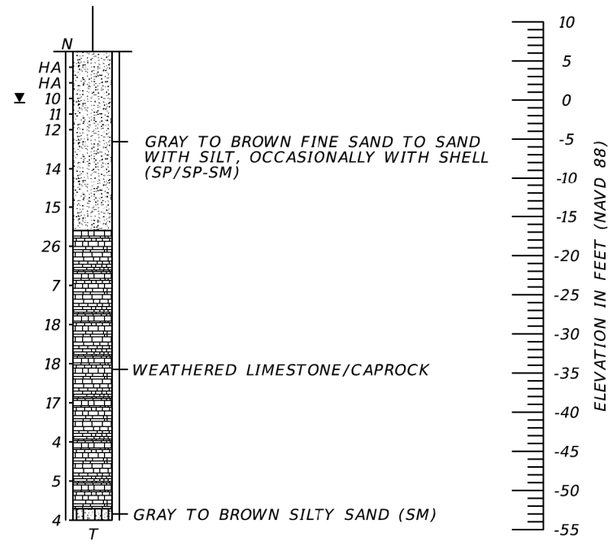

BORING TERMINATED AT ELEVATION -53.8 FT (NAVD 88)
LATITUDE: N 26.40457
LONGITUDE: W 81.88330

	SAFETY HAMMER	AUTOMATIC HAMMER
GRANULAR MATERIALS- RELATIVE DENSITY	SPT N-VALUE (BLOWS/FT.)	SPT N-VALUE (BLOWS/FT.)
VERY LOOSE	LESS THAN 4	LESS THAN 3
LOOSE	4 to 10	3 to 8
MEDIUM DENSE	10 to 30	8 to 24
DENSE	30 to 50	24 to 40
VERY DENSE	GREATER THAN 50	GREATER THAN 40
SILTS AND CLAYS CONSISTENCY	SPT N-VALUE (BLOWS/FT.)	SPT N-VALUE (BLOWS/FT.)
VERY SOFT	LESS THAN 2	LESS THAN 1
SOFT	2 to 4	1 to 3
FIRM	4 to 8	3 to 6
STIFF	8 to 15	6 to 12
VERY STIFF	15 to 30	12 to 24
HARD	GREATER THAN 30	GREATER THAN 24

MSE WALL NO. 1

REVISIONS

DATE	BY	DESCRIPTION	DATE	BY	DESCRIPTION

ERICK M. FREDERICK, P.E.
P.E. LICENSE NUMBER 63920
TIERRA, INC.
7351 TEMPLE TERRACE HIGHWAY
TAMPA, FLORIDA 33637

DRAWN BY: BJS
CHECKED BY: TM
DESIGNED BY: BJS
CHECKED BY: EMF

LEE COUNTY PUBLIC WORKS
DEPARTMENT OF TRANSPORTATION

ROAD NO.	COUNTY	COUNTY PROJECT No
CR 865	LEE	CN160002

SHEET TITLE: REPORT OF CORE BORINGS (3 OF 7)
REF. DWG. NO.
PROJECT NAME: ESTERO BLVD. (CR 865) OVER BIG CARLOS PASS
SHEET NO. BW-14

NOTICE: THE OFFICIAL RECORD OF THIS SHEET IS THE ELECTRONIC FILE DIGITALLY SIGNED AND SEALED UNDER RULE 61G15-23.004, F.A.C.

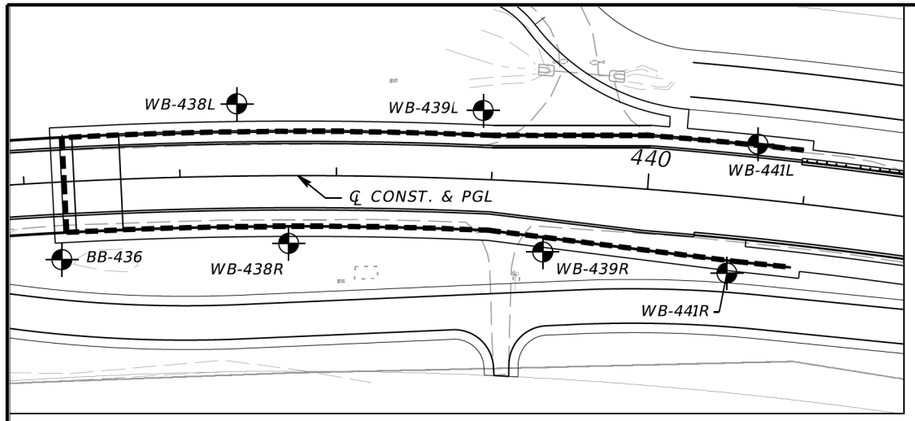

BORING LOCATION PLAN

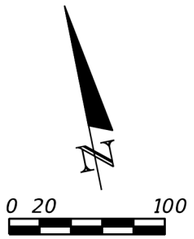

LEGEND

- GRAY TO BROWN FINE SAND TO SAND WITH SILT (SP/SP-SM)
- GRAY TO BROWN SILTY SAND (SM)
- WEATHERED LIMESTONE/CAPROCK TO CALCAREOUS CLAY
- GRAY TO BROWN SHELLY SAND (SP/SP-SM)
- GRAY TO DARK GRAY INDURATED CLAY (CL/CH)
- DARK BROWN ORGANIC SAND TO ORGANIC SILTY SAND TO PEAT (Pt)

RECOMMENDED ENVIRONMENTAL CLASSIFICATION:

SUBSTRUCTURE	CONCRETE: EXTREMELY AGGRESSIVE
SUBSTRUCTURE	STEEL: EXTREMELY AGGRESSIVE
SUPERSTRUCTURE	EXTREMELY AGGRESSIVE

NOTE:

BORING LOCATIONS AND ELEVATIONS DENOTED WITH AN ASTERISK "*" WERE PROVIDED BY THE PROJECT SURVEYOR. ALL OTHER BORING LOCATIONS AND ELEVATIONS WERE DETERMINED USING PROJECT DESIGN FILES PROVIDED BY KISINGER CAMPO AND ASSOCIATES, CORP. IN CONJUNCTION WITH GPS COORDINATES OBTAINED BY TIERRA, INC. IN THE FIELD AND SHOULD BE CONSIDERED APPROXIMATE.

SP	UNIFIED SOIL CLASSIFICATION SYSTEM (ASTM D 2487) GROUP SYMBOL AS DETERMINED BY VISUAL REVIEW AND LABORATORY TESTING ON SELECTED SAMPLES FOR CONFIRMATION OF VISUAL REVIEW.
N	NUMBERS TO THE LEFT OF BORINGS INDICATE SPT VALUE FOR 12 INCHES OF PENETRATION (UNLESS OTHERWISE NOTED).
50/4	NUMBER OF BLOWS FOR 4 INCHES OF PENETRATION
HA	HAND AUGERED TO VERIFY UTILITY CLEARANCE
WH	SPLIT-SPOON SAMPLER ADVANCED UNDER WEIGHT OF ROD AND HAMMER
-200	PERCENT PASSING #200 SIEVE
NMC	NATURAL MOISTURE CONTENT (%)
LL	LIQUID LIMIT (%)
PI	PLASTICITY INDEX (%)
OC	ORGANIC CONTENT (%)
NP	NON-PLASTIC
NAVD 88	NORTH AMERICAN VERTICAL DATUM OF 1988
	APPROXIMATE SPT BORING LOCATION
	GROUNDWATER LEVEL ENCOUNTERED DURING FIELD EXPLORATIONS
100	LOSS OF CIRCULATION OF DRILLING FLUID (%)
	CASING
P	ASPHALT PAVEMENT AND/OR BASE MATERIAL
T	BORINGS PROFILE TRUNCATED FOR CLARITY. FOR FULL BORING PROFILE PLEASE REFER TO THE BRIDGE REPORT OF CORE BORINGS SHEETS.

BOR # BB-436*
STA. 436+19
REF. ℄ CONST.
OFF. 48' RT.
ELEV. 3.9
DATE 12/10/2019
DRILLER D. STAKELIN
HAMMER AUTOMATIC
RIG D-25

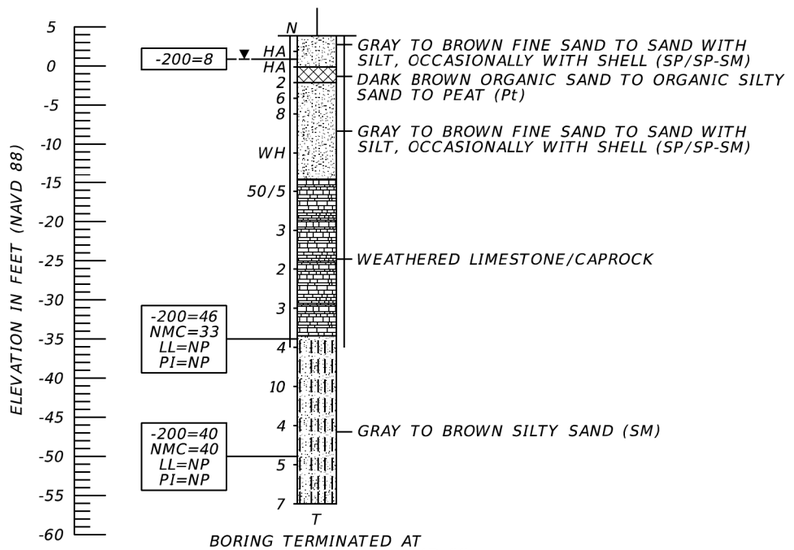

BORING TERMINATED AT
ELEVATION -56.1 FT (NAVD 88)
LATITUDE: N 26.40364
LONGITUDE: W 81.87643

BOR # WB-438L*
STA. 437+37
REF. ℄ CONST.
OFF. 46' LT
ELEV. 2.7
DATE 11/20/2019
DRILLER I. POORAN
HAMMER AUTOMATIC
RIG D-25

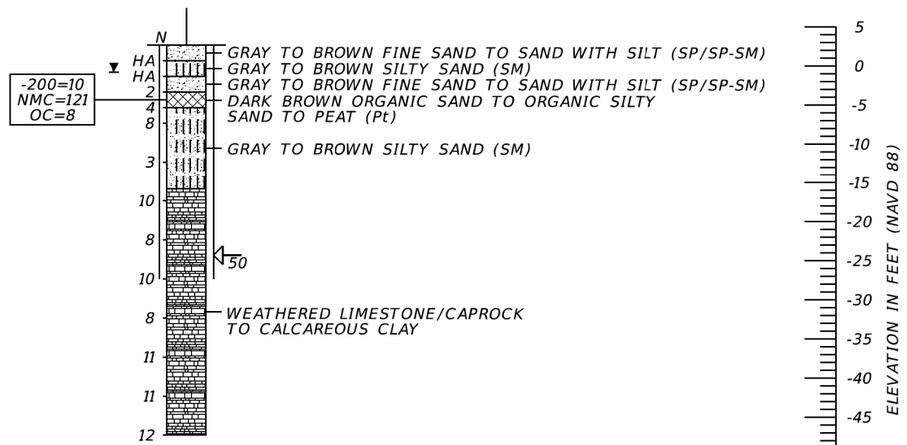

BORING TERMINATED AT
ELEVATION -47.3 FT (NAVD 88)
LATITUDE: N 26.40385
LONGITUDE: W 81.87603

	SAFETY HAMMER	AUTOMATIC HAMMER
GRANULAR MATERIALS- RELATIVE DENSITY	SPT N-VALUE (BLOWS/FT.)	SPT N-VALUE (BLOWS/FT.)
VERY LOOSE	LESS THAN 4	LESS THAN 3
LOOSE	4 to 10	3 to 8
MEDIUM DENSE	10 to 30	8 to 24
DENSE	30 to 50	24 to 40
VERY DENSE	GREATER THAN 50	GREATER THAN 40
SILTS AND CLAYS CONSISTENCY	SPT N-VALUE (BLOWS/FT.)	SPT N-VALUE (BLOWS/FT.)
VERY SOFT	LESS THAN 2	LESS THAN 1
SOFT	2 to 4	1 to 3
FIRM	4 to 8	3 to 6
STIFF	8 to 15	6 to 12
VERY STIFF	15 to 30	12 to 24
HARD	GREATER THAN 30	GREATER THAN 24

MSE WALL NO. 2

NOTICE: THE OFFICIAL RECORD OF THIS SHEET IS THE ELECTRONIC FILE DIGITALLY SIGNED AND SEALED UNDER RULE 61G15-23.004, F.A.C.

REVISIONS

DATE	BY	DESCRIPTION	DATE	BY	DESCRIPTION

ERICK M. FREDERICK, P.E.
P.E. LICENSE NUMBER 63920
TIERRA, INC.
7351 TEMPLE TERRACE HIGHWAY
TAMPA, FLORIDA 33637

DRAWN BY: BJS
CHECKED BY: TM
DESIGNED BY: BJS
CHECKED BY: EMF

LEE COUNTY PUBLIC WORKS
DEPARTMENT OF TRANSPORTATION

ROAD NO.	COUNTY	COUNTY PROJECT No
CR 865	LEE	CN160002

SHEET TITLE: REPORT OF CORE BORINGS (4 OF 7)
REF. DWG. NO.
PROJECT NAME: ESTERO BLVD. (CR 865) OVER BIG CARLOS PASS
SHEET NO. BW - 15

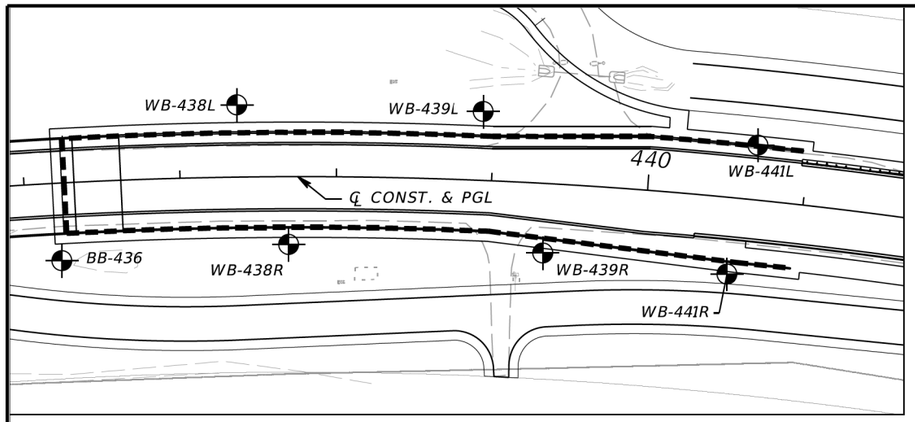

BORING LOCATION PLAN

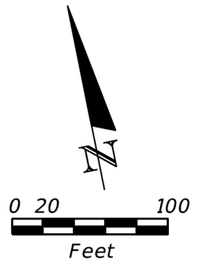

LEGEND

- GRAY TO BROWN FINE SAND TO SAND WITH SILT (SP/SP-SM)
- GRAY TO BROWN SILTY SAND (SM)
- WEATHERED LIMESTONE/CAPROCK TO CALCAREOUS CLAY
- GRAY TO BROWN SHELLY SAND (SP/SP-SM)
- GRAY TO DARK GRAY INDURATED CLAY (CL/CH)
- DARK BROWN ORGANIC SAND TO ORGANIC SILTY SAND TO PEAT (Pt)

RECOMMENDED ENVIRONMENTAL CLASSIFICATION:

SUBSTRUCTURE	CONCRETE: EXTREMELY AGGRESSIVE
SUBSTRUCTURE	STEEL: EXTREMELY AGGRESSIVE
SUPERSTRUCTURE	EXTREMELY AGGRESSIVE

NOTE:

BORING LOCATIONS AND ELEVATIONS DENOTED WITH AN ASTERISK "*" WERE PROVIDED BY THE PROJECT SURVEYOR. ALL OTHER BORING LOCATIONS AND ELEVATIONS WERE DETERMINED USING PROJECT DESIGN FILES PROVIDED BY KISINGER CAMPO AND ASSOCIATES, CORP. IN CONJUNCTION WITH GPS COORDINATES OBTAINED BY TIERRA, INC. IN THE FIELD AND SHOULD BE CONSIDERED APPROXIMATE.

SP	UNIFIED SOIL CLASSIFICATION SYSTEM (ASTM D 2487) GROUP SYMBOL AS DETERMINED BY VISUAL REVIEW AND LABORATORY TESTING ON SELECTED SAMPLES FOR CONFIRMATION OF VISUAL REVIEW.
N	NUMBERS TO THE LEFT OF BORINGS INDICATE SPT VALUE FOR 12 INCHES OF PENETRATION (UNLESS OTHERWISE NOTED).
50/4	NUMBER OF BLOWS FOR 4 INCHES OF PENETRATION
HA	HAND AUGERED TO VERIFY UTILITY CLEARANCE
WH	SPLIT-SPOON SAMPLER ADVANCED UNDER WEIGHT OF ROD AND HAMMER
-200	PERCENT PASSING #200 SIEVE
NMC	NATURAL MOISTURE CONTENT (%)
LL	LIQUID LIMIT (%)
PI	PLASTICITY INDEX (%)
OC	ORGANIC CONTENT (%)
NP	NON-PLASTIC
NAVD 88	NORTH AMERICAN VERTICAL DATUM OF 1988
	APPROXIMATE SPT BORING LOCATION
	GROUNDWATER LEVEL ENCOUNTERED DURING FIELD EXPLORATIONS
100	LOSS OF CIRCULATION OF DRILLING FLUID (%)
| |	CASING
P	ASPHALT PAVEMENT AND/OR BASE MATERIAL
T	BORINGS PROFILE TRUNCATED FOR CLARITY. FOR FULL BORING PROFILE PLEASE REFER TO THE BRIDGE REPORT OF CORE BORINGS SHEETS.

BOR # WB-438R*
STA. 437+72
REF. ℄ CONST.
OFF. 40' RT
ELEV. 3.5
DATE 11/22/2019
DRILLER D. STAKELIN
HAMMER AUTOMATIC
RIG CME 55

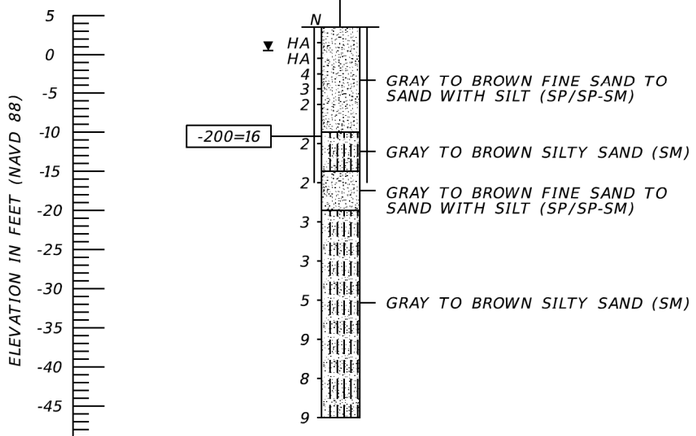

BORING TERMINATED AT ELEVATION -46.5 FT (NAVD 88)
LATITUDE: N 26.40360
LONGITUDE: W 81.87598

BOR # WB-439L*
STA. 438+93
REF. ℄ CONST.
OFF. 44' LT
ELEV. 3.6
DATE 11/19/2019
DRILLER I. POORAN
HAMMER AUTOMATIC
RIG D-25

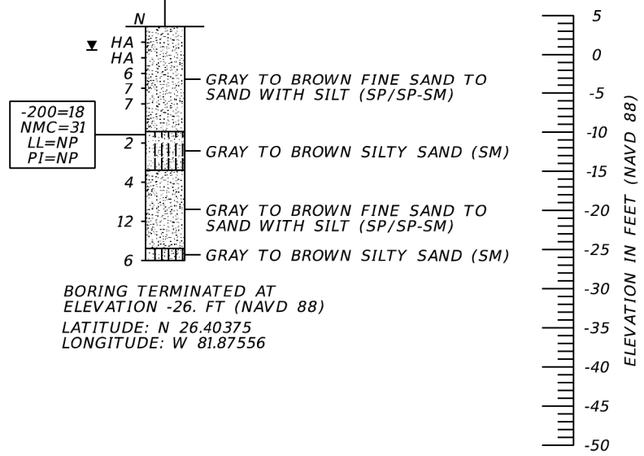

BORING TERMINATED AT ELEVATION -26. FT (NAVD 88)
LATITUDE: N 26.40375
LONGITUDE: W 81.87556

	SAFETY HAMMER	AUTOMATIC HAMMER
GRANULAR MATERIALS- RELATIVE DENSITY	SPT N-VALUE (BLOWS/FT.)	SPT N-VALUE (BLOWS/FT.)
VERY LOOSE	LESS THAN 4	LESS THAN 3
LOOSE	4 to 10	3 to 8
MEDIUM DENSE	10 to 30	8 to 24
DENSE	30 to 50	24 to 40
VERY DENSE	GREATER THAN 50	GREATER THAN 40
SILTS AND CLAYS CONSISTENCY	SPT N-VALUE (BLOWS/FT.)	SPT N-VALUE (BLOWS/FT.)
VERY SOFT	LESS THAN 2	LESS THAN 1
SOFT	2 to 4	1 to 3
FIRM	4 to 8	3 to 6
STIFF	8 to 15	6 to 12
VERY STIFF	15 to 30	12 to 24
HARD	GREATER THAN 30	GREATER THAN 24

MSE WALL NO. 2

NOTICE: THE OFFICIAL RECORD OF THIS SHEET IS THE ELECTRONIC FILE DIGITALLY SIGNED AND SEALED UNDER RULE 61G15-23.004, F.A.C.

REVISIONS

DATE	BY	DESCRIPTION	DATE	BY	DESCRIPTION

ERICK M. FREDERICK, P.E.
P.E. LICENSE NUMBER 63920
TIERRA, INC.
7351 TEMPLE TERRACE HIGHWAY
TAMPA, FLORIDA 33637

DRAWN BY: BJS
CHECKED BY: TM
DESIGNED BY: BJS
CHECKED BY: EMF

LEE COUNTY PUBLIC WORKS
DEPARTMENT OF TRANSPORTATION

ROAD NO.	COUNTY	COUNTY PROJECT No
CR 865	LEE	CN160002

SHEET TITLE: REPORT OF CORE BORINGS (5 OF 7)
REF. DWG. NO.
PROJECT NAME: ESTERO BLVD. (CR 865) OVER BIG CARLOS PASS
SHEET NO. BW-16

jhanna 2/24/2022 3:25:09 PM c:\pwworkingdir\kca-pw.bentley.com_kca-pw-01\josh hanna\dms00783\WB1Boring05.dgn

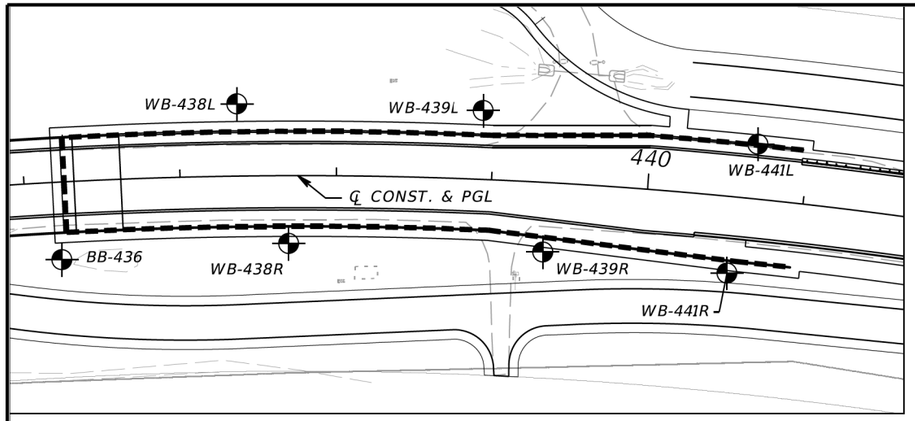

BORING LOCATION PLAN

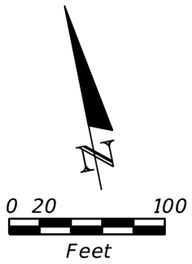

LEGEND

- GRAY TO BROWN FINE SAND TO SAND WITH SILT (SP/SP-SM)
- GRAY TO BROWN SILTY SAND (SM)
- WEATHERED LIMESTONE/CAPROCK TO CALCAREOUS CLAY
- GRAY TO BROWN SHELLY SAND (SP/SP-SM)
- GRAY TO DARK GRAY INDURATED CLAY (CL/CH)
- DARK BROWN ORGANIC SAND TO ORGANIC SILTY SAND TO PEAT (Pt)

RECOMMENDED ENVIRONMENTAL CLASSIFICATION:

SUBSTRUCTURE	CONCRETE: EXTREMELY AGGRESSIVE
SUBSTRUCTURE	STEEL: EXTREMELY AGGRESSIVE
SUPERSTRUCTURE	EXTREMELY AGGRESSIVE

NOTE:

BORING LOCATIONS AND ELEVATIONS DENOTED WITH AN ASTERISK "*" WERE PROVIDED BY THE PROJECT SURVEYOR. ALL OTHER BORING LOCATIONS AND ELEVATIONS WERE DETERMINED USING PROJECT DESIGN FILES PROVIDED BY KISINGER CAMPO AND ASSOCIATES, CORP. IN CONJUNCTION WITH GPS COORDINATES OBTAINED BY TIERRA, INC. IN THE FIELD AND SHOULD BE CONSIDERED APPROXIMATE.

SP	UNIFIED SOIL CLASSIFICATION SYSTEM (ASTM D 2487) GROUP SYMBOL AS DETERMINED BY VISUAL REVIEW AND LABORATORY TESTING ON SELECTED SAMPLES FOR CONFIRMATION OF VISUAL REVIEW.
N	NUMBERS TO THE LEFT OF BORINGS INDICATE SPT VALUE FOR 12 INCHES OF PENETRATION (UNLESS OTHERWISE NOTED).
50/4	NUMBER OF BLOWS FOR 4 INCHES OF PENETRATION
HA	HAND AUGERED TO VERIFY UTILITY CLEARANCE
WH	SPLIT-SPOON SAMPLER ADVANCED UNDER WEIGHT OF ROD AND HAMMER
-200	PERCENT PASSING #200 SIEVE
NMC	NATURAL MOISTURE CONTENT (%)
LL	LIQUID LIMIT (%)
PI	PLASTICITY INDEX (%)
OC	ORGANIC CONTENT (%)
NP	NON-PLASTIC
NAVD 88	NORTH AMERICAN VERTICAL DATUM OF 1988
	APPROXIMATE SPT BORING LOCATION
	GROUNDWATER LEVEL ENCOUNTERED DURING FIELD EXPLORATIONS
100	LOSS OF CIRCULATION OF DRILLING FLUID (%)
	CASING
P	ASPHALT PAVEMENT AND/OR BASE MATERIAL
T	BORINGS PROFILE TRUNCATED FOR CLARITY. FOR FULL BORING PROFILE PLEASE REFER TO THE BRIDGE REPORT OF CORE BORINGS SHEETS.

BOR # WB-439R*
STA. 439+35
REF. ℄ CONST.
OFF. 44' RT
ELEV. 3.6
DATE 11/22/2019
DRILLER D. STAKELIN
HAMMER AUTOMATIC
RIG CME 55

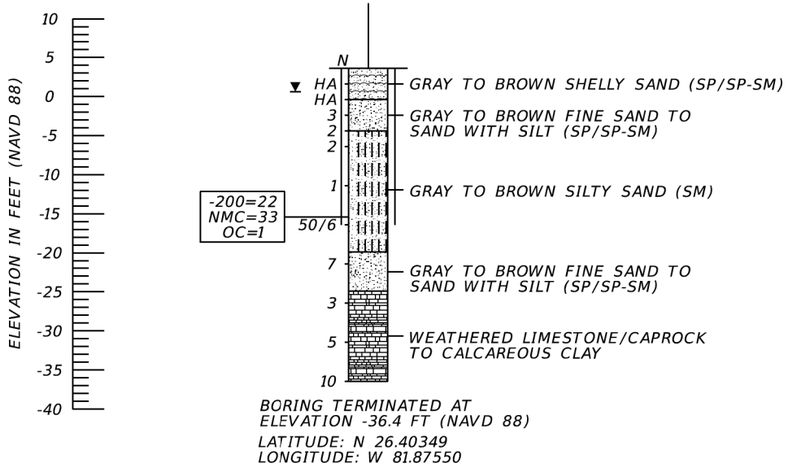

BORING TERMINATED AT
ELEVATION -36.4 FT (NAVD 88)
LATITUDE: N 26.40349
LONGITUDE: W 81.87550

BOR # WB-441L*
STA. 440+67
REF. ℄ CONST.
OFF. 35' LT
ELEV. 6.0
DATE 11/19/2019
DRILLER I. POORAN
HAMMER AUTOMATIC
RIG D-25

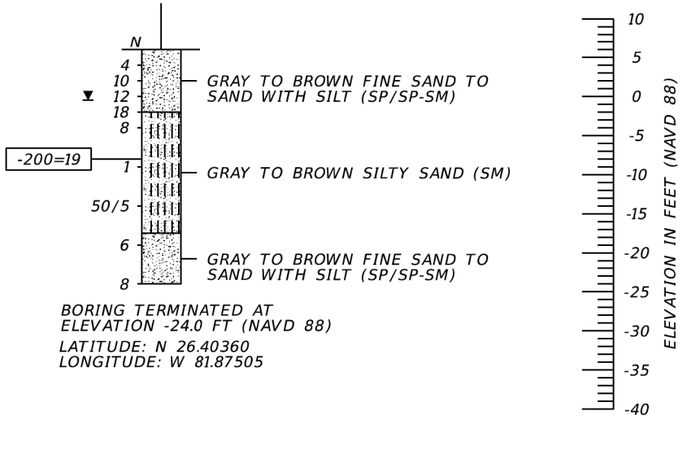

BORING TERMINATED AT
ELEVATION -24.0 FT (NAVD 88)
LATITUDE: N 26.40360
LONGITUDE: W 81.87505

	SAFETY HAMMER	AUTOMATIC HAMMER
GRANULAR MATERIALS- RELATIVE DENSITY	SPT N-VALUE (BLOWS/FT.)	SPT N-VALUE (BLOWS/FT.)
VERY LOOSE	LESS THAN 4	LESS THAN 3
LOOSE	4 to 10	3 to 8
MEDIUM DENSE	10 to 30	8 to 24
DENSE	30 to 50	24 to 40
VERY DENSE	GREATER THAN 50	GREATER THAN 40
SILTS AND CLAYS CONSISTENCY	SPT N-VALUE (BLOWS/FT.)	SPT N-VALUE (BLOWS/FT.)
VERY SOFT	LESS THAN 2	LESS THAN 1
SOFT	2 to 4	1 to 3
FIRM	4 to 8	3 to 6
STIFF	8 to 15	6 to 12
VERY STIFF	15 to 30	12 to 24
HARD	GREATER THAN 30	GREATER THAN 24

MSE WALL NO. 2

REVISIONS

DATE	BY	DESCRIPTION	DATE	BY	DESCRIPTION

ERICK M. FREDERICK, P.E.
P.E. LICENSE NUMBER 63920
TIERRA, INC.
7351 TEMPLE TERRACE HIGHWAY
TAMPA, FLORIDA 33637

DRAWN BY: BJS
CHECKED BY: TM
DESIGNED BY: BJS
CHECKED BY: EMF

LEE COUNTY PUBLIC WORKS
DEPARTMENT OF TRANSPORTATION

ROAD NO.	COUNTY	COUNTY PROJECT No
CR 865	LEE	CN160002

SHEET TITLE: REPORT OF CORE BORINGS (6 OF 7)
REF. DWG. NO.
PROJECT NAME: ESTERO BLVD. (CR 865) OVER BIG CARLOS PASS
SHEET NO. BW - 17

NOTICE: THE OFFICIAL RECORD OF THIS SHEET IS THE ELECTRONIC FILE DIGITALLY SIGNED AND SEALED UNDER RULE 61G15-23.004, F.A.C.

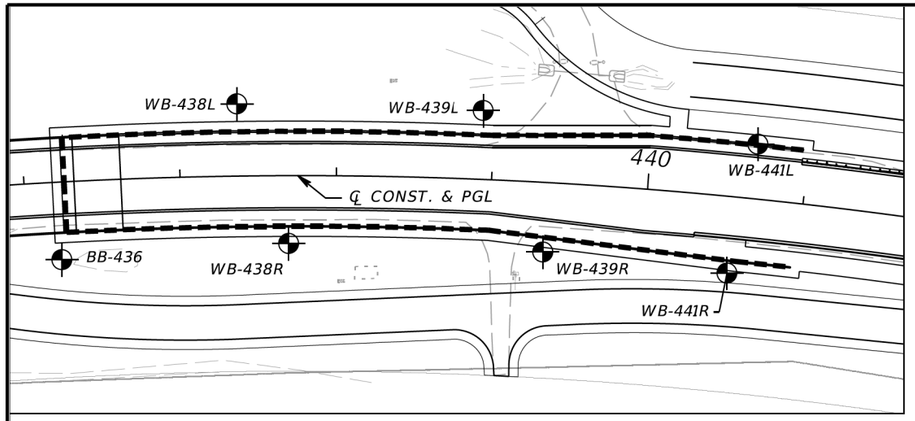

BORING LOCATION PLAN

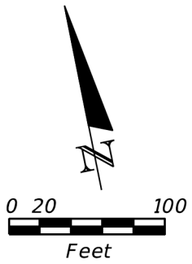

LEGEND

- GRAY TO BROWN FINE SAND TO SAND WITH SILT (SP/SP-SM)
- GRAY TO BROWN SILTY SAND (SM)
- WEATHERED LIMESTONE/CAPROCK TO CALCAREOUS CLAY
- GRAY TO BROWN SHELLY SAND (SP/SP-SM)
- GRAY TO DARK GRAY INDURATED CLAY (CL/CH)
- DARK BROWN ORGANIC SAND TO ORGANIC SILTY SAND TO PEAT (Pt)

RECOMMENDED ENVIRONMENTAL CLASSIFICATION:

SUBSTRUCTURE	CONCRETE: EXTREMELY AGGRESSIVE
SUBSTRUCTURE	STEEL: EXTREMELY AGGRESSIVE
SUPERSTRUCTURE	EXTREMELY AGGRESSIVE

NOTE:

BORING LOCATIONS AND ELEVATIONS DENOTED WITH AN ASTERISK "*" WERE PROVIDED BY THE PROJECT SURVEYOR. ALL OTHER BORING LOCATIONS AND ELEVATIONS WERE DETERMINED USING PROJECT DESIGN FILES PROVIDED BY KISINGER CAMPO AND ASSOCIATES, CORP. IN CONJUNCTION WITH GPS COORDINATES OBTAINED BY TIERRA, INC. IN THE FIELD AND SHOULD BE CONSIDERED APPROXIMATE.

SP	UNIFIED SOIL CLASSIFICATION SYSTEM (ASTM D 2487) GROUP SYMBOL AS DETERMINED BY VISUAL REVIEW AND LABORATORY TESTING ON SELECTED SAMPLES FOR CONFIRMATION OF VISUAL REVIEW.
N	NUMBERS TO THE LEFT OF BORINGS INDICATE SPT VALUE FOR 12 INCHES OF PENETRATION (UNLESS OTHERWISE NOTED).
50/4	NUMBER OF BLOWS FOR 4 INCHES OF PENETRATION
HA	HAND AUGERED TO VERIFY UTILITY CLEARANCE
WH	SPLIT-SPOON SAMPLER ADVANCED UNDER WEIGHT OF ROD AND HAMMER
-200	PERCENT PASSING #200 SIEVE
NMC	NATURAL MOISTURE CONTENT (%)
LL	LIQUID LIMIT (%)
PI	PLASTICITY INDEX (%)
OC	ORGANIC CONTENT (%)
NP	NON-PLASTIC
NAVD 88	NORTH AMERICAN VERTICAL DATUM OF 1988
	APPROXIMATE SPT BORING LOCATION
	GROUNDWATER LEVEL ENCOUNTERED DURING FIELD EXPLORATIONS
100	LOSS OF CIRCULATION OF DRILLING FLUID (%)
	CASING
P	ASPHALT PAVEMENT AND/OR BASE MATERIAL
T	BORINGS PROFILE TRUNCATED FOR CLARITY. FOR FULL BORING PROFILE PLEASE REFER TO THE BRIDGE REPORT OF CORE BORINGS SHEETS.

BOR # WB-441R*
STA. 440+56
REF. ℄ CONST.
OFF. 49' RT
ELEV. 2.5
DATE 11/20/2019
DRILLER I. POORAN
HAMMER AUTOMATIC
RIG D-25

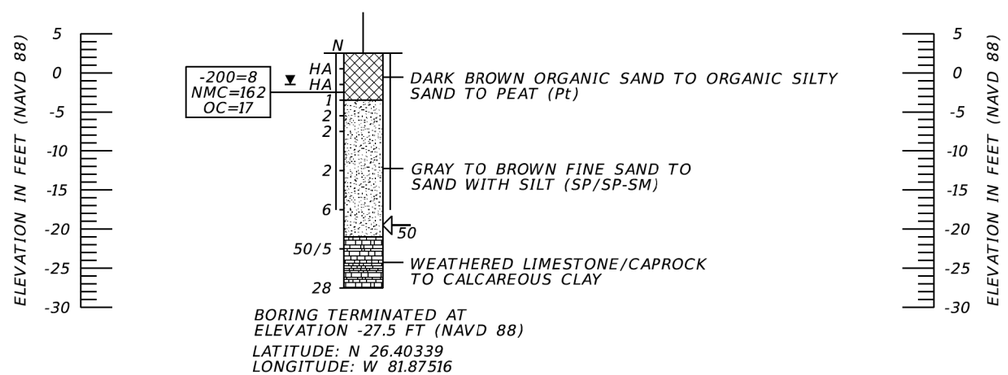

BORING TERMINATED AT ELEVATION -27.5 FT (NAVD 88)
LATITUDE: N 26.40339
LONGITUDE: W 81.87516

	SAFETY HAMMER	AUTOMATIC HAMMER
GRANULAR MATERIALS- RELATIVE DENSITY	SPT N-VALUE (BLOWS/FT.)	SPT N-VALUE (BLOWS/FT.)
VERY LOOSE	LESS THAN 4	LESS THAN 3
LOOSE	4 to 10	3 to 8
MEDIUM DENSE	10 to 30	8 to 24
DENSE	30 to 50	24 to 40
VERY DENSE	GREATER THAN 50	GREATER THAN 40
SILTS AND CLAYS CONSISTENCY	SPT N-VALUE (BLOWS/FT.)	SPT N-VALUE (BLOWS/FT.)
VERY SOFT	LESS THAN 2	LESS THAN 1
SOFT	2 to 4	1 to 3
FIRM	4 to 8	3 to 6
STIFF	8 to 15	6 to 12
VERY STIFF	15 to 30	12 to 24
HARD	GREATER THAN 30	GREATER THAN 24

MSE WALL NO. 2

REVISIONS

DATE	BY	DESCRIPTION	DATE	BY	DESCRIPTION

ERICK M. FREDERICK, P.E.
P.E. LICENSE NUMBER 63920
TIERRA, INC.
7351 TEMPLE TERRACE HIGHWAY
TAMPA, FLORIDA 33637

DRAWN BY: BJS
CHECKED BY: TM
DESIGNED BY: BJS
CHECKED BY: EMF

LEE COUNTY PUBLIC WORKS
DEPARTMENT OF TRANSPORTATION

ROAD NO.	COUNTY	COUNTY PROJECT No
CR 865	LEE	CN160002

SHEET TITLE: REPORT OF CORE BORINGS (7 OF 7)
REF. DWG. NO.
PROJECT NAME: ESTERO BLVD. (CR 865) OVER BIG CARLOS PASS
SHEET NO. BW - 18

NOTICE: THE OFFICIAL RECORD OF THIS SHEET IS THE ELECTRONIC FILE DIGITALLY SIGNED AND SEALED UNDER RULE 61G15-23.004, F.A.C.

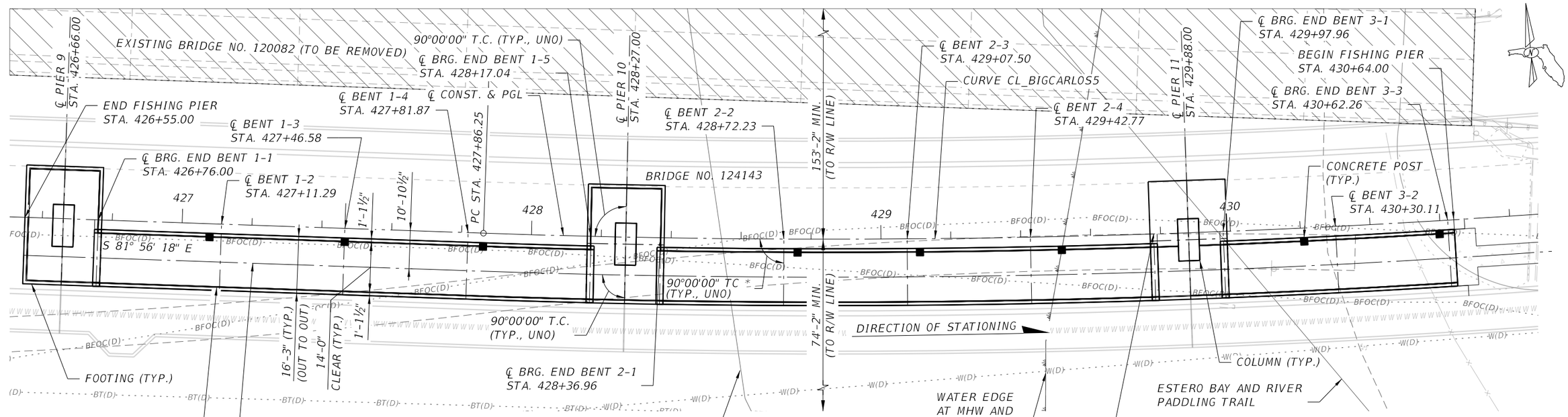

PLAN

CURVE BIGCARLOS5
P.I. STATION 429+93.05
DELTA = 8° 15' 25" (LT)
DEGREE = 1° 59' 59"
TANGENT = 206.79'
LENGTH = 412.87'
RADIUS = 2,865.00'
P.C. STATION 427+86.25
P.R.C. STATION 431+99.13
e = NC

* ℄ BEARING FOR END BENTS 1-1, 1-5, 2-1, 2-5 AND 3-1 ARE ALIGNED PARALLEL TO THE FACE OF THE RESPECTIVE BRIDGE PIERS.

NOTES:
1. ALL DIMENSION ARE MEASURED ALONG ℄ CONSTRUCTION & PGL.
2. FOR CONCRETE POST LOCATIONS SEE POST DETAILS SHEET B2-16.
3. FOR PROFILE GRADE AND TYPICAL SECTION SEE SHEET B2-11.

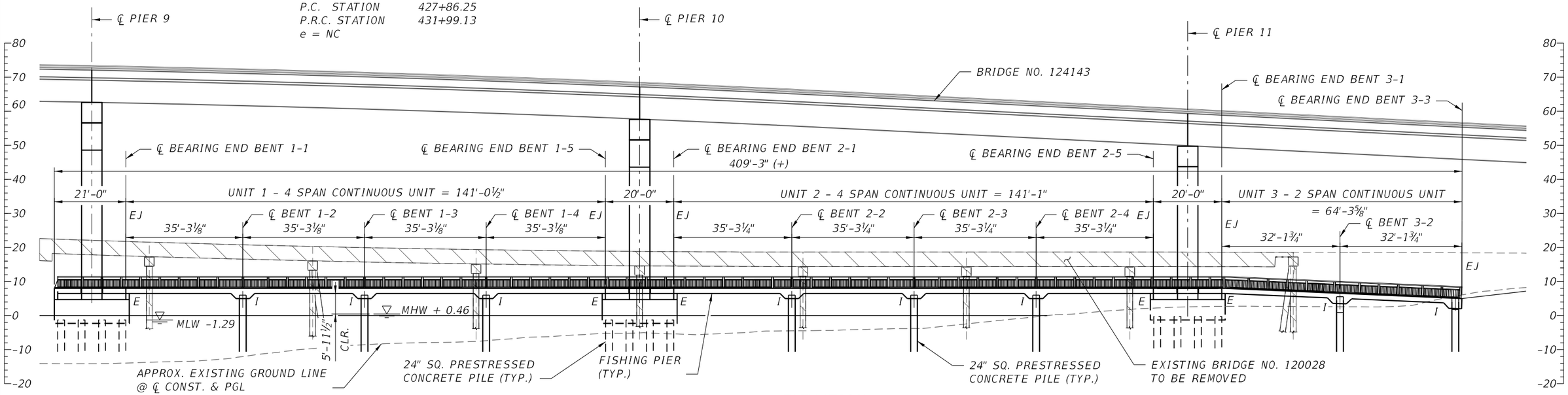

ELEVATION

BRIDGE NO. 124143

NOTICE: THE OFFICIAL RECORD OF THIS SHEET IS THE ELECTRONIC FILE DIGITALLY SIGNED AND SEALED UNDER RULE 61G15-23.004, F.A.C.

REVISIONS					
DATE	BY	DESCRIPTION	DATE	BY	DESCRIPTION

Kisinger Campo & Associates Corp.
201 N. Franklin Street
Suite 400
Tampa, FL 33602
Alfredo Jose Layrisse, PE No. 75610

DRAWN BY:	CHECKED BY:	DESIGNED BY:	CHECKED BY:
ARF 06-19	JHJ 04-21	CEL 06-19	AJL 06-19

LEE COUNTY PUBLIC WORKS
DEPARTMENT OF TRANSPORTATION

ROAD NO.	COUNTY	COUNTY PROJECT No
CR 865	LEE	CN160002

SHEET TITLE: FISHING PIER PLAN AND ELEVATION

REF. DWG. NO.:

PROJECT NAME: ESTERO BLVD. (CR 865) OVER BIG CARLOS PASS

SHEET NO.: B2-1

jhanna 2/24/2022 3:25:49 PM c:\pwworkingdir\kca-pw.bentley.com_kca-pw-01\josh hanna\dms00783\B1PlanElevFishingPier

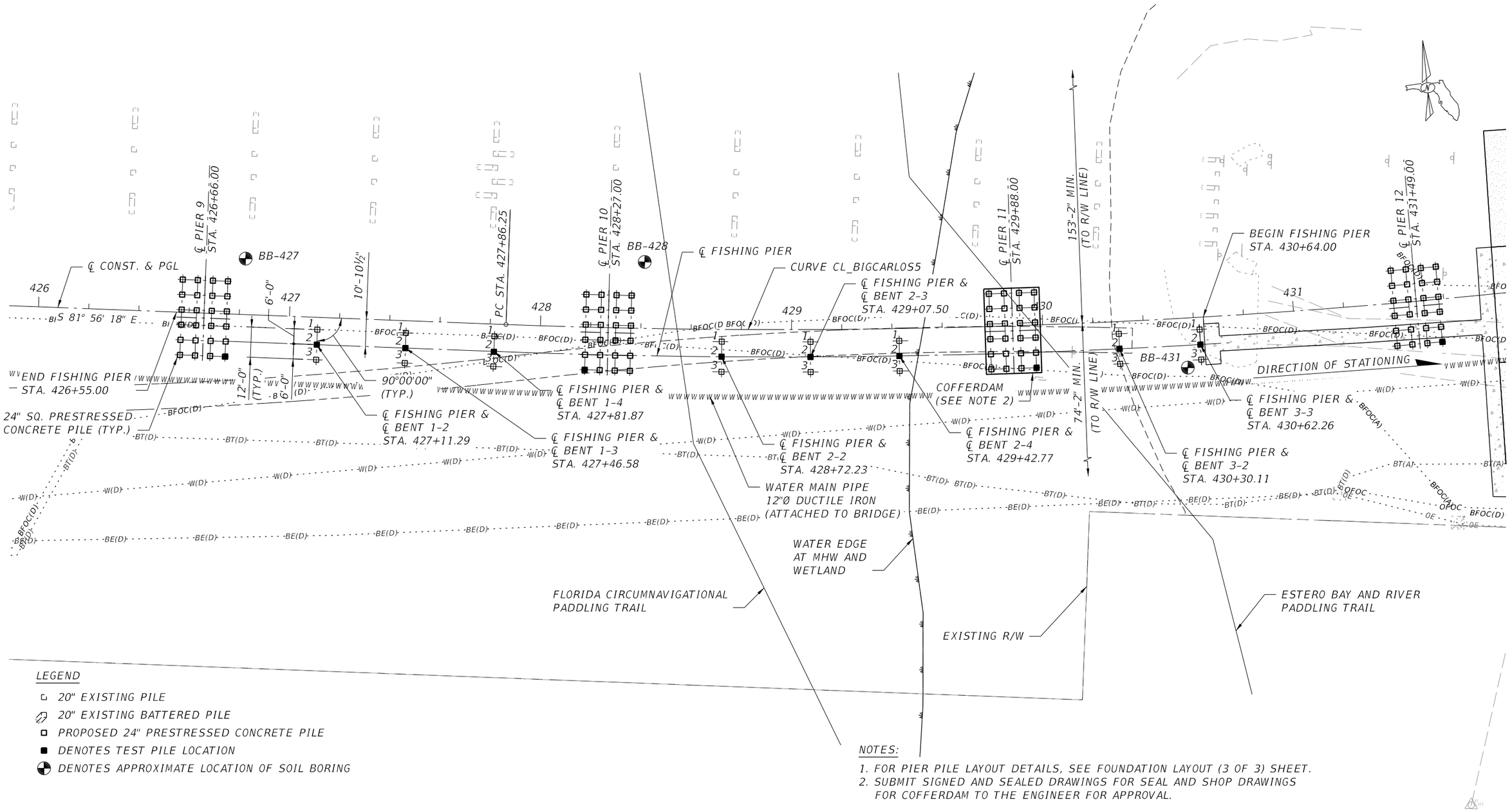

LEGEND

- 20" EXISTING PILE
- 20" EXISTING BATTERED PILE
- PROPOSED 24" PRESTRESSED CONCRETE PILE
- DENOTES TEST PILE LOCATION
- DENOTES APPROXIMATE LOCATION OF SOIL BORING

NOTES:

1. FOR PIER PILE LAYOUT DETAILS, SEE FOUNDATION LAYOUT (3 OF 3) SHEET.
2. SUBMIT SIGNED AND SEALED DRAWINGS FOR SEAL AND SHOP DRAWINGS FOR COFFERDAM TO THE ENGINEER FOR APPROVAL.

PLAN

BRIDGE NO. 124143

NOTICE: THE OFFICIAL RECORD OF THIS SHEET IS THE ELECTRONIC FILE DIGITALLY SIGNED AND SEALED UNDER RULE 61G15-23.004, F.A.C.

REVISIONS

DATE	BY	DESCRIPTION	DATE	BY	DESCRIPTION

Kisinger Campo & Associates Corp.
201 N. Franklin Street
Suite 400
Tampa, FL 33602
Alfredo Jose Layrisse, PE No. 75610

DRAWN BY:	JBH 04-21
CHECKED BY:	JHJ 04-21
DESIGNED BY:	TGL 12-19
CHECKED BY:	JHJ 04-21

LEE COUNTY PUBLIC WORKS
DEPARTMENT OF TRANSPORTATION

ROAD NO.	COUNTY	COUNTY PROJECT No
CR 865	LEE	CN160002

SHEET TITLE: FISHING PIER FOUNDATION LAYOUT

REF. DWG. NO.:

PROJECT NAME: ESTERO BLVD. (CR 865) OVER BIG CARLOS PASS

SHEET NO.: B2-2

jhanna 2/24/2022 3:25:52 PM c:\pwworkingdir\kca-pw.bentley.com_kca-pw-01\josh hanna\dms00783\B1FoundLayFishingPier

PILE DATA TABLE

INSTALLATION CRITERIA									DESIGN CRITERIA								
PIER or BENT NUMBER	PILE SIZE (in.)	NOMINAL BEARING RESISTANCE (tons)	NOMINAL UPLIFT RESISTANCE (tons)	MINIMUM TIP ELEVATION (ft.)	TEST PILE LENGTH (ft.)	REQUIRED JET ELEVATION (ft.)	REQUIRED PREFORM ELEVATION (ft.)	MINIMUM PILE SPLICE ELEVATION (ft.) (SEE NOTE)	FACTORED DESIGN LOAD (tons)	FACTORED DESIGN UPLIFT LOAD (tons)	DOWN DRAG (tons)	TOTAL SCOUR RESISTANCE (tons)	NET SCOUR RESISTANCE (tons)	100-YEAR SCOUR ELEVATION (ft.)	Ø COMPRESSION	Ø UPLIFT	PILE CUT-OFF ELEVATIONS
BENT 1-2	24	80	204	-123	175	N/A	-48	-90.5	52	112	N/A	24	0	-27	0.65	0.55	5.915
BENT 1-3	24	70	217	-126	175	N/A	-48	-90.5	45	119	N/A	68	0	-27	0.65	0.55	5.915
BENT 1-4	24	80	208	-113	160	N/A	-43	-81.0	52	114	N/A	68	0	-27	0.65	0.55	5.915
BENT 2-2	24	80	208	-114	160	N/A	-43	-82.5	52	114	N/A	68	0	-27	0.65	0.55	5.915
BENT 2-3	24	70	224	-115	165	N/A	-43	-82.5	45	123	N/A	33	0	-22	0.65	0.55	5.915
BENT 2-4	24	80	215	-98	165	N/A	-63	-84.5	52	118	N/A	55	0	-25	0.65	0.55	5.915
BENT 3-2	24	85	100	-86	110	N/A	-63	-50.0	55	55	N/A	28	0	-25	0.65	0.55	4.600
BENT 3-3	24	31	51	-79	100	N/A	-63	-42.0	20	28	N/A	28	0	-25	0.65	0.55	3.000

$$\frac{\text{Factored Design Load} + \text{Net Scour Resistance} + \text{Down Drag}}{\text{Ø}} \leq \text{Nominal Bearing Resistance}$$

UPLIFT RESISTANCE – The ultimate side friction capacity that must be obtained below the 100 year scour elevation to resist pullout of the pile (Specify only when design requires uplift capacity).

TOTAL SCOUR RESISTANCE – An estimate of the ultimate static side friction resistance provided by the scourable soil.

NET SCOUR RESISTANCE – An estimate of the ultimate static side friction resistance provided by the soil from the required preformed or jetting elevation to the scour elevation.

100-YEAR SCOUR ELEVATION – Estimated elevation of scour due to the 100 year storm event.

The contractor should anticipate the use of specialized equipment and/or methods including, but not limited to, core barrels, rock augers, punches, drill bits, etc. to complete preforming. If drilling equipment with a tapered end is used to construct the preformed pile holes, the maximum diameter of the drilling equipment has to reach the required preformed elevation.

Do not advance preformed pile holes deeper than the preformed elevations shown in the table without approval of the engineer. If actual preforming elevations differ from those shown in the table, the engineer shall determine the required driving resistance.

NOTE:

WHEN REQUIRED, SPLICE LOCATION TO BE POSITIONED BELOW DENOTED ELEVATION.

PILE INSTALLATION NOTES:

Contractor to verify location of all utilities prior to any pile installation activities.

Minimum Tip Elevation at Bent Nos. 3-2 and 3-3 is required for lateral stability. Minimum Tip Elevation at Bent Nos. 1-2, 1-3, 1-4, 2-2, 2-3 and 2-4 are required for Uplift Resistance.

When a required jetting elevation is shown, the jet shall be lowered to the elevation and continue to operate at this elevation until the pile driving is completed. If jetting or preforming elevations differ from those shown on the table, the Engineer shall be responsible for determination of the required driving resistance.

No jetting will be allowed without the approval of the Engineer.

The Contractor should not anticipate being allowed to jet piles below the 100-year scour elevation or required jet elevation, whichever is deeper.

For pile groups, pile driving is to commence at the center of the group and proceed outward.

Fullfill requirements of Section 455-7.5 for pre-planned splices.

BRIDGE NO. 124143

NOTICE: THE OFFICIAL RECORD OF THIS SHEET IS THE ELECTRONIC FILE DIGITALLY SIGNED AND SEALED UNDER RULE 61G15-23.004, F.A.C.

REVISIONS

DATE	BY	DESCRIPTION	DATE	BY	DESCRIPTION

Kisinger Campo & Associates Corp.
201 N. Franklin Street
Suite 400
Tampa, FL 33602
Alfredo Jose Layrisse, PE No. 75610

DRAWN BY: JHJ 12-21
CHECKED BY: DAA 04-21
DESIGNED BY: JHJ 12-21
CHECKED BY: UYC 12-21

LEE COUNTY PUBLIC WORKS
DEPARTMENT OF TRANSPORTATION

ROAD NO.	COUNTY	COUNTY PROJECT No
CR 865	LEE	CN160002

SHEET TITLE: FISHING PIER PILE DATA TABLE

REF. DWG. NO.:

PROJECT NAME: ESTERO BLVD. (CR 865) OVER BIG CARLOS PASS

SHEET NO.: B2-3

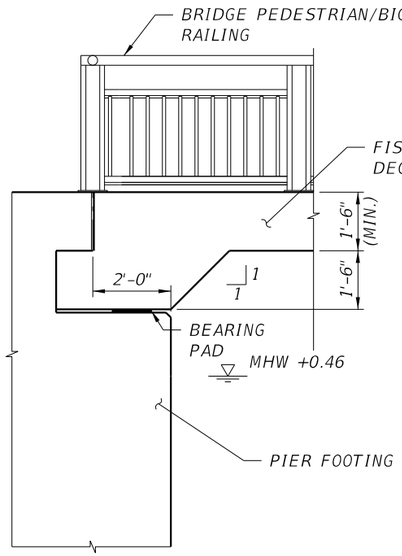

END BENT AT BRIDGE FOUNDATIONS

NOTE:

42" BRIDGE PEDESTRIAN/BICYCLE RAILING (ALUMINUM, SCHEME 1A, TYPE 1 PICKET INFILL PANEL, INDEX 515-061. SEE SHEET B2-15 FOR RAILING MODIFICATIONS.

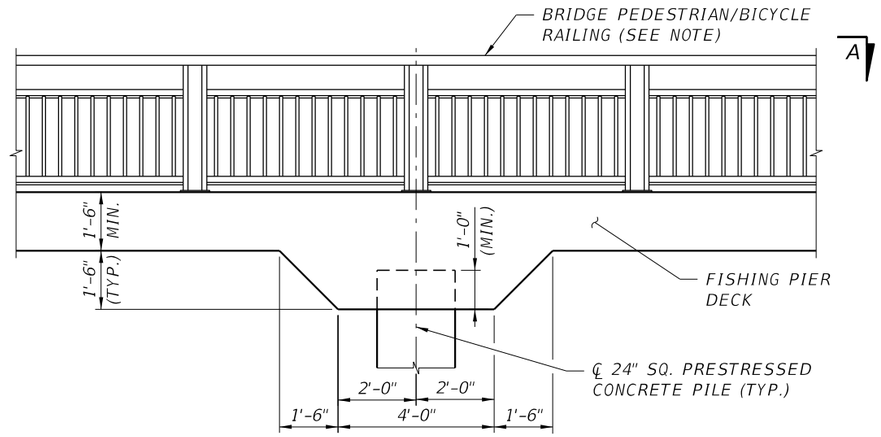

INTERMEDIATE BENT TYPICAL

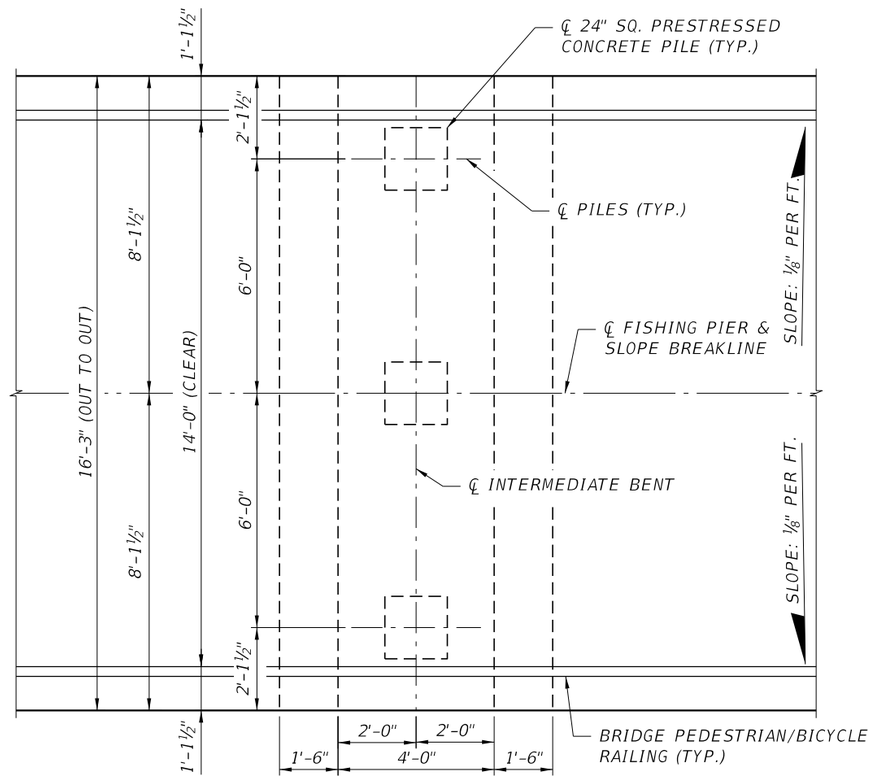

VIEW A-A

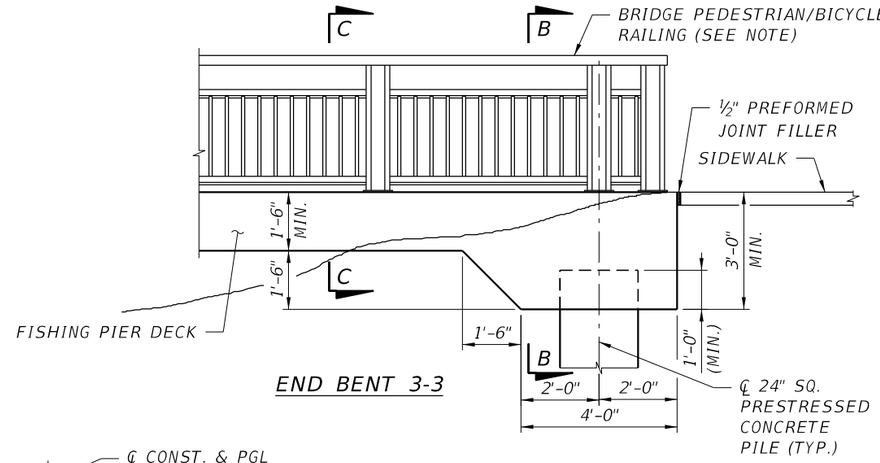

END BENT 3-3

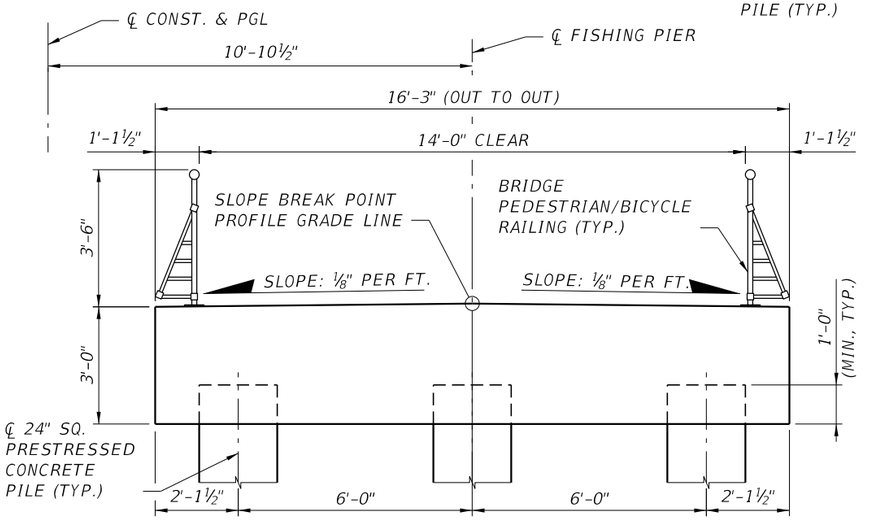

SECTION B-B

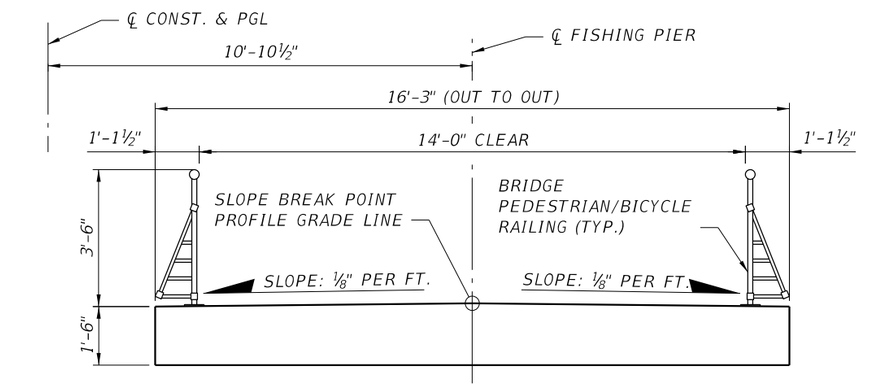

SECTION C-C

BRIDGE NO. 124143

NOTICE: THE OFFICIAL RECORD OF THIS SHEET IS THE ELECTRONIC FILE DIGITALLY SIGNED AND SEALED UNDER RULE 61G15-23.004, F.A.C.

REVISIONS					
DATE	BY	DESCRIPTION	DATE	BY	DESCRIPTION

Kisinger Campo & Associates Corp.
201 N. Franklin Street
Suite 400
Tampa, FL 33602
Alfredo Jose Layrisse, PE No. 75610

DRAWN BY:	CHECKED BY:	DESIGNED BY:	CHECKED BY:
ARF 06-19	JHJ 04-21	CEL 06-19	AJL 06-19

LEE COUNTY PUBLIC WORKS
DEPARTMENT OF TRANSPORTATION

ROAD NO.	COUNTY	COUNTY PROJECT No
CR 865	LEE	CN160002

SHEET TITLE: FISHING PIER DETAILS

REF. DWG. NO.

PROJECT NAME: ESTERO BLVD. (CR 865) OVER BIG CARLOS PASS

SHEET NO. B2-4

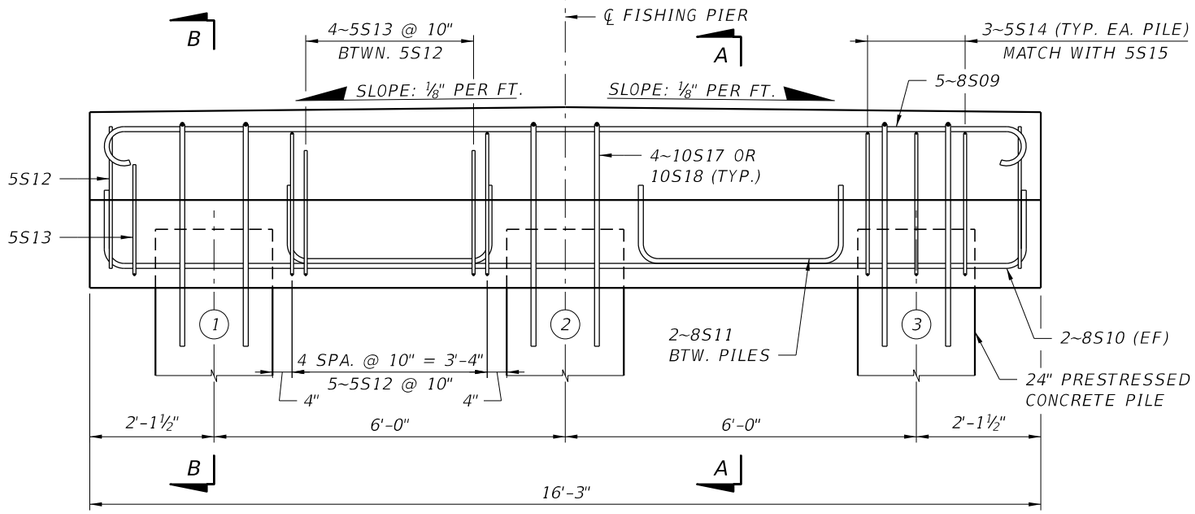

INTERMEDIATE BENT

BENTS 1-2 THRU 1-4, 2-2 THRU 2-4 & 3-2
(8S01 AND 8S02 BARS NOT SHOWN FOR CLARITY)

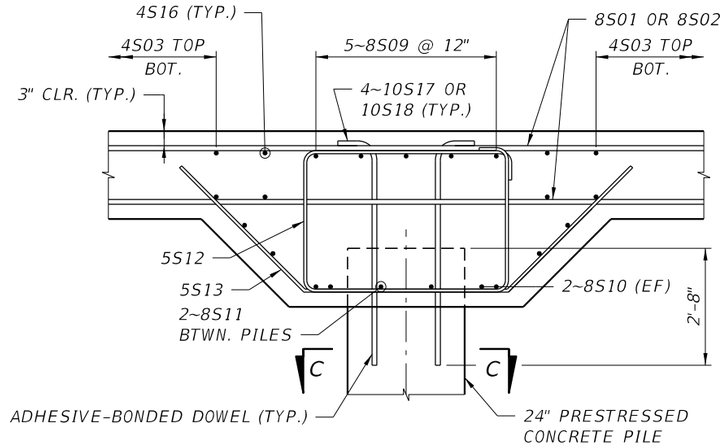

SECTION A-A

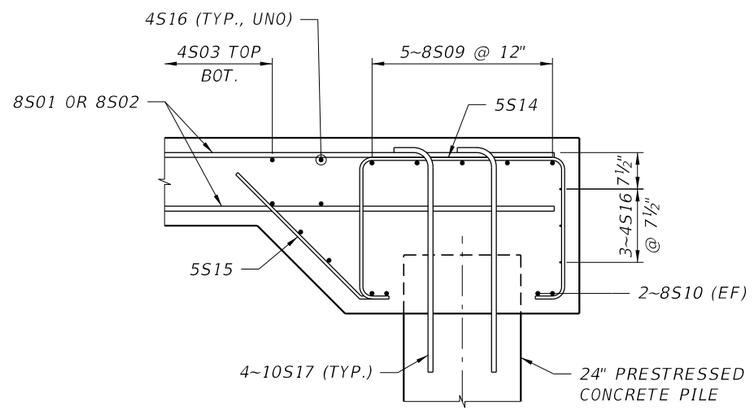

SECTION B-B
END BENT 3-3

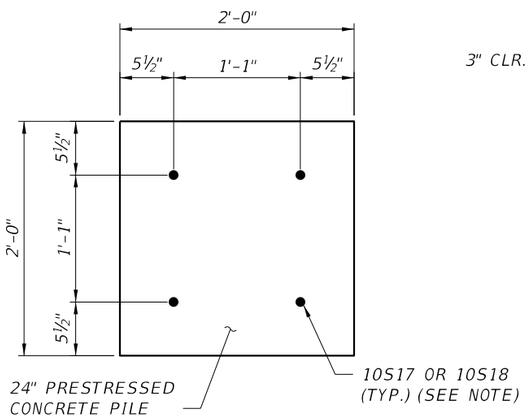

SECTION C-C

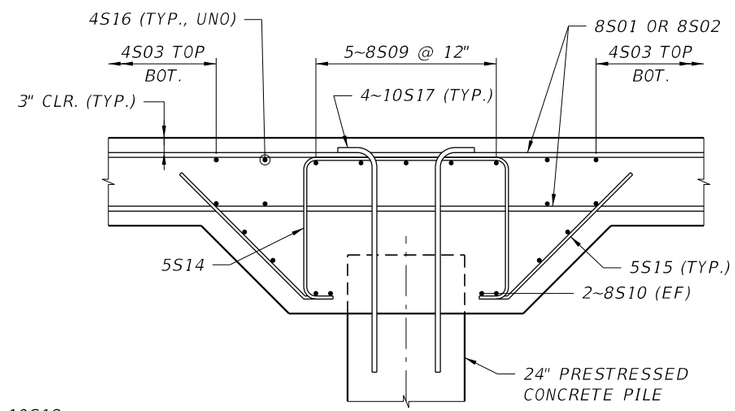

SECTION B-B
INTERMEDIATE BENTS

NOTE:

FOR PRE-APPROVED ADHESIVE BONDING MATERIAL SYSTEMS, REFER TO THE APL AND SECTION 937 OF THE SPECIFICATIONS. ADHESIVE BONDED ANCHORS TO BE INSTALLED IN ACCORDANCE WITH MANUFACTURER'S RECOMMENDATIONS FOR HOLE DIAMETER AND HOLE CLEANING TECHNIQUE AND MEET THE REQUIREMENTS OF SECTION 416 OF THE SPECIFICATIONS.

BRIDGE NO. 124143

REVISIONS					
DATE	BY	DESCRIPTION	DATE	BY	DESCRIPTION

Kisinger Campo & Associates Corp.
201 N. Franklin Street
Suite 400
Tampa, FL 33602
Alfredo Jose Layrisse, PE No. 75610

DRAWN BY: JBH 04-21
CHECKED BY: JHJ 04-21
DESIGNED BY: TGL 12-19
CHECKED BY: JHJ 04-21

LEE COUNTY PUBLIC WORKS
DEPARTMENT OF TRANSPORTATION

ROAD NO.	COUNTY	COUNTY PROJECT No
CR 865	LEE	CN160002

SHEET TITLE: FISHING PIER INTEGRAL BENT DETAILS

REF. DWG. NO.:

PROJECT NAME: ESTERO BLVD. (CR 865) OVER BIG CARLOS PASS

SHEET NO.: B2-5

NOTICE: THE OFFICIAL RECORD OF THIS SHEET IS THE ELECTRONIC FILE DIGITALLY SIGNED AND SEALED UNDER RULE 61G15-23.004, F.A.C.

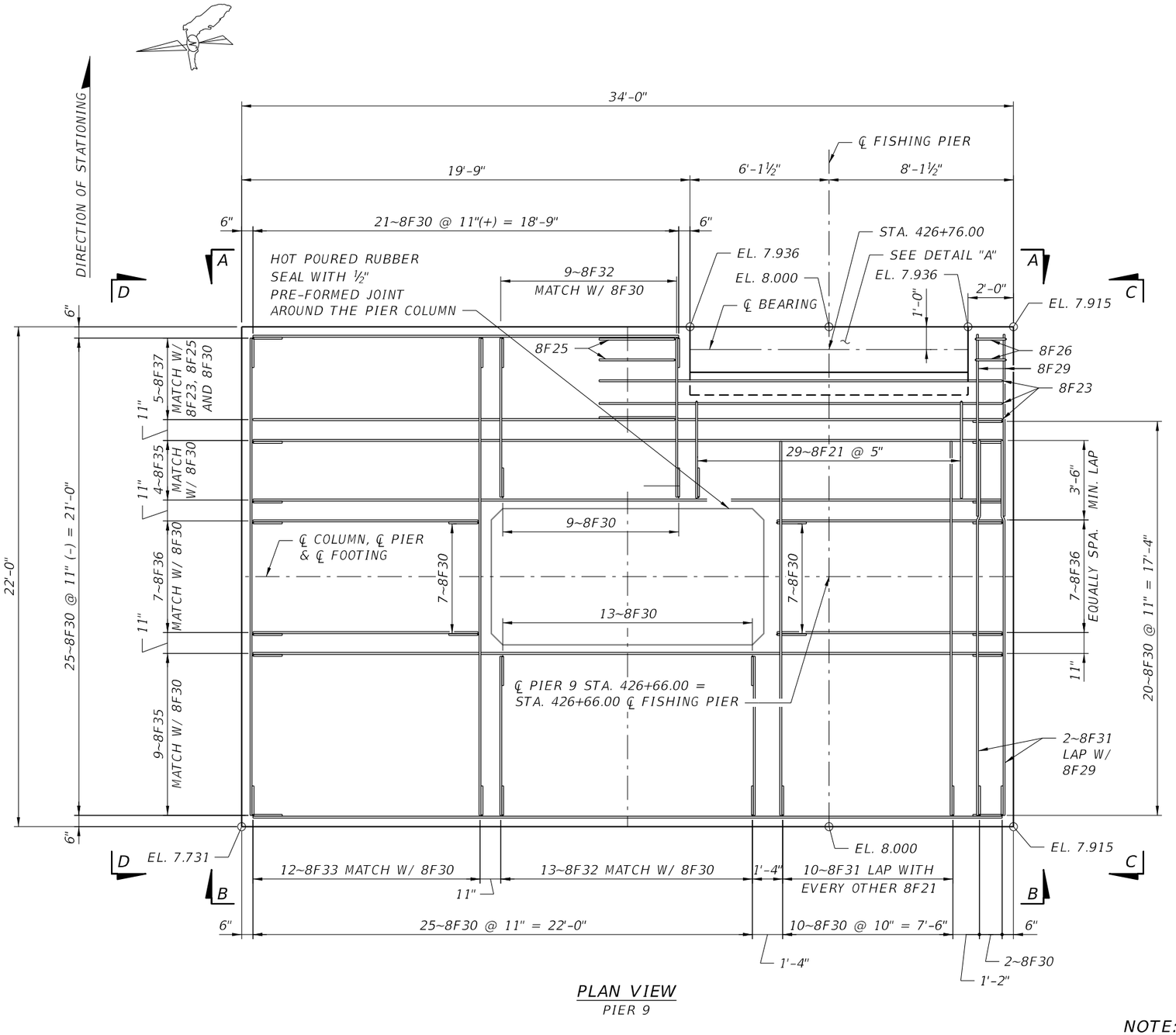

PLAN VIEW
PIER 9

NOTE:

FOR SLAB REINFORCING DETAILS
SEE SHEET B2-8.

BRIDGE NO. 124143

NOTICE: THE OFFICIAL RECORD OF THIS SHEET IS THE ELECTRONIC FILE DIGITALLY SIGNED AND SEALED UNDER RULE 61G15-23.004, F.A.C.

REVISIONS					
DATE	BY	DESCRIPTION	DATE	BY	DESCRIPTION

Kisinger Campo & Associates Corp.
201 N. Franklin Street
Suite 400
Tampa, FL 33602
Alfredo Jose Layrisse, PE No. 75610

DRAWN BY: JBH 04-21
CHECKED BY: JHJ 04-21
DESIGNED BY: TGL 12-19
CHECKED BY: JHJ 04-21

LEE COUNTY PUBLIC WORKS
DEPARTMENT OF TRANSPORTATION

ROAD NO.	COUNTY	COUNTY PROJECT No
CR 865	LEE	CN160002

SHEET TITLE: FISHING PIER
PIER 9 FOOTING DETAILS

REF. DWG. NO.

PROJECT NAME: ESTERO BLVD. (CR 865) OVER BIG CARLOS PASS

SHEET NO. B2-6

jhanna 2/24/2022 3:26:02 PM c:\pwworkingdir\kca-pw.bentley.com_kca-pw-01\josh hanna\dms00783\B1FootingDet01.dgn

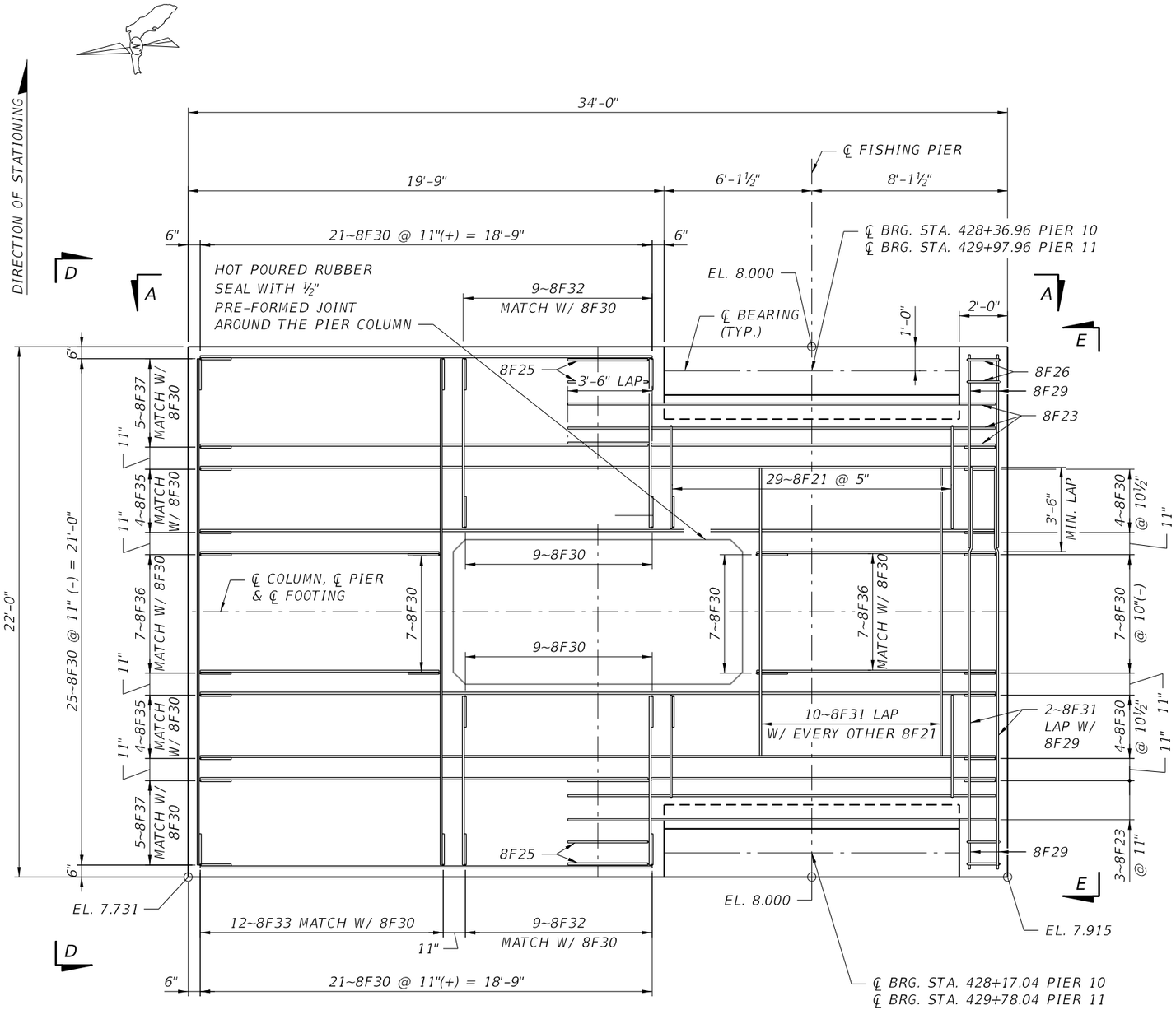

PLAN VIEW
PIER 10 & 11

NOTE:

ELEVATION VIEWS SIMILAR TO PIER 9, FOR SLAB REINFORCING DETAILS SEE SHEET B2-8.

BRIDGE NO. 124143

NOTICE: THE OFFICIAL RECORD OF THIS SHEET IS THE ELECTRONIC FILE DIGITALLY SIGNED AND SEALED UNDER RULE 61G15-23.004, F.A.C.

REVISIONS					
DATE	BY	DESCRIPTION	DATE	BY	DESCRIPTION

Kisinger Campo & Associates Corp.
201 N. Franklin Street
Suite 400
Tampa, FL 33602
Alfredo Jose Layrisse, PE No. 75610

DRAWN BY: JBH 04-21
CHECKED BY: JHJ 04-21
DESIGNED BY: TGL 12-19
CHECKED BY: JHJ 04-21

LEE COUNTY PUBLIC WORKS
DEPARTMENT OF TRANSPORTATION

ROAD NO.	COUNTY	COUNTY PROJECT No
CR 865	LEE	CN160002

SHEET TITLE: FISHING PIER
PIER 10 AND 11 FOOTING DETAILS

REF. DWG. NO.

PROJECT NAME: ESTERO BLVD. (CR 865) OVER BIG CARLOS PASS

SHEET NO. B2-7

jhanna 2/24/2022 3:26:05 PM c:\pwworkingdir\kca-pw.bentley.com_kca-pw-01\josh hanna\dms00783\B1FootingDet02.dgn

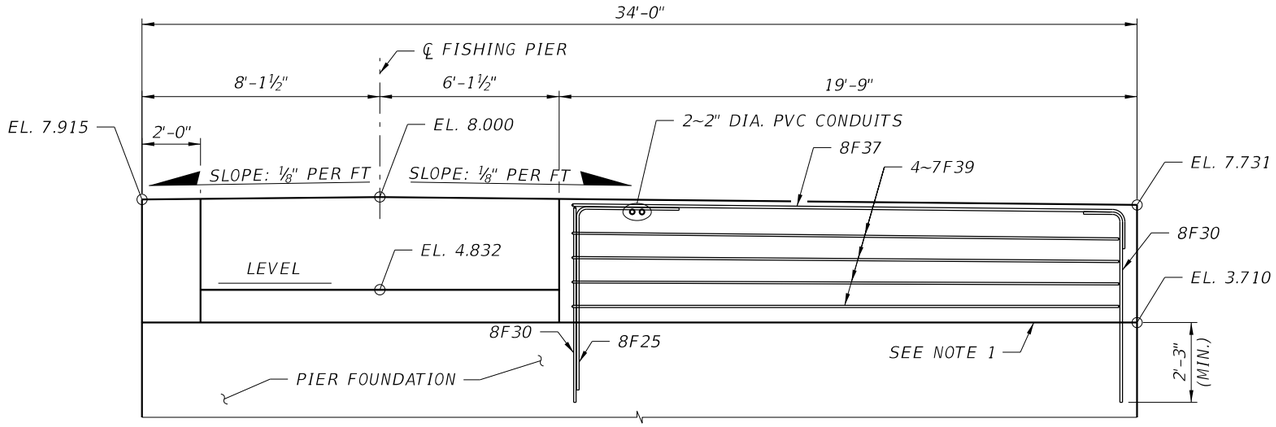

VIEW A-A

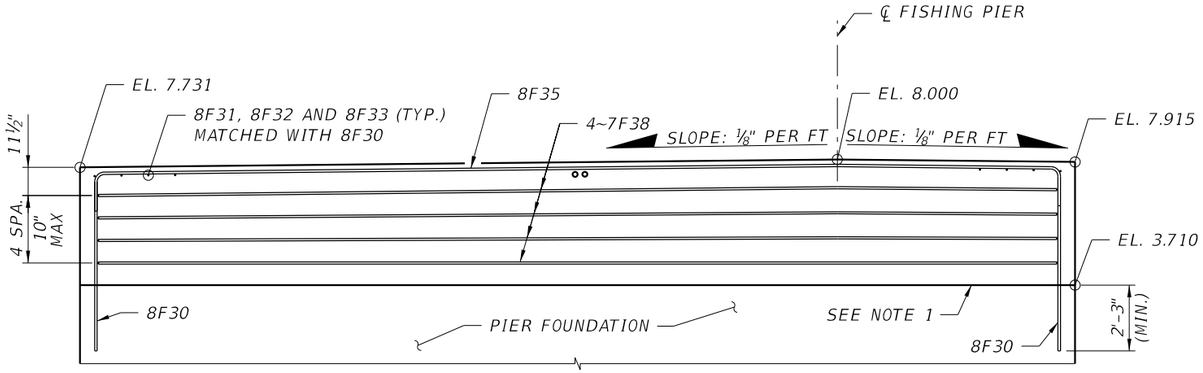

VIEW B-B

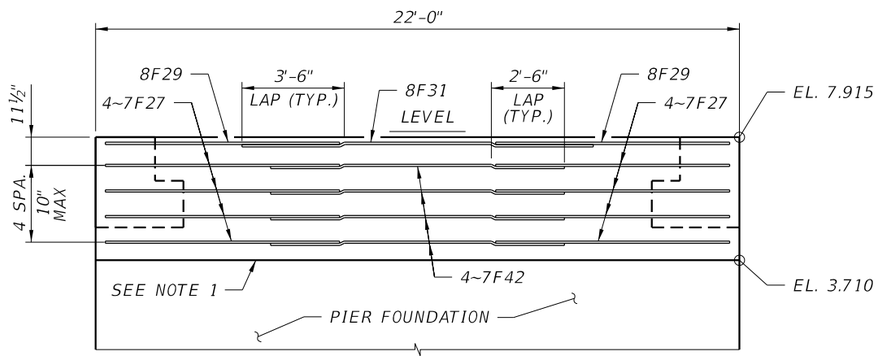

VIEW E-E

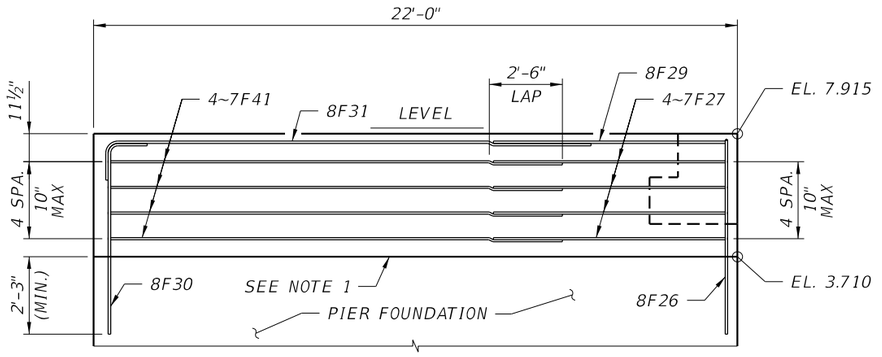

VIEW C-C

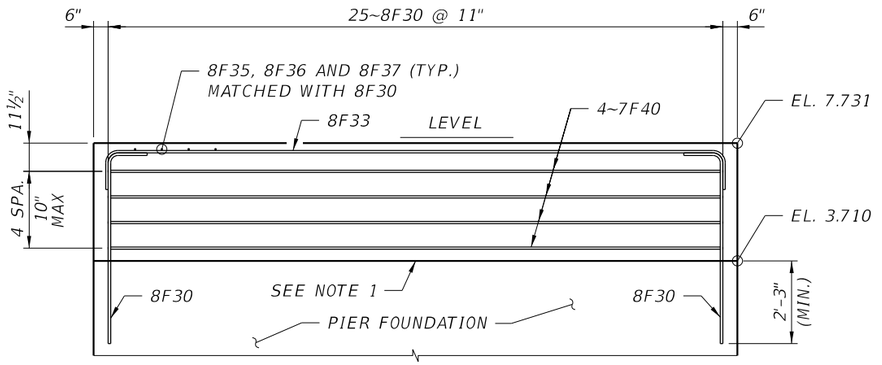

VIEW D-D

NOTES:

1. ROUGHEN TOP SURFACE OF PIER FOUNDATION TO PROVIDE A ¼" AMPLITUDE PRIOR TO POURING FISHING PIER CONCRETE.
2. FISHING PIER CONCRETE POURED OVER THE BRIDGE FOUNDATIONS IS MASS CONCRETE.

BRIDGE NO. 124143

NOTICE: THE OFFICIAL RECORD OF THIS SHEET IS THE ELECTRONIC FILE DIGITALLY SIGNED AND SEALED UNDER RULE 61G15-23.004, F.A.C.

REVISIONS					
DATE	BY	DESCRIPTION	DATE	BY	DESCRIPTION

Kisinger Campo & Associates Corp.
201 N. Franklin Street
Suite 400
Tampa, FL 33602
Alfredo Jose Layrisse, PE No. 75610

DRAWN BY: JBH 09-21
CHECKED BY: JHJ 09-21
DESIGNED BY: TGL 08-21
CHECKED BY: JHJ 09-21

LEE COUNTY PUBLIC WORKS
DEPARTMENT OF TRANSPORTATION

ROAD NO.	COUNTY	COUNTY PROJECT No
CR 865	LEE	CN160002

SHEET TITLE:
FISHING PIER
SLAB REINFORCING DETAILS AT PIER FOUNDATIONS

REF. DWG. NO.

PROJECT NAME:
ESTERO BLVD. (CR 865) OVER BIG CARLOS PASS

SHEET NO.
B2-8

jhanna 2/24/2022 3:26:08 PM c:\pwworkingdir\kca-pw.bentley.com_kca-pw-01\josh hanna\dms00783\B1FootingDet05.dgn

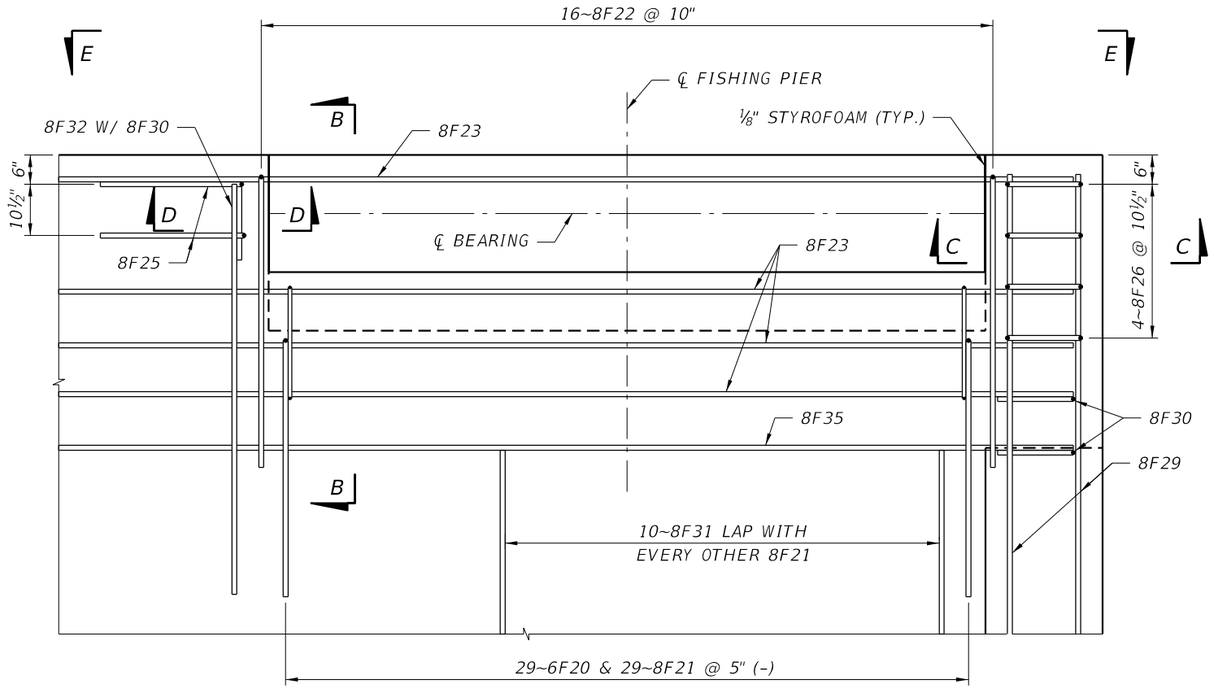

DETAIL A - PLAN VIEW

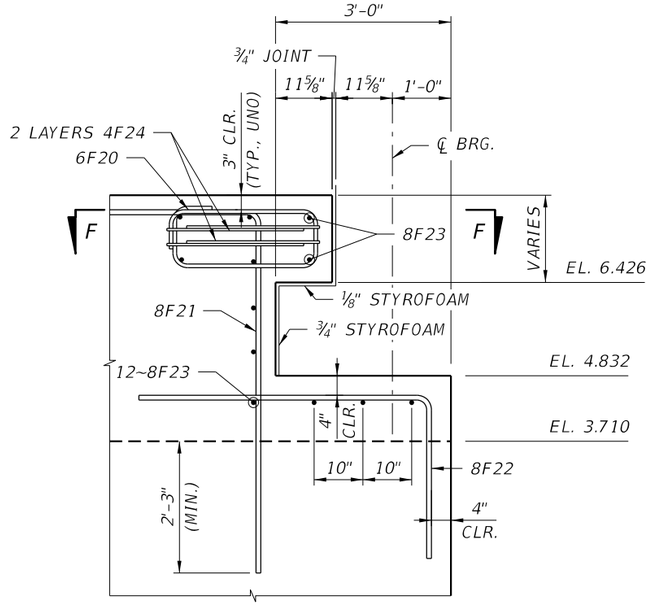

SECTION B-B

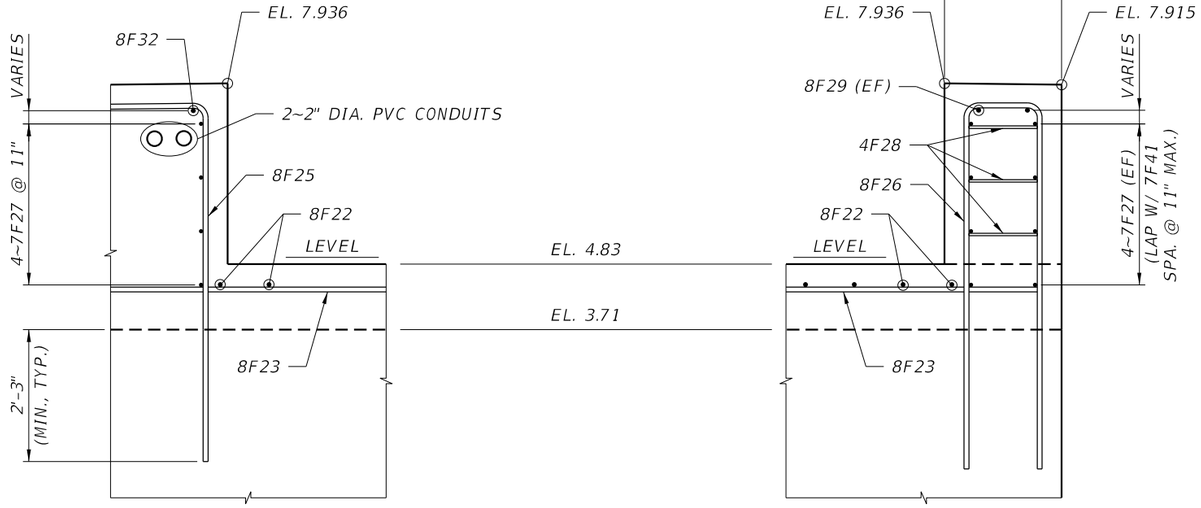

SECTION D-D

SECTION C-C

BRIDGE NO. 124143

NOTICE: THE OFFICIAL RECORD OF THIS SHEET IS THE ELECTRONIC FILE DIGITALLY SIGNED AND SEALED UNDER RULE 61G15-23.004, F.A.C.

REVISIONS					
DATE	BY	DESCRIPTION	DATE	BY	DESCRIPTION

Kisinger Campo & Associates Corp.
201 N. Franklin Street
Suite 400
Tampa, FL 33602
Alfredo Jose Layrisse, PE No. 75610

DRAWN BY: JBH 04-21
CHECKED BY: JHJ 04-21
DESIGNED BY: TGL 12-19
CHECKED BY: JHJ 04-21

LEE COUNTY PUBLIC WORKS
DEPARTMENT OF TRANSPORTATION

ROAD NO.	COUNTY	COUNTY PROJECT No
CR 865	LEE	CN160002

SHEET TITLE: FISHING PIER
PIER FOOTING DETAILS (1 OF 2)

REF. DWG. NO.:

PROJECT NAME: ESTERO BLVD. (CR 865) OVER BIG CARLOS PASS

SHEET NO.: B2-9

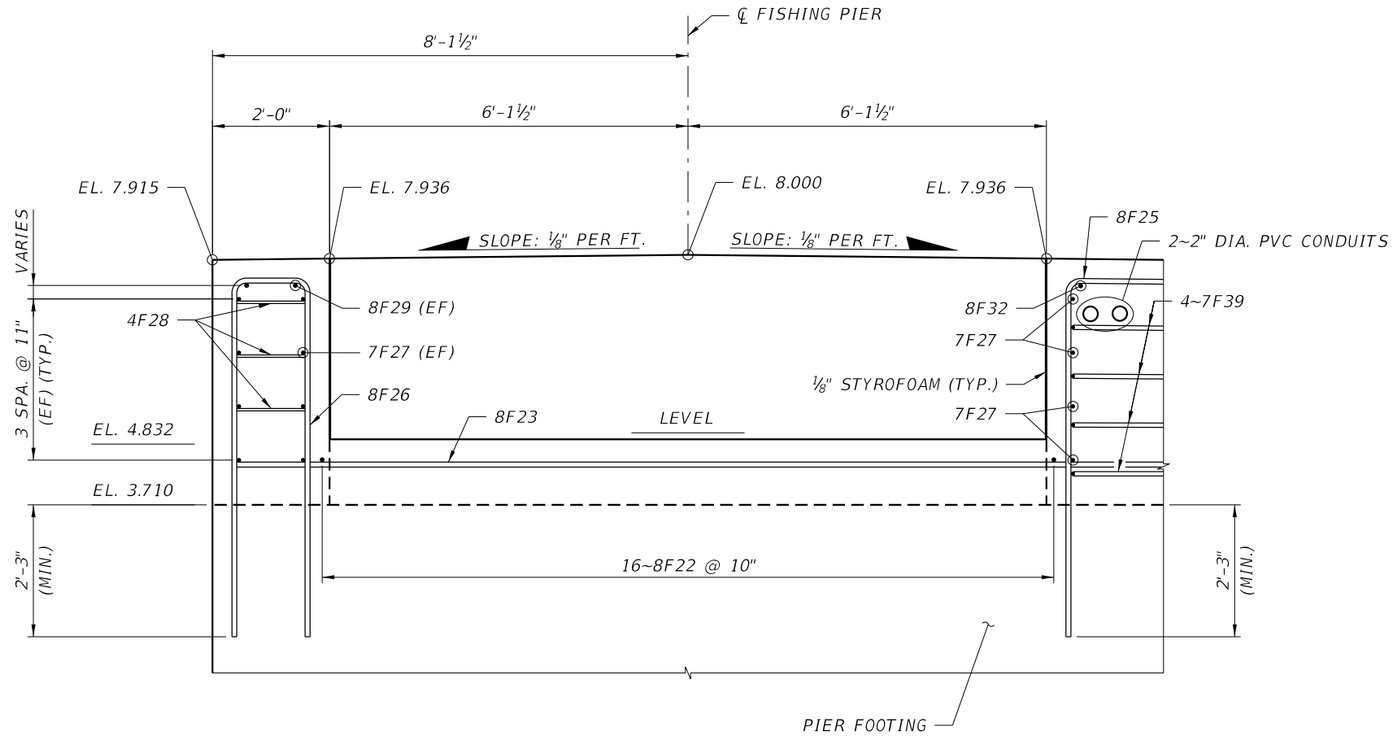

VIEW E-E

(ONLY SUBSTRUCTURE STEEL SHOWN FOR CLARITY)

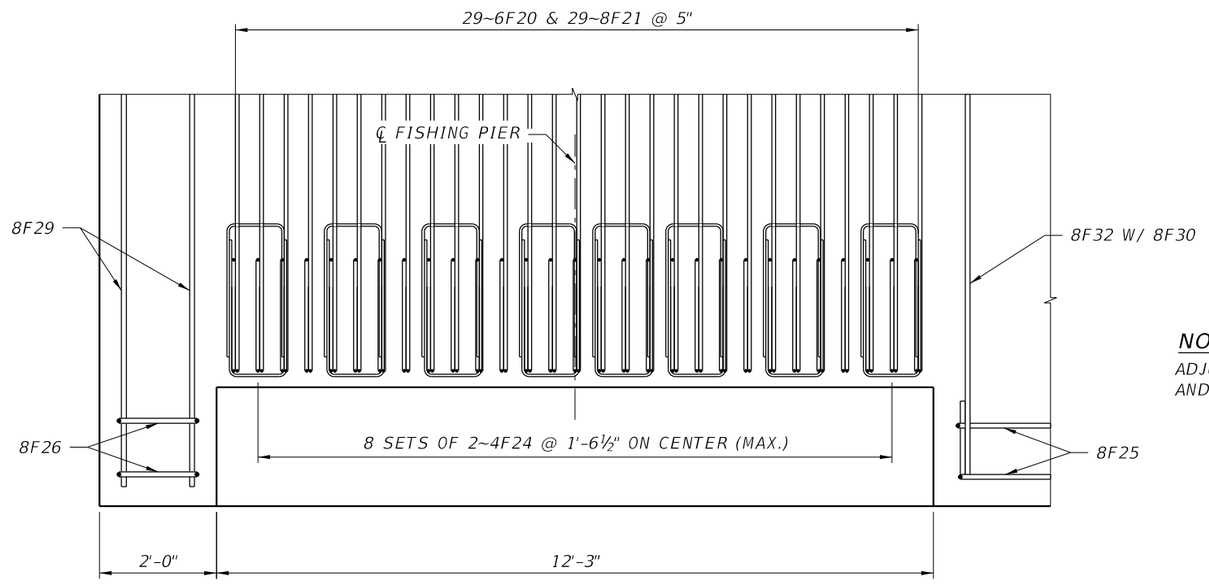

SECTION F-F

NOTE:

ADJUST 4F24 BARS TO AVOID CONFLICT WITH 6F20 AND 8F21 BARS WITHIN PARAMETERS.

BRIDGE NO. 124143

NOTICE: THE OFFICIAL RECORD OF THIS SHEET IS THE ELECTRONIC FILE DIGITALLY SIGNED AND SEALED UNDER RULE 61G15-23.004, F.A.C.

REVISIONS					
DATE	BY	DESCRIPTION	DATE	BY	DESCRIPTION

Kisinger Campo & Associates Corp.
201 N. Franklin Street
Suite 400
Tampa, FL 33602
Alfredo Jose Layrisse, PE No. 75610

DRAWN BY: JBH 04-21
CHECKED BY: JHJ 04-21
DESIGNED BY: TGL 12-19
CHECKED BY: JHJ 04-21

LEE COUNTY PUBLIC WORKS
DEPARTMENT OF TRANSPORTATION

ROAD NO.	COUNTY	COUNTY PROJECT No
CR 865	LEE	CN160002

SHEET TITLE: FISHING PIER
PIER FOOTING DETAILS (2 OF 2)

REF. DWG. NO.:

PROJECT NAME: ESTERO BLVD. (CR 865) OVER BIG CARLOS PASS

SHEET NO.: B2-10

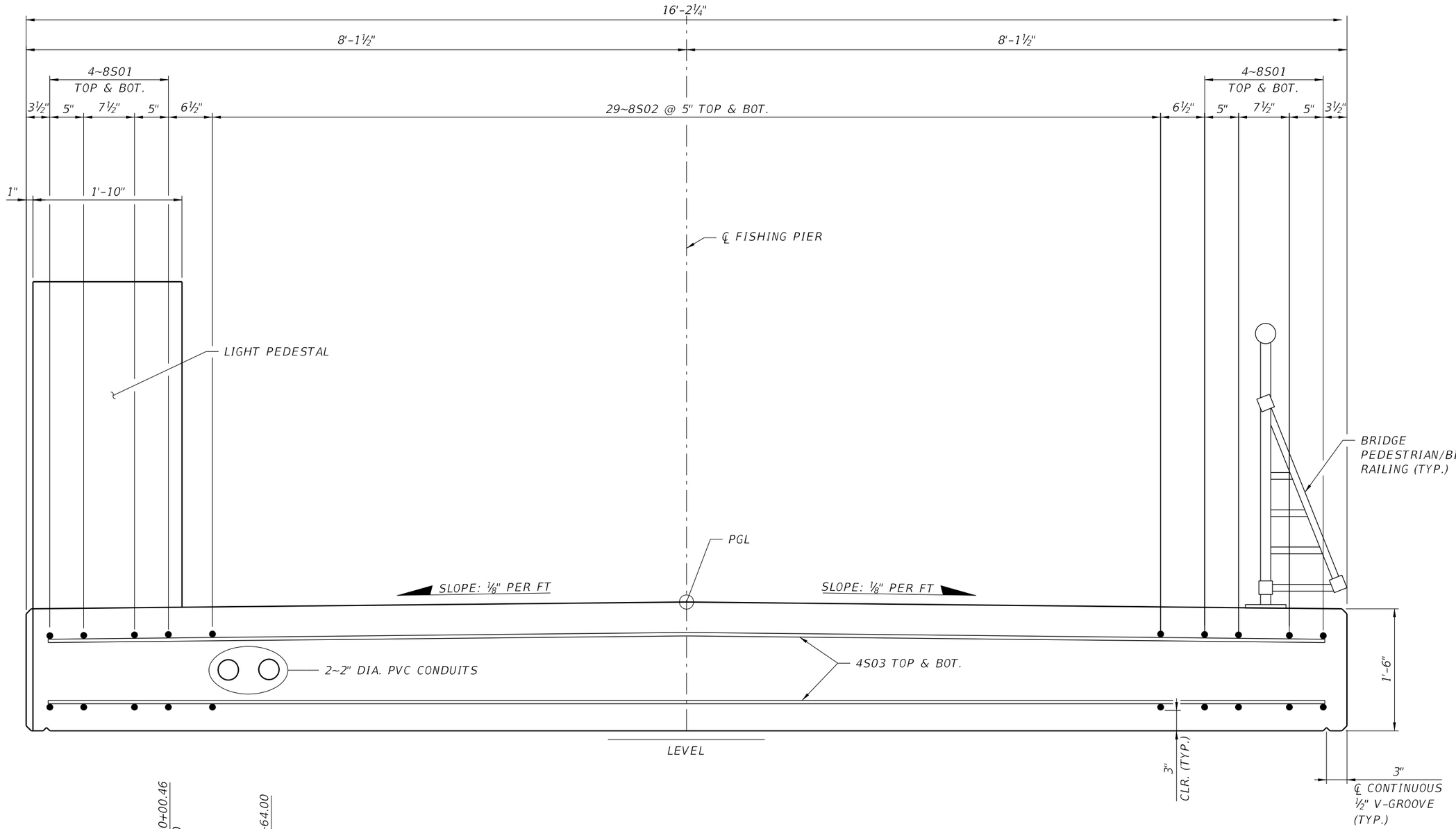

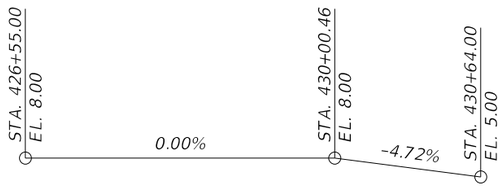

PROFILE GRADE

TYPICAL SECTION

NOTES:

1. 3'-6" LAP LENGTH FOR NO. 8 BAR.
2. REFER TO STANDARD INDEX 630-010 EXPANSION FITTING DETAIL 'A' FOR CONDUIT CROSSING OPEN JOINTS.

BRIDGE NO. 124143

REVISIONS					
DATE	BY	DESCRIPTION	DATE	BY	DESCRIPTION

Kisinger Campo & Associates Corp.
201 N. Franklin Street
Suite 400
Tampa, FL 33602
Alfredo Jose Layrisse, PE No. 75610

DRAWN BY:	CHECKED BY:	DESIGNED BY:	CHECKED BY:
JBH 04-21	JHJ 04-21	TGL 12-19	JHJ 04-21

LEE COUNTY PUBLIC WORKS
DEPARTMENT OF TRANSPORTATION

ROAD NO.	COUNTY	COUNTY PROJECT No
CR 865	LEE	CN160002

SHEET TITLE: FISHING PIER SUPERSTRUCTURE DETAILS (1 OF 4)

REF. DWG. NO.:

PROJECT NAME: ESTERO BLVD. (CR 865) OVER BIG CARLOS PASS

SHEET NO.: B2-11

NOTICE: THE OFFICIAL RECORD OF THIS SHEET IS THE ELECTRONIC FILE DIGITALLY SIGNED AND SEALED UNDER RULE 61G15-23.004, F.A.C.

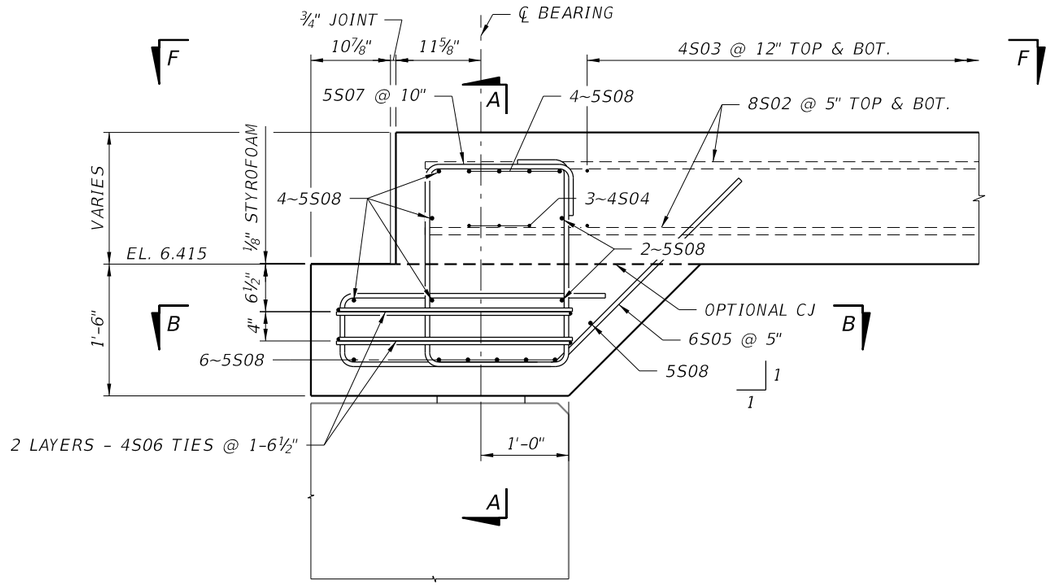

END BENT SUPERSTRUCTURE DETAIL

END BENTS 1-1, 1-5, 2-1 AND 2-5

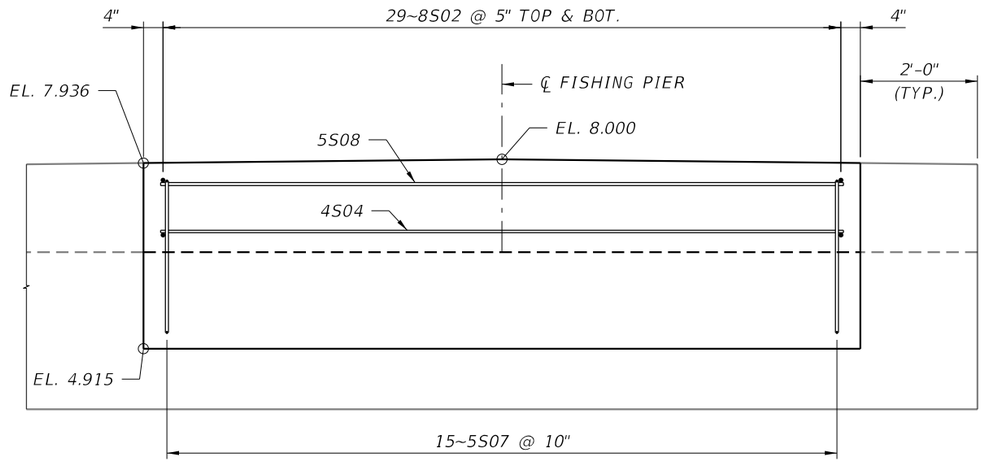

SECTION A-A

(ONLY SUPERSTRUCTURE STEEL SHOWN FOR CLARITY)

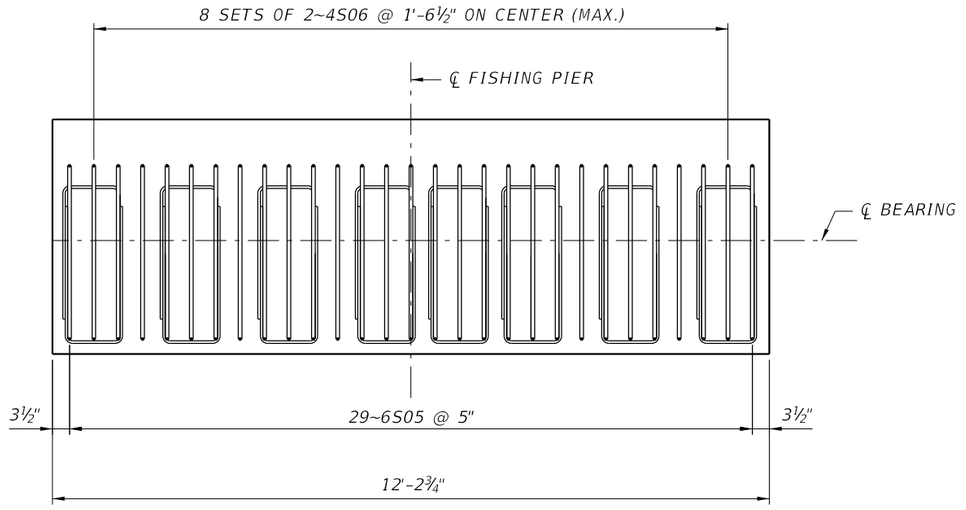

SECTION B-B

NOTE:

ADJUST 4S06 BARS TO AVOID CONFLICT WITH 6S05 BARS WITHIN PARAMETERS.

BRIDGE NO. 124143

REVISIONS					
DATE	BY	DESCRIPTION	DATE	BY	DESCRIPTION

Kisinger Campo & Associates Corp.
201 N. Franklin Street
Suite 400
Tampa, FL 33602
Alfredo Jose Layrisse, PE No. 75610

DRAWN BY:	CHECKED BY:	DESIGNED BY:	CHECKED BY:
JBH 04-21	JHJ 04-21	TGL 12-19	JHJ 04-21

LEE COUNTY PUBLIC WORKS
DEPARTMENT OF TRANSPORTATION

ROAD NO.	COUNTY	COUNTY PROJECT No
CR 865	LEE	CN160002

SHEET TITLE: FISHING PIER SUPERSTRUCTURE DETAILS (2 OF 4)

REF. DWG. NO.:

PROJECT NAME: ESTERO BLVD. (CR 865) OVER BIG CARLOS PASS

SHEET NO.: B2-12

NOTICE: THE OFFICIAL RECORD OF THIS SHEET IS THE ELECTRONIC FILE DIGITALLY SIGNED AND SEALED UNDER RULE 61G15-23.004, F.A.C.

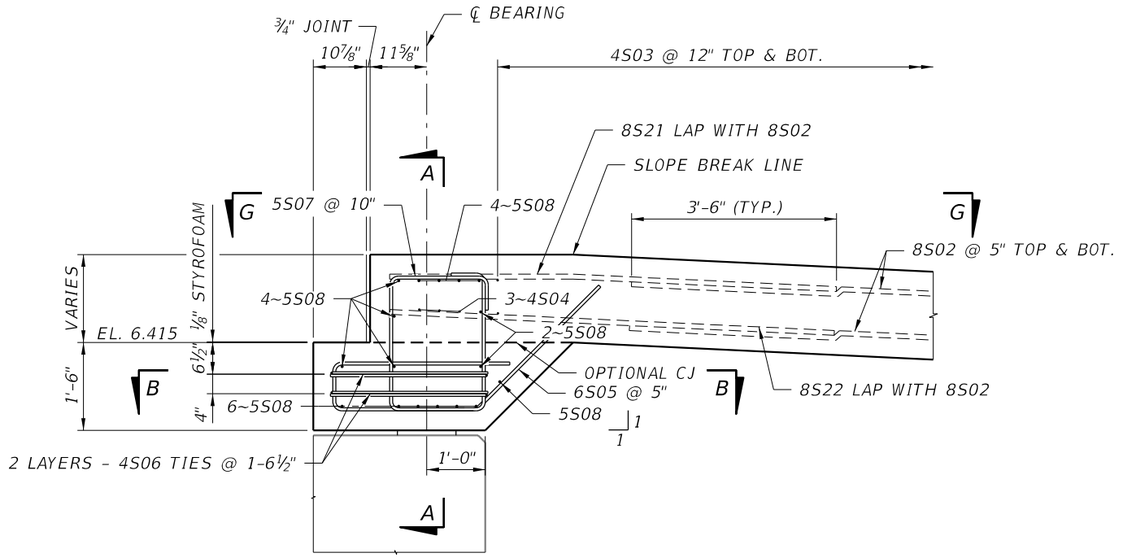

END BENT SUPERSTRUCTURE DETAIL
END BENT 3-1

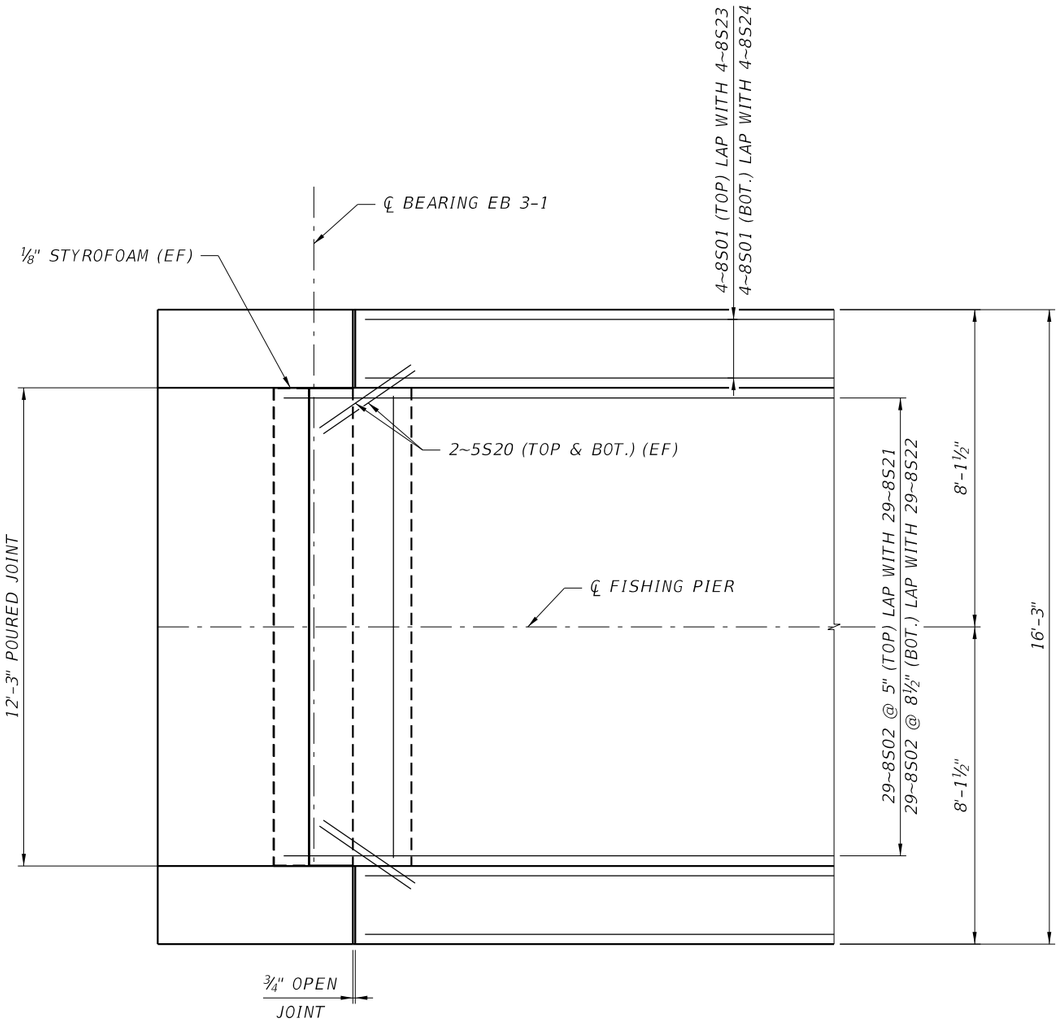

VIEW G-G

BRIDGE NO. 124143

REVISIONS					
DATE	BY	DESCRIPTION	DATE	BY	DESCRIPTION

Kisinger Campo & Associates Corp.
201 N. Franklin Street
Suite 400
Tampa, FL 33602
Alfredo Jose Layrisse, PE No. 75610

DRAWN BY:	JBH 04-21
CHECKED BY:	JHJ 04-21
DESIGNED BY:	TGL 12-19
CHECKED BY:	JHJ 04-21

LEE COUNTY PUBLIC WORKS
DEPARTMENT OF TRANSPORTATION

ROAD NO.	COUNTY	COUNTY PROJECT No
CR 865	LEE	CN160002

SHEET TITLE: FISHING PIER SUPERSTRUCTURE DETAILS (3 OF 4)

REF. DWG. NO.:

PROJECT NAME: ESTERO BLVD. (CR 865) OVER BIG CARLOS PASS

SHEET NO.: B2-13

NOTICE: THE OFFICIAL RECORD OF THIS SHEET IS THE ELECTRONIC FILE DIGITALLY SIGNED AND SEALED UNDER RULE 61G15-23.004, F.A.C.

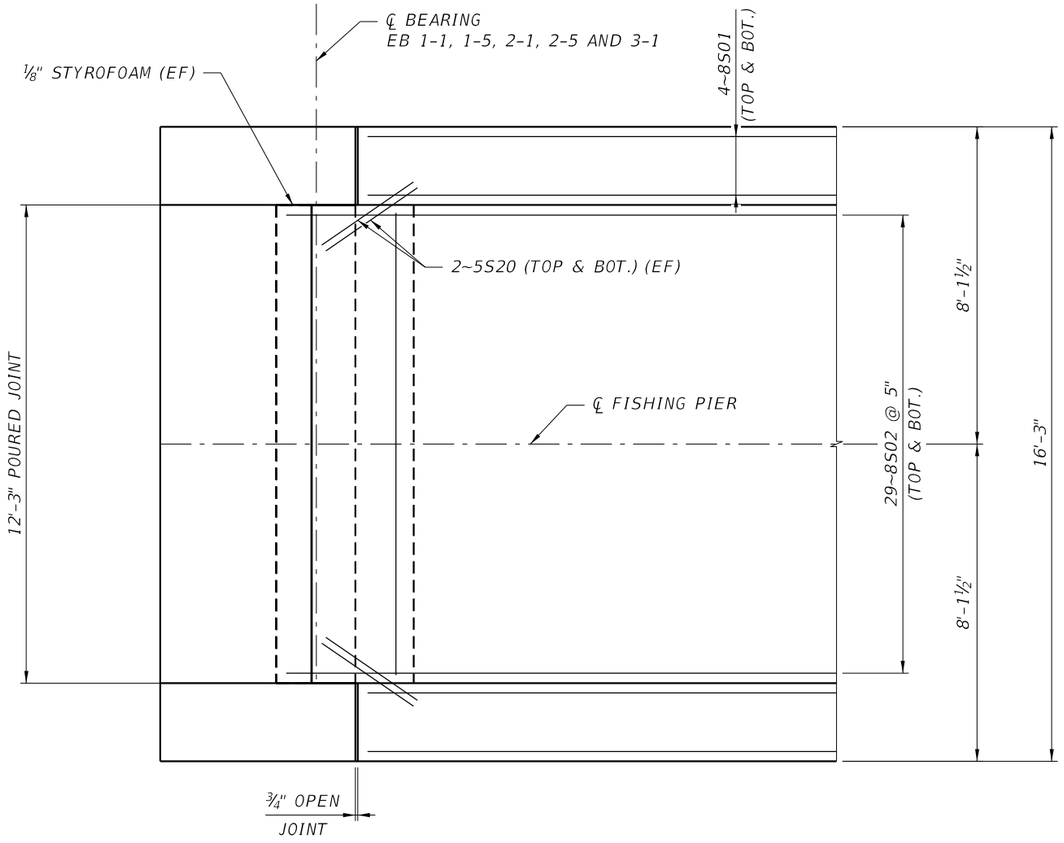

VIEW F-F

POURED EXPANSION JOINT DATA TABLE INDEX 458-110			Table Date 1-01-09
LOCATION*	DIM. "A" @ 70°F	TOTAL DESIGN MOVEMENT	DIM. "A" ADJUSTMENT PER 10°F
EB 1-1	¾"	½"	1/16"
EB 1-5	¾"	½"	1/16"
EB 2-1	¾"	½"	1/16"
EB 2-5	¾"	½"	1/16"
EB 3-1	¾"	½"	1/16"

NOTE:
Dim. "A" adjustment per 10°F shown is measured perpendicular to ℄ Expansion Joint. Work this table with Standard Plans Index 458-110.

* SIDEWALK COVER PLATES REQUIRED AT ALL LOCATIONS

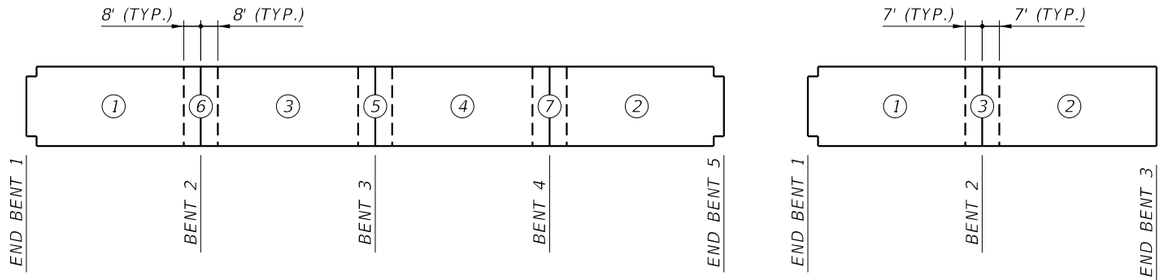

UNITS 1 AND 2

UNIT 3

POUR SEQUENCE

NOTE: A MINIMUM OF 72 HOURS IS REQUIRED BETWEEN POURS IN A GIVEN CONTINUOUS UNIT.

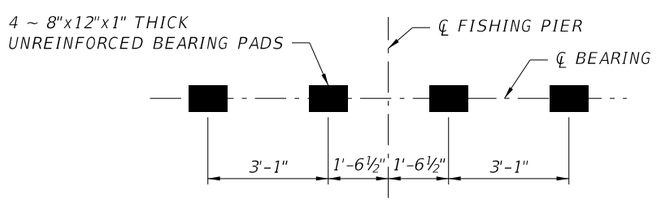

BEARING LAYOUT PLAN

EB 1-1, 1-5, 2-1, 2-5 AND 3-1

NOTE: NEOPRENE IN BEARING PADS SHALL HAVE A SHEAR MODULUS (G) OF 110 PSI.

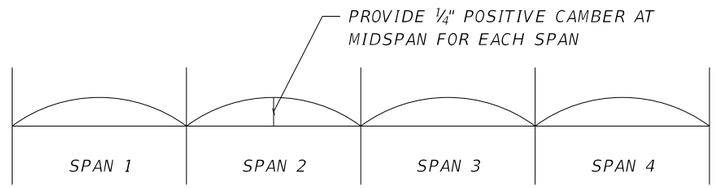

CAMBER SCHEDULE

UNITS 1 AND 2 SHOWN, UNIT 3 SIMILAR

BRIDGE NO. 124143

REVISIONS					
DATE	BY	DESCRIPTION	DATE	BY	DESCRIPTION

Kisinger Campo & Associates Corp.
201 N. Franklin Street
Suite 400
Tampa, FL 33602
Alfredo Jose Layrisse, PE No. 75610

DRAWN BY:	CHECKED BY:	DESIGNED BY:	CHECKED BY:
JBH 04-21	JHJ 04-21	TGL 12-19	JHJ 04-21

LEE COUNTY PUBLIC WORKS
DEPARTMENT OF TRANSPORTATION

ROAD NO.	COUNTY	COUNTY PROJECT No
CR 865	LEE	CN160002

SHEET TITLE: FISHING PIER
SUPERSTRUCTURE DETAILS (4 OF 4)

REF. DWG. NO.:

PROJECT NAME: ESTERO BLVD. (CR 865) OVER BIG CARLOS PASS

SHEET NO.: B2-14

NOTICE: THE OFFICIAL RECORD OF THIS SHEET IS THE ELECTRONIC FILE DIGITALLY SIGNED AND SEALED UNDER RULE 61G15-23.004, F.A.C.

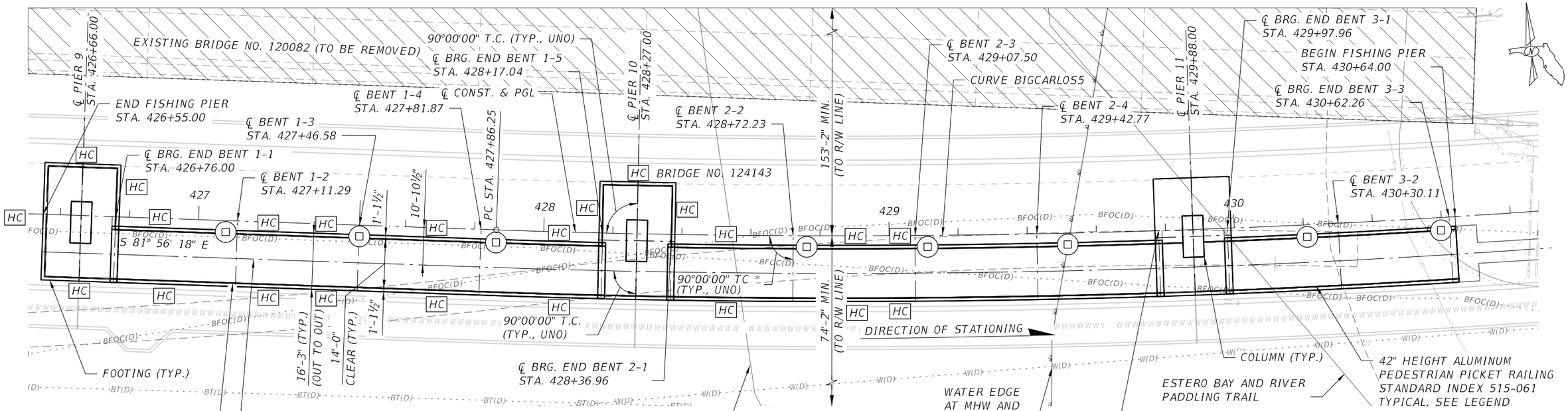

RAILING LAYOUT

CURVE BIGCARLOS5
P.I. STATION 429+93.05
DELTA = 8° 15' 25" (LT)
DEGREE = 1° 59' 59"
TANGENT = 206.79'
LENGTH = 412.87'
RADIUS = 2,865.00
P.C. STATION 427+86.25
P.R.C. STATION 431+99.13
e = NC

* ℄ BEARING FOR END BENTS 1-1, 1-5, 2-1, 2-5 AND 3-1 ARE ALLIGNED PARALLEL TO THE FACE OF THE RESPECTIVE BRIDGE PIERS.

LEGEND

TO BE REMOVED

NOTES:

1. ALL DIMENSION ARE MEASURED ALONG ℄ CONSTRUCTION & PGL.
2. FOR CONCRETE POST LOCATIONS SEE POST DETAILS.

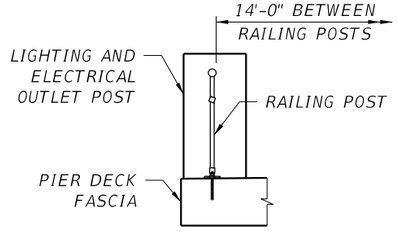

AT POST LOCATIONS

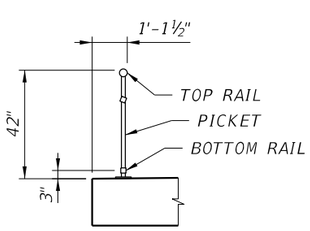

BETWEEN POST LOCATIONS

42" PIER RAILING DETAILS

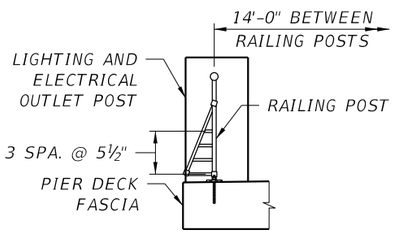

AT POST LOCATIONS

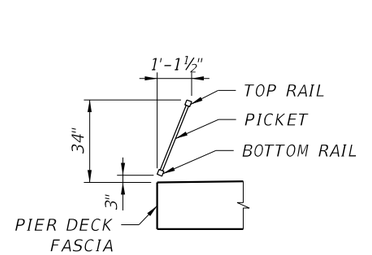

BETWEEN POST LOCATIONS

MODIFIED ADA PIER RAILING DETAILS

NOTES:

1. SUBMIT SIGNED AND SEAL PLANS TO THE EOR FOR APPROVAL PRIOR INSTALLATION.
2. FOR ADDITIONAL DETAILS, SEE "POST DETAILS" SHEET.
3. THE ADHESIVE BONDED ANCHORS SHALL BE INSTALLED IN ACCORDANCE WITH THE FDOT STANDARD SPECIFICATIONS - SECTION 416.
4. THE ADHESIVE BONDING MATERIAL SHALL BE TYPE HSHV IN ACCORDANCE WITH THE FDOT STANDARD SPECIFICATIONS - SECTION 937.

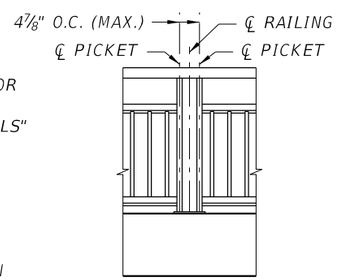

VIEW A-A

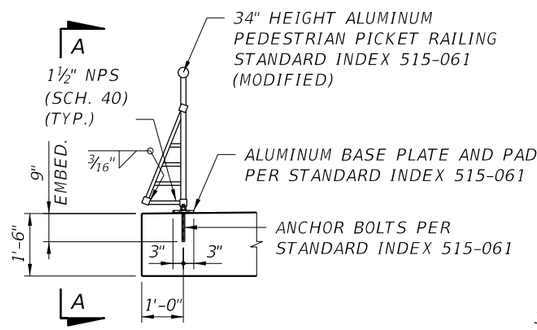

LEGEND

HC — INDICATES THE APPROXIMATE LOCATION OF ADA ACCESSIBLE RAILING PANEL, 7'-3" PANEL LENGTH (34" ALUMINUM PICKET STYLE STANDARD INDEX 515-061 MODIFIED) SEE TABLE SHEET B2-16. THE RAILING SHALL BE FABRICATED IN ACCORDANCE WITH STANDARD INDEX 515-061 WITH THE EXCEPTION OF THE POST ORIENTATION AND THE SLANTING OF THE PICKETS BY THE ADDITION OF 1-½" NPS (SCH. 40) TUBE AT THE BOTTOM RAIL, AND POST LOCATIONS. SEE DETAILS ON THIS SHEET FOR THE MODIFICATIONS TO THE STANDARD RAILING.

BRIDGE NO. 124143

REVISIONS					
DATE	BY	DESCRIPTION	DATE	BY	DESCRIPTION

Kisinger Campo & Associates Corp.
201 N. Franklin Street
Suite 400
Tampa, FL 33602
Alfredo Jose Layrisse, PE No. 75610

DRAWN BY: ARF 06-19
CHECKED BY: JHJ 04-21
DESIGNED BY: CEL 06-19
CHECKED BY: AJL 06-19

LEE COUNTY PUBLIC WORKS
DEPARTMENT OF TRANSPORTATION

ROAD NO.	COUNTY	COUNTY PROJECT No
CR 865	LEE	CN160002

SHEET TITLE: FISHING PIER
RAILING LAYOUT AND DETAILS

REF. DWG. NO.:

PROJECT NAME: ESTERO BLVD. (CR 865) OVER BIG CARLOS PASS

SHEET NO.: B2-15

NOTICE: THE OFFICIAL RECORD OF THIS SHEET IS THE ELECTRONIC FILE DIGITALLY SIGNED AND SEALED UNDER RULE 61G15-23.004, F.A.C.

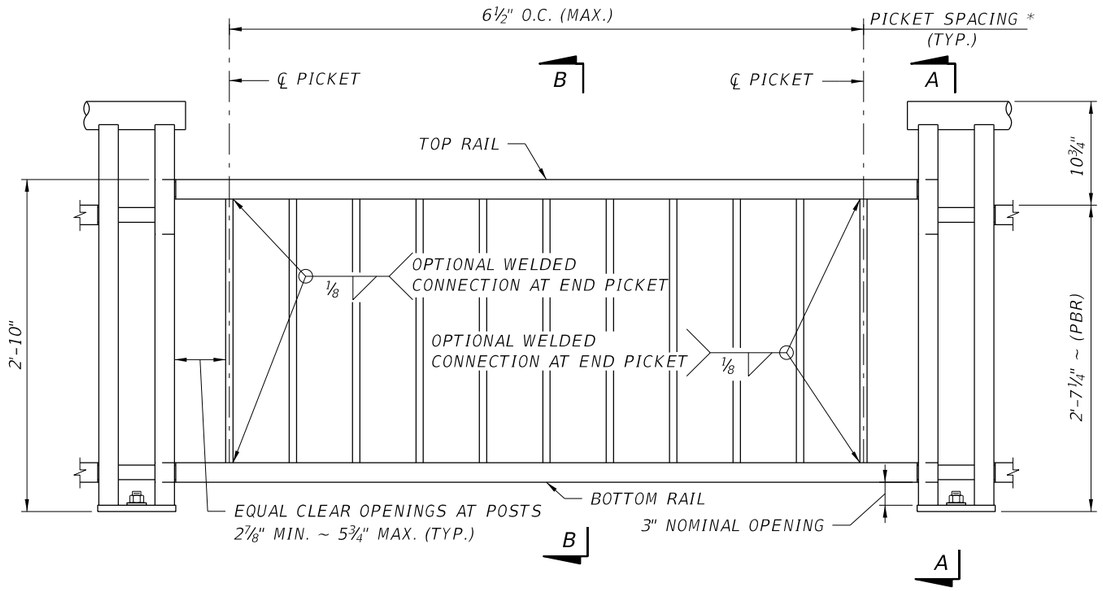

MODIFIED TYPE 1 - MODIFIED PICKET INFILL PANEL

PICKET NOTES:

* PICKET SPACING OF 6½" CENTERS IS BASED ON A ¾" Ø BAR FOR STANDARD APPLICATIONS.

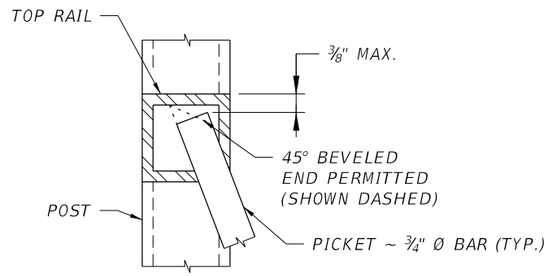

DETAIL "1A"

(TOP OF PICKET CONNECTION)

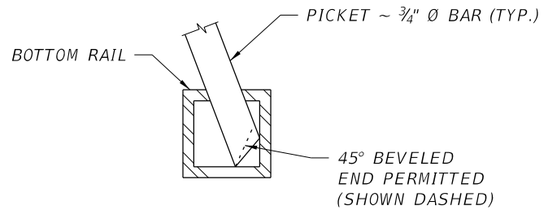

DETAIL "1B"

(BOTTOM OF PICKET CONNECTION)

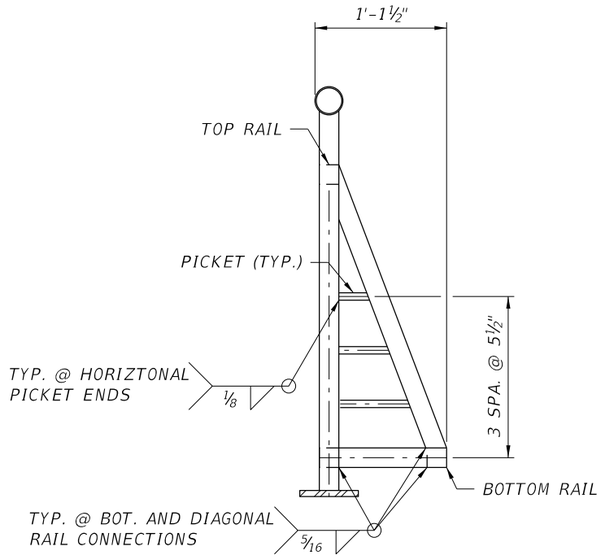

SECTION A-A

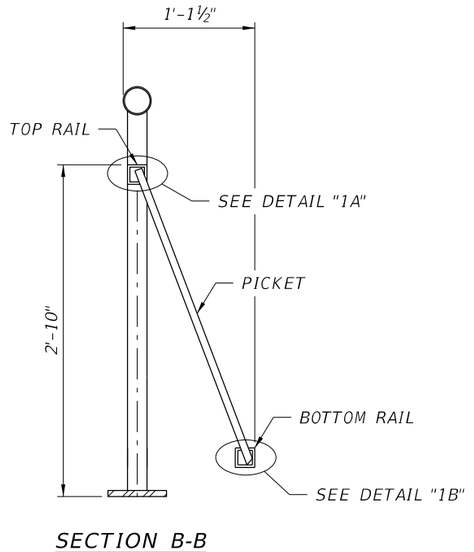

SECTION B-B

NOTES:

1. SUBMIT SHOP DRAWINGS FOR REVIEW AND APPROVAL.
2. SEE SHEET B2-15 FOR LOCATIONS OF MODIFIED PICKET INFILL PANEL.

NOTICE: THE OFFICIAL RECORD OF THIS SHEET IS THE ELECTRONIC FILE DIGITALLY SIGNED AND SEALED UNDER RULE 61G15-23.004, F.A.C.

REVISIONS					
DATE	BY	DESCRIPTION	DATE	BY	DESCRIPTION

Kisinger Campo & Associates Corp.
201 N. Franklin Street
Suite 400
Tampa, FL 33602
Alfredo Jose Layrisse, PE No. 75610

DRAWN BY: LM 12-21
CHECKED BY: SKB 12-21
DESIGNED BY: LM 12-21
CHECKED BY: SBK 12-21

LEE COUNTY PUBLIC WORKS
DEPARTMENT OF TRANSPORTATION

ROAD NO.	COUNTY	COUNTY PROJECT No
CR 865	LEE	CN160002

SHEET TITLE: MODIFICATIONS TO STANDARD PLANS, INDEX 515-062

REF. DWG. NO.

PROJECT NAME: ESTERO BLVD. (CR 865) OVER BIG CARLOS PASS

SHEET NO. B2-16

jhanna 2/24/2022 3:26:25 PM c:\pwworkingdir\kca-pw.bentley.com_kca-pw-01\josh hanna\dms00783\B1MiscDet11.dgn

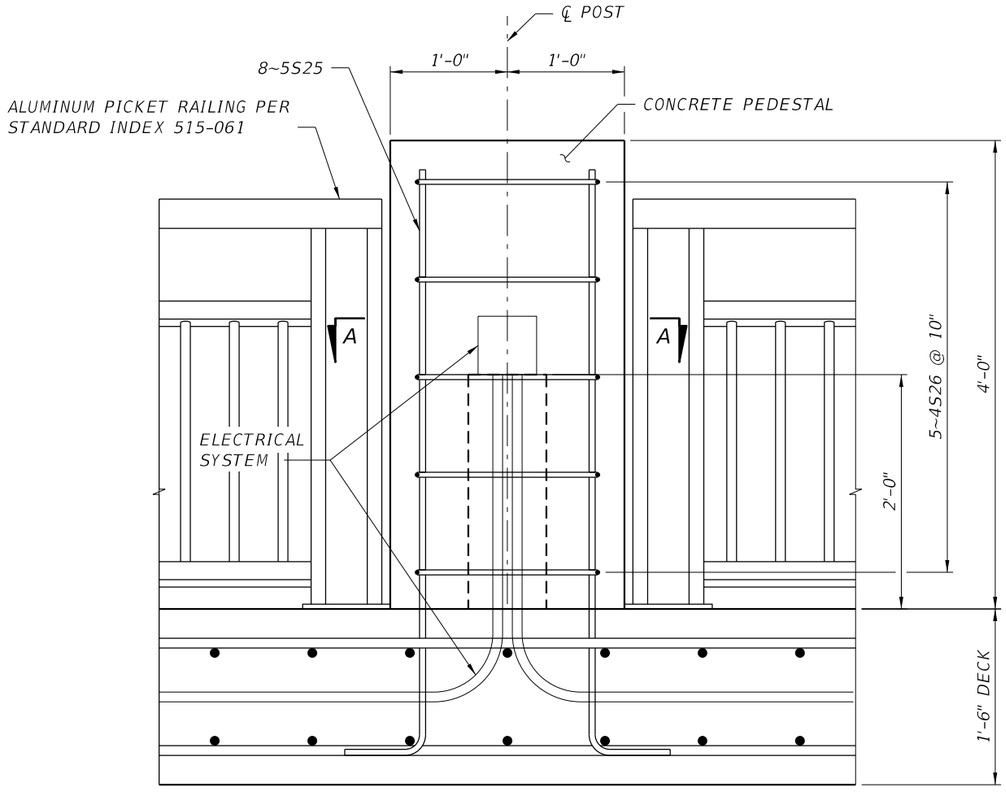

VIEW B-B

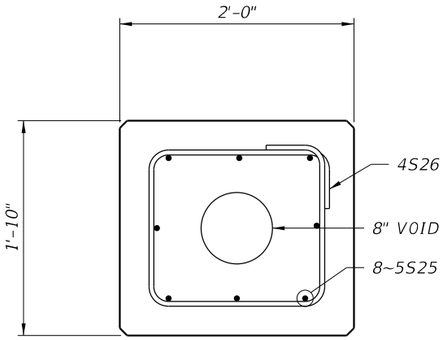

SECTION A-A

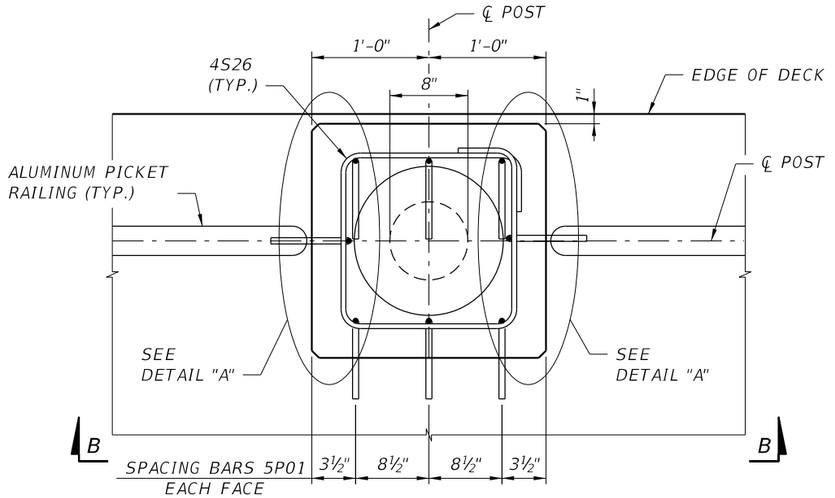

PLAN (CONCRETE POST)

3" CLEAR COVER UNLESS NOTED OTHERWISE)

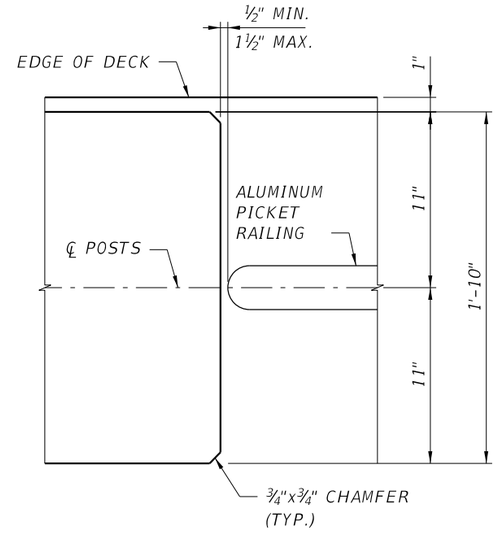

DETAIL A

CONCRETE POST LOCATIONS	
STATION	OFFSET
427+08.12	2.75' RT
427+47.06	2.75' RT
427+85.91	2.75' RT
428+71.71	2.75' RT
429+13.50	2.75' RT
429+52.91	2.75' RT
430+21.05	2.75' RT
430+61.50	2.75' RT
431+06.34	8.19' RT
431+74.19	3.17' RT

ADA ACCESSIBLE RAILING LOCATIONS*		
STATION	LEFT OFFSET (FT.)	RIGHT OFFSET (FT.)
429+07.50	7.125	7.125
428+84.00	7.125	7.125
428+60.50	7.125	7.125
428+37.00	16.000	N/A
428+27.00	24.875	N/A
428+17.00	16.000	N/A
427+93.50	7.125	7.125
427+70.00	7.125	7.125
427+46.50	7.125	7.125
427+23.00	7.125	7.125
426+99.50	7.125	7.125
426+76.00	16.000	N/A
426+66.00	24.875	7.125
426+56.00	8.875	N/A

*APPROXIMATE STATION LOCATION GIVEN TO THE CENTER OF THE 7'-3" PANEL. OFFSETS TO THE ℄ OF FISHING PIER

NOTES:

1. PROVIDE MITER AT ALL RAILING CORNERS.
2. FOR SUPERSTRUCTURE STEEL, SEE FISHING PIER SUPERSTRUCTURE DETAIL SHEETS.

BRIDGE NO. 124143

REVISIONS					
DATE	BY	DESCRIPTION	DATE	BY	DESCRIPTION

Kisinger Campo & Associates Corp.
201 N. Franklin Street
Suite 400
Tampa, FL 33602
Alfredo Jose Layrisse, PE No. 75610

DRAWN BY: JBH 05-21
CHECKED BY: JHJ 12-21
DESIGNED BY: TGL 05-21
CHECKED BY: SKB 12-21

LEE COUNTY PUBLIC WORKS
DEPARTMENT OF TRANSPORTATION

ROAD NO.	COUNTY	COUNTY PROJECT No
CR 865	LEE	CN160002

SHEET TITLE: FISHING PIER POST DETAILS

REF. DWG. NO.:

PROJECT NAME: ESTERO BLVD. (CR 865) OVER BIG CARLOS PASS

SHEET NO.: B2-17

NOTICE: THE OFFICIAL RECORD OF THIS SHEET IS THE ELECTRONIC FILE DIGITALLY SIGNED AND SEALED UNDER RULE 61G15-23.004, F.A.C.

MARK SIZE	MARK DES	LENGTH FT	LENGTH IN	NO BARS	TYP BAR	STY A	STY G	B FT	B IN	B FR	C FT	C IN	C FR	D FT	D IN	D FR	E FT	E IN	E FR	F FT	F IN	F FR	H FT	H IN	H FR	J FT	J IN	J FR	K FT	K IN	K FR	N NO	Ø ANG
LOCATION	PIER 9 FOOTING																			NO. REQUIRED = 1													
6	F20	7	11	29	4	4	4	1	0		1	11	1/2																			
8	F21	11	10	29	10			6	4		5	6																				
8	F22	8	1	16	10			5	0		3	1																				
8	F23	18	0	12	1			18	0																							
4	F24	6	0	32	11			0	11	3/4	2	6		2	6																	
8	F25	9	9	2	10			6	3		3	6																				
8	F26	13	10	4	11			1	4		6	3		6	3																	
7	F27	8	0	12	1			8	0																							
4	F28	2	6	3	11			1	2		0	8		0	8																	
8	F29	8	6	2	1			8	6																							
8	F30	7	10	139	10			6	6		1	4																				
8	F31	17	10	12	10			16	6		1	4																				
8	F32	9	8	22	11			7	0		1	4		1	4																	
8	F33	23	8	12	11			21	0		1	4		1	4																	
8	F35	35	8	13	11			33	0		1	4		1	4																	
8	F36	12	8	14	11			10	0		1	4		1	4																	
8	F37	20	1	5	10			18	9		1	4																				
7	F38	35	4	4	11			33	0		1	2		1	2																	
7	F39	21	1	4	11			18	9		1	2		1	2																	
7	F40	23	4	4	11			21	0		1	2		1	2																	
7	F41	16	8	4	10			15	6		1	2																				
LOCATION	PIER 10 FOOTING & PIER 11 FOOTING																			NO. REQUIRED = 2													
6	F20	7	11	58	4	4	4	1	0		1	11	1/2																			
8	F21	11	10	58	10			6	4		5	6																				
8	F22	8	1	32	10			5	0		3	1																				
8	F23	18	0	24	1			18	0																							
4	F24	6	0	64	11			0	11	3/4	2	6		2	6																	
8	F25	9	9	4	10			6	3		3	6																				
8	F26	13	10	8	11			1	4		6	3		6	3																	
7	F27	8	5	24	1			8	5																							
4	F28	2	6	6	11			1	2		0	8		0	8																	
8	F29	8	5	4	1			8	5																							
8	F30	7	10	114	10			6	6		1	4																				
8	F31	11	8	12	1			11	8																							
8	F32	9	8	18	11			7	0		1	4		1	4																	
8	F33	23	8	12	11			21	0		1	4		1	4																	
8	F35	35	8	8	11			33	0		1	4		1	4																	
8	F36	12	8	14	11			10	0		1	4		1	4																	
8	F37	20	1	10	10			18	9		1	4																				
7	F39	21	1	8	11			18	9		1	2		1	2																	
7	F40	23	4	4	11			21	0		1	2		1	2																	
7	F42	9	8	4	1			9	8																							
LOCATION	DECK UNITS 1 & 2																			NO. REQUIRED = 2													
8	S01	145	6	16	41			60	0		25	5	1/2	60	0											3	6				2	
8	S02	149	7	58	41			60	0		29	6	1/4	60	0											3	6				2	
4	S03	15	9	244	1			15	9																							
5	S20	3	0	16	1			3	0																							
LOCATION	END BENTS UNITS 1 & 2																			NO. REQUIRED = 4													
4	S04	11	9	3	1			11	8	3/4																						
6	S05	10	5	29	25			2	3		2	8		2	3		1	0		3	6											
4	S06	6	4	32	11			0	11	3/4	2	8		2	8																	
5	S07	9	6	15	4	4	4	2	6		1	9																				
5	S08	11	9	17	1			11	8	3/4																						

BRIDGE NO. 124143

NOTICE: THE OFFICIAL RECORD OF THIS SHEET IS THE ELECTRONIC FILE DIGITALLY SIGNED AND SEALED UNDER RULE 61G15-23.004, F.A.C.

REVISIONS

DATE	BY	DESCRIPTION	DATE	BY	DESCRIPTION

Kisinger Campo & Associates Corp.
201 N. Franklin Street
Suite 400
Tampa, FL 33602
Alfredo Jose Layrisse, PE No. 75610

DRAWN BY: JHJ 10-21
CHECKED BY: UYC 12-21
DESIGNED BY: JHJ 10-21
CHECKED BY: UYC 12-21

LEE COUNTY PUBLIC WORKS
DEPARTMENT OF TRANSPORTATION

ROAD NO.	COUNTY	COUNTY PROJECT No
CR 865	LEE	CN160002

SHEET TITLE: FISHING PIER REINFORCING BAR LIST (1 OF 2)

REF. DWG. NO.:

PROJECT NAME: ESTERO BLVD. (CR 865) OVER BIG CARLOS PASS

SHEET NO.: B2-18

MARK		LENGTH	NO	TYP	STY		B	C	D	E	F	H	J	K	N	Ø
SIZE	DES	FT IN	BARS	BAR	A	G	FT IN FR	FT IN FR	FT IN FR	FT IN FR	FT IN FR	FT IN FR	FT IN FR	FT IN FR	NO	ANG
LOCATION INTERMEDIATE BENTS UNITS 1 & 2											NO. REQUIRED = 6					
8	S09	17- 7	5	18	1	1	15- 9									
8	S10	18- 5	4	11			15- 9	1- 4	1- 4							
8	S11	6- 2	4	11			3- 6	1- 4	1- 4							
5	S12	13- 0	12	4	4	4	2- 6	3- 6								
5	S13	9- 6	10	13			3- 6	3- 0	3- 0						45	45
5	S14	9- 6	9	5			2- 6	3- 6	0- 6	0- 6						
5	S15	3- 6	18	12			3- 0	0- 6								45
4	S16	15- 9	8	1			15- 9									
10	S17	6- 3	12	10			4- 5	1-10								
LOCATION LIGHT POLE PEDESTAL											NO. REQUIRED = 8					
5	S25	5-10	8	10			5- 0	0-10								
4	S26	4- 2	5	4	4	4	1- 4	1- 6								
LOCATION DECK UNIT 3											NO. REQUIRED = 1					
8	S01	60- 0	16	1			60- 0									
8	S02	60- 0	58	1			60- 0									
4	S03	15- 9	106	1			15- 9									
5	S20	3- 0	8	1			3- 0									
8	S21	10- 2	29	12			3- 2	7- 0								5
8	S22	10- 0	29	1			10- 0									
8	S23	8- 4	8	12			1- 4	7- 0								5
8	S24	8- 0	8	1			7-11 3/4									
LOCATION END BENT 3-1											NO. REQUIRED = 1					
4	S04	11- 9	3	1			11- 8 3/4									
6	S05	10- 5	29	25			2- 3	2- 8	2- 3	1- 0	3- 6					
4	S06	6- 4	32	11			0-11 3/4	2- 8	2- 8							
5	S07	9- 6	15	4	4	4	2- 6	1- 9								
5	S08	11- 9	17	1			11- 8 3/4									
LOCATION INTERMEDIATE BENT 3-2											NO. REQUIRED = 1					
8	S09	17- 7	5	18	1	1	15- 9									
8	S10	18- 5	4	11			15- 9	1- 4	1- 4							
8	S11	6- 2	4	11			3- 6	1- 4	1- 4							
5	S12	13- 0	12	4	4	4	2- 6	3- 6								
5	S13	9- 6	10	13			3- 6	3- 0	3- 0						45	45
5	S14	9- 6	9	5			2- 6	3- 6	0- 6	0- 6						
5	S15	3- 6	18	12			3- 0	0- 6								45
4	S16	15- 9	8	1			15- 9									
10	S17	6- 3	6	12			4- 5	1-10								85
10	S18	6- 3	6	14			4- 5	1-10								85
LOCATION END BENT 3-3											NO. REQUIRED = 1					
8	S09	17- 7	5	18	1	1	15- 9									
8	S10	18- 5	4	11			15- 9	1- 4	1- 4							
8	S11	6- 2	4	11			3- 6	1- 4	1- 4							
5	S12	13- 0	12	4	4	4	2- 6	3- 6								
5	S13	6- 6	10	12			3- 6	3- 0								45
5	S14	9- 4	9	5			2- 5	3- 6	0- 6	0- 6						
5	S15	3- 6	9	12			3- 0	0- 6								45
4	S16	15- 9	7	1			15- 9									
10	S17	6- 3	12	12			4- 5	1-10								45
END OF LIST																

BRIDGE NO. 124143

NOTICE: THE OFFICIAL RECORD OF THIS SHEET IS THE ELECTRONIC FILE DIGITALLY SIGNED AND SEALED UNDER RULE 61G15-23.004, F.A.C.

REVISIONS

DATE	BY	DESCRIPTION	DATE	BY	DESCRIPTION

Kisinger Campo & Associates Corp.
201 N. Franklin Street
Suite 400
Tampa, FL 33602
Alfredo Jose Layrisse, PE No. 75610

DRAWN BY: JHJ 10-21
CHECKED BY: UYC 12-21
DESIGNED BY: JHJ 10-21
CHECKED BY: UYC 12-21

LEE COUNTY PUBLIC WORKS
DEPARTMENT OF TRANSPORTATION

ROAD NO.	COUNTY	COUNTY PROJECT No
CR 865	LEE	CN160002

SHEET TITLE: FISHING PIER REINFORCING BAR LIST (2 OF 2)

REF. DWG. NO.

PROJECT NAME: ESTERO BLVD. (CR 865) OVER BIG CARLOS PASS

SHEET NO. B2-19

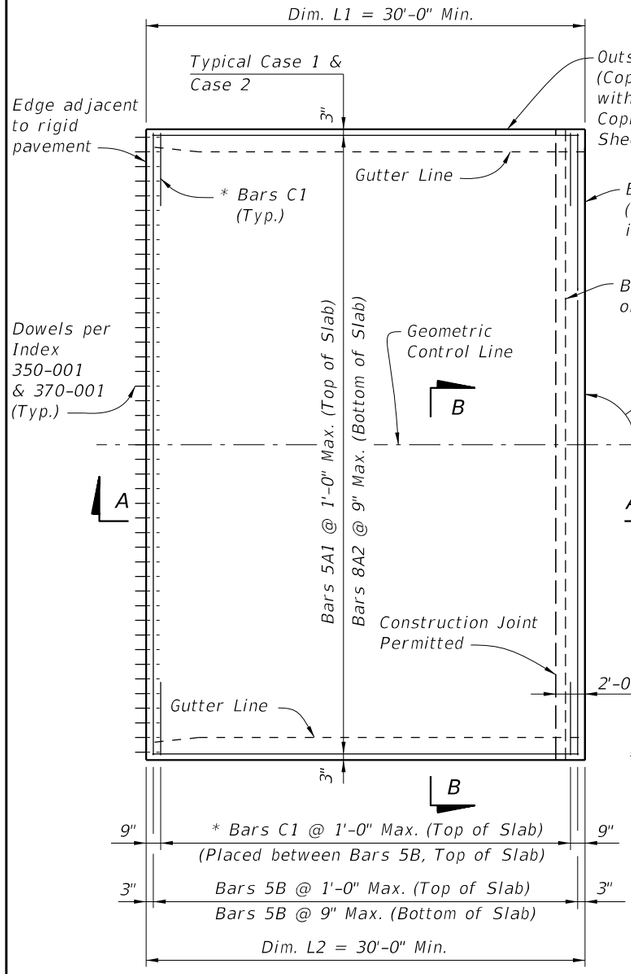

* NOTE: Bars C1 are required as shown when the 36" or 42" Single-Slope Traffic Railings, or the Traffic Railing/Noise Wall, are used at the edge of the Approach Slab.

PLAN VIEW (CASE 1)

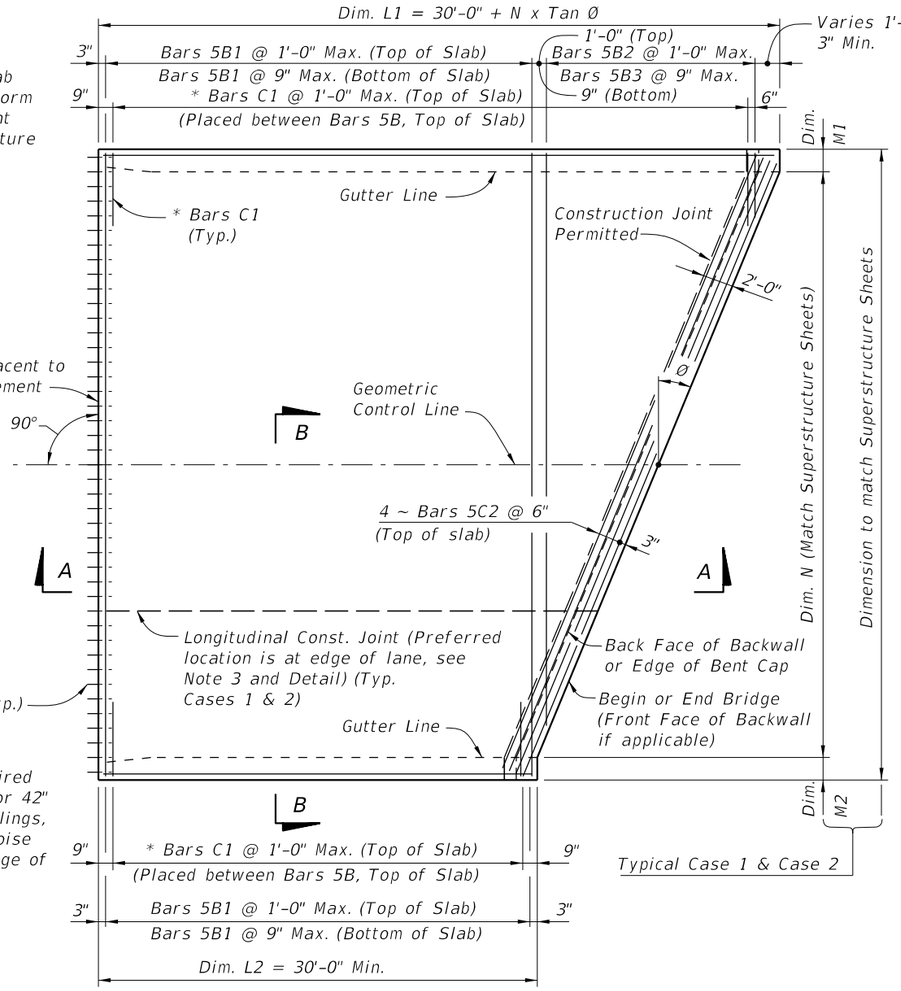

PLAN VIEW (CASE 2)

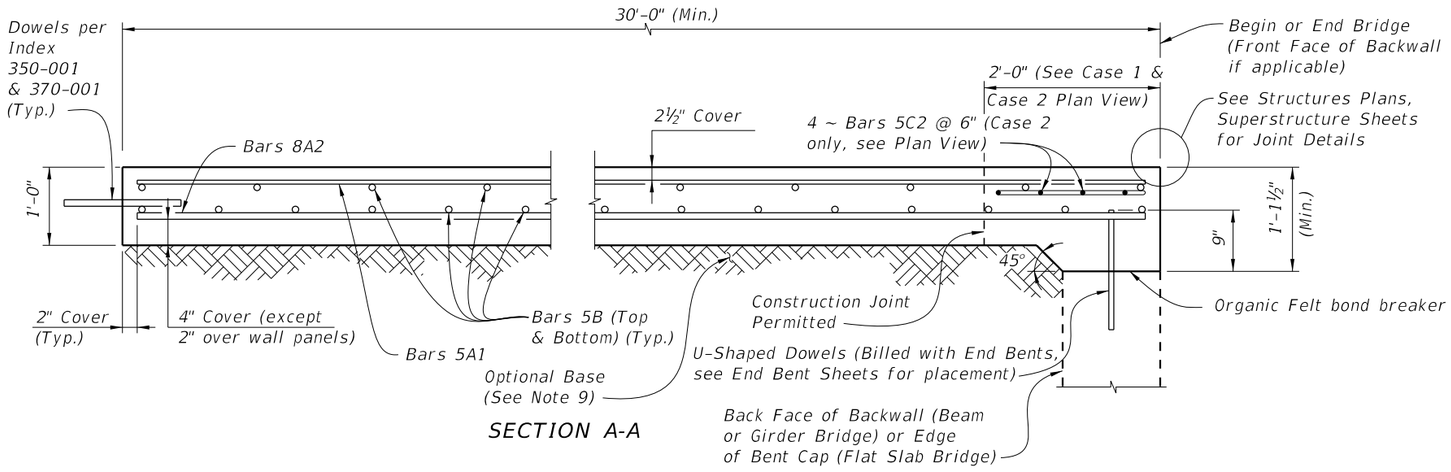

SECTION A-A

GENERAL NOTES

1. SURFACE TREATMENT: Apply a Class 4 Floor Finish (Grooved) to the riding surface from begin or end approach slab joint to begin or end bridge. See Bid Item Notes. Apply a broomed finish to sidewalk areas.
2. CONDUIT: If required, see Structures Plans for Conduit details.
3. When a longitudinal construction joint is necessary or allowed by the Engineer, the transverse steel shall be extended as shown in the Longitudinal Construction Joint Detail.
4. The plan view for CASE 1 applies when the skew angle (Ø) = 0°. Relevant details also apply to CASE 2.
5. The plan view for CASE 2 applies where the skew angle (Ø) is > 0°. The slab shown represents a skew to the right for an approach slab at begin bridge; approach slab at the end of bridge or a left skew shall be treated similarly. The shown reinforcement shall be utilized, and Dowels provided in accordance with Index 350-001 and 370-001.
6. Deformed WWR must meet the requirements of Specification Section 931.
7. PROFILOGRAPH: If profilograph requirements apply, planing may be required. The permitted construction joint shown in Section A-A will facilitate the placement of the expansion joint.
8. Approach slabs shown in Plan View Cases 1 and 2 represent a typical approach slab with edge barriers and no sidewalks. Provide railings, parapets, traffic separators and sidewalks as detailed on the additional approach slab sheets.
9. PAYMENT: Deformed WWR for the edge of Approach Slabs on retaining walls is not included in the estimated quantity for reinforcing steel and is considered incidental to the work. See Roadway Plans for Optional Base details and quantities.

CROSS REFERENCES:

For Section B-B, Longitudinal Construction Joint Detail and Approach Slab Details see Sheet 2.

9/23/2021 8:04:23 AM

LAST REVISION	REVISION	DESCRIPTION:	FDOT	FY 2022-23 STANDARD PLANS	APPROACH SLABS (30 FT.) (RIGID PAVEMENT APPROACHES)	INDEX	SHEET
11/01/17						400-091	1 of 2

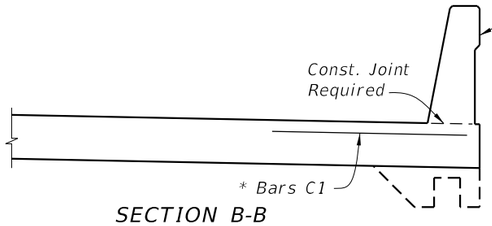

NOTE:
Geometry of Traffic Railings, Pedestrian/Bicycle Railings, Traffic Separators and Sidewalks to match those on adjoining bridge.

SECTION B-B
STANDARD APPROACH SLAB

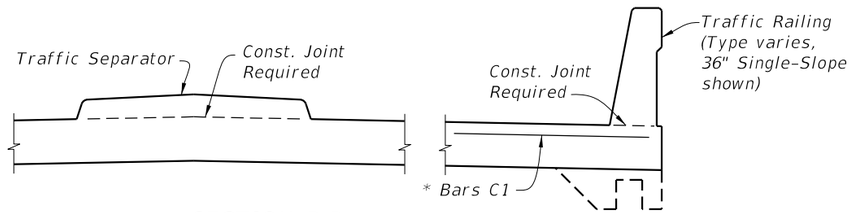

SECTION B-B
APPROACH SLAB WITH TRAFFIC SEPARATOR

*NOTE: Bars C1 are required as shown when the 36" or 42" Single-Slope Traffic Railing, or the Traffic Railing/Noise Wall, are used at the edge of the Approach Slab.

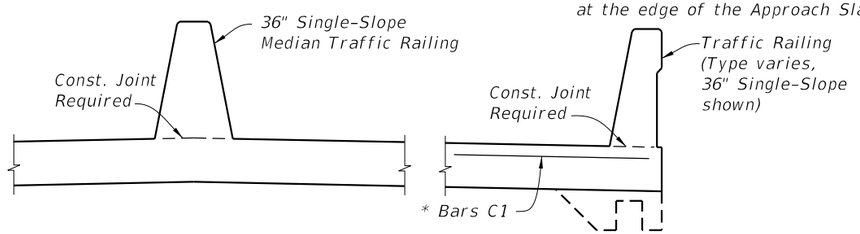

SECTION B-B
APPROACH SLAB WITH MEDIAN TRAFFIC RAILING

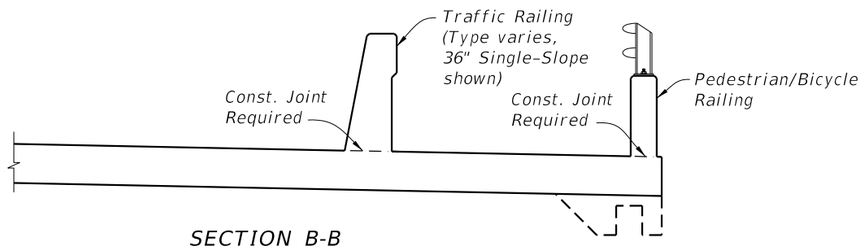

SECTION B-B
APPROACH SLAB WITH SIDEWALK

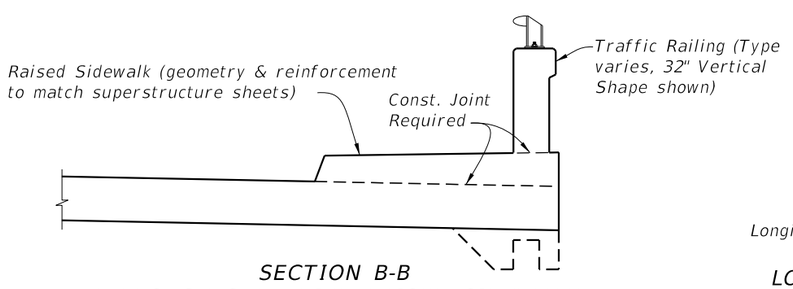

SECTION B-B
APPROACH SLAB WITH RAISED SIDEWALK

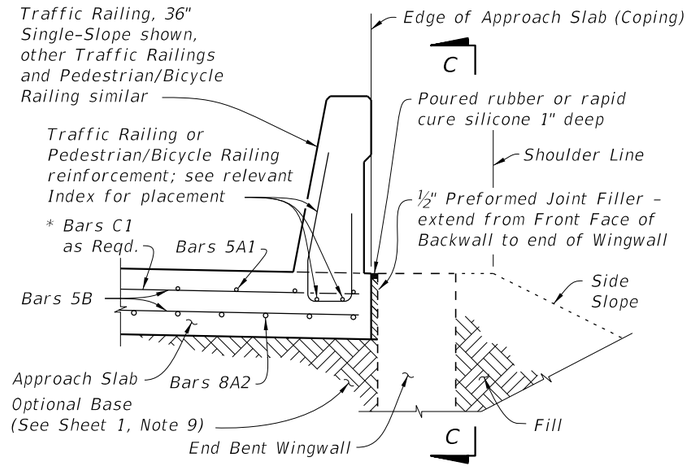

SECTION THRU APPROACH SLAB
AND END BENT WINGWALL

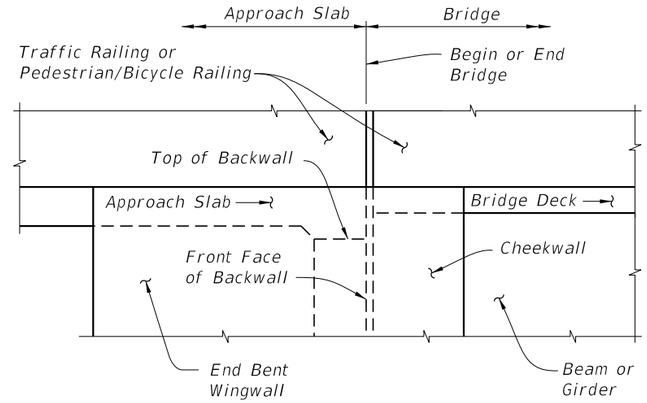

VIEW C-C AT BEGIN OR END BRIDGE (BEAM
BRIDGE SHOWN, FLAT SLAB BRIDGE SIMILAR)

APPROACH SLAB WITH WINGWALL DETAILS

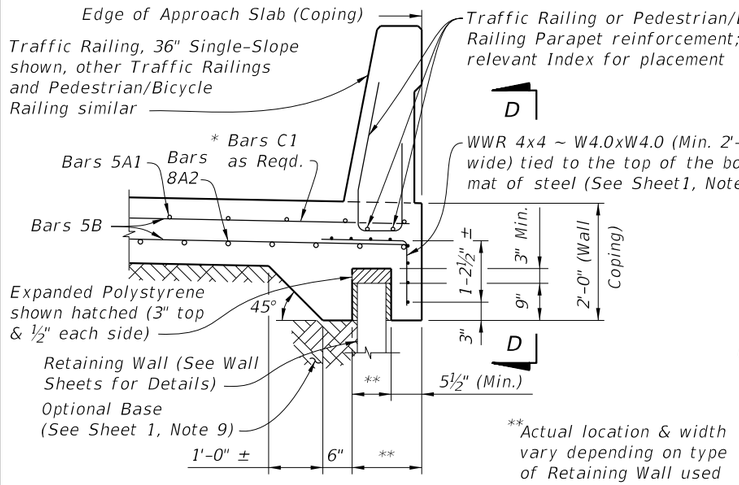

**Actual location & width vary depending on type of Retaining Wall used

SECTION THRU APPROACH SLAB
AND RETAINING WALL

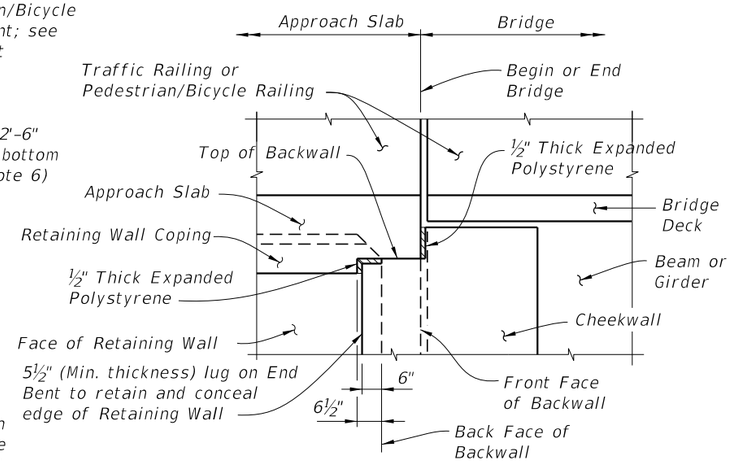

VIEW D-D AT BEGIN OR END BRIDGE (BEAM
BRIDGE SHOWN, FLAT SLAB BRIDGE SIMILAR)

APPROACH SLAB WITH RETAINING WALL DETAILS

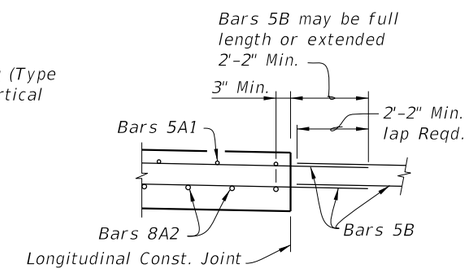

LONGITUDINAL CONSTRUCTION
JOINT DETAIL

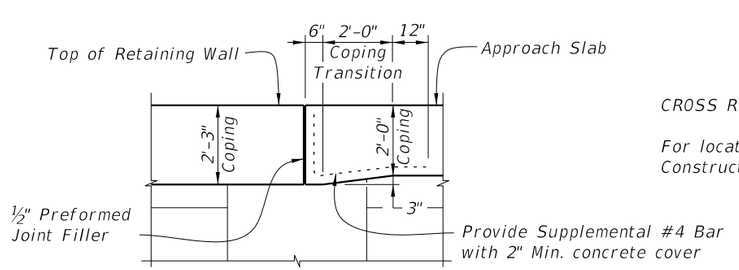

COPING TRANSITION DETAIL FOR
RETAINING WALLS WITH 2'-3" COPING HEIGHT
(Railing Not Shown For Clarity)

CROSS REFERENCES:

For location of Section B-B and Longitudinal Construction Joint see Sheet 1.

9/23/2021 8:04:24 AM

LAST REVISION	REVISION	DESCRIPTION:				
11/01/17			FDOT FY 2022-23 STANDARD PLANS	APPROACH SLABS (30 FT.) (RIGID PAVEMENT APPROACHES)	INDEX 400-091	SHEET 2 of 2

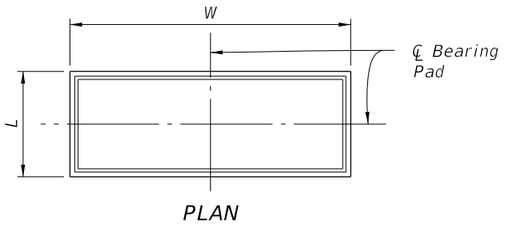

PLAN

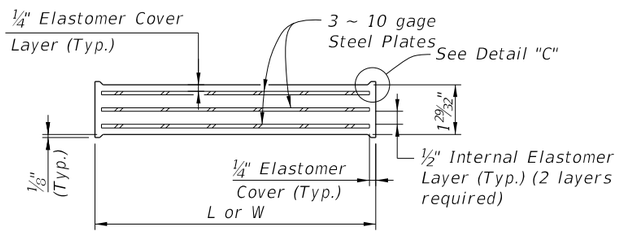

TYPICAL SECTION TYPE D, E & AA PAD

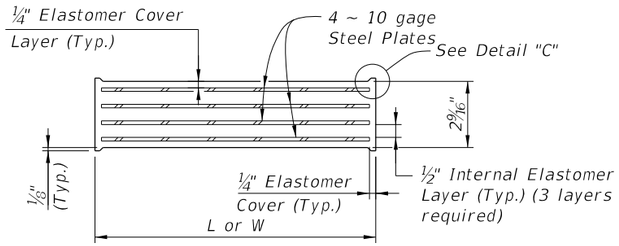

TYPICAL SECTION TYPE F, G & AB PAD

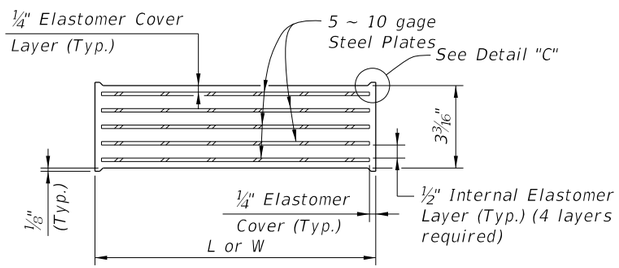

TYPICAL SECTION TYPE H PAD

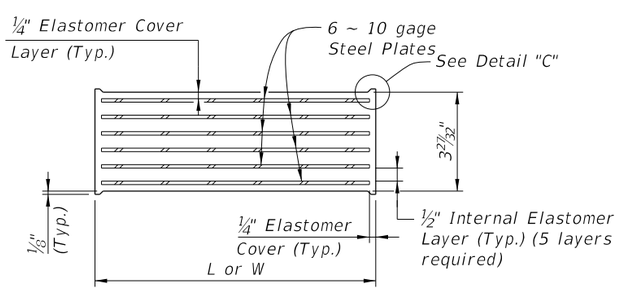

TYPICAL SECTION TYPE J & K PAD

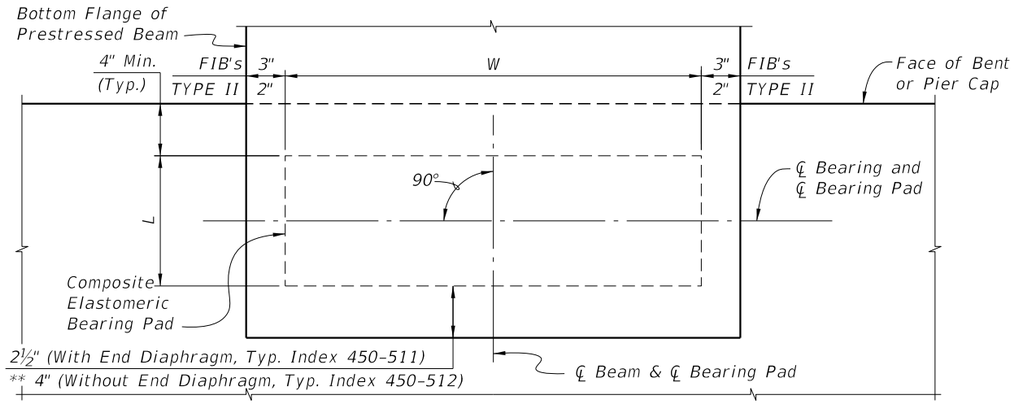

PARTIAL PLAN (Beam & Bearing Skew = 0°)

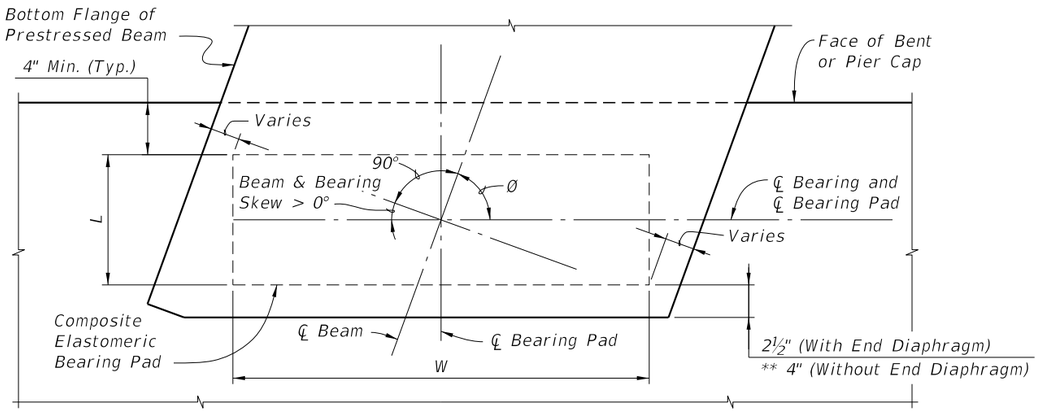

PARTIAL PLAN (Beam & Bearing Skew > 0°) (Use Index 450-511)

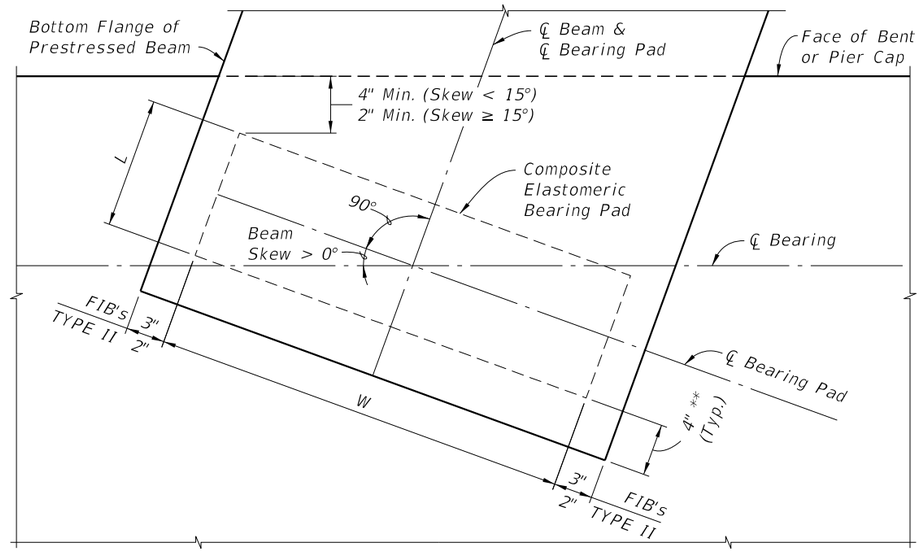

PARTIAL PLAN WITH SQUARED END BEAM (Use Index 450-512)
(Beam Skew > 0°; Bearing Skew = 0°)

	BEAM TYPE	BEARING PAD DIMENSIONS		*BEVELED BEARING PLATE DIMENSIONS	
PAD TYPE (See Note 1)		L	W	C	D
D (G=110psi)	FLORIDA I-BEAM	8"	2'-8"	1'-0"	3'-0"
E (G=110psi)		10"	2'-8"	1'-0"	3'-0"
F (G=110psi)		10"	2'-8"	1'-0"	3'-0"
G (G=150psi)		10"	2'-8"	1'-0"	3'-0"
H (G=150psi)		10"	2'-8"	1'-0"	3'-0"
J (G=150psi)		10"	2'-8"	1'-0"	3'-0"
K (G=150psi)		1'-0"	2'-8"	1'-1½"	3'-0"
AA (G=110psi)	AASHTO TYPE II	10"	1'-2"	1'-0"	1'-4"
AB (G=150psi)		10"	1'-2"	1'-0"	1'-4"

* Work this sheet with the appropriate type Bearing Plate Detail (See Bearing Plate Data Table) and BEARING PAD DATA TABLE in the Structures Plans. See TABLE OF BEAM VARIABLES and BEARING PLATE DATA TABLE in the Structures Plans for locations where beveled bearing plates are required.

** Offset to End of Beam is reduced to 2" for Type K Pad.

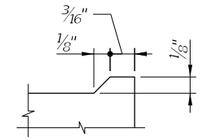

DETAIL "C"

BEARING PAD NOTES:

1. Neoprene in Type D, E, F & AA bearing pads shall have a shear modulus (G) of 110 psi. Neoprene in Type G, H, J, K & AB bearing pads shall have a shear modulus (G) of 150 psi.
2. Steel Plates in bearing pads shall conform to ASTM A1011 Grade 36, Type 1.
3. See Bearing Pad Data Table in Structures Plans for quantities of Type D, E, F, G, H, J, K, AA and/or AB Bearing Pads.

9/23/2021 8:07:34 AM

LAST REVISION	REVISION	DESCRIPTION:				
07/01/15			FDOT	FY 2022-23 STANDARD PLANS	COMPOSITE ELASTOMERIC BEARING PADS - PRESTRESSED FLORIDA-I & AASHTO TYPE II BEAM	INDEX 400-510 / SHEET 1 of 1

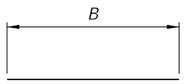

TYPE 1

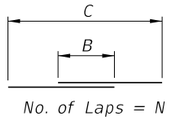

TYPE 2

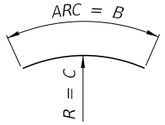

TYPE 3

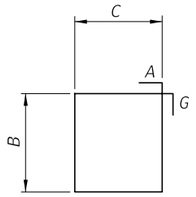

TYPE 4

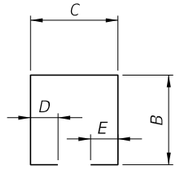

TYPE 5

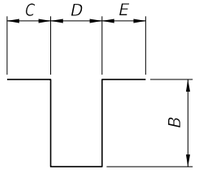

TYPE 6

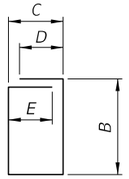

TYPE 7

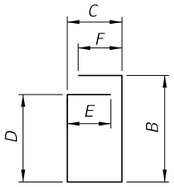

TYPE 8

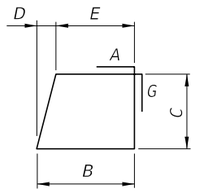

TYPE 9

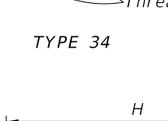

TYPE 10

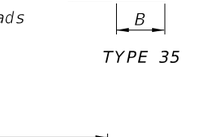

TYPE 1 1

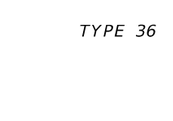

TYPE 12

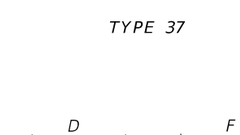

TYPE 13

TYPE 14

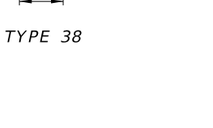

TYPE 15

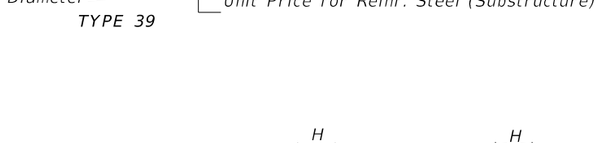

TYPE 16

Number of Beams or Walls = N
Number of D's = N–1
Number of B's = 2N–2
Number of C's = N–2
45° Typical



TYPE 17

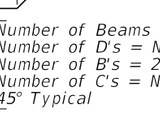

TYPE 18

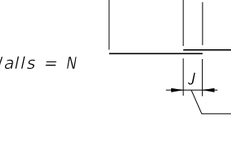

TYPE 19

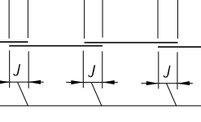

TYPE 20

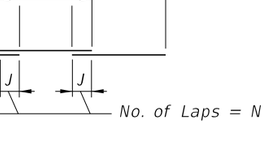

TYPE 21

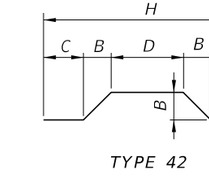

TYPE 22

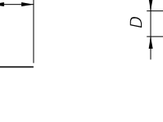

TYPE 23

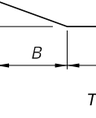

TYPE 24

TYPE 25

TYPE 26

TYPE 27

TYPE 28

TYPE 29

TYPE 30

TYPE 31

TYPE 32

Style 6 = No Hook

TYPE 33

TYPE 34

TYPE 35

TYPE 36

TYPE 37

TYPE 38

TYPE 39

C = Pitch
B = Overall Height
N = Total number of closed turns at Top and Bottom of columns

Splices may be accomplished by lapping 1.5 turns. Cost of Channel Spacers and Splices shall be included in the Contract Unit Price for Reinf. Steel (Substructure)

Number of Beams or Walls = N
Number of D's = N–1
Number of B's = 2N–1
Number of C's = N–1
45° Typical

TYPE 40

TYPE 41

TYPE 42

TYPE 43

HOOK DETAILS

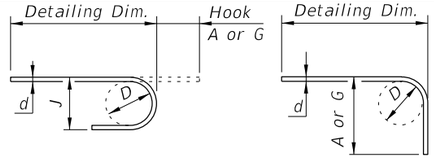

180° 90°

BAR SIZE	D	180° HOOKS A OR G	180° HOOKS J	90° HOOKS A OR G
#3	2¼"	5"	3"	6"
#4	3"	6"	4"	8"
#5	3¾"	7"	5"	10"
#6	4½"	8"	6"	1'-0"
#7	5¼"	10"	7"	1'-2"
#8	6"	11"	8"	1'-4"
#9	9½"	1'-3"	11¾"	1'-7"
#10	10¾"	1'-5"	1'-1¼"	1'-10"
#11	12"	1'-7"	1'-2¾"	2'-0"
#14	18¼"	2'-3"	1'-9¾"	2'-7"
#18	24"	3'-0"	2'-4½"	3'-5"
STYLE		1		3

90° 135°

STIRRUPS (TIES SIMILAR)

STIRRUP & TIE HOOK DIMENSIONS

BAR SIZE	D	90° HOOKS A or G	135° HOOKS A or G	135° HOOKS H *
#3	1½"	4"	4"	2½"
#4	2"	4½"	4½"	3"
#5	2½"	6"	5½"	3¾"
#6	4½"	1'-0"	8"	4½"
#7	5¼"	1'-2"	9"	5¼"
#8	6"	1'-4"	10½"	6"
STYLE		4	5	

STYLE 6 = NO HOOK

* Dimension is approximate.

Hook Styles Detailed on this sheet are for Illustration Only.

Actual Hook Style for any particular bar will be shown under A or G Heading on REINFORCING BAR LIST sheet(s) in Structures Plans.

All Dimensions are out-to-out.

NOTE: For Bar Dimensions See REINFORCING BAR LIST Sheet(s) in Structures Plans.

8:08:00 AM

9/23/2021

LAST REVISION	REVISION	DESCRIPTION:			
11/01/20			FY 2022-23 STANDARD PLANS	BAR BENDING DETAILS (STEEL)	INDEX 415-001 / SHEET 1 of 1

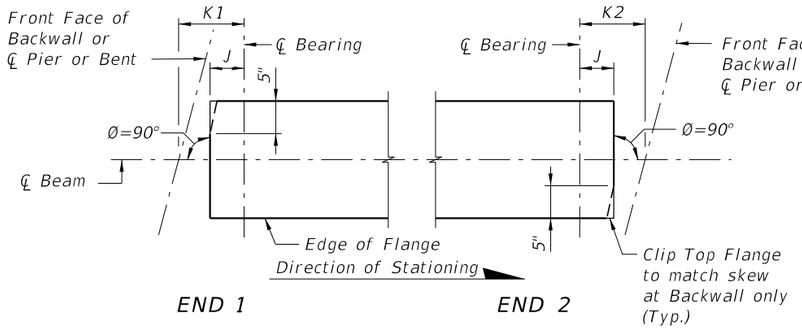

CASE 1
(Standard Orientation for New Construction)

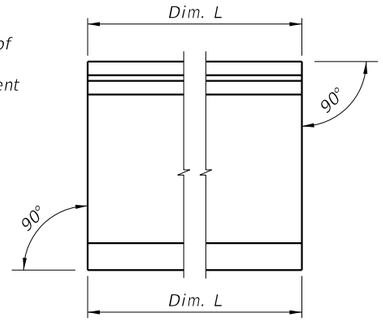

CONDITION 1
(Dim P = 0.0)

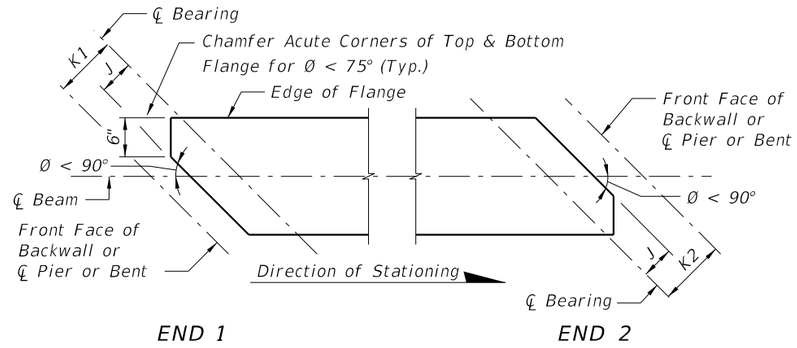

CASE 2
(Special Orientation for Widenings)

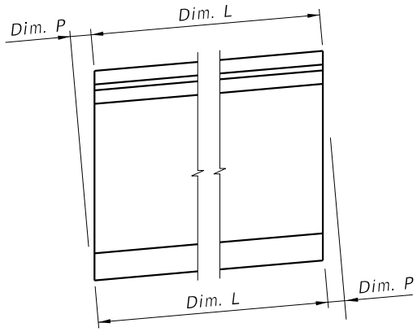

CONDITION 2

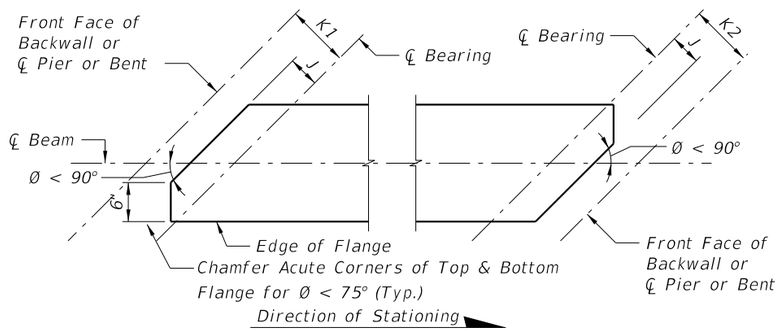

CASE 3
(Special Orientation for Widenings)

SCHEMATIC PLAN VIEWS AT BEAM ENDS

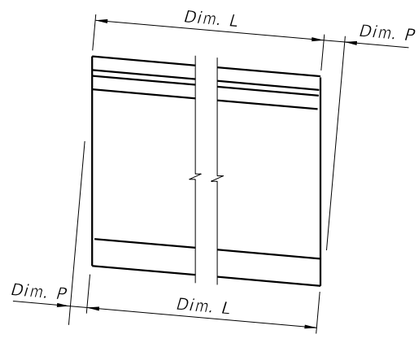

CONDITION 3

SCHEMATIC END ELEVATIONS OF BEAMS
(Showing Vertical Bevel of Beam End)

BEAM NOTES

1. Work this Index with the Florida-I Beam Standard Details (Index 450-036 thru 450-096) and the Table of Beam Variables in Structures Plans.
2. All bar bend dimensions are out-to-out.
3. Concrete cover: 2 inches minimum.
4. Stress Strands N to 10 kips each.
5. Place one (1) Bar 5K or 5Z at each location. Alternate the direction of the ends for each bar (see "ELEVATION AT END OF BEAM" in Standard Details.
6. Tie Bars 5K and 5Z to the fully bonded strands in the bottom or center row (see "STRAND PATTERN" on the Table of Beam Variables sheet in Structures Plans).
   A. At the Contractor's option, the length of the bottom legs of Bars 5K and 5Z may be extended to facilitate tying to the exterior strands.
   B. For deformed WWR, supplemental transverse #4 bars are permitted to support Pieces K & S under the cross wires on the bottom row of strands.
7. Place Bars 3C1, 3D1 and 4M1 in beam END 1, and Bars 3C2, 3D2 and 4M2 in beam END 2. END 1 and END 2 are shown on the Standard Details "ELEVATION".
8. For Beams with vertically beveled end conditions: Place first row of Bars 3C1, 3C2, 3D1, 3D2, 5K, 5Y and 5Z parallel to the end of the beam. Progressively rotate remaining bars within the limits of Bars 5Z until vertical by adjusting the spacing at the top of beam up to a maximum of 1". For deformed WWR, cut top cross wire and rotate bars as required or reduce end cover at top of the beam to 1" minimum.
9. For beams with skewed end conditions:
   A. Place end reinforcement parallel to the skewed end of the beam. End reinforcement is defined as Bars 3C1, 3C2, 3D1, 3D2, 5K, 4M1, 4M2, 5Y and 5Z placed within the limits of the spacing for Bars 3C in "ELEVATION AT END OF BEAM".
   B. Beyond the limits of the spacing for Bars 3C, place Bars 3D3, 5K and 4M3 perpendicular to the longitudinal axis of the beam. Fan Bars as needed to avoid overlapping bars at the transition to Bars 3D3 and 4M3, and field cut to maintain minimum cover. Provide additional Bars 4M1, 4M2, 3D1 and 3D2 as required; additional bars are not included in the "BILL OF REINFORCING STEEL". For placement locations see Skewed Beam End Details for Widening Existing Bridges.
   C. Adjust the dimensions of Bars 3C1, 3C2, 3D1, 3D2, 4M1 and 4M2 as shown on the Bending Diagram.
   D. WWR is not permitted for end reinforcement Bars 3D1, 3D2, 4M1 and 4M2; use bar reinforcement.
10. Contractor Options:
    A. Deformed WWR may be used in lieu of Bars 3D, 5K, 4M, and 5Z as shown on the Standard Details; except at skewed ends (see Note 9).
    B. Bars 3D1, 3D2 and 3D3 may be fabricated as a single bar with a 1'-0" minimum lap splice of the top legs, or the length of the bottom legs may be extended to facilitate tying to the exterior strands.
11. Embedment of Safety Line Anchorage Devices are permitted in the top flange to accommodate fall protection systems. See shop drawings for details and spacing of any required anchorage devices.
12. For beams with ends that will not be permanently encased in concrete diaphragms, cut wedges and recess Prestressing strands at the end of the beam without damaging the surrounding concrete. See "STRAND CUTTING AND PROTECTING DETAIL" on Sheet 2. Protect end of wedged recessed strands in accordance with Specification Section 450.
13. Holes in the beam web for temporary bracing or shipping devices must be formed prior to casting. Fill holes not meeting all the following criteria in accordance with Specification Section 450.
    A. The superstructure environmental classification is slightly or moderately aggressive
    B. Clear cover to adjacent steel reinforcing is 1"or greater
    C. Hole inside diameter is 2" maximum
    D. Non-metallic, non-water absorbing forming materials such as PVC, may be left in place permanently.

8:08:57 AM
9/23/2021

LAST REVISION	REVISION	DESCRIPTION:				
11/01/21			FDOT FY 2022-23 STANDARD PLANS	FLORIDA-I BEAM - TYPICAL DETAILS & NOTES	INDEX 450-010	SHEET 1 of 2

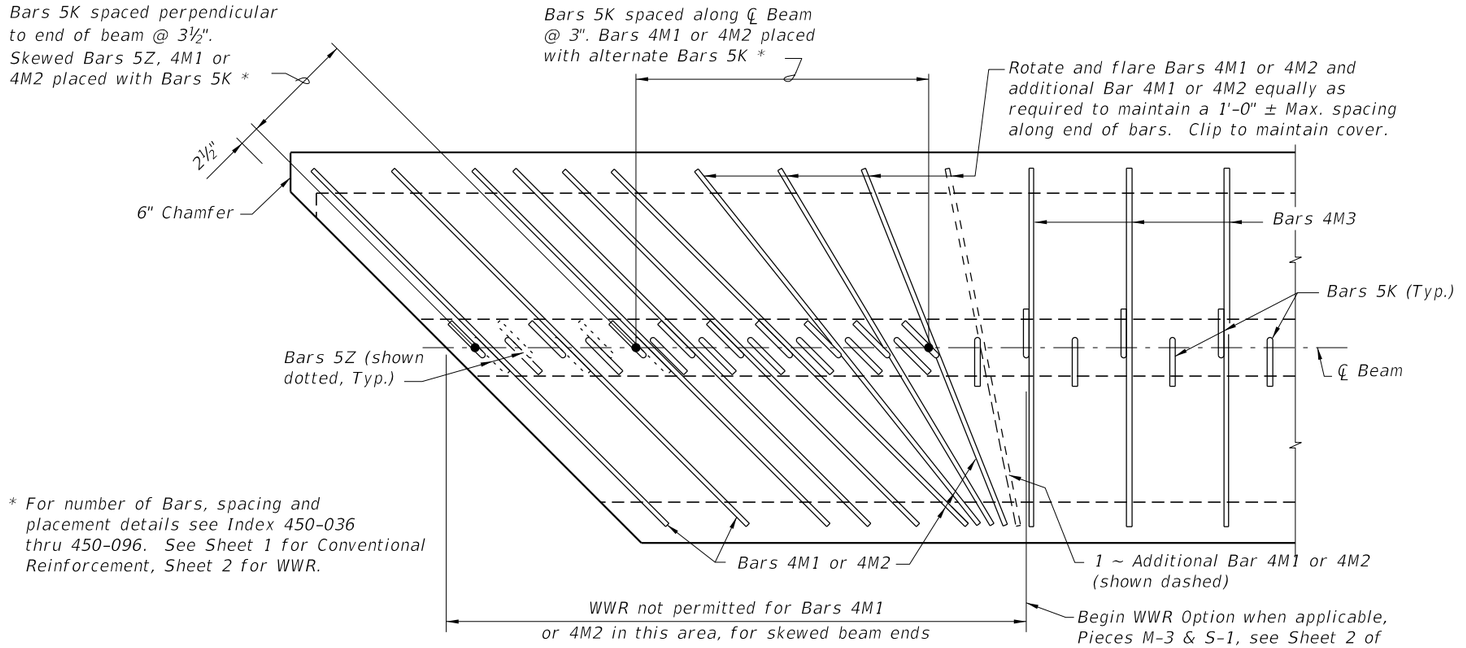

* For number of Bars, spacing and placement details see Index 450-036 thru 450-096. See Sheet 1 for Conventional Reinforcement, Sheet 2 for WWR.

PARTIAL PLAN VIEW (SHOWING TOP FLANGE)
(End 1 Shown, End 2 Similar)
(Bars 5A, 5Y & Strands N not shown for clarity)

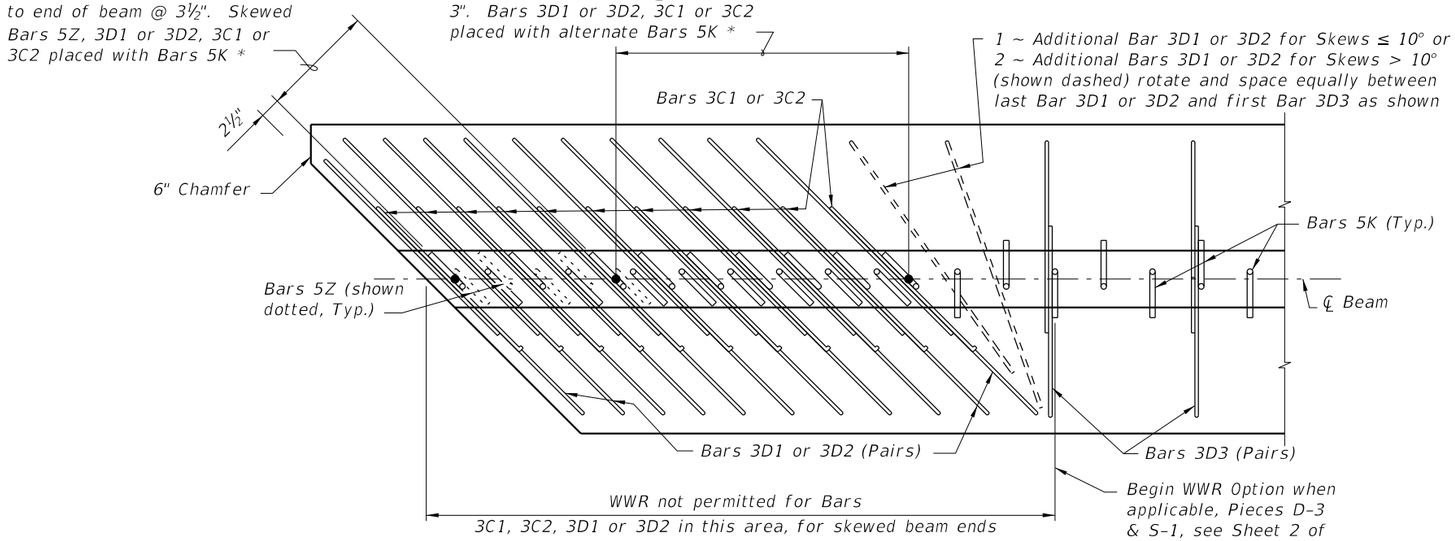

PARTIAL SECTION THRU WEB (SHOWING BOTTOM FLANGE)
(END 1 Shown, END 2 Similar)
(Bars 5Y, Strands, and Embedded Bearing Plate "A" not shown for clarity)

SKEWED BEAM END DETAILS FOR WIDENING EXISTING BRIDGES

(Florida-I 36 Beam shown, others similar)

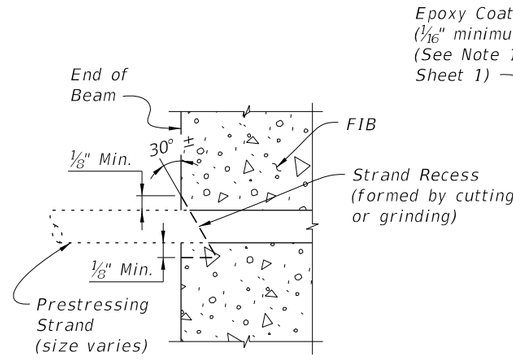

TYPICAL SECTION
SHOWING CUT STRAND RECESS LIMITS

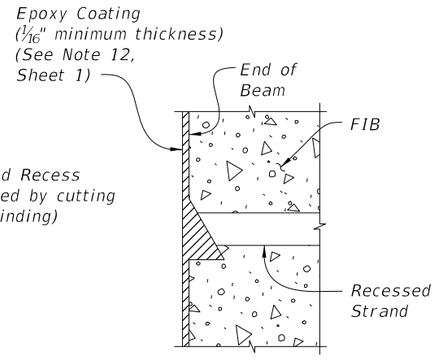

TYPICAL SECTION
AFTER PROTECTING

STRAND CUTTING AND PROTECTING DETAIL

9/23/2021 8:09:00 AM

LAST REVISION	REVISION	DESCRIPTION:	FDOT FY 2022-23 STANDARD PLANS	FLORIDA-I BEAM - TYPICAL DETAILS & NOTES	INDEX	SHEET
11/01/19					450-010	2 of 2

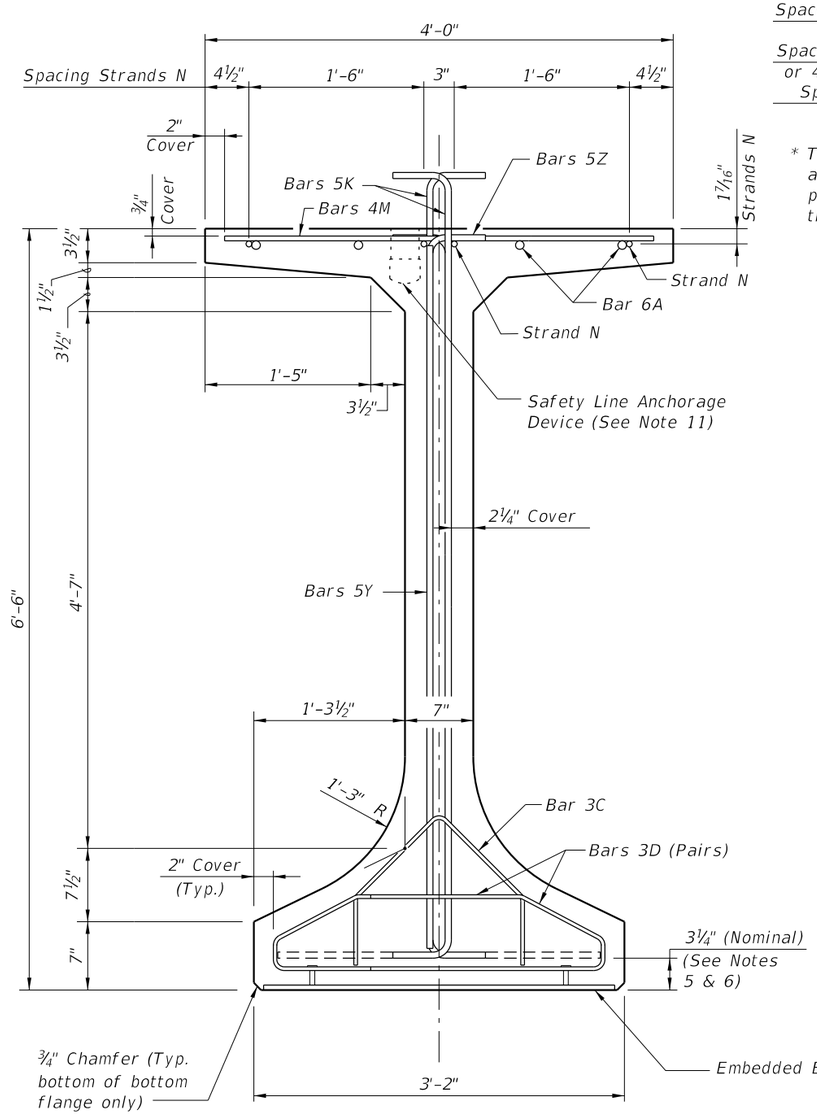

END VIEW

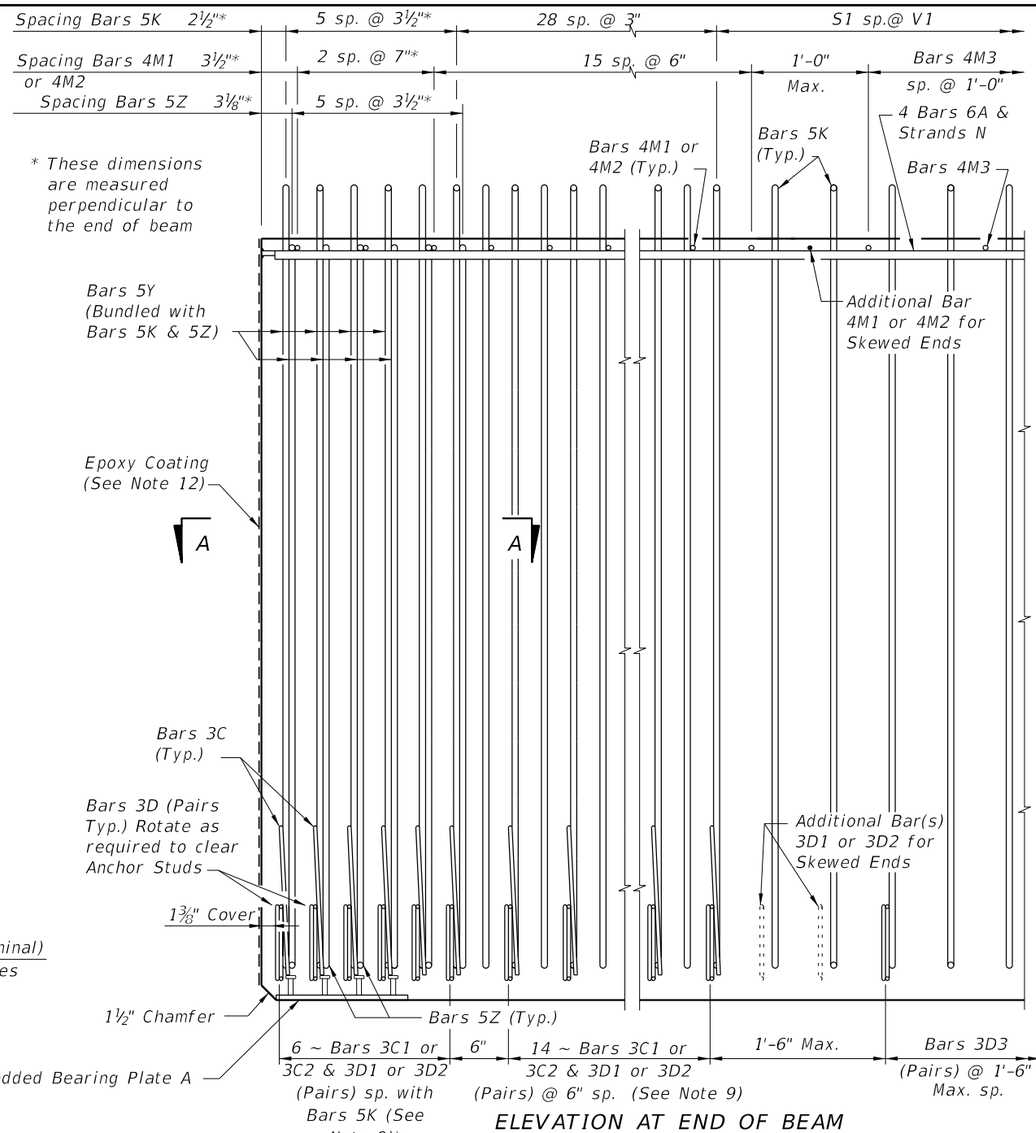

ELEVATION AT END OF BEAM
(Flanges Not Shown For Clarity)
(End 1 Shown, End 2 Similar)

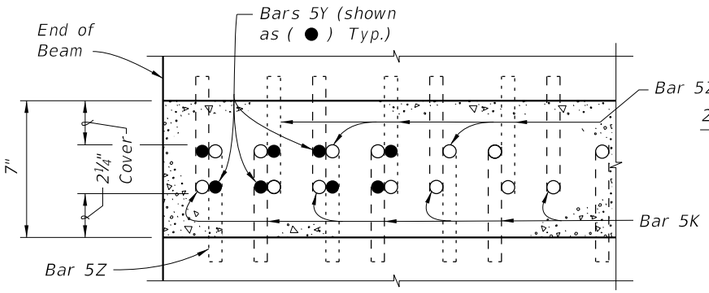

SECTION A-A FOR CONVENTIONAL REINFORCING
(Showing Bars 5K, 5Y & 5Z Only)

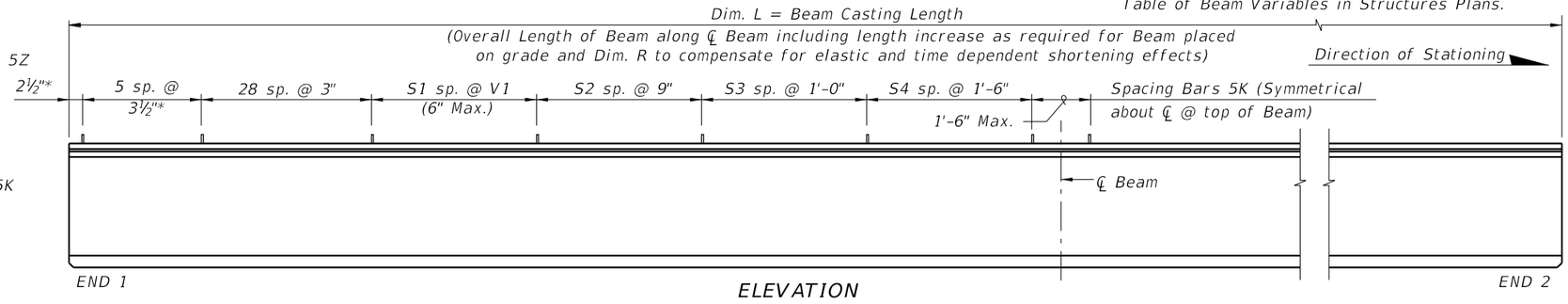

ELEVATION

CONVENTIONAL REINFORCING BAR BENDING DETAILS

BILL OF REINFORCING STEEL

MARK	NOTE NUMBERS	SIZE	NUMBER REQUIRED	LENGTH (NOTE 2)
A	—	6	8	28'-0"
C1	7, 8 & 9	3	20 (End 1)	Varies
C2	7, 8 & 9	3	20 (End 2)	Varies
D1	7, 8, 9 & 10	3	40 (End 1)	Varies
D2	7, 8, 9 & 10	3	40 (End 2)	Varies
D3	9 & 10	3	See Table	4'-3"
K	5, 6, 8, 9 & 10	5	See Table	7'-8"
M1	7 & 9	4	18 (End 1)	Varies
M2	7 & 9	4	18 (End 2)	Varies
M3	9	4	See Table	3'-8"
N	4 & 12	⅜" Ø Strand	4	Dim. L
Y	8 & 9	5	16	6'-0"
Z	5, 6, 8, 9 & 10	5	12	7'-2"

BENDING DIAGRAMS (See Note 2)

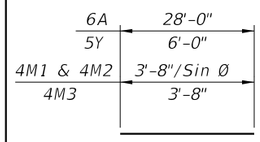

BARS 6A, 4M1, 4M2, 4M3 & 5Y

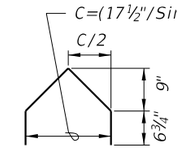

BARS 3C1 & 3C2

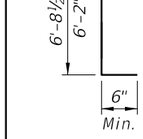

BARS 5K & 5Z

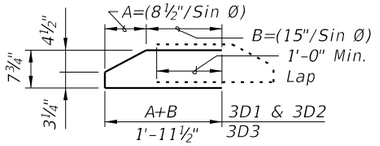

BARS 3D1, 3D2 & 3D3

NOTES:

A. Work this Index with Index 450-010 – Typical Florida-I Beam Details and Notes and the Florida-I Beam – Table of Beam Variables in Structures Plans.
B. For referenced notes, see Index 450-010.
C. For Dimensions A, B, C, D, L, R & V1 and number of spaces S1 thru S4, see Florida-I Beam – Table of Beam Variables in Structures Plans.

LAST REVISION	REVISION	DESCRIPTION:				
11/01/19			FDOT FY 2022-23 STANDARD PLANS	FLORIDA-I 78 BEAM - STANDARD DETAILS	INDEX 450-078	SHEET 1 of 2

9/23/2021 8:24:16 AM

ALTERNATE REINFORCING STEEL (WWR) DETAILS

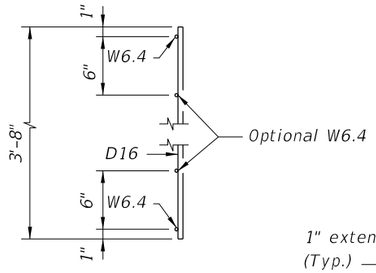

PIECES M
END VIEW

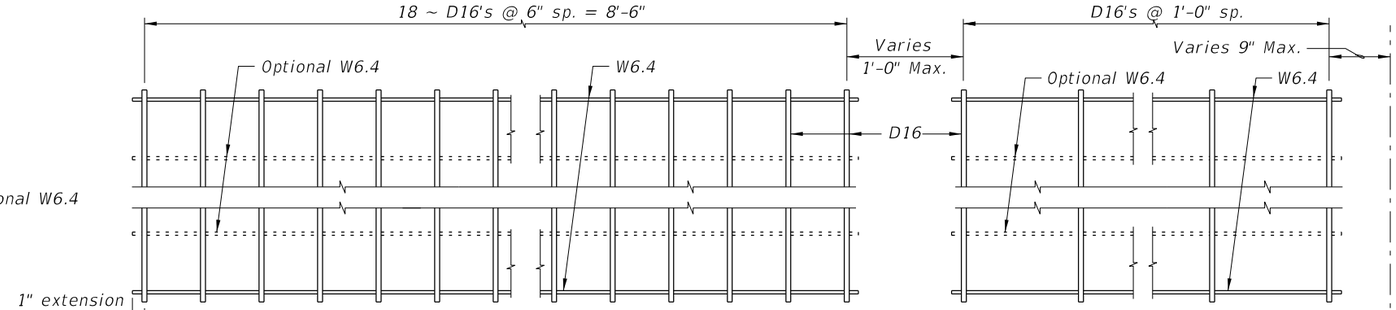

PLAN VIEW
PIECE M-1
(2 Required)

PLAN VIEW
PIECE M-3
(2 Required)

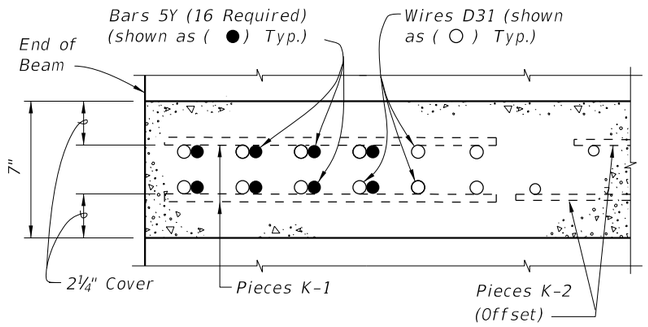

SECTION A-A
FOR WELDED WIRE REINFORCEMENT

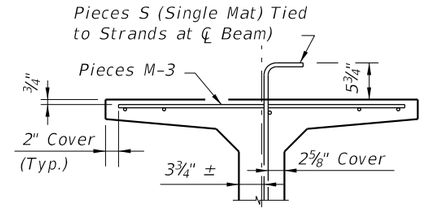

PARTIAL SECTION AT CENTER BEAM

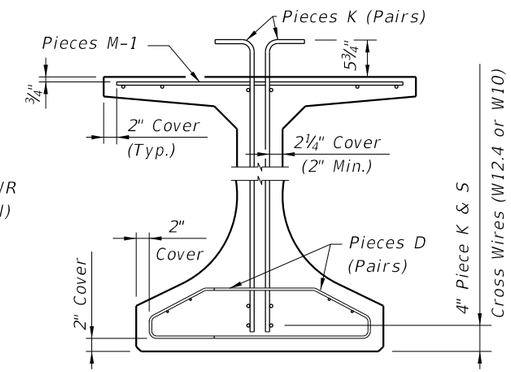

PARTIAL BEAM END VIEW
(Conventional Reinforcing Bars A, C, Y
and Strands N not Shown for Clarity)

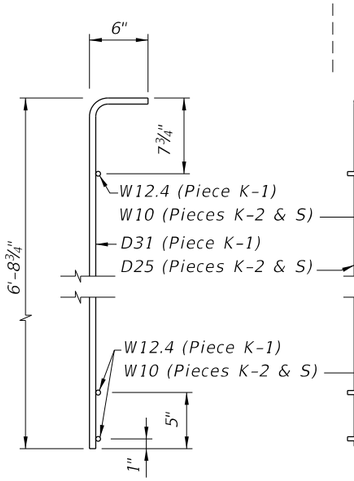

PIECES K & S
END VIEW

PIECE K-1
(Aligned EF)
(4 Required
~ 2 Pairs)

PIECE K-2
(FF Shown Solid, BF Shown Dashed)
(4 Required)

PIECE S-1, S-2, S-3 or S-4
(2 Required ~ Each Piece)

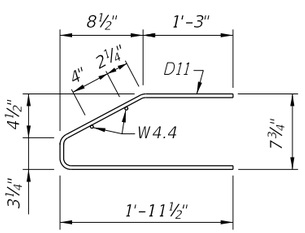

PIECES D
END VIEW

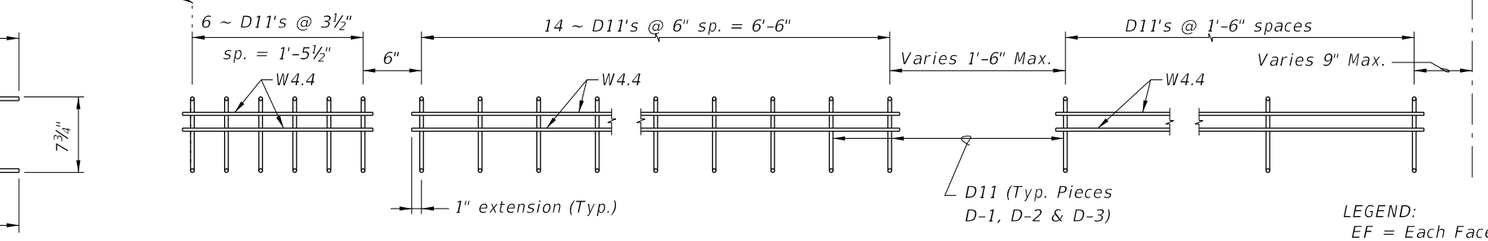

PIECE D-1
(4 Required ~ 2 Pairs)

PIECE D-2
(4 Required ~ 2 Pairs)

PIECE D-3
(4 Required ~ 2 Pairs)

LEGEND:
EF = Each Face
FF = Front Face
BF = Back Face

NOTES:

a. See Sheet 1 for placement details & Table of Beam Variables in Structures Plans for variables S1, S2, S3, S4 & V1.
b. Place Conventional Reinforcement Bars 6A & 3C as shown on Sheet 1. Place additional Bars 5Y as shown in Section A-A for WWR. Bars 5Z will not be used with the WWR Option.
c. Pieces may be fabricated in multiple length sections.
d. For beams with skewed end conditions, Pieces D-1, D-2 & M-1 shall not be used; Conventional Reinforcement Bars D1, D2, C1, C2, M1 & M2 shall be used. See Index 450-010 Skewed Beam End Details and Note 9 for placement details. Shift Pieces K & Bars 5Y to accommodate skewed end conditions and align with Bars C and D.

9/23/2021 8:24:19 AM

LAST REVISION	REVISION	DESCRIPTION:	FDOT FY 2022-23 STANDARD PLANS	FLORIDA-I 78 BEAM - STANDARD DETAILS	INDEX	SHEET
11/01/16					450-078	2 of 2

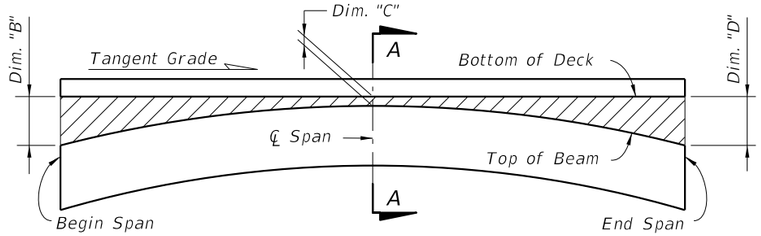

BUILD-UP DIAGRAM FOR TANGENT SPANS
(ALONG ℄ BEAM) (CASE 1)

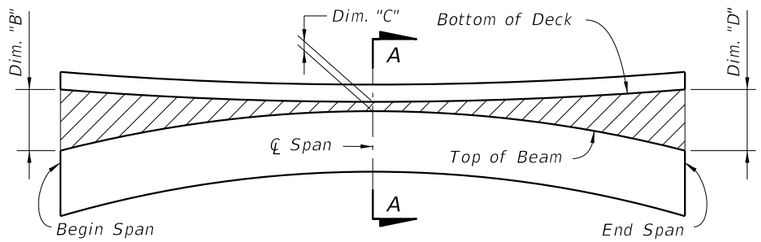

BUILD-UP DIAGRAM FOR SAG VERTICAL CURVE & HORIZONTAL CURVE SPANS
(ALONG ℄ BEAM) (CASE 2)

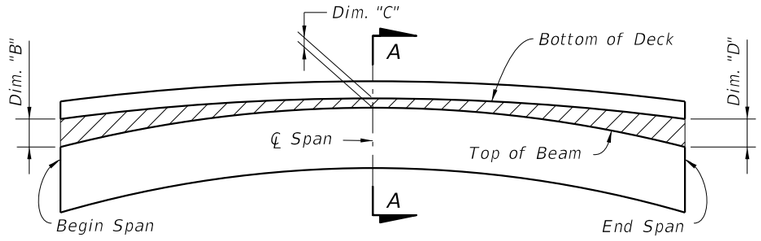

BUILD-UP DIAGRAM FOR CREST VERTICAL CURVE SPANS
- CONTROL AT ℄ SPAN
(ALONG ℄ BEAM) (CASE 3)

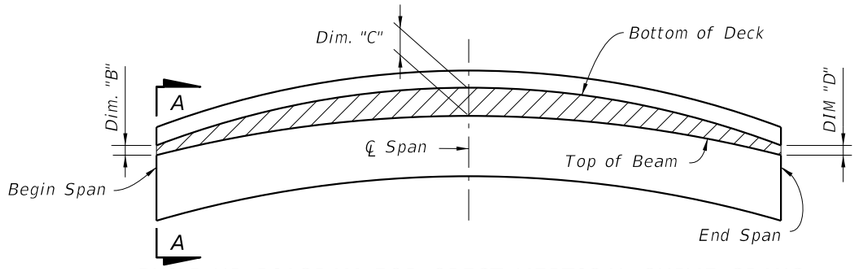

BUILD-UP DIAGRAM FOR CREST VERTICAL CURVE SPANS
- CONTROL AT BEGIN OR END SPAN
(ALONG ℄ BEAM) (CASE 4)

BEAM CAMBER AND BUILD-UP NOTES:

The build-up values given in the Data Table* are based on theoretical beam cambers. The Contractor shall monitor beam cambers for the purpose of predicting camber values at the time of the deck pour. If the predicted cambers based on field measurements differ more than +/- 1" from the theoretical "Net Beam Camber @ 120 Days" shown in the Data Table*, obtain approval from the Engineer to modify the build-up dimensions as required. When the measured beam cambers create a conflict with the bottom mat of deck steel, notify the Engineer a minimum of 21 days prior to casting.

Dim. "A" includes the weight of the Stay-In-Place Formwork.

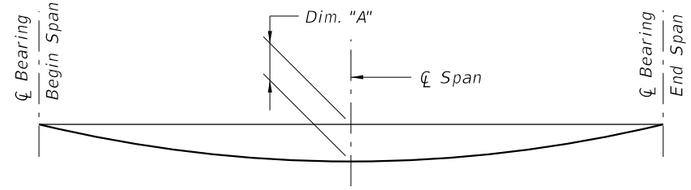

DEAD LOAD DEFLECTION DIAGRAM

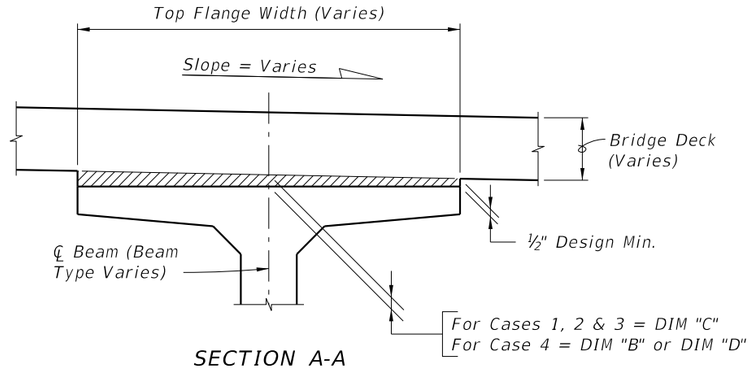

SECTION A-A
BUILD-UP OVER BEAMS
(Florida-I Beam Shown
AASHTO Type II Similar)

* NOTE:
Work this Index with the Build-up and Deflection Data Table for Florida-I and AASHTO Type II Beams in Structures Plans.

9/23/2021 8:26:50 AM

LAST REVISION	REVISION	DESCRIPTION:				
11/01/21			FDOT FY 2022-23 STANDARD PLANS	PRESTRESSED I-BEAMS BUILD-UP & DEFLECTION DATA	INDEX 450-199	SHEET 1 of 1

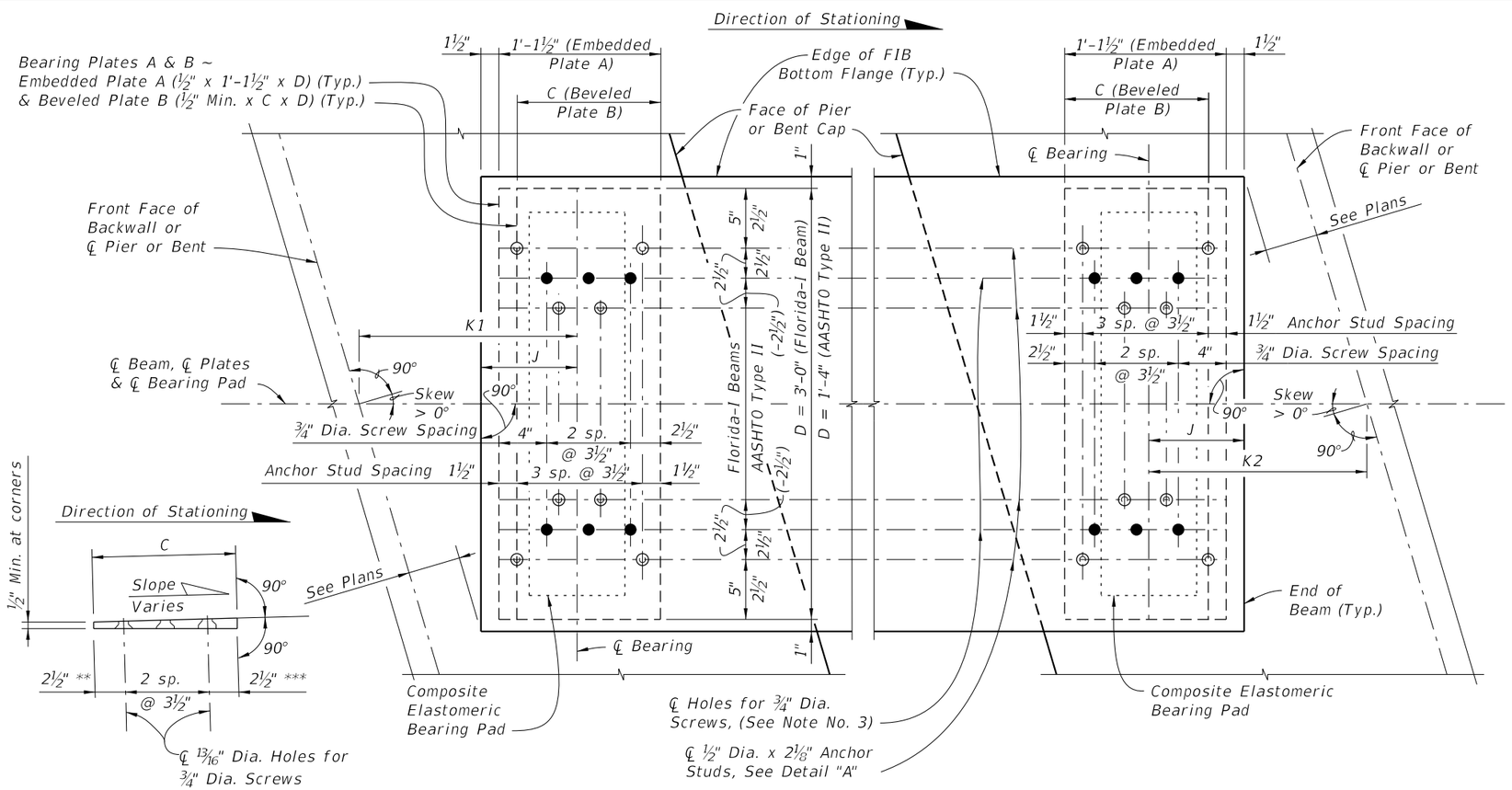

BEVELED BEARING PLATE B
(Along ℄ Beam)
(Positive Slope shown; Negative Slope similar)

PLAN
(FIB Skewed Alignment Shown, Skew = 0° and AASHTO Type II Similar)

NOTES:

1. *Work this sheet with Index 400-510 – Composite Elastomeric Bearing Pads, and 'BEARING PLATE DATA TABLE' in the Structures Plans.*
2. *Embedded Bearing Plates A are required for all Florida-I beams. Beveled Bearing Plates B with Embedded Bearing Plates A are required for beams as scheduled in the 'BEARING PLATE DATA TABLE' in the Structures Plans.*
3. *Bearing plate material shall conform to ASTM A36 or ASTM A709 (Grade 36 or 50). Headed Concrete Anchor Studs shall conform to Specification Section 502. Hot-dip galvanize Bearing Plates A & B after fabrication except that Galvanized Caps may be welded in place after hot-dip galvanizing. Drill Bearing Plates A and B as an assembled unit, thread Bearing Plate A only. Holes are not required in Plate A when Plate B is not required. Drill and thread holes perpendicular to Embedded Plate A and prior to plates being galvanized (ASTM A 123).*
4. *Provide Electroplated, Flat Head Cap Screws in accordance with ASTM F 835. Electroplating shall be ASTM B633, SC 2, Type 1. Provide screws long enough to maintain a ¾" minimum embedment into Embedded Bearing Plate A and Galvanized Cap. Provide steel Galvanized Caps with ½" Min. to 1½" Max. height and nominal 1" inside diameter.*
5. *Include the cost of Bearing Plates in the pay item for Prestressed Beams.*
6. *For Pad Type and Dimension C, see the 'BEARING PLATE DATA TABLE' in the Structures Plans. For Dimensions J, K1 and K2, see 'TABLE OF BEAM VARIABLES' in the Structures Plans.*
7. *All details and dimensions shown are along ℄ Beam. Positive Slope shown, Negative Slope similar.*
8. *Slope is determined along ℄ Beam at ℄ Bearing. See 'BEARING PLATE DATA TABLE' in the Structures Plans for Slope.*

CROSS REFERENCE:
See Sheet 2 for Detail "A"

LEGEND:

* ½" for Pad Type K
** 4" for Pad Type K at End 1
*** 4" for Pad Type K at End 2

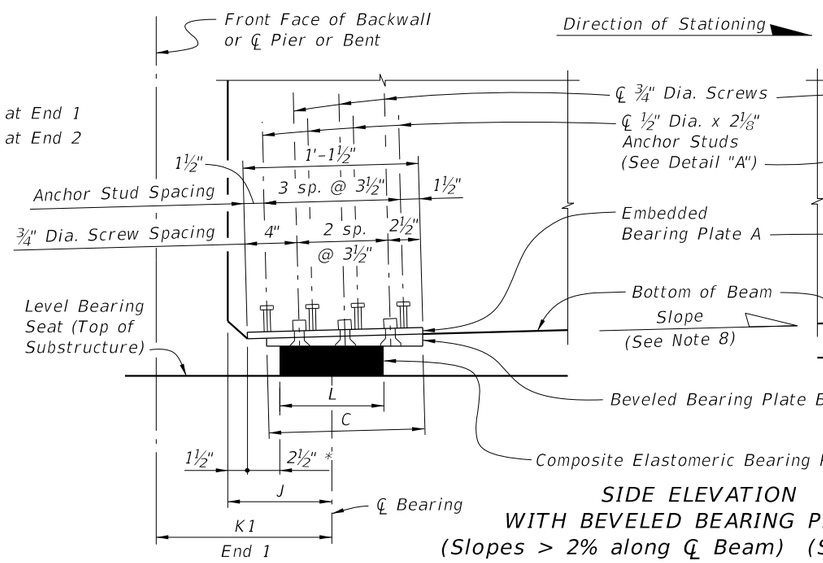

SIDE ELEVATION
WITH BEVELED BEARING PLATES
(Slopes > 2% along ℄ Beam) (See Note 7)

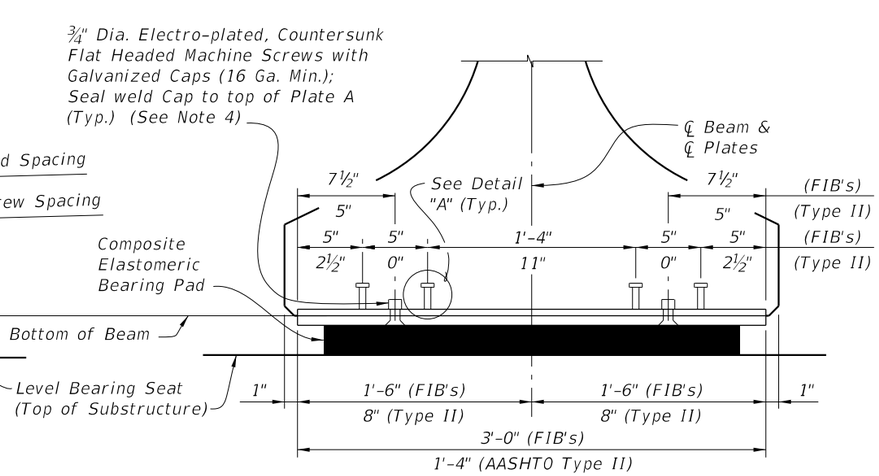

END ELEVATION
WITH BEVELED BEARING PLATE

9/23/2021 8:35:22 AM

LAST REVISION	REVISION	DESCRIPTION:			INDEX	SHEET
07/01/14			FY 2022-23 STANDARD PLANS	BEARING PLATES (TYPE 2) - PRESTRESSED FLORIDA-I AND AASHTO TYPE II BEAMS	450-512	1 of 2

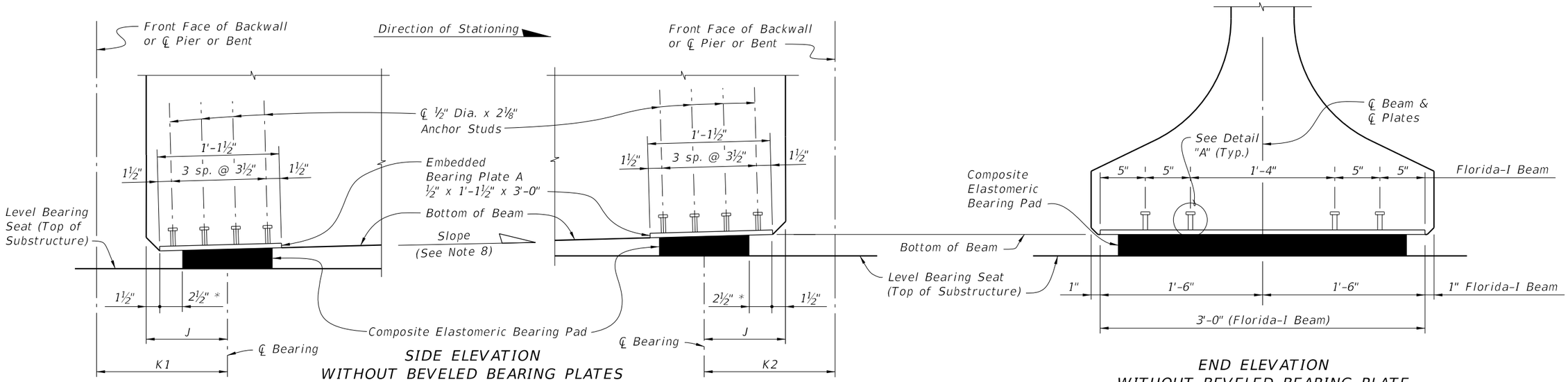

SIDE ELEVATION
WITHOUT BEVELED BEARING PLATES
(Slopes ≤ 0.5% along ℄ Beam) (See Note 7)

END ELEVATION
WITHOUT BEVELED BEARING PLATE

* ½" for Pad Type K

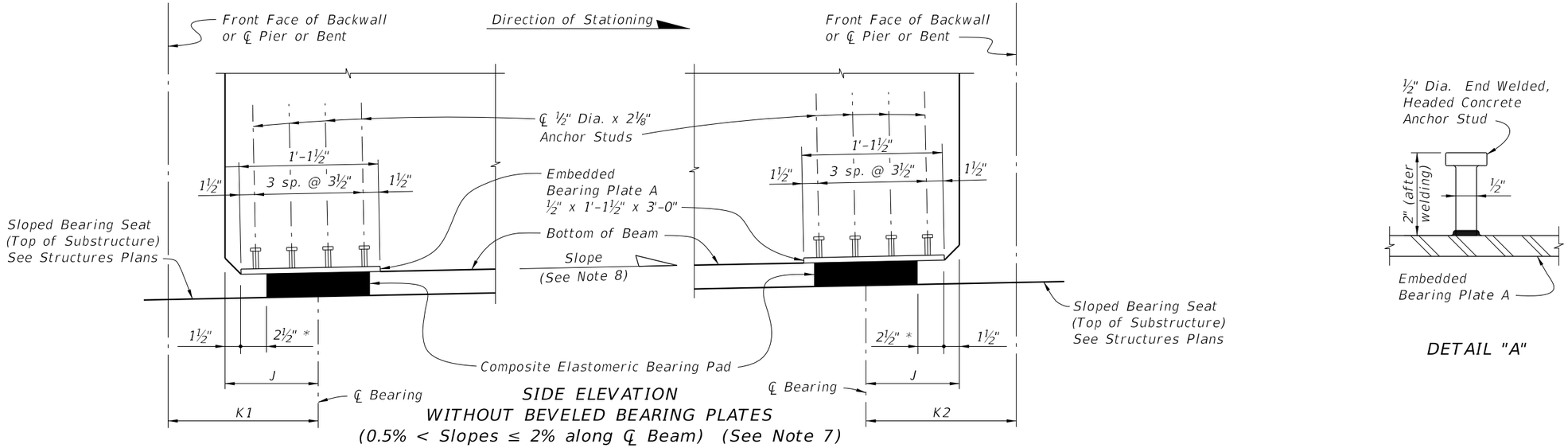

SIDE ELEVATION
WITHOUT BEVELED BEARING PLATES
(0.5% < Slopes ≤ 2% along ℄ Beam) (See Note 7)

DETAIL "A"

CROSS REFERENCE:
See Sheet 1 for Notes.

9/23/2021 8:35:23 AM

LAST REVISION	REVISION	DESCRIPTION:			INDEX	SHEET
07/01/14			FDOT FY 2022-23 STANDARD PLANS	BEARING PLATES (TYPE 2) - PRESTRESSED FLORIDA-I AND AASHTO TYPE II BEAMS	450-512	2 of 2

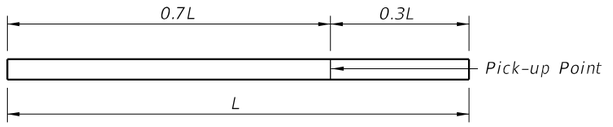

1-POINT PICK-UP

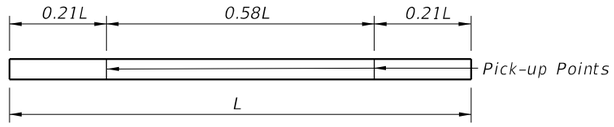

2-POINT PICK-UP

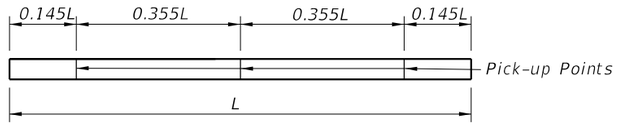

3-POINT PICK-UP

PILE PICK-UP DETAILS

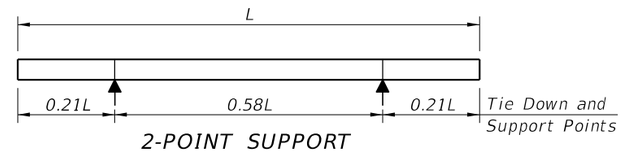

2-POINT SUPPORT

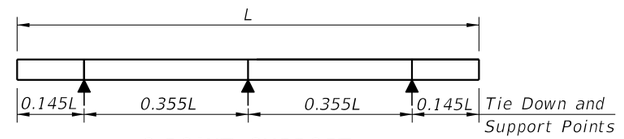

3-POINT SUPPORT

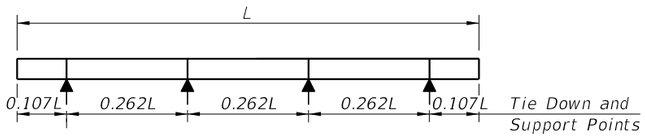

4-POINT SUPPORT

STORAGE AND TRANSPORTATION SUPPORT DETAILS

PRESTRESSED CONCRETE PILE NOTES:

1. Work this Index with the Square Prestressed Concrete Pile Splices (Index 455-002), the Prestressed Concrete Pile Standards (Index 455-012 thru 455-030), the High Moment Capacity Square Prestressed Concrete Pile (Index 455-031) and the Pile Data Table in the Structures Plans.
2. Concrete:
   - A. Piles: Class V (Special), except use Class VI for High Moment Capacity Pile (Index 455-031).
   - B. High Capacity Splice Collar: Class V (Special).
   - C. See "GENERAL NOTES" in the Structures Plans for locations where the use of Highly Reactive Pozzolans is required.
3. Concrete strength at time of prestress transfer:
   - A. Piles: 4,000 psi minimum.
   - B. High Moment Capacity Piles: 6,500 psi minimum.
4. Carbon-Steel Reinforcing:
   - A. Bars: Meet the requirements of Specification Section 415.
   - B. Prestressing Strands: Meet the requirements of Specification Section 933.
   - C. Protect all strands permanently exposed to the environment and not embedded under final conditions in accordance with Specification Section 450.
5. Spiral Ties:
   - A. Tie each wrap of the spiral strand to a minimum of two corner strands.
   - B. One full turn required for spiral splices.
6. Pile Splices: Fill dowel holes and form the joint between pile sections with a Type AB Epoxy Compound in accordance with Specification Section 962. Use an Epoxy Bonding Compound or an Epoxy Mortar as recommended by the Manufacturer.

TABLE OF MAXIMUM PILE PICK-UP AND SUPPORT LENGTHS

	D = Square Pile Size (inches)					Required Storage and Transportation Detail	Pick-Up Detail
	12	14	18	24	30		
Maximum Pile Length (Feet)	48	52	59	68	87	2, 3, or 4 point	1 Point
	69	75	85	98	124	2, 3, or 4 point	2 Point
	99	107	121	140	178	3 or 4 point	3 Point

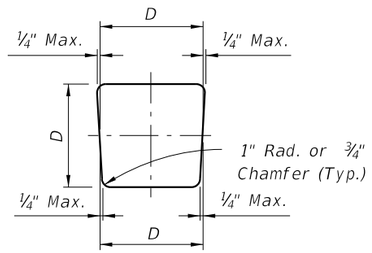

TYPICAL PILE SHAPE FOR MOLD FORMS

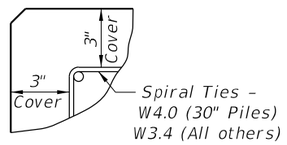

DETAIL SHOWING TYPICAL COVER

9/23/2021 8:35:48 AM

LAST REVISION	REVISION	DESCRIPTION:				
11/01/20			FDOT	FY 2022-23 STANDARD PLANS	SQUARE PRESTRESSED CONCRETE PILES - TYPICAL DETAILS & NOTES	INDEX 455-001	SHEET 1 of 1

NOTES:

1. For Sections D-D, E-E, & F-F see Index 455-012 thru 455-030 for applicable concrete pile size and Pile Splice Reinforcement Details.
2. Prestressing strands, spiral ties and/or reinforcement are not shown for clarity.
3. In cases where pile splices are desired due to length limitations in shipping and/or handling, the "Drivable Preplanned Prestressed Precast Splice Detail" shall be used. Mechanical Pile Splices contained on the Approved Products List (APL) may also be used.
4. When preformed dowel holes are utilized, the 1" spiral tie pitch shall be continued to 4'-0" below the head of the pile, See Index 455-018, 455-020 & 455-024. Preformed holes shall utilize either removable preforming material or stay-in-place corrugated galvanized steel ducts. Stay-in-place ducts shall be fabricated from galvanized sheet steel meeting the requirements of ASTM A653, Coating Designation G90, 26 gauge. Ducts shall be 2" diameter with a minimum corrugation (rib) height of 0.12 in. Ducts shall be fabricated with either welded or interlocked seams. Galvanizing of welded seams will not be required.
5. For tension piles where top of Prestressed Pile is less than 3 feet below Pile Cut-off Elevation, extend No. 10 Dowels into cap beyond Pile Cut-off Elevation to achieve development as approved by the Engineer.

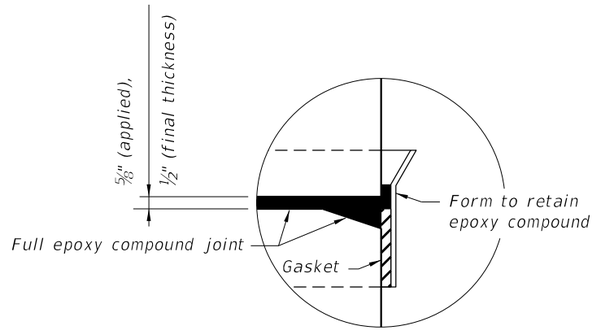

DETAIL A

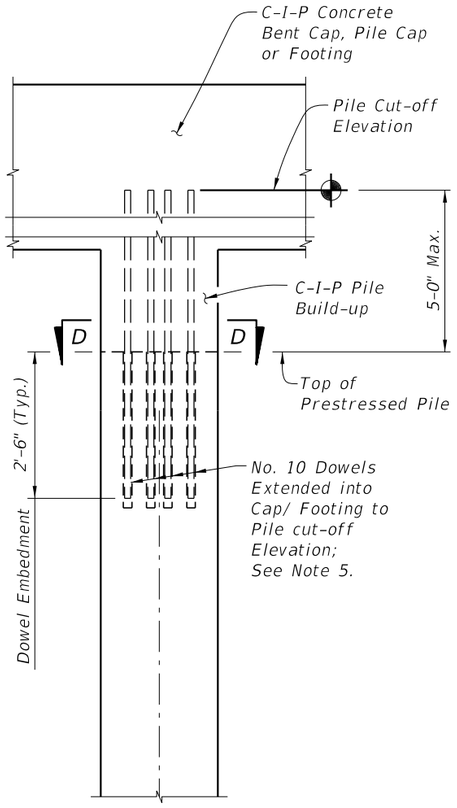

UNFORESEEN
REINFORCED C-I-P
PILE BUILD-UP DETAIL

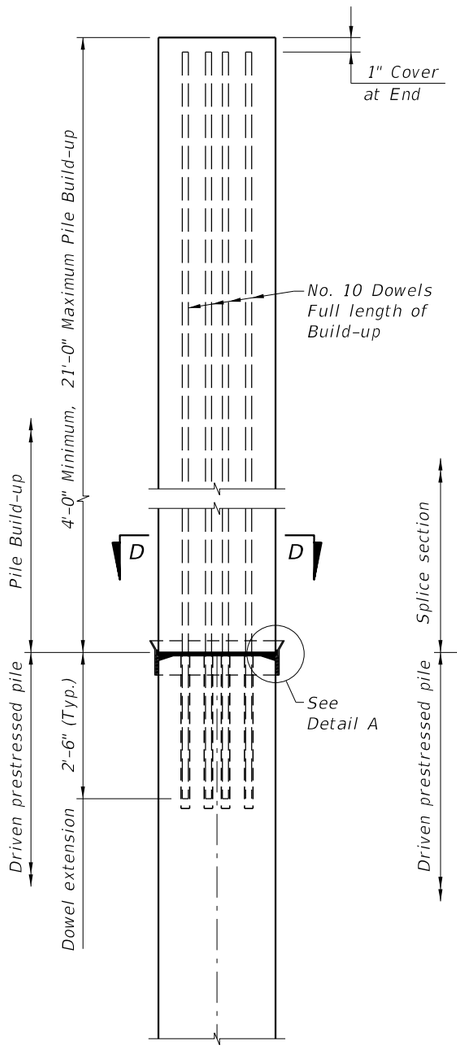

NON-DRIVABLE UNFORESEEN
REINFORCED PRECAST
PILE BUILD-UP DETAIL

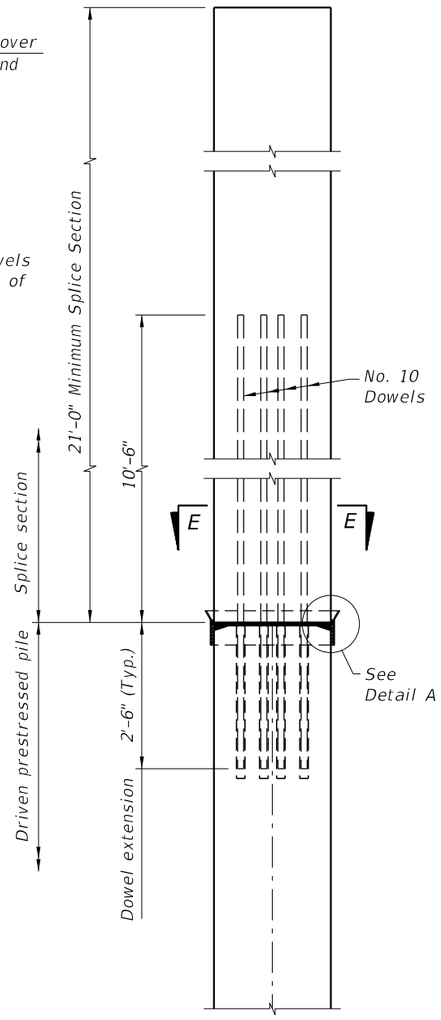

DRIVABLE UNFORESEEN
PRESTRESSED PRECAST
PILE SPLICE DETAIL

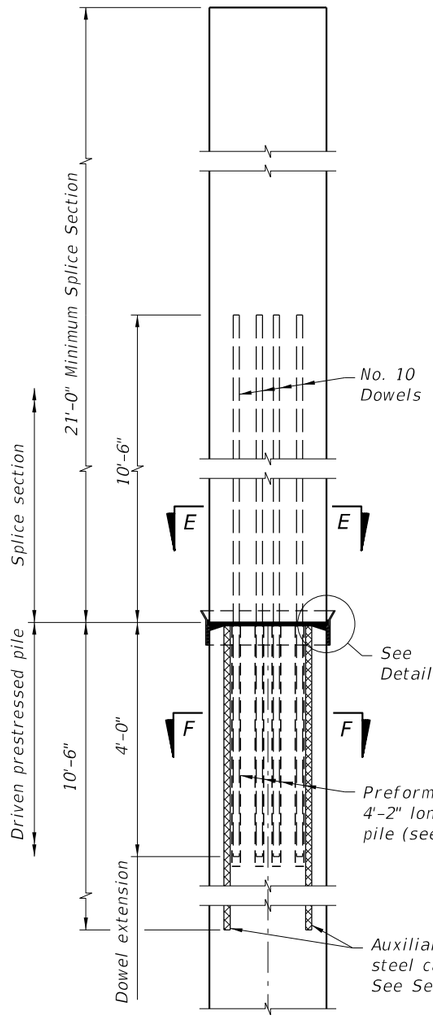

DRIVABLE PREPLANNED
PRESTRESSED PRECAST
PILE SPLICE DETAIL

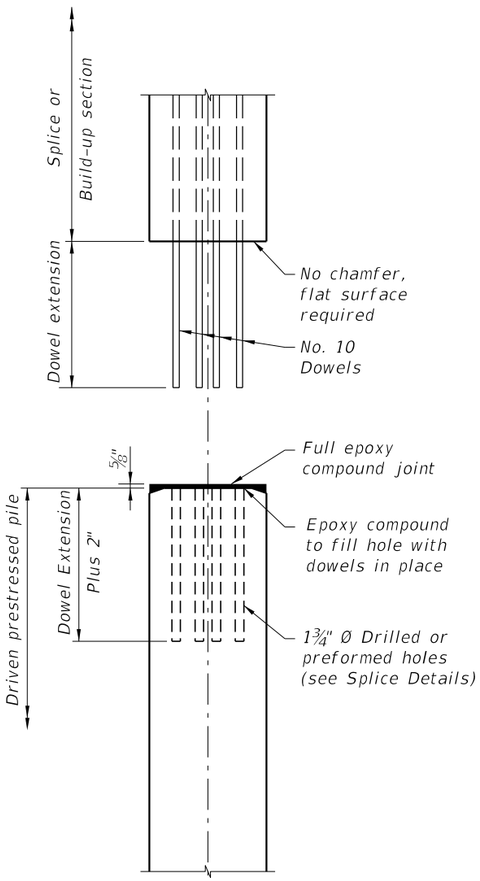

TYPICAL SPLICE
BEFORE BONDING

9/23/2021 8:36:07 AM

LAST REVISION	REVISION	DESCRIPTION:			INDEX	SHEET
07/01/14			FY 2022-23 STANDARD PLANS	SQUARE PRESTRESSED CONCRETE PILE SPLICES	455-002	1 of 1

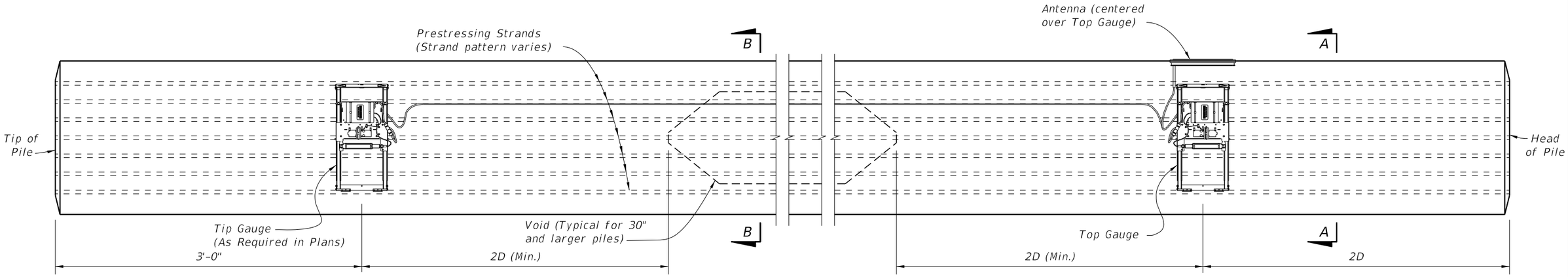

ELEVATION

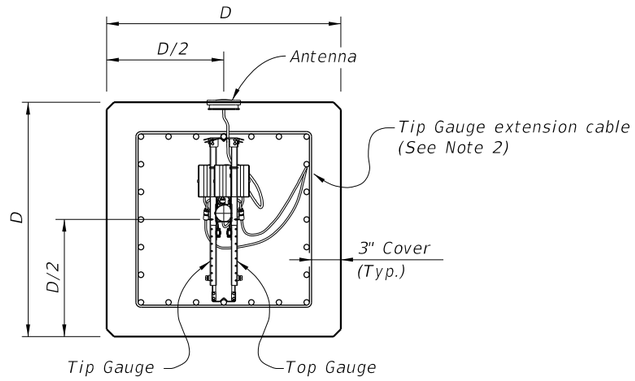

SECTION A-A
(Strand Pattern with odd number of strands per face)

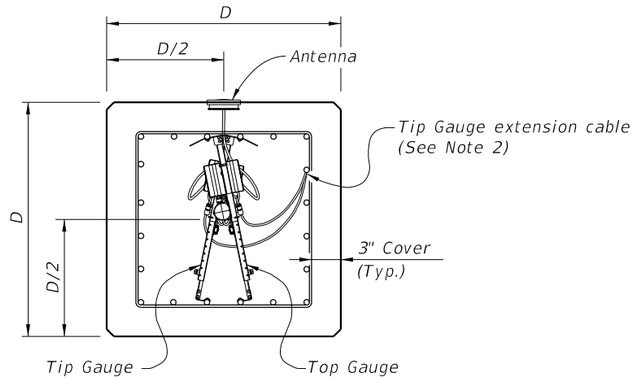

SECTION A-A
(Strand Pattern with even number of strands per face)

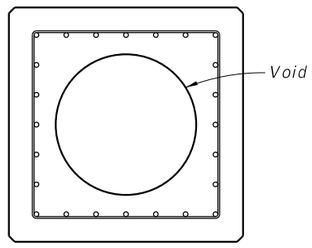

SECTION B-B
(Showing Voided Pile, Solid Pile Similar)

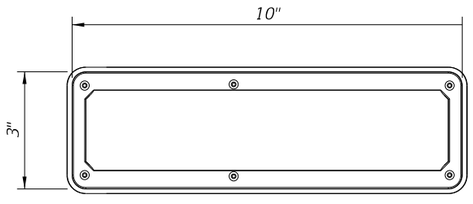

ANTENNA TOP VIEW

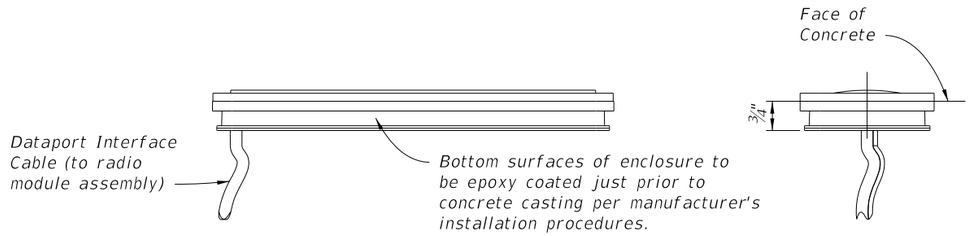

ANTENNA SIDE VIEW

ANTENNA END VIEW

NOTES:

1. For piles 18" and larger installed for bridge foundations, provide EDC Instrumentation in accordance with Specification Section 455.

2. Attach Tip Gauge extension cable to the underside of the strand shown in Section A–A. Secure cable to strand with nylon wire ties spaced a maximum of 6ft. along cable.

9/23/2021 8:36:31 AM

LAST REVISION	REVISION	DESCRIPTION:			INDEX	SHEET
11/01/20			FDOT FY 2022-23 STANDARD PLANS	SQUARE PRESTRESSED CONCRETE PILES - EDC INSTRUMENTATION	455-003	1 of 1

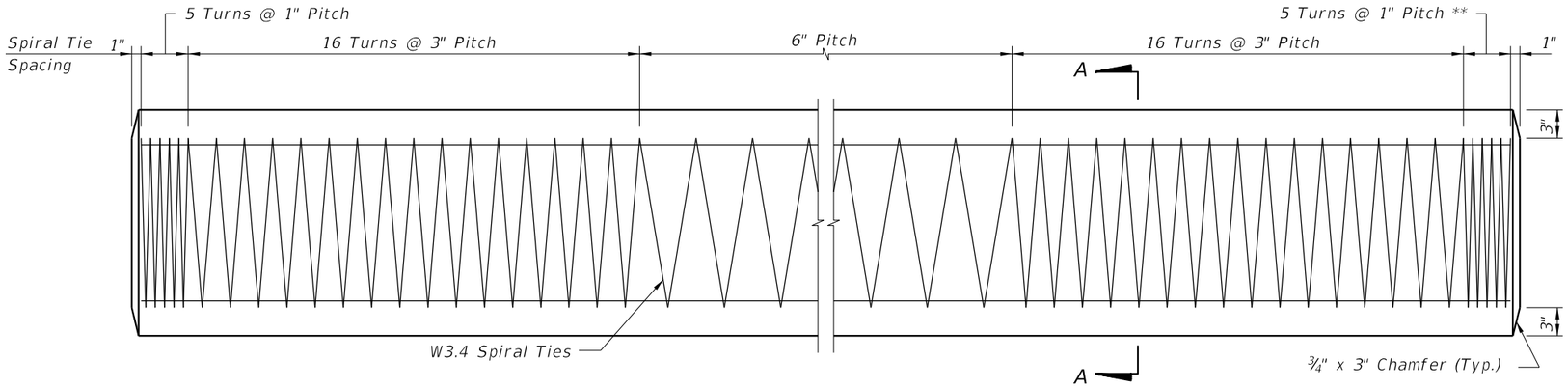

ELEVATION

** See Note 4 on Index 455-002

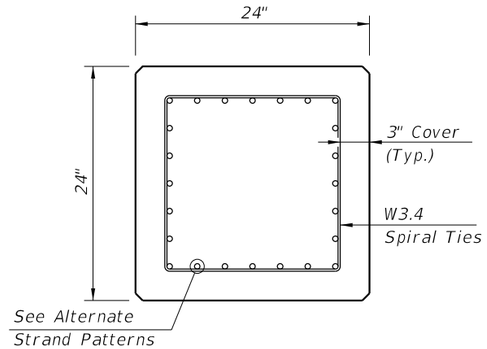

SECTION A-A

ALTERNATE STRAND PATTERNS

16 ~ 0.6" Ø, Grade 270 LRS, at 44 kips
20 ~ ½" Ø (Special), Grade 270 LRS, at 34 kips
24 ~ ½" Ø, Grade 270 LRS, at 31 kips

NOTES:
1. Work this Index with Index 455-001 – Typical Details and Notes for Square Prestressed Concrete Piles and Index 455-002 – Square Prestressed Concrete Pile Splices.
2. Any of the given Alternate Strand Patterns may be utilized. The strands shall be located as follows:
   Place one strand at each corner and place the remaining strands equally spaced between the corner strands.
   The total strand pattern shall be concentric with the nominal concrete section of the pile.

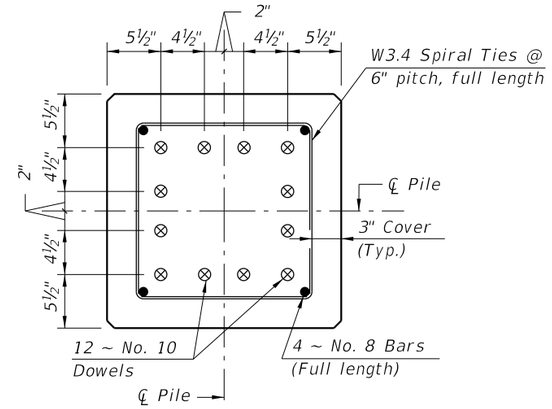

SECTION D-D
(See Non-Drivable Unforeseen Reinforced Precast Pile Splice Detail)

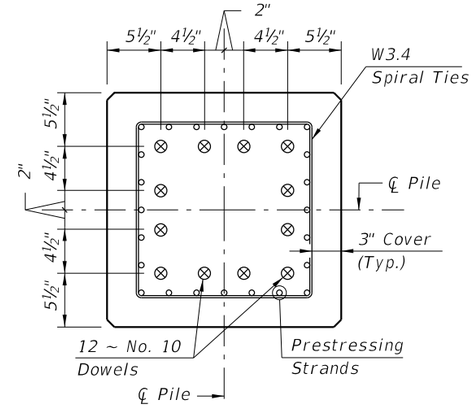

SECTION E-E
(See Drivable Prestressed Precast Pile Splice Detail)

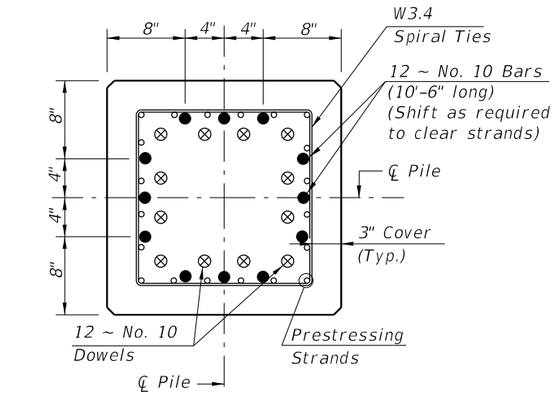

SECTION F-F
(See Drivable Preplanned Pile Splice Detail)

9/23/2021 8:38:16 AM

LAST REVISION	REVISION	DESCRIPTION:			INDEX	SHEET
01/01/12			FDOT FY 2022-23 STANDARD PLANS	24" SQUARE PRESTRESSED CONCRETE PILE	455-024	1 of 1

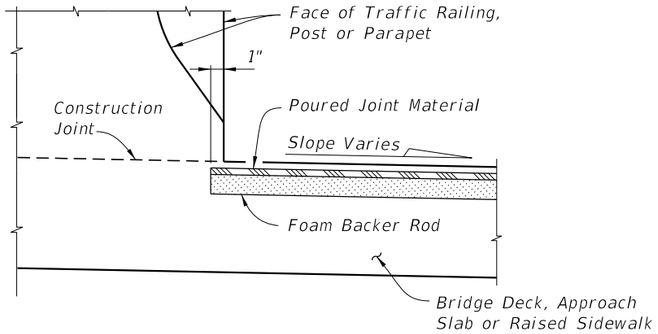

PARTIAL SECTION ALONG ℄ JOINT
JOINT TREATMENT AT HIGH SIDE OF
DECK WITH SLOPES 1% OR GREATER

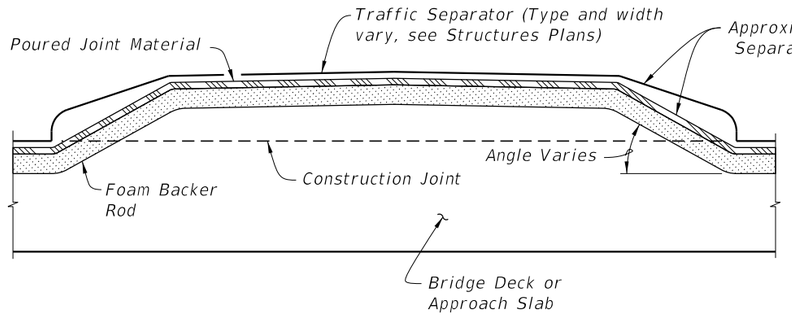

PARTIAL SECTION ALONG ℄ JOINT,
JOINT TREATMENT AT TRAFFIC SEPARATOR

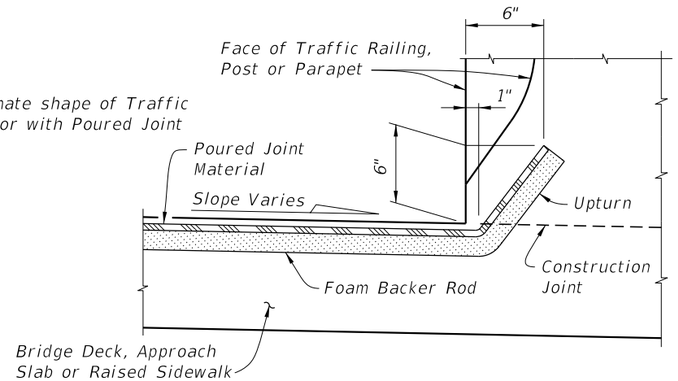

PARTIAL SECTION ALONG ℄ JOINT
JOINT TREATMENT AT LOW SIDE OF DECK OR
HIGH SIDE OF DECK WITH SLOPES < 1%

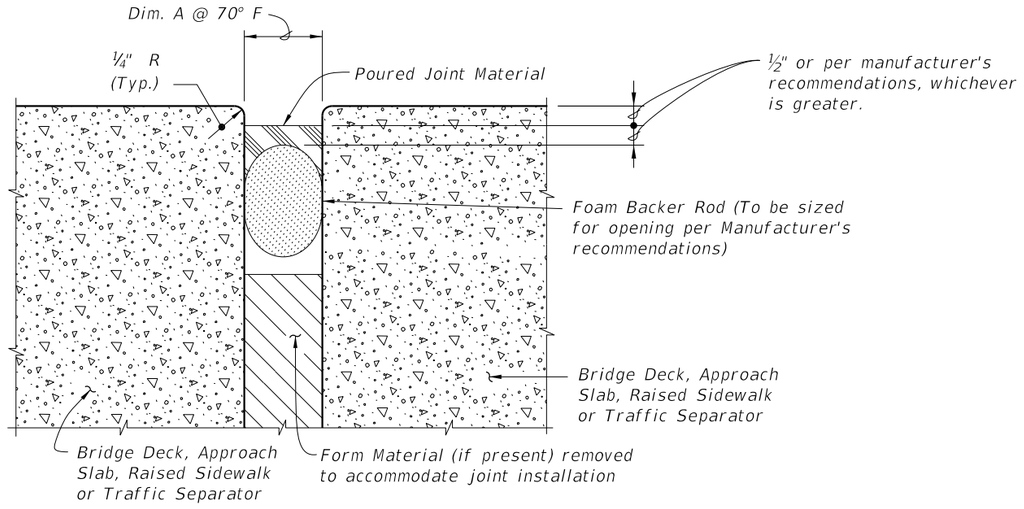

TYPICAL SECTION THRU JOINT

GENERAL NOTES:

1. Furnish and install Poured Joint With Backer Rod Expansion Joint Systems in accordance with Specification Sections 458 and 932 using Type D silicone sealant material.
2. Refer to the Structures Plans, Poured Expansion Joint Data Table for Dim. A @ 70° F.

9/23/2021 8:50:20 AM

LAST REVISION	REVISION	DESCRIPTION:	FDOT	FY 2022-23 STANDARD PLANS	EXPANSION JOINT SYSTEM - POURED JOINT WITH BACKER ROD	INDEX	SHEET
07/01/14						458-110	1 of 2

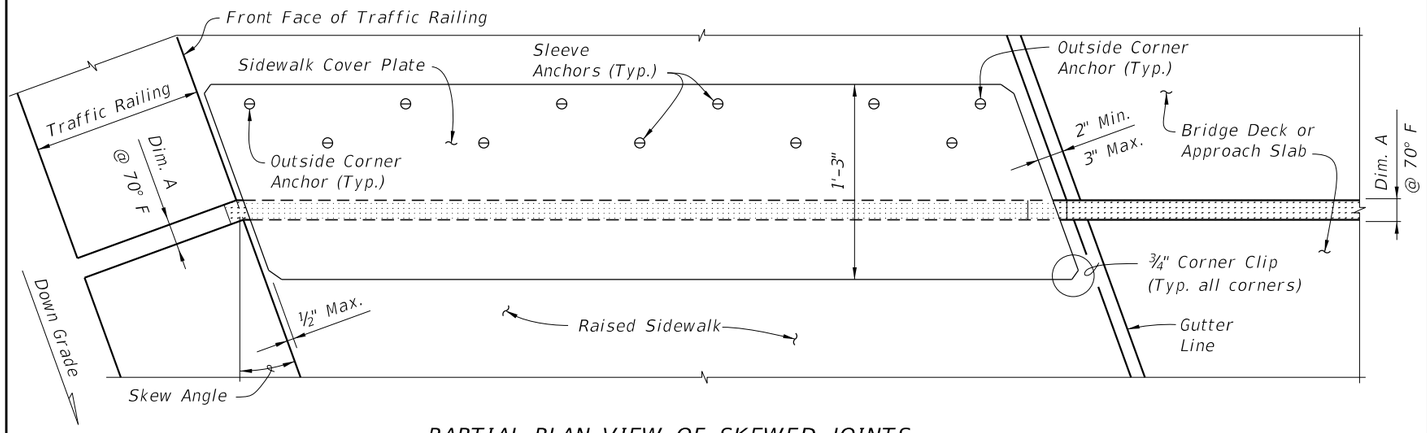

PARTIAL PLAN VIEW OF SKEWED JOINTS

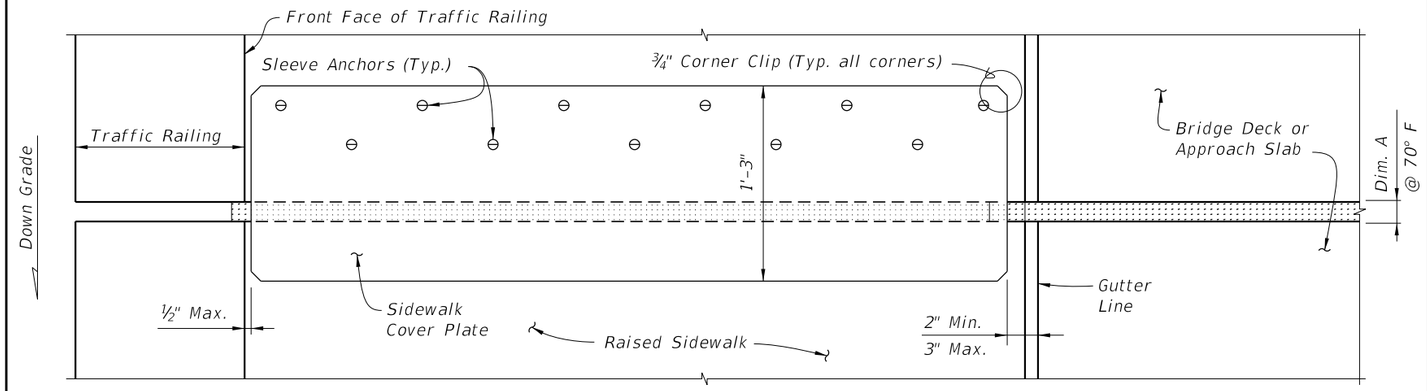

PARTIAL PLAN VIEW OF NON-SKEWED JOINTS

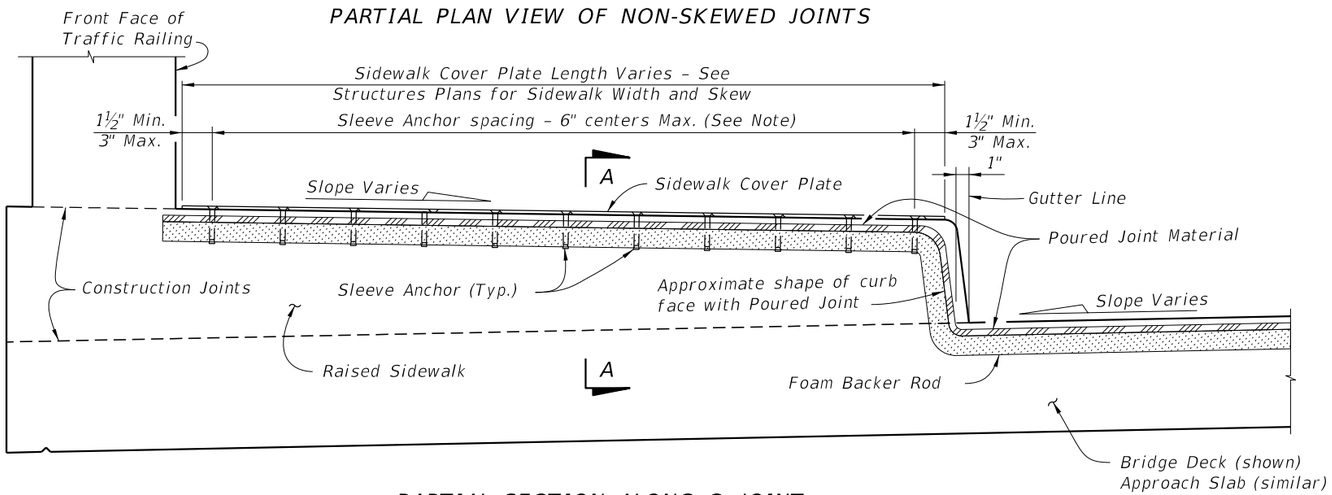

PARTIAL SECTION ALONG ℄ JOINT

RAISED SIDEWALK DETAIL

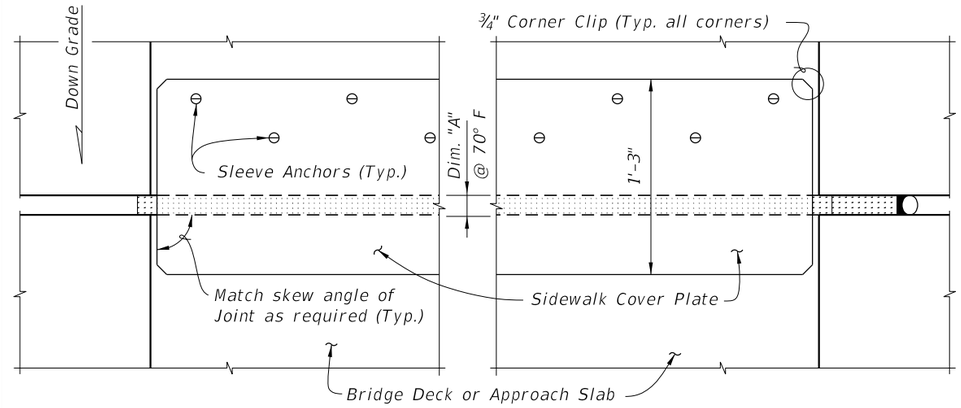

PARTIAL PLAN VIEW

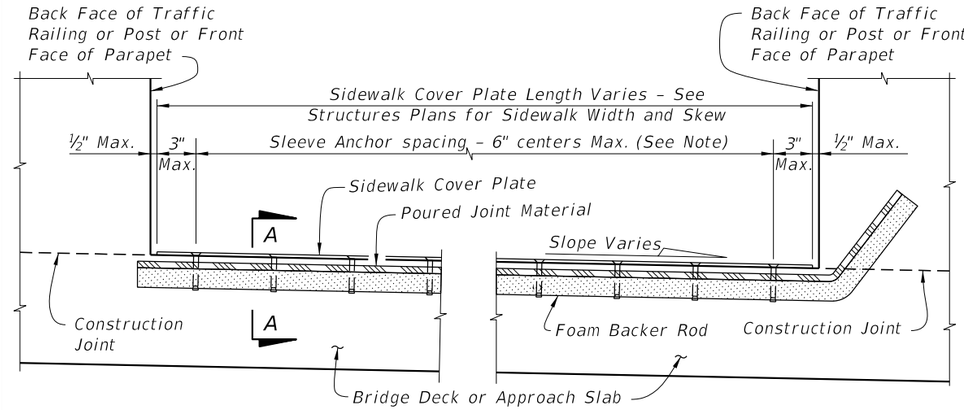

PARTIAL SECTION ALONG ℄ JOINT

FLUSH SIDEWALK DETAIL

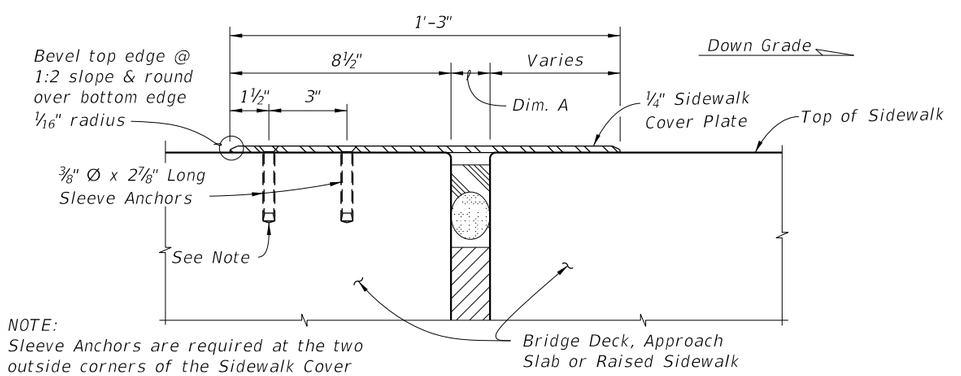

NOTE:
Sleeve Anchors are required at the two outside corners of the Sidewalk Cover Plate. Space Sleeve Anchors uniformly between the corner anchors.

SECTION A-A

9/23/2021 8:50:21 AM

LAST REVISION	REVISION	DESCRIPTION:				
07/01/13			FDOT FY 2022-23 STANDARD PLANS	EXPANSION JOINT SYSTEM - POURED JOINT WITH BACKER ROD	INDEX 458-110	SHEET 2 of 2

TYPICAL PROFILES FOR TENDONS WITH FLEXIBLE FILLER

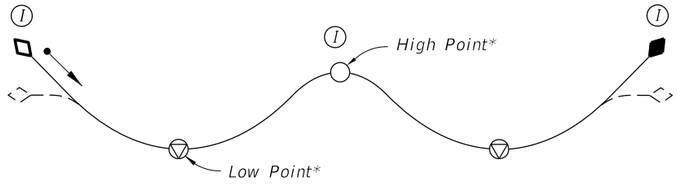

Profile F1
(2 Span Profile shown; Profiles for 3 or more Spans similar)

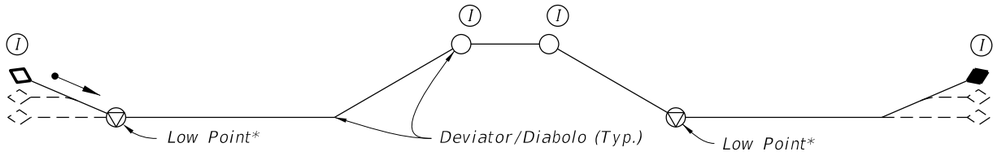

Profile F2
(2 Span Profile shown; Profiles for 3 or more Spans similar)

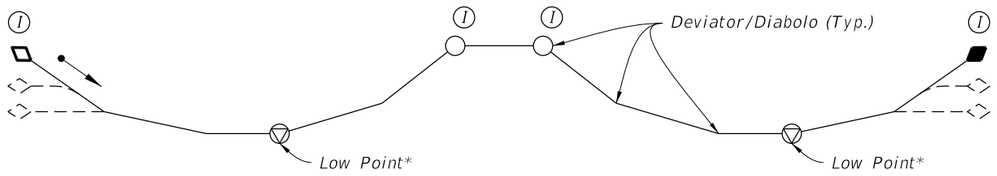

Profile F3
(2 Span Profile shown; Profiles for 3 or more Spans similar)

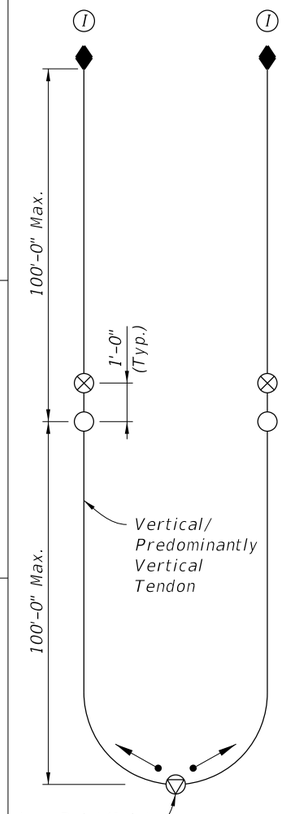

Profile F8

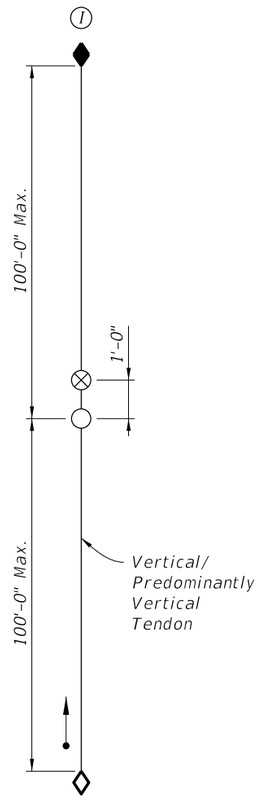

Profile F9

LEGEND:

- Strand, Wire or Bar Tendon
- Anchorage with Filler Inlet at lower end of Tendon
- Anchorage with Filler Outlet at higher end of Tendon
- Alternate tendon profile immediately adjacent to Anchorage
- Supplementary Filler Inlet
- Filler Port / Outlet
- Drain (See Specifications Section 462 for additional Drain location requirements)
- Direction of Filler Flow
- I Inspection Location

* Adjust location to coincide with the true high or low point(s) of the tendon.

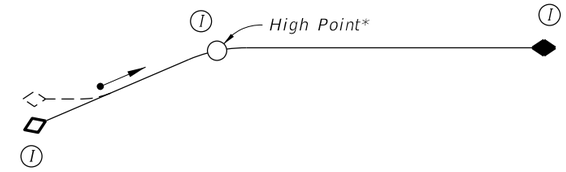

Profile F12

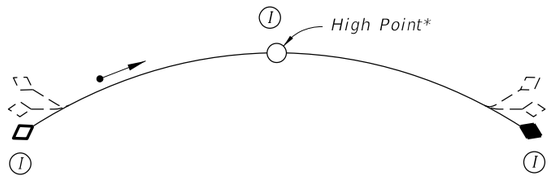

Profile F4

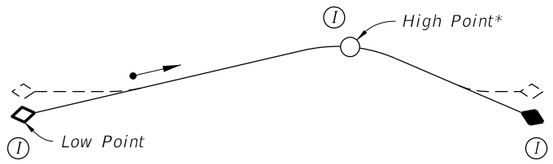

Profile F6

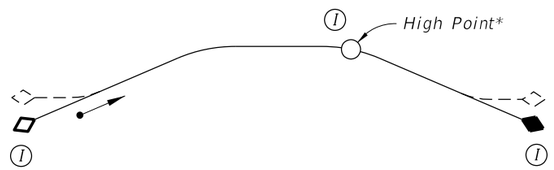

Profile F10

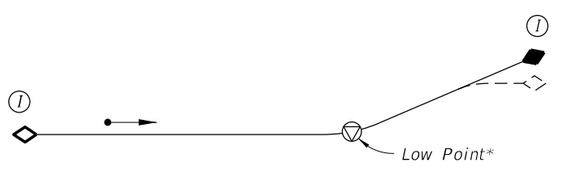

Profile F13

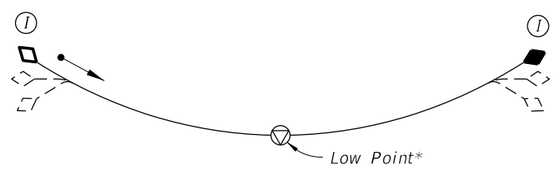

Profile F5

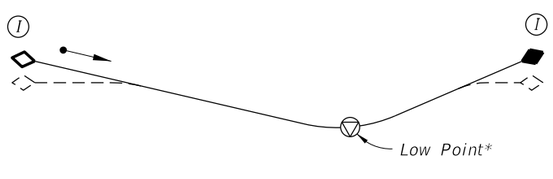

Profile F7

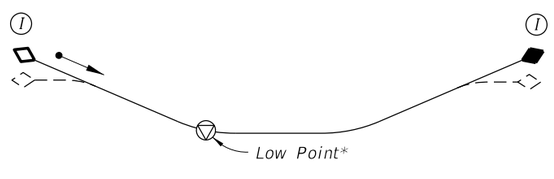

Profile F11

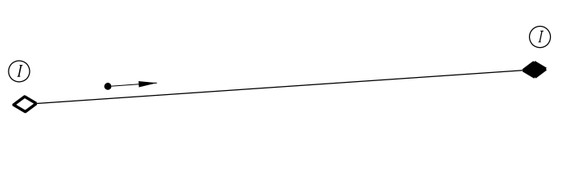

Profile F14

9/23/2021 9:22:14 AM

LAST REVISION	REVISION	DESCRIPTION:	FDOT FY 2022-23 STANDARD PLANS	POST-TENSIONING TENDON PROFILES	INDEX	SHEET
11/01/16					462-001	1 of 2

TYPICAL PROFILES FOR TENDONS WITH GROUT FILLER

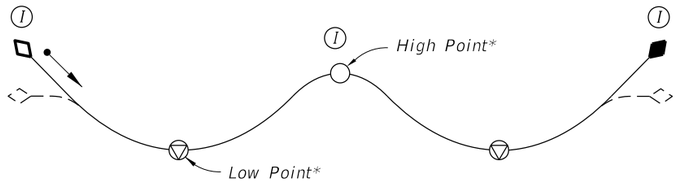

Profile G1

(2 Span Profile shown; Profiles for 3 or more Spans similar)



Profile G2

(Profile for Single Cell Box shown; Profiles for Multiple Cell Boxes similar)

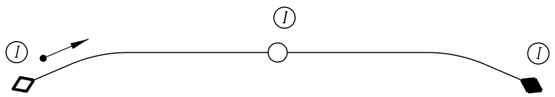

Profile G3

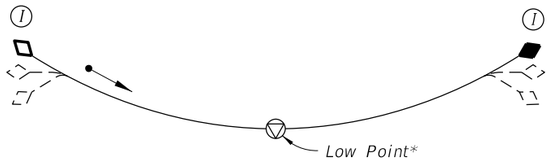

Profile G4

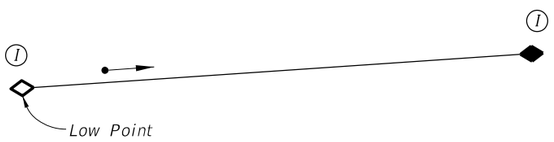

Profile G5

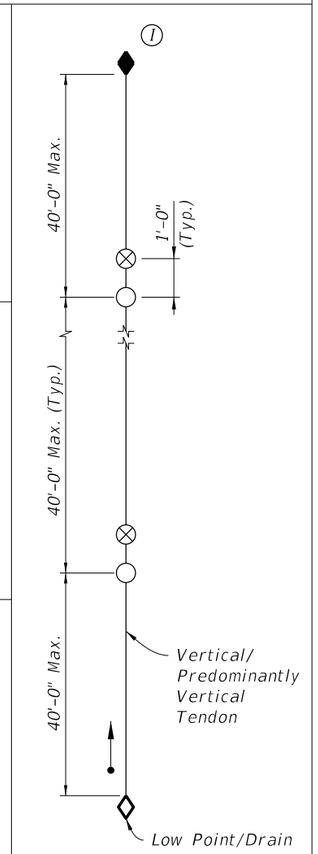

Profile G6

NOTE: See Sheet 1 of 2 for Typical Profiles for Tendons with Flexible Filler and for Legend of Symbols.

9:22:15 AM

9/23/2021

LAST REVISION	REVISION	DESCRIPTION:	FDOT FY 2022-23 STANDARD PLANS	POST-TENSIONING TENDON PROFILES	INDEX	SHEET
7/22/16					462-001	2 of 2

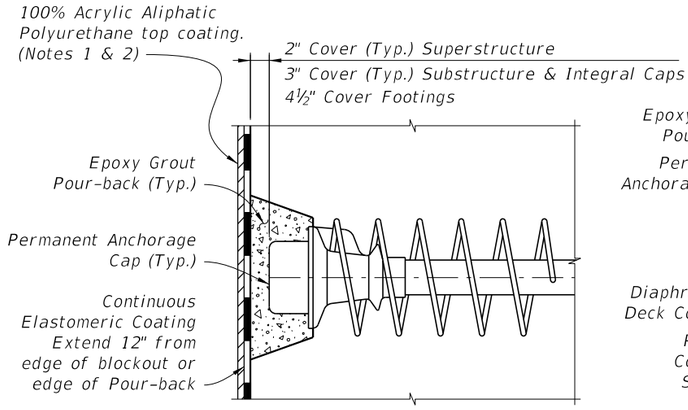

TYPE 1

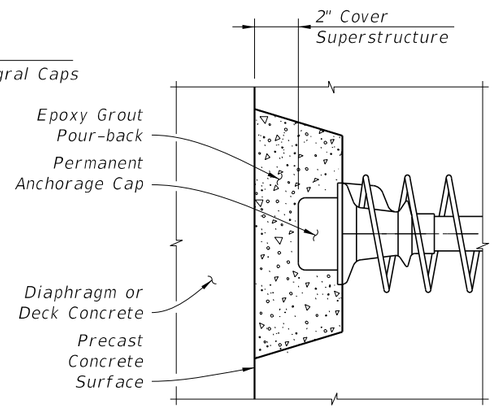

TYPE 2

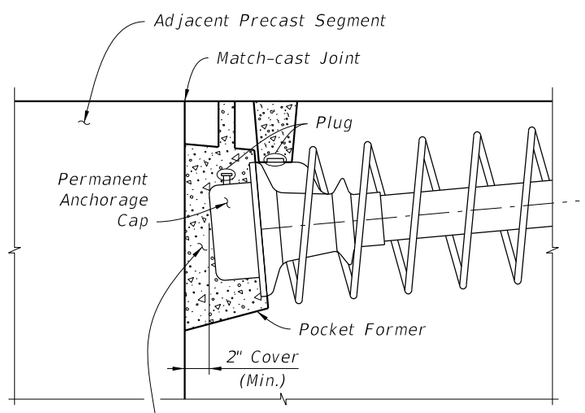

TYPE 3A

Epoxy Grout Pour-back placed after permanent tendons anchored in adjacent segment have been stressed

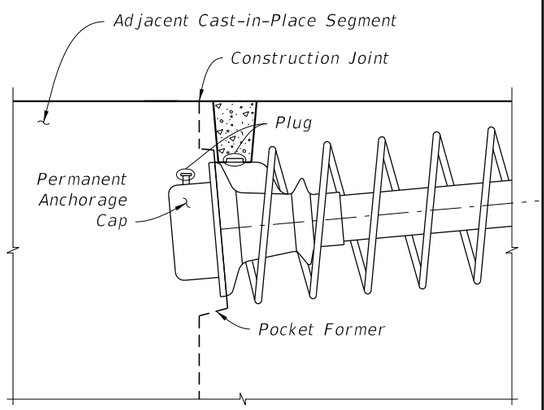

TYPE 3B

Notes:

1. Meet the requirements of Specification Section 975-5.
2. Extend top coat 1" beyond limits of Elastomeric Coating.

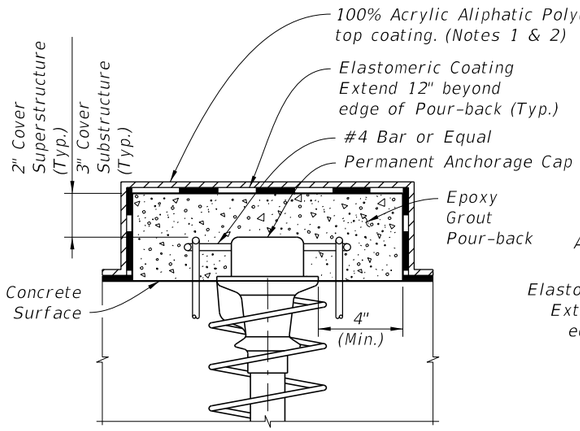

TYPE 4

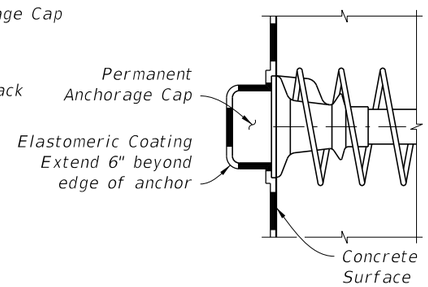

TYPE 5

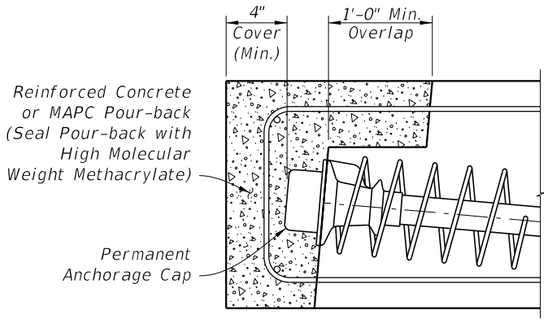

TYPE 6

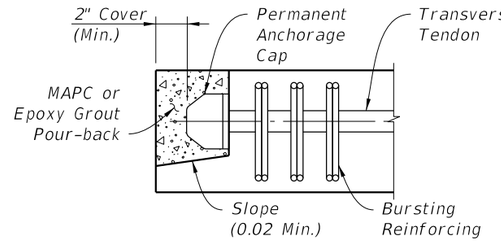

TYPE 7

Type 7 Notes:

1. Traffic or Pedestrian/Bicycle Railing not shown for clarity.
2. Where Pour-back is not protected by Traffic or Pedestrian/Bicycle Railing, Coat Pour-back with High Molecular Weight Methacrylate.

ANCHORAGE PROTECTION FOR STRAND TENDONS

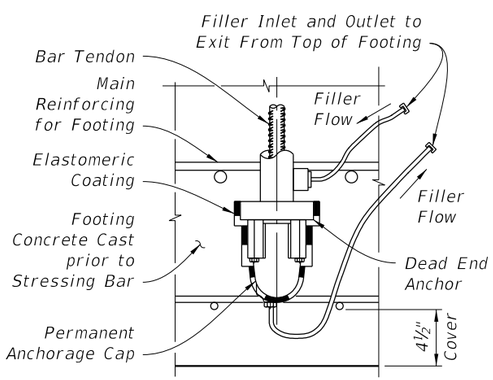

TYPE 8

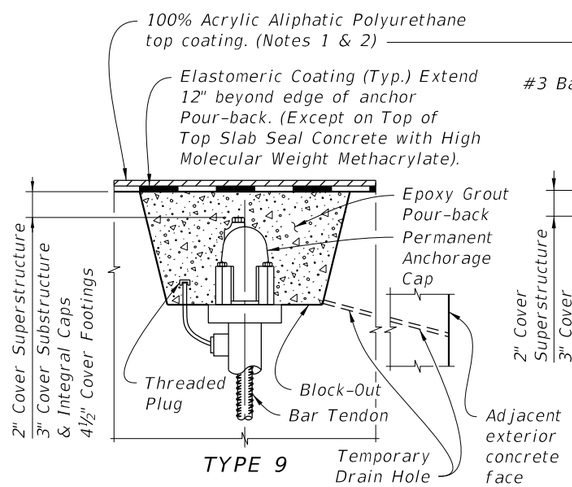

TYPE 9

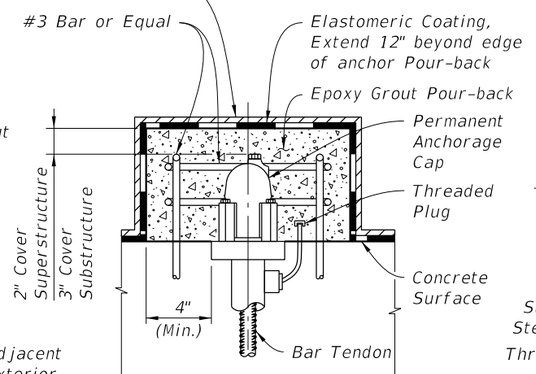

TYPE 10

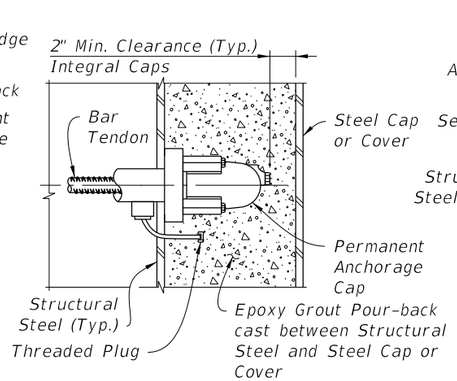

TYPE 11
(Shear Studs not Shown for Clarity)

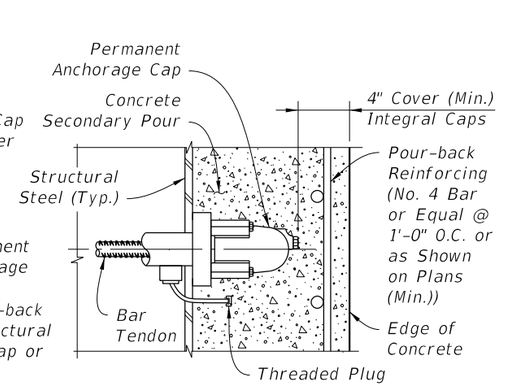

TYPE 12
(Shear Studs not Shown for Clarity)

ANCHORAGE PROTECTION FOR BAR TENDONS

9:22:36 AM
9/23/2021

LAST REVISION	REVISION	DESCRIPTION:			
11/01/18			FY 2022-23 STANDARD PLANS	POST-TENSIONING ANCHORAGE PROTECTION	INDEX 462-002 / SHEET 1 of 1

NOTE:
Where a vacuum system is connected to an anchorage, connect both the anchorage outlet and the cap outlet to the vacuum system.

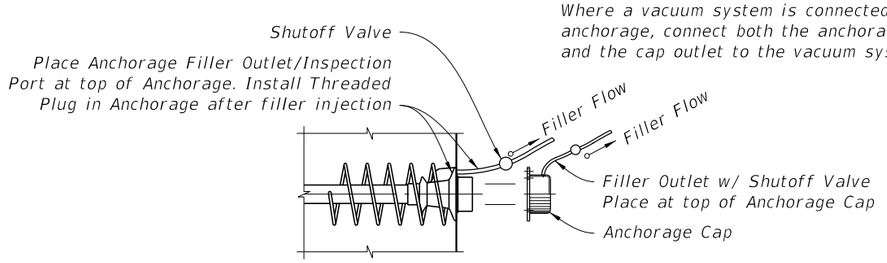

FACE INSPECTED
ANCHORAGE WITH FILLER OUTLET

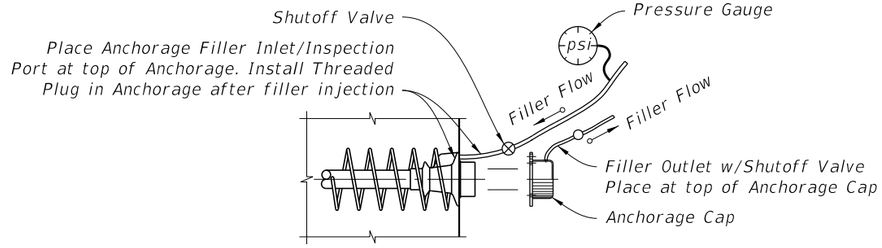

FACE INSPECTED
ANCHORAGE WITH FILLER INLET

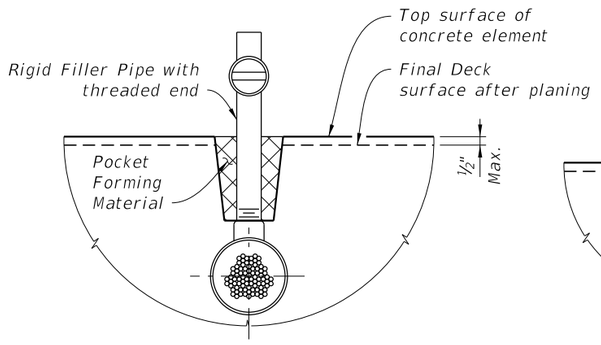

1 FILLER OUTLET CONNECTION TO DUCT

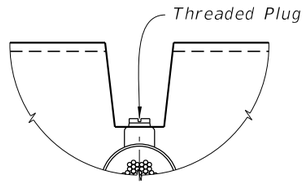

2 POCKET PREPARATION

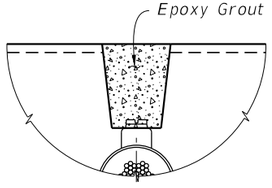

3 FILLING POCKET

PROCEDURE:

1. After filler injection is completed, Remove Pocket Forming Material and Rigid Filler Pipe.
2. Inspect Tendon for voids as necessary.
3. Vacuum inject as required. If grout is used, allow grout to cure. If flexible filler is used, replace filler displaced by inspection. Remove pipe used for vacuum injecting.
4. Clean threads and rethread as required.
5. Install Threaded Plug into Outlet to form a tight fit.
6. Clean and roughen sides of pocket.
7. Fill Pocket with Epoxy Grout.

FILLER OUTLET DETAIL AT HORIZONTAL SURFACES

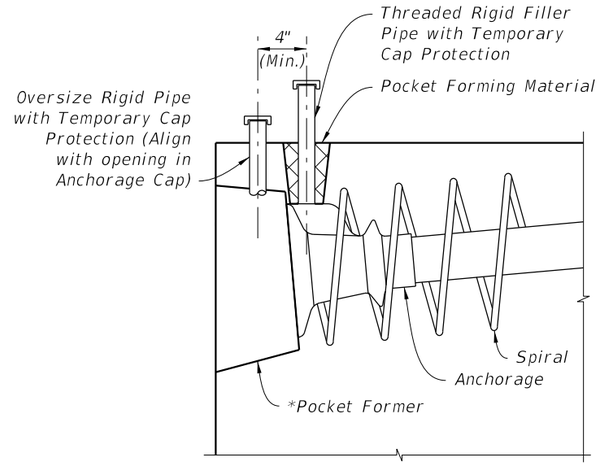

1 INSTALLATION & SHIPPING

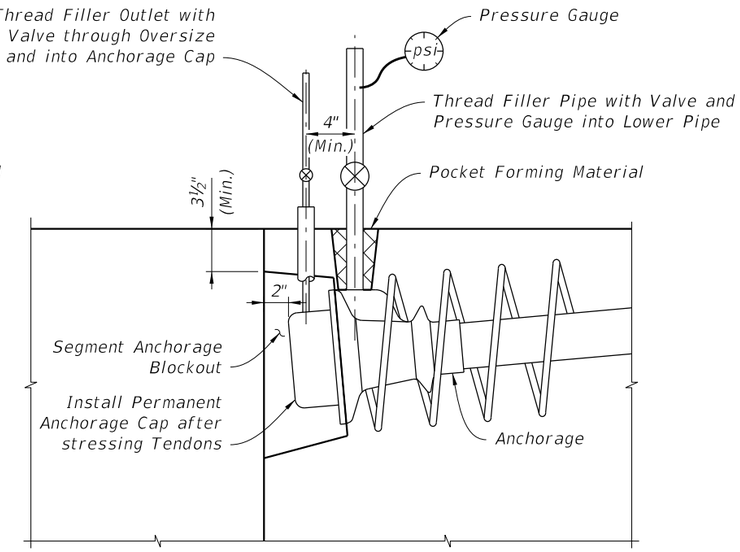

2 FILLER INJECTION

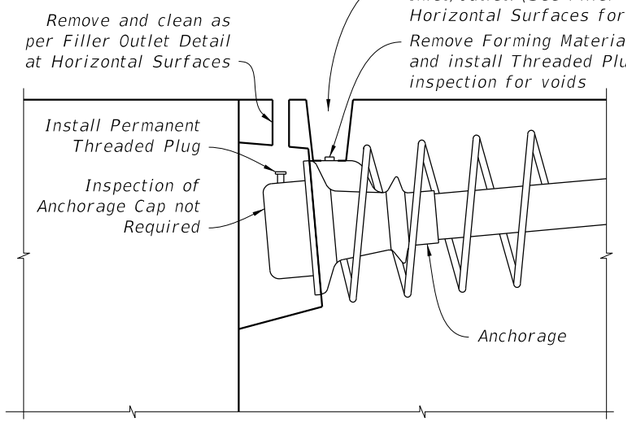

3 INSPECTION

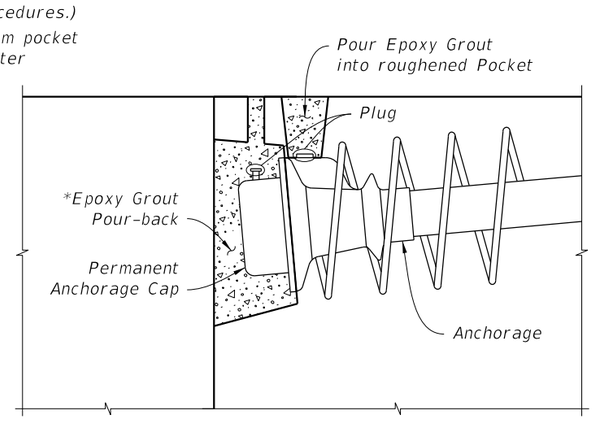

4 PROTECTION

TOP INSPECTED ANCHORAGE WITH FILLER INLET INSTALLATION, FILLER INJECTION, INSPECTION & PROTECTION

NOTES:

1. Holes used for the Inspection and Filler Inlets/Outlets may be formed using tapered pipes or mandrels.
2. Where a vacuum system is connected to an anchorage, connect both the anchorage outlet and the cap outlet to the vacuum system.

* Round ◯ Pocket Former – Gravity fed placement of epoxy grout acceptable
Modified Square ⬠ Pocket Former – Gravity fed placement of epoxy grout acceptable
Square □ Pocket Former – Vacuum epoxy grouting required

9/23/2021 9:23:01 AM

LAST REVISION	REVISION	DESCRIPTION:	FDOT	FY 2022-23 STANDARD PLANS	POST-TENSIONING ANCHORAGE AND TENDON FILLING DETAILS	INDEX	SHEET
11/01/18						462-003	1 of 2

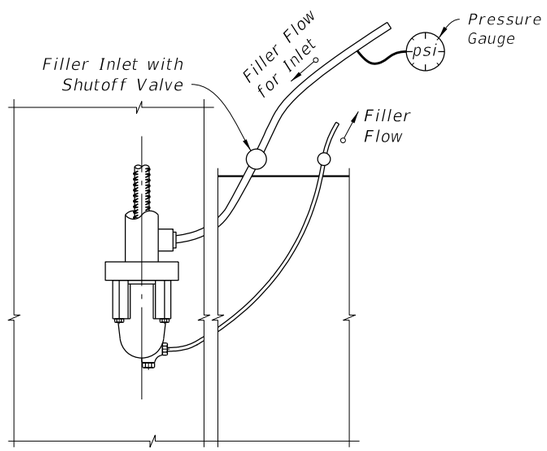

INLET END

(EMBEDDED ANCHORAGE SHOWN; ANCHORAGE AT CONCRETE SURFACE SIMILAR)

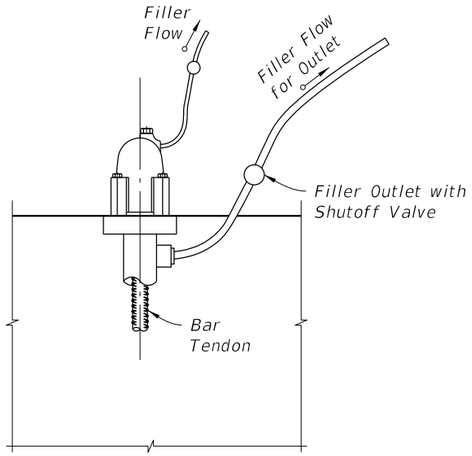

OUTLET END

NOTES:
1. Anchor or Nut to allow for flow of Filler into Cap.
2. Where a vacuum system is connected to an anchorage, connect both the anchorage outlet and the cap outlet to the vacuum system.

FILLER INLET AND OUTLET DETAILS FOR BAR TENDONS

(VERTICALLY ORIENTED TENDON SHOWN; HORIZONTALLY ORIENTED TENDON SIMILAR)

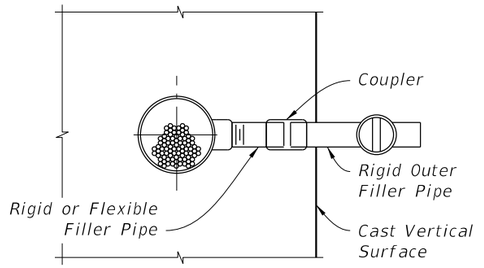

1 FILLER OUTLET CONNECTION TO TENDON

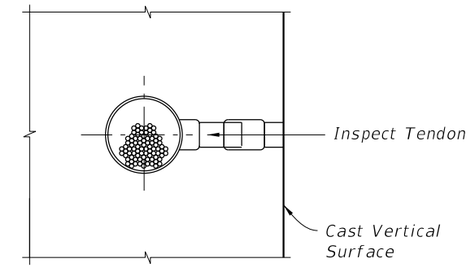

2 POCKET PREPARATION

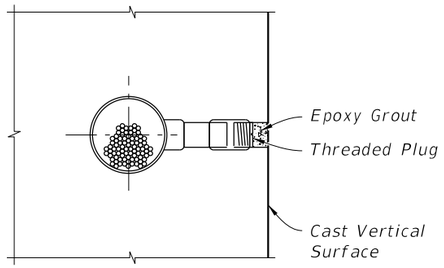

3 FILLING POCKET

PROCEDURE:
1. Remove Rigid Filler Pipe or drill Grout in flexible pipe.
2. Inspect tendon for voids.
3. Vacuum inject as required. If grout is used, allow grout to cure. If flexible filler is used, replace filler displaced by inspection. Remove pipe used for vacuum injecting.
4. Install Threaded Plug into Outlet to form a tight fit.
5. Over-ream hole (¼" Ø over-ream). Clean and roughen sides.
6. Fill pocket with epoxy grout.

FILLER OUTLET DETAIL AT VERTICAL SURFACES

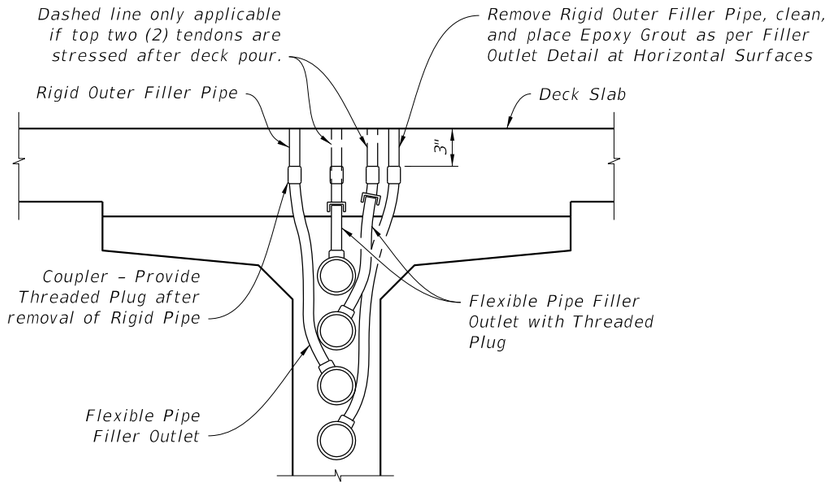

TENDONS AT HIGH POINTS AND
3' FROM HIGH POINTS (FILLER OUTLET)

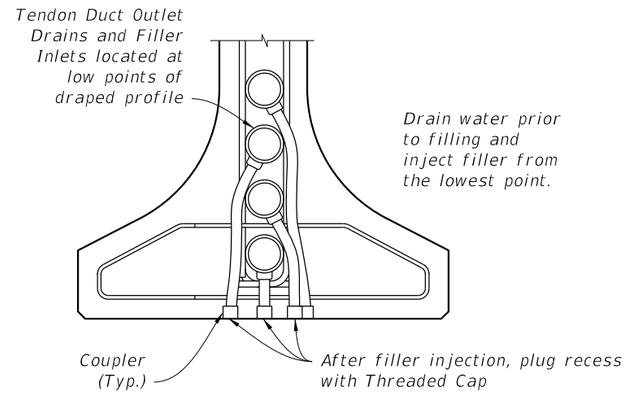

TENDONS AT LOW POINTS
(FILLER INLET / DRAIN)

FILLER INLET AND OUTLET DETAILS FOR I-GIRDERS

DETAILS FOR C.I.P. BOXES WITH INTERNAL TENDONS SIMILAR. WEB REINFORCING NOT SHOWN FOR CLARITY.

9:23:02 AM

9/23/2021

LAST REVISION	REVISION	DESCRIPTION:	FDOT	FY 2022-23 STANDARD PLANS	POST-TENSIONING ANCHORAGE AND TENDON FILLING DETAILS	INDEX	SHEET
11/01/16						462-003	2 of 2

GENERAL NOTES:

U.S. COAST GUARD NOTIFICATION: Notify the local office of the U.S. Coast Guard at least 30 days prior to beginning of construction of the Fender System.

14" SQUARE PRESTRESSED CONCRETE PILES – Provide 14" Square Prestressed Concrete Piles of sufficient length to achieve a minimum embedment of 20' into soil having a blow count greater than or equal to 6 (N ≥ 6). Pile splices and build-ups are not permitted. Use only 14" Square Prestressed Concrete Piles with 8 – ½" diameter Low Relaxation Strands fabricated in accordance with Index 455-014.

PLASTIC LUMBER AND STRUCTURAL COMPOSITE LUMBER WALES: Provide only Plastic Lumber (Thermoplastic Structural Shapes) and Structural Composite Lumber (Reinforced Thermoplastic Structural Shapes) Wales in accordance with Specification Section 973. Wales shall be continuous and spliced only at locations shown on the plans.

PLASTIC LUMBER DECKING FOR CATWALKS: Provide Plastic Lumber decking for catwalks when called for in the Plans in accordance with Specification Section 973.

Install Plastic Lumber Decking according to manufacturer's recommendations using stainless steel #10 x 3" (minimum) deck screws.

FIBERGLASS OPEN GRATING FOR CATWALKS: Provide Fiberglass Open Grating for catwalks when called for in the Plans. Fiberglass Open Grating shall be a heavy duty design suitable for exterior installations. Maximum gap opening on the walkway surface shall be 1½". Design live loads and deflections shall be a 50 psf uniformly distributed load with a maximum deflection of ⅜" or L/120 at the center of a simple span and a concentrated load of 250 pounds with a maximum deflection of ¼" at the center of a simple span. Color of Fiberglass Open Grating shall be gray or black.

Install Fiberglass Open Grating according to manufacturer's recommendations using stainless steel hardware, screws, bolts, nuts and washers. Attach Fiberglass Open Grating to Wales and Deck Supports at a 2'-0" maximum spacing so as to resist pedestrian live loads and uplift forces from wind, buoyancy and wave action.

CLEARANCE GAUGE AND LIGHT: Clearance Gauge to be furnished and installed by the Contractor. Clearance Gauge width and numeral height is dependent on visibility distance. The required visibility distance shall be determined by the United States Coast Guard District Commander. Provide and install Clearance Gauge Light in accordance with Specification Section 510 and Index 510-001.

NAVIGATION LIGHTS: Provide and install Navigation Lights in accordance with Specification Section 510, Index 510-001 and/or project specific details. Provide and maintain Temporary Navigation Lights during construction until permanent Navigation Lights are operational.

BOLTS, THREADED BARS, NUTS, SCREWS AND WASHERS: Furnish stainless steel Bolts in accordance with ASTM F593 Type 316. Furnish stainless steel Threaded Bars in accordance with ASTM A193 Grade B8M. Furnish stainless steel Nuts in accordance with ASTM F594 Type 316. Furnish stainless steel Screws in accordance with ASTM F593 Type 305. Furnish stainless steel Washers compatible with Bolts, Threaded Rods and Nuts under heads and nuts. Torque Nuts on 1" diameter Bolts and Threaded Bars to 150 lb-ft. Keep threads on Bolts, Threaded Bars and Nuts free from dirt, coarse grime and sand to prevent galling and seizing during tightening.

SPLICE PLATES: Furnish Splice Plates in accordance with ASTM A240 Type 316.

WIRE ROPE: Provide wire rope meeting one of the following requirements:

1. ½" diameter 6x19, 6x25 or 6x37 class IWRC Type 316 stainless steel wire rope with a minimum breaking strength of 18,000 lbs.

2. ½" diameter 6x19 galvanized wire rope with ultraviolet ray resistant polypropylene impregnation having an outside diameter of 5/8" with a minimum breaking strength of 22,000 lbs. Protect all ends with heat shrinkable end caps compatible with the rope's polypropylene that provide an effective water-tight seal.

FENDER SYSTEM ENERGY CAPACITY:
Energy Capacity = 38 ft-k

GENERAL NOTES

9/23/2021 9:08:47 AM

LAST REVISION	REVISION	DESCRIPTION:	FDOT	FY 2022-23 STANDARD PLANS	FENDER SYSTEM - PRESTRESSED CONCRETE PILES & FRP WALES	INDEX	SHEET
07/01/14						471-030	1 of 7

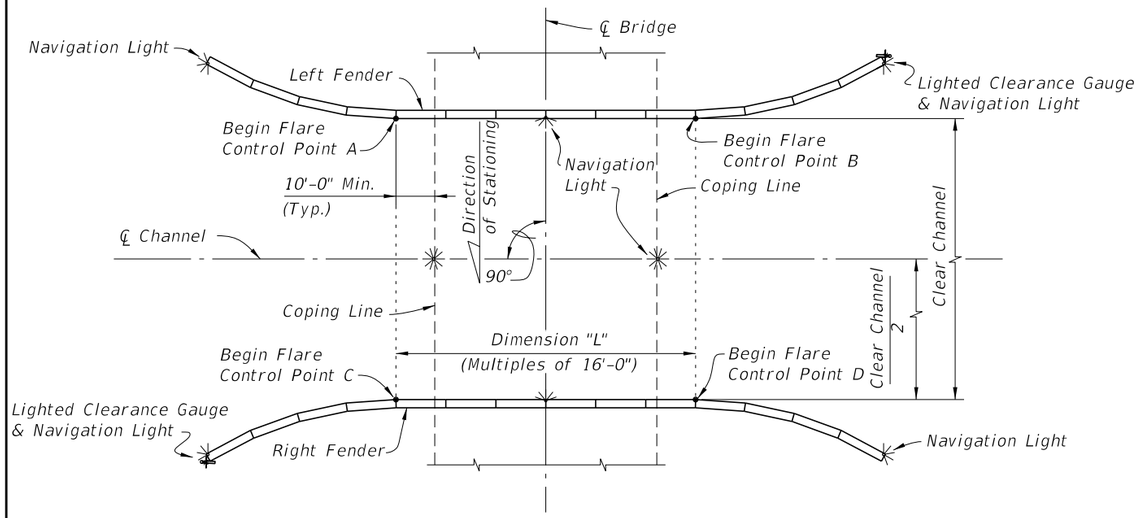

SCHEMATIC OF FENDER SYSTEM SHOWING TREATMENT OF SINGLE FIXED BRIDGE WITH NONSKEWED CHANNEL

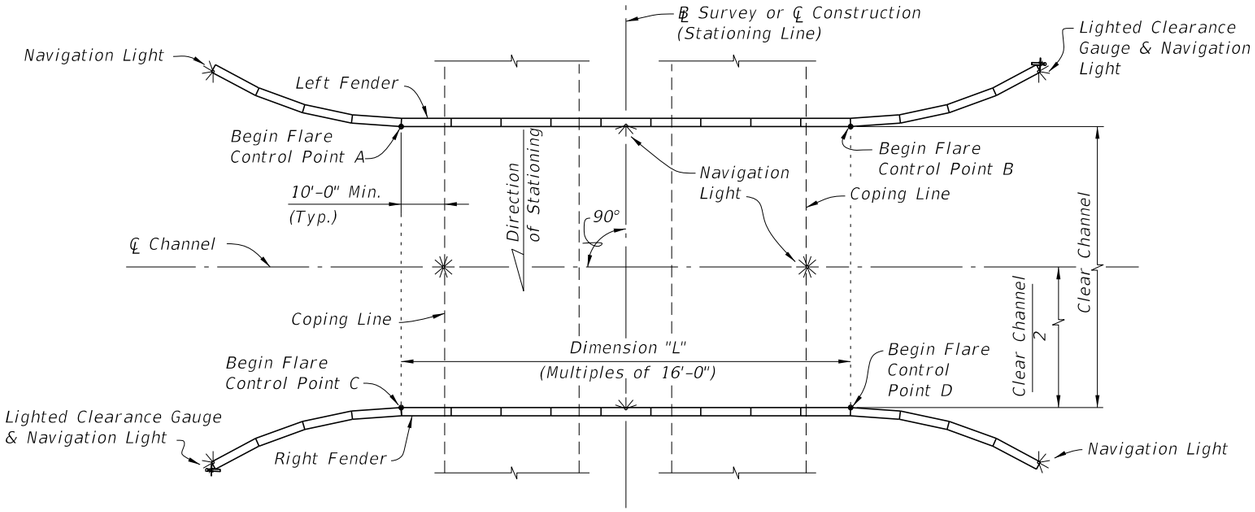

SCHEMATIC OF FENDER SYSTEM SHOWING TREATMENT OF DUAL FIXED BRIDGES WITH NONSKEWED CHANNEL (PARALLEL DUAL FIXED BRIDGES SHOWN, NONPARALLEL DUAL FIXED BRIDGES SIMILAR)

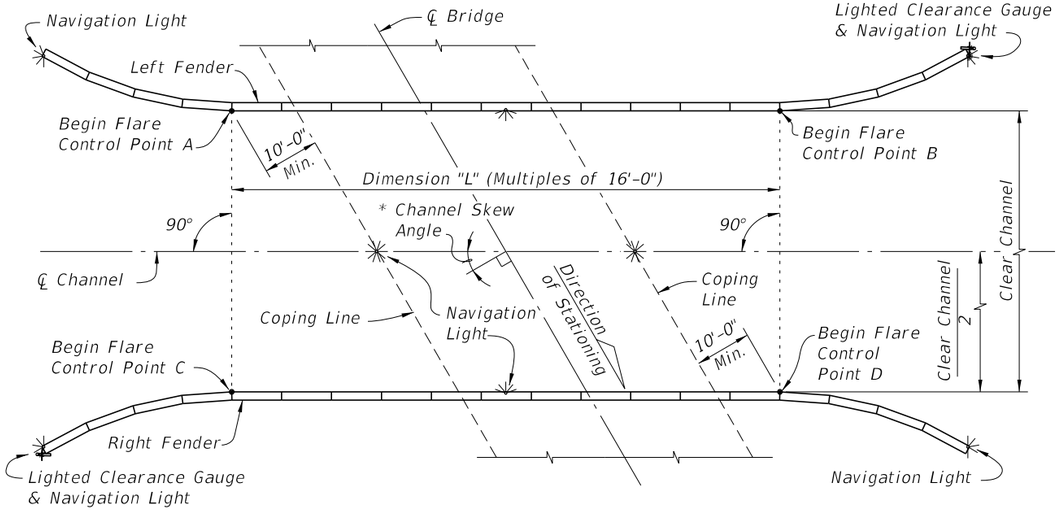

SCHEMATIC OF FENDER SYSTEM SHOWING TREATMENT OF SINGLE FIXED BRIDGE WITH SKEWED CHANNEL

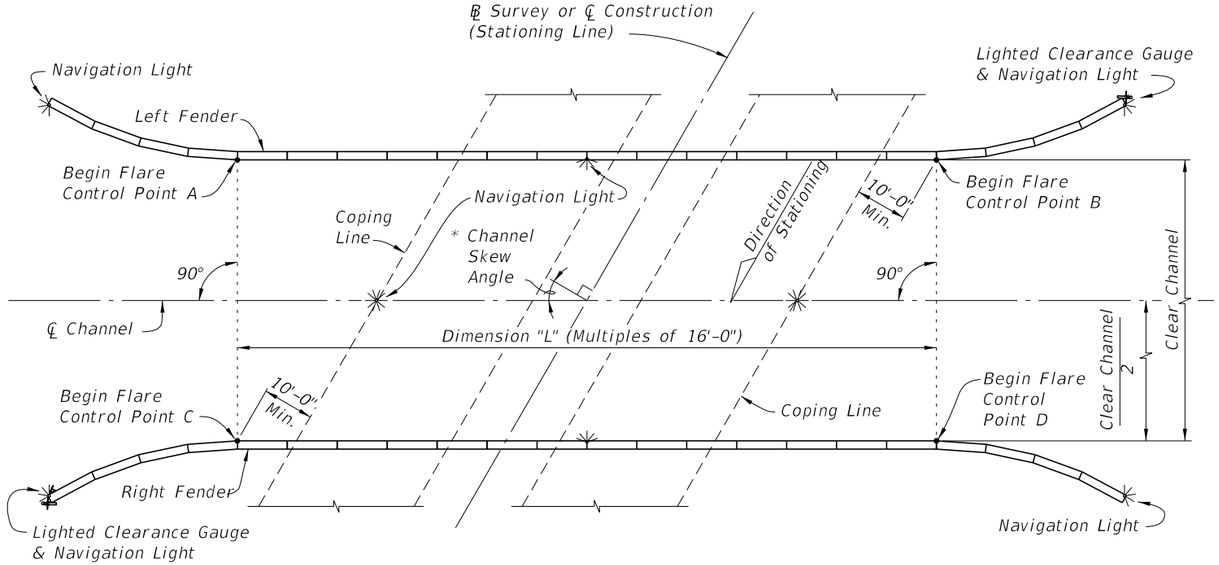

SCHEMATIC OF FENDER SYSTEM SHOWING TREATMENT OF DUAL FIXED BRIDGES WITH SKEWED CHANNEL (PARALLEL DUAL FIXED BRIDGES SHOWN, NONPARALLEL DUAL FIXED BRIDGES SIMILAR)

* See Structures Plans, Plan and Elevation and Foundation Layout Sheets for magnitude and orientation of Channel Skew Angle.

CROSS REFERENCES:
For Stations and Offsets of referenced Control Points A, B, C and D, Dimension "L" and Clear Channel Width see Fender System Table of Variables in Structures Plans.
For Navigation Light Details see Design Standards Index 510-001.

LAYOUT GEOMETRY

9:08:48 AM
9/23/2021

LAST REVISION	REVISION	DESCRIPTION:			INDEX	SHEET
07/01/11			FY 2022-23 STANDARD PLANS	FENDER SYSTEM - PRESTRESSED CONCRETE PILES & FRP WALES	471-030	2 of 7

CROSS REFERENCES:

For Sections A–A and B–B see Sheet 4.

For View F–F see Sheet 5.

NOTE:
Plastic Lumber and Composite Lumber Dimensions shown are based on Nominal Lumber Dimensions and may vary depending on Actual Lumber Dimension.

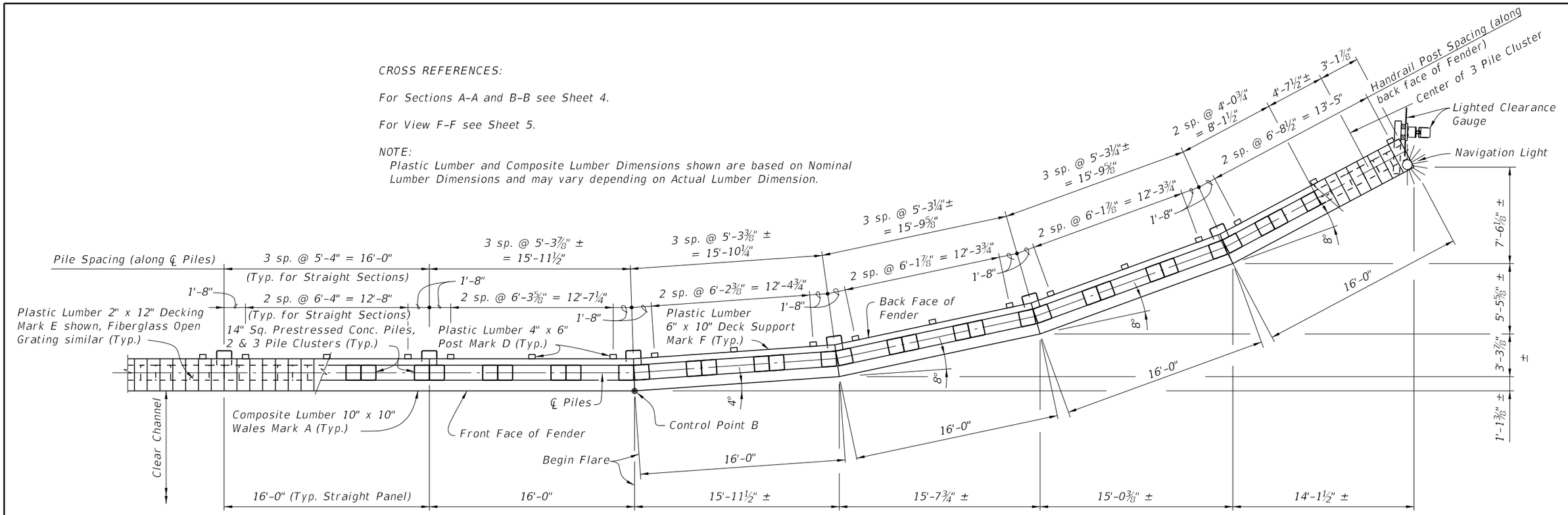

PARTIAL PLAN VIEW (TYPICAL FLARE)
(FLARE AT CONTROL POINT B SHOWN, CONTROL POINTS A, C & D SIMILAR)
(HANDRAIL NOT SHOWN FOR CLARITY)

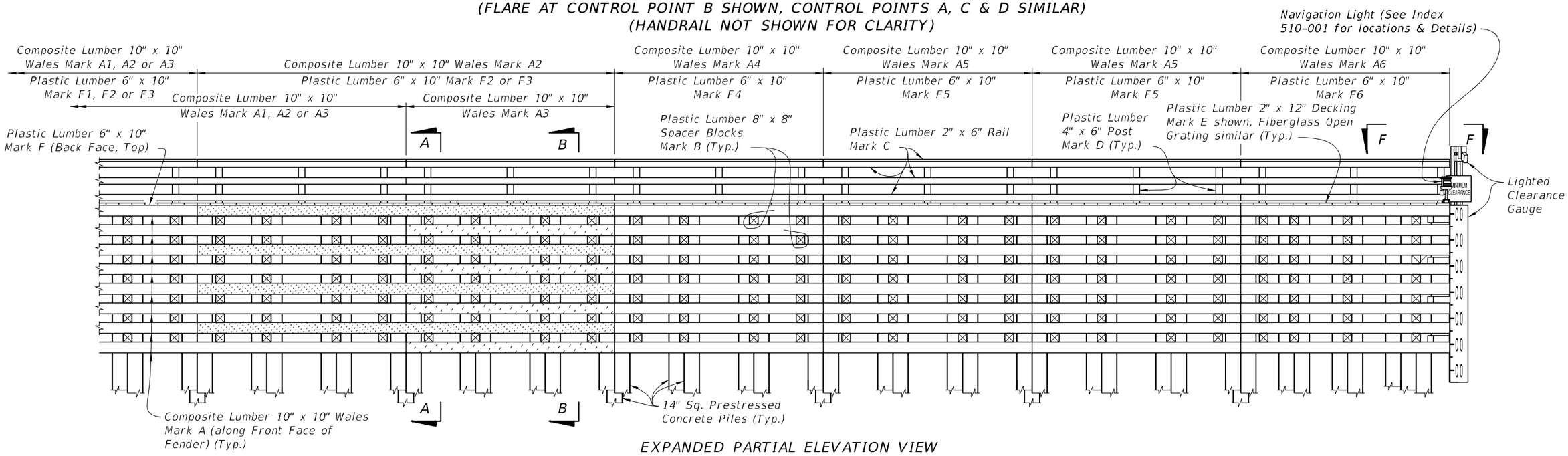

EXPANDED PARTIAL ELEVATION VIEW

9:08:49 AM
9/23/2021

LAST REVISION	REVISION	DESCRIPTION:	FDOT	FY 2022-23 STANDARD PLANS	FENDER SYSTEM - PRESTRESSED CONCRETE PILES & FRP WALES	INDEX	SHEET
01/11/17						471-030	3 of 7

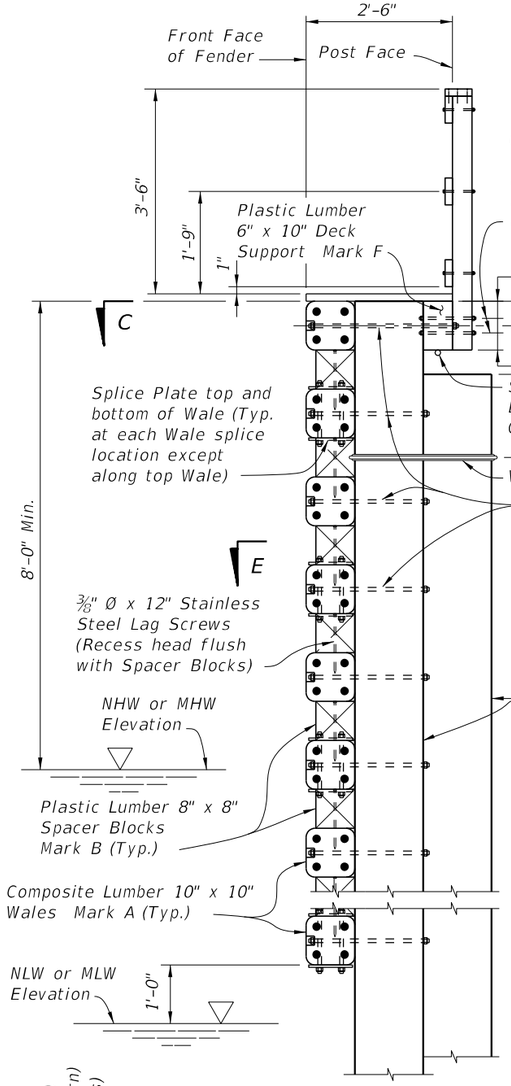

SECTION A-A

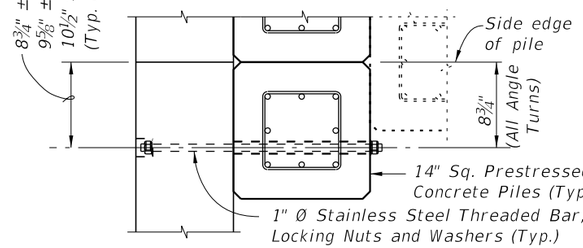

DETAIL "B" (SHOWING THREADED BAR LOCATION/RELATIONSHIP TO PILE PRESTRESSING STRANDS)

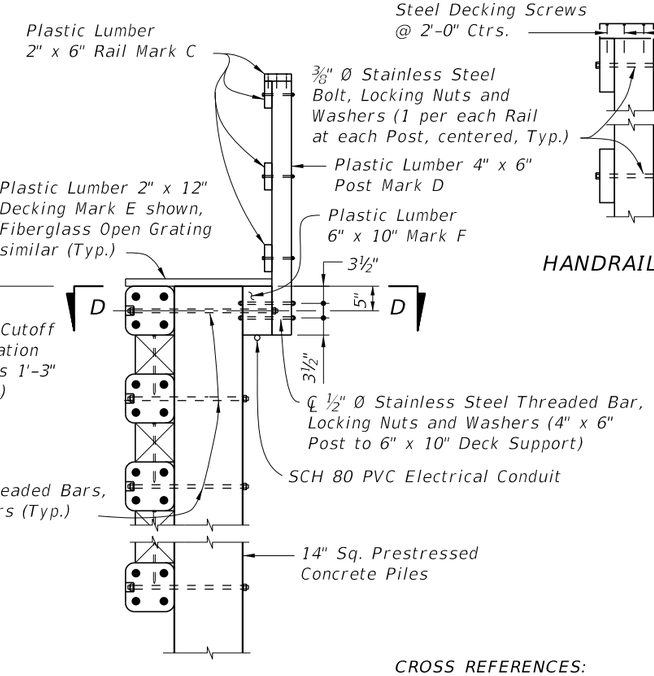

SECTION B-B

HANDRAIL DETAIL

CROSS REFERENCES:
For location of Sections A-A and B-B see Sheet 3.

For Section E-E and Detail "A" see Sheet 5.

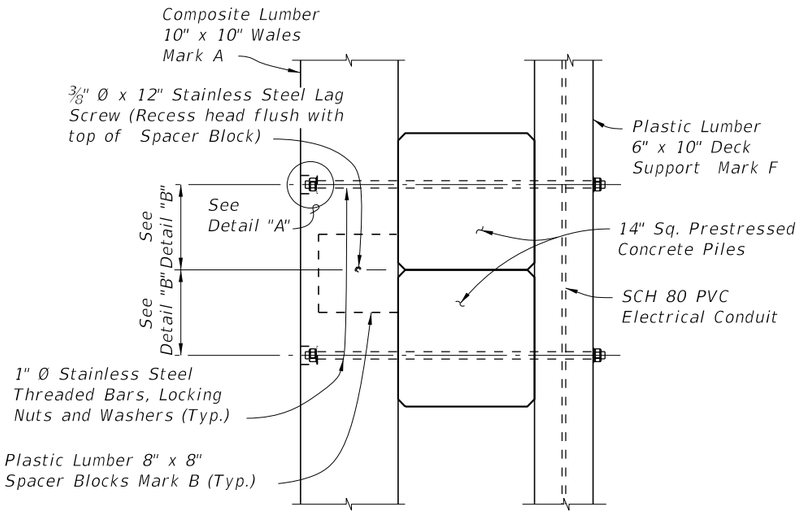

SECTION D-D
TYPICAL AT INTERMEDIATE PILES

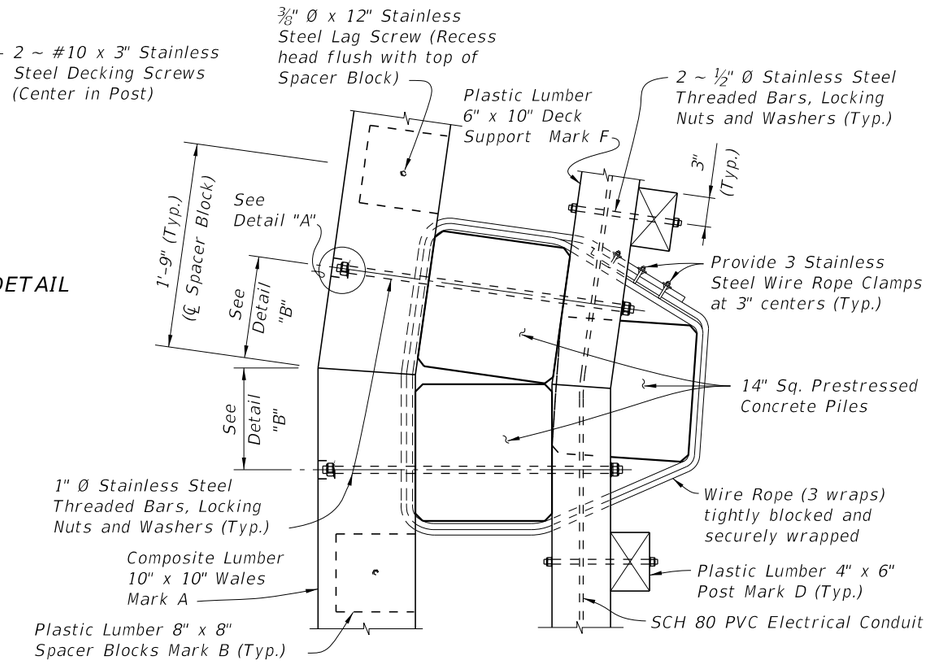

SECTION C-C
TYPICAL FLARED SECTION
(8° TURN SHOWN, 4° TURN SIMILAR)

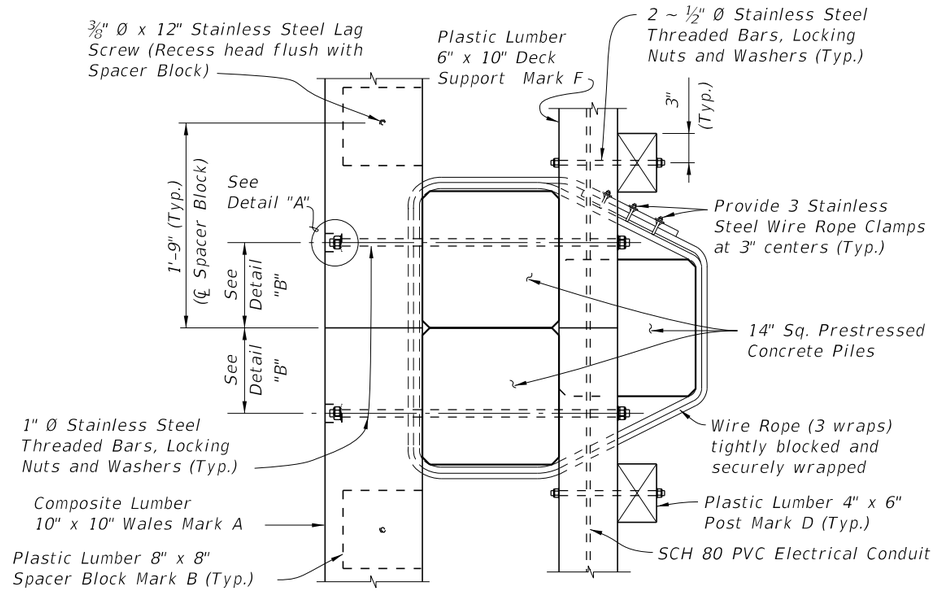

SECTION C-C
TYPICAL STRAIGHT SECTION

9:08:51 AM
9/23/2021

LAST REVISION	REVISION	DESCRIPTION:	FDOT	FY 2022-23 STANDARD PLANS	FENDER SYSTEM - PRESTRESSED CONCRETE PILES & FRP WALES	INDEX	SHEET
01/01/12						471-030	4 of 7

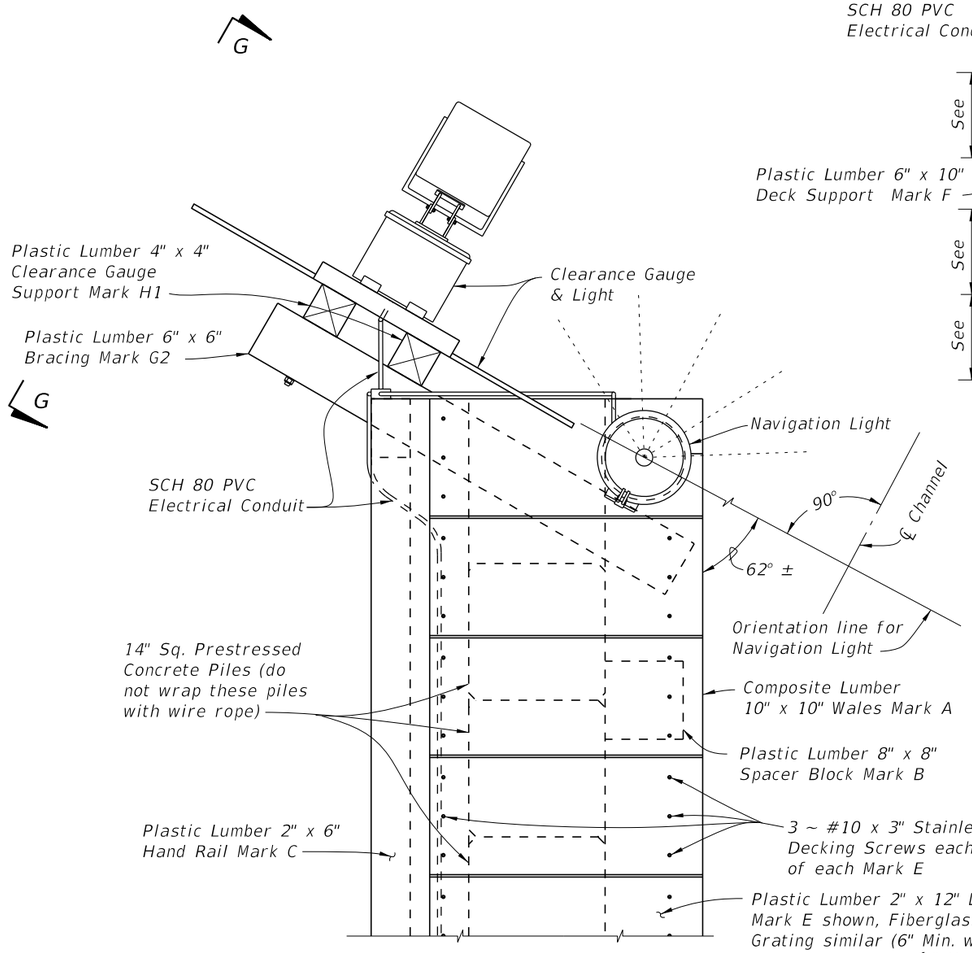

VIEW F-F
(SHOWING FENDER END WITH CLEARANCE GAUGE)

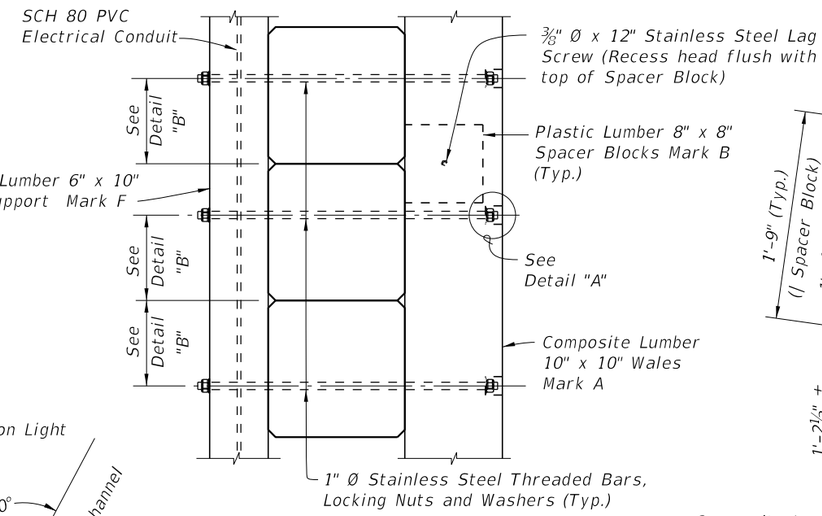

PARTIAL VIEW F-F
(SHOWING FENDER END; DECKING
AND HANDRAIL NOT SHOWN
FOR CLARITY)

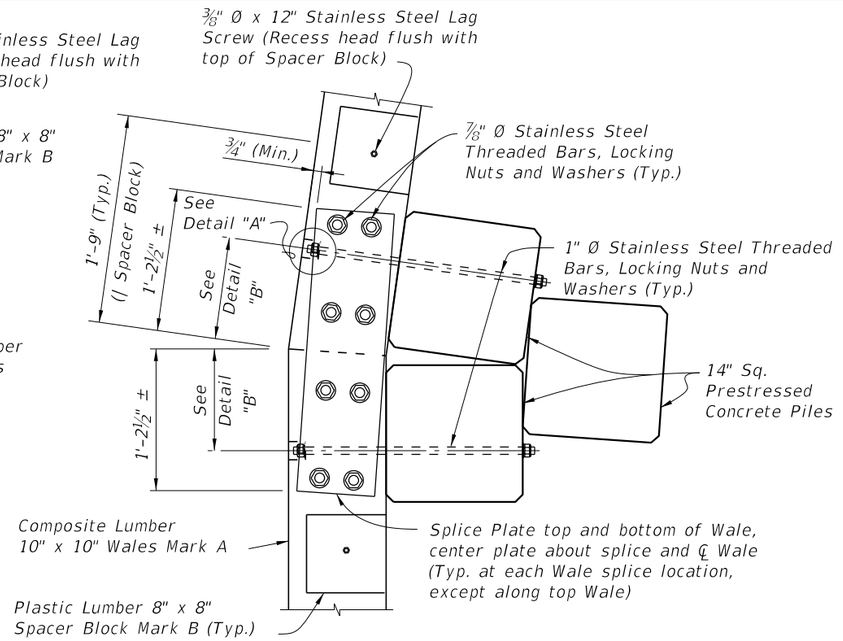

SECTION E-E
TYPICAL FLARED SECTION
(8° TURN SHOWN, 4° TURN SIMILAR)

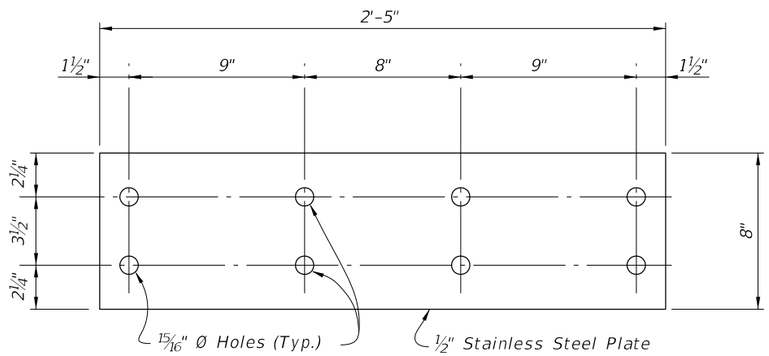

SPLICE PLATE DETAIL

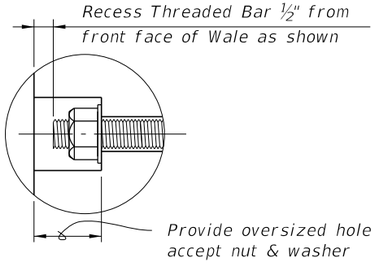

DETAIL "A"

CROSS REFERENCES:

For Navigation Lights and SCH 80 PVC Electrical Conduit Details see Index 510-001.

For View G-G and Clearance Gauge Details see Sheet 4.

For Detail "B" and location of Section E-E see Sheet 2.

For location of View F-F see Sheet 1.

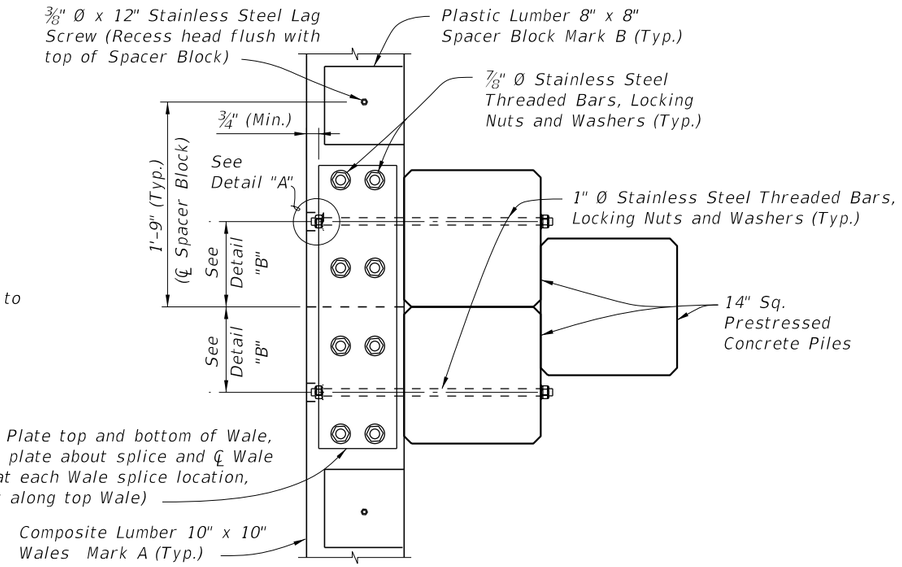

SECTION E-E
TYPICAL STRAIGHT SECTION

9:08:57 AM
9/23/2021

LAST REVISION	REVISION	DESCRIPTION:				
07/01/11			FY 2022-23 STANDARD PLANS	FENDER SYSTEM - PRESTRESSED CONCRETE PILES & FRP WALES	INDEX 471-030	SHEET 5 of 7

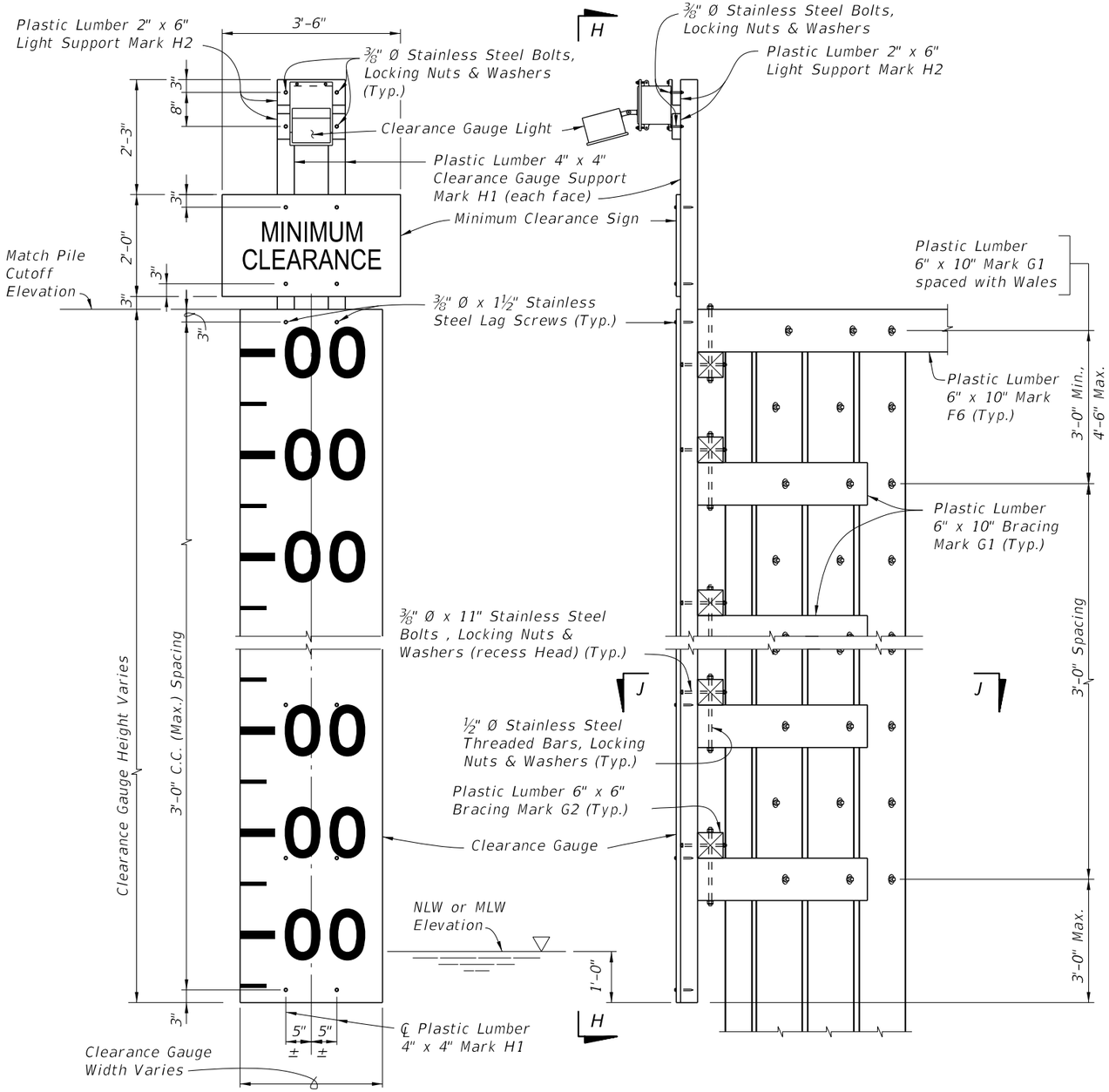

VIEW H-H
(WALES, PILES AND BRACING
NOT SHOWN FOR CLARITY)

VIEW G-G
(WALES, DECKING AND HANDRAIL
NOT SHOWN FOR CLARITY)

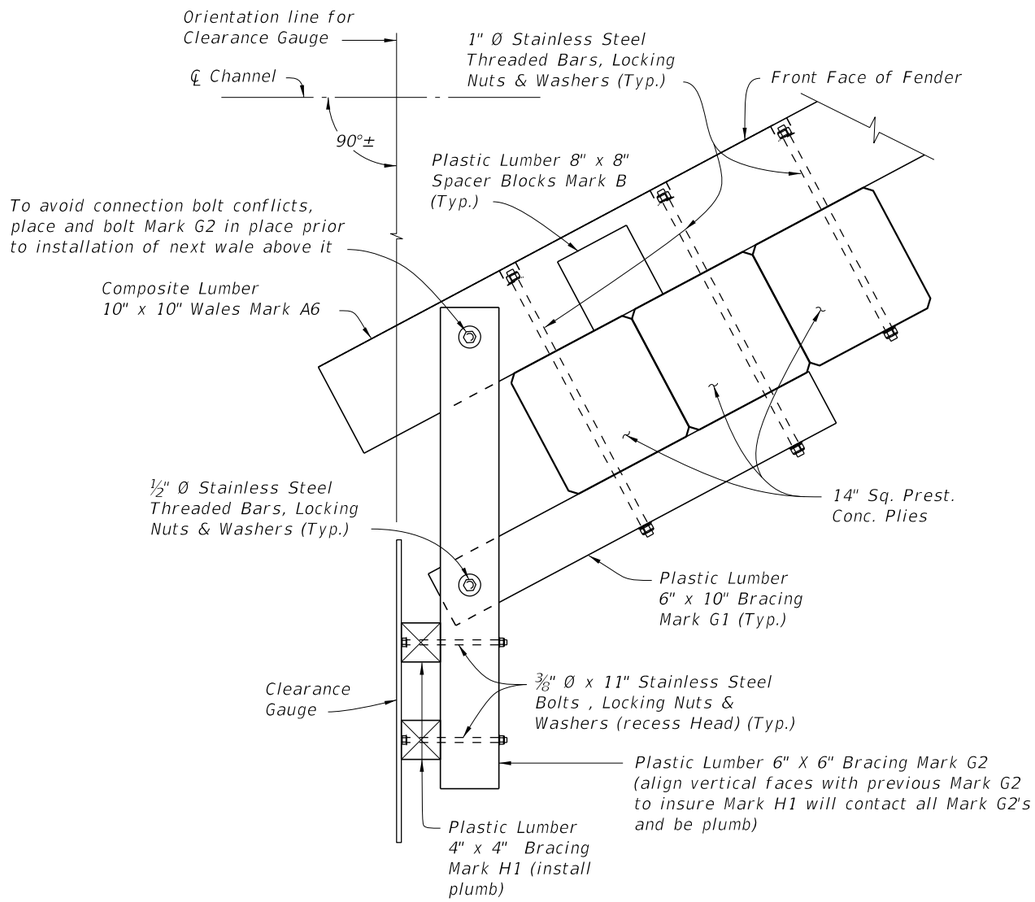

SECTION J-J

CROSS REFERENCES:

For Estimated Structural Composite and Plastic Lumber Bill of Materials Quantities and Fender System Table of Variables see Structures Plans.

For location of View G-G see Sheet 5.

CLEARANCE GAUGE DETAILS

9:08:58 AM

9/23/2021

LAST REVISION	REVISION	DESCRIPTION:				
01/01/12			FDOT FY 2022-23 STANDARD PLANS	FENDER SYSTEM - PRESTRESSED CONCRETE PILES & FRP WALES	INDEX 471-030	SHEET 6 of 7

* STRUCTURAL COMPOSITE LUMBER BILL OF MATERIALS

MARK	SIZE (NOMINAL)	DIMENSIONS	BOARD FT. PER EACH	NO. REQD.	QUANTITY
A1	10" X 10" COMPOSITE LUMBER	32'-0" (STRAIGHT)	266.6	See Estimated Structural Composite and Plastic Lumber Bill of Materials Table in Structures Plans	
A2	10" X 10" COMPOSITE LUMBER	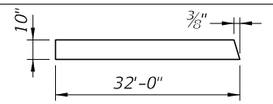	266.6		
A3	10" X 10" COMPOSITE LUMBER	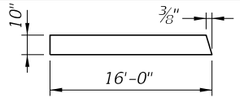	133.3		
A4	10" X 10" COMPOSITE LUMBER	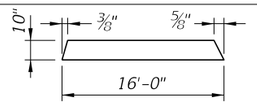	133.3		
A5	10" X 10" COMPOSITE LUMBER	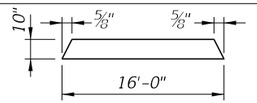	133.3		
A6	10" X 10" COMPOSITE LUMBER	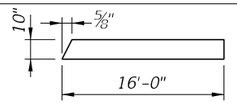	133.3		

* All Plastic Lumber and Composite Lumber Dimensions and Quantities shown are based on Nominal Lumber Dimensions and may vary depending on Actual Lumber Dimension.

** Provide Fiberglass Open Grating in lieu of 2" X 12" Plastic Lumber when called for in the Plans. Mounting hardware shall be Stainless Steel, install per Manufacturer's recommendations. See Structures Plans for Notes and Details.

* PLASTIC LUMBER BILL OF MATERIALS

MARK	SIZE (NOMINAL)	DIMENSIONS	BOARD FT. PER EACH	NO. REQD.	QUANTITY
B	8" X 8" PLASTIC LUMBER	8" (STRAIGHT)	3.6	See Estimated Structural Composite and Plastic Lumber Bill of Materials Table in Structures Plans	
C	2" X 6" PLASTIC LUMBER	16'-0" (STRAIGHT) (Trim & Miter Ends as required)	16.0		
D	4" X 6" PLASTIC LUMBER	4'-4" (STRAIGHT)	8.7		
** E	2" X 12" PLASTIC LUMBER	2'-6" (STRAIGHT) (Miter as required, 6" Min. width)	5.0		
F1	6" X 10" PLASTIC LUMBER	32'-0" (STRAIGHT)	160.0		
F2	6" X 10" PLASTIC LUMBER	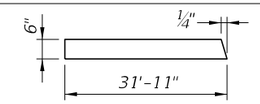	159.6		
F3	6" X 10" PLASTIC LUMBER	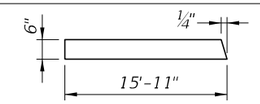	79.6		
F4	6" X 10" PLASTIC LUMBER	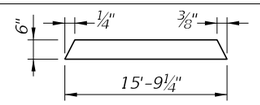	78.8		
F5	6" X 10" PLASTIC LUMBER	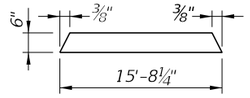	78.4		
F6	6" X 10" PLASTIC LUMBER	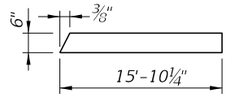	79.3		
G1	6" X 10" PLASTIC LUMBER	3'-8" (STRAIGHT)	18.3		
G2	6" X 6" PLASTIC LUMBER	4'-1" (STRAIGHT)	12.3		
H1	4" X 4" PLASTIC LUMBER	PILE CUTOFF ELEV. MINUS NLW OR MLW ELEV. PLUS 5'-6" (STRAIGHT)	1.3 PER LF EACH		
H2	2" X 6" PLASTIC LUMBER	1'-2" (STRAIGHT)	1.2		

9:08:59 AM

9/23/2021

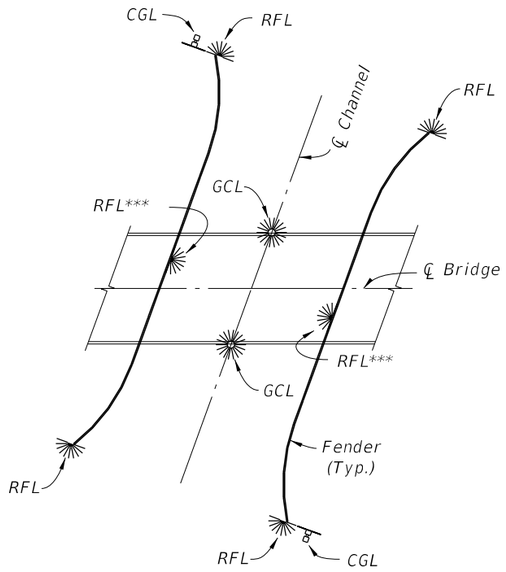

NAVIGATION LIGHT SYSTEM SCHEMATIC
FOR SINGLE BRIDGE WITH FENDERS

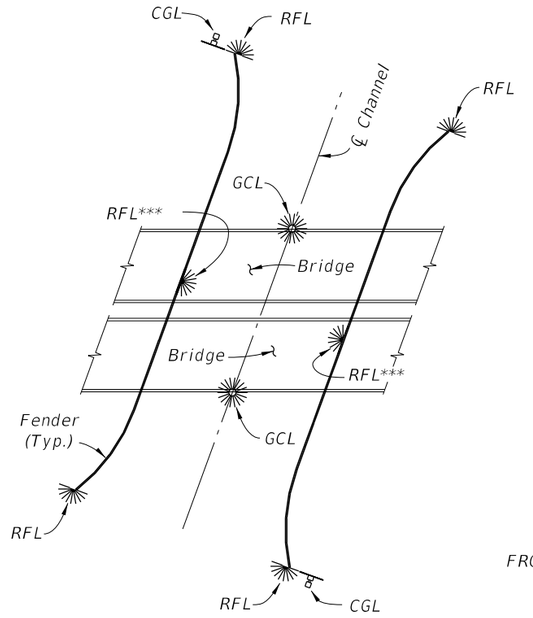

NAVIGATION LIGHT SYSTEM SCHEMATIC
FOR DUAL BRIDGES WITH FENDERS

NAVIGATION LIGHT NOTES:

1. *Provide Navigation Light System in compliance with Specifications Section 510.*

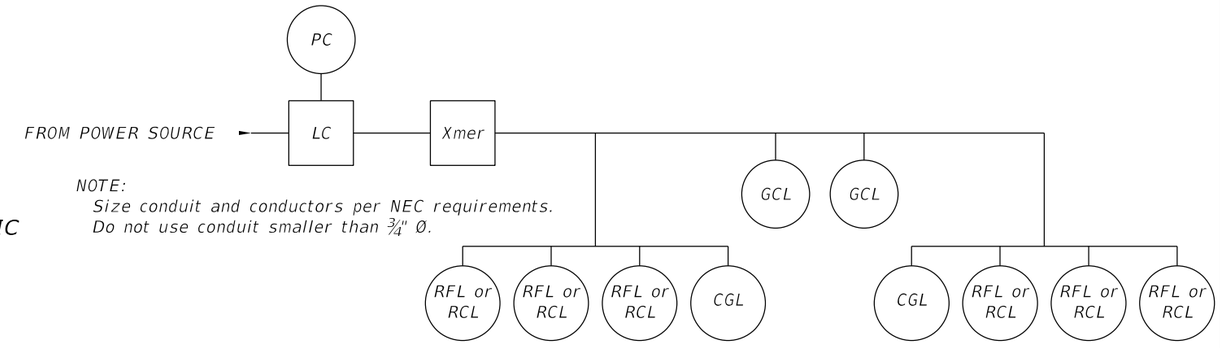

NOTE:
Size conduit and conductors per NEC requirements.
Do not use conduit smaller than ¾" Ø.

TYPICAL ELECTRICAL SCHEMATIC DIAGRAM

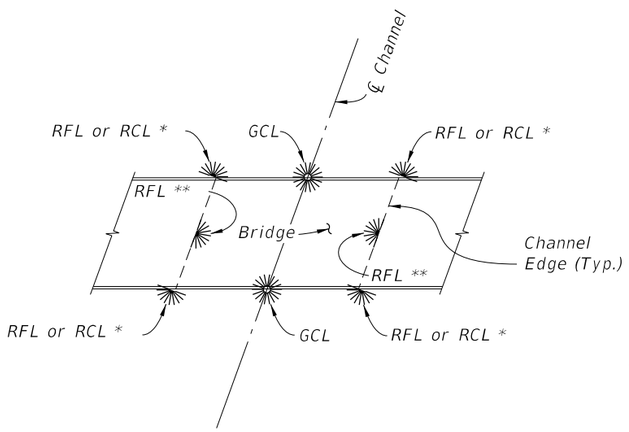

NAVIGATION LIGHT SYSTEM SCHEMATIC
FOR SINGLE BRIDGE WITHOUT FENDERS

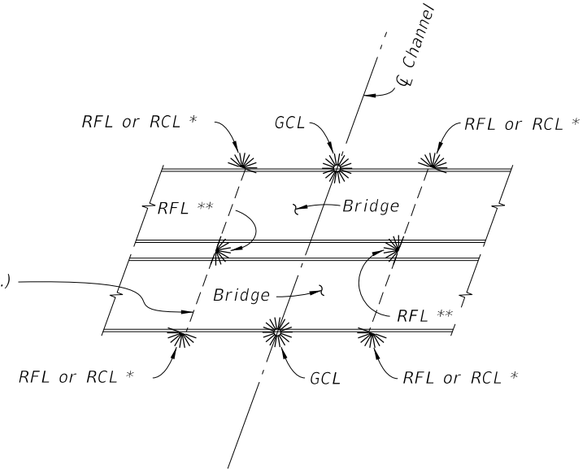

NAVIGATION LIGHT SYSTEM SCHEMATIC
FOR DUAL BRIDGES WITHOUT FENDERS

POWER CONDUCTORS			
DISTANCE (feet)	VOLTS	CONDUCTOR	TRANSFORMER
0 – 75	120	#12 AWG	N/A
75 – 500	120 or 240	#10 AWG	N/A
500–1000	240	#10 AWG	N/A
1000–2000	480	#10 AWG	2 KVA
2000–5000	480	#8 AWG	2 KVA
5000–10000	480	#6 AWG	2 KVA
over 10000	480	#4 AWG	2 KVA

LEGEND

SYMBOL		DESCRIPTION
	LC	Lighting Contactor
	PC	Photocell Control
	Xmer	Transformer (If Required)
	RFL or RCL	Red Pier/Fender Light (180° visibility)
		Red Channel Margin Light (180° visibility)
	GCL	Green Center Channel Light (360° visibility)
	CGL	Clearance Gauge Light
	CM	Channel Margin or Pier inner surface whichever defines Channel Edge.

* Use RFL when Pier is at Channel Edge and see CFR, Title 33, part 118 for Mounting Height restrictions. Use RCL otherwise.
** Mounted only on the Pier that defines CM, otherwise does not apply.
*** RFL to be located at mid length of straight portion of fender.

9:15:13 AM
9/23/2021

LAST REVISION	REVISION	DESCRIPTION:			INDEX	SHEET
11/01/17			FDOT	FY 2022-23 STANDARD PLANS	510-001	1 of 2

NAVIGATION LIGHT SYSTEM DETAILS
(FIXED BRIDGES)

CROSS REFERENCES:
1. For Navigation Light System notes and legend, see Sheet 1.
2. See Utility Conduit Detail sheets for Embedded Junction Box (EJB) dimensions & locations.

* Supplied by Light Fixture Manufacturer

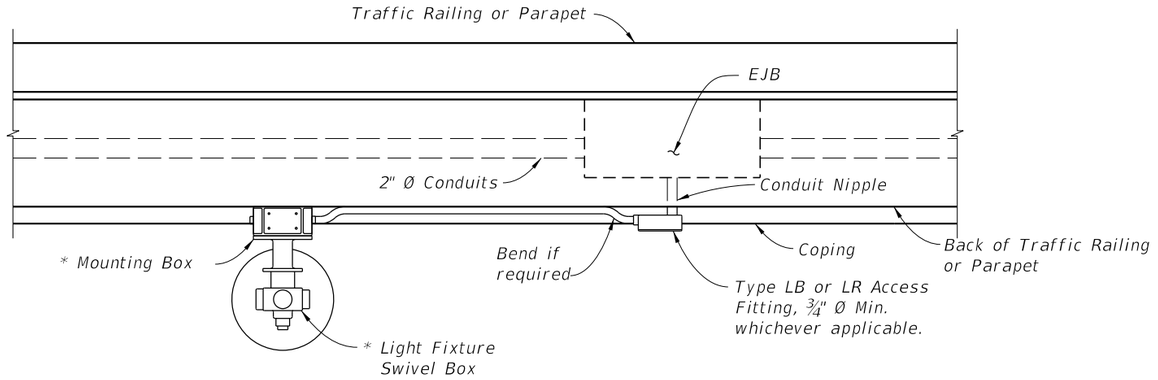

GCL OR RCL MOUNTING DETAILS (SCHEMATIC)
VIEW A-A

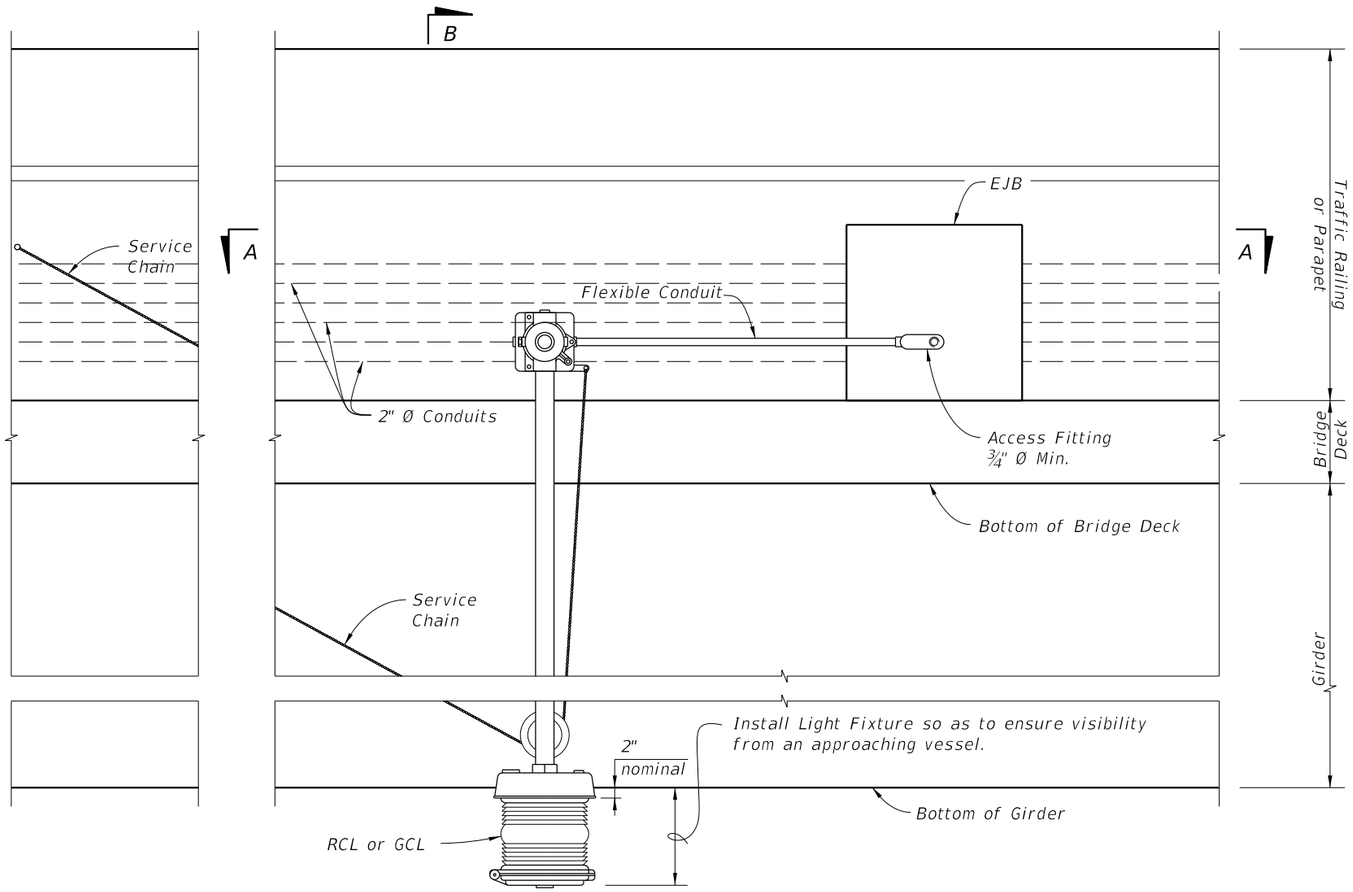

GCL OR RCL MOUNTING DETAILS (SCHEMATIC)
ELEVATION VIEW
(Traffic Railing (36" Single-Slope) shown, other railings similar)

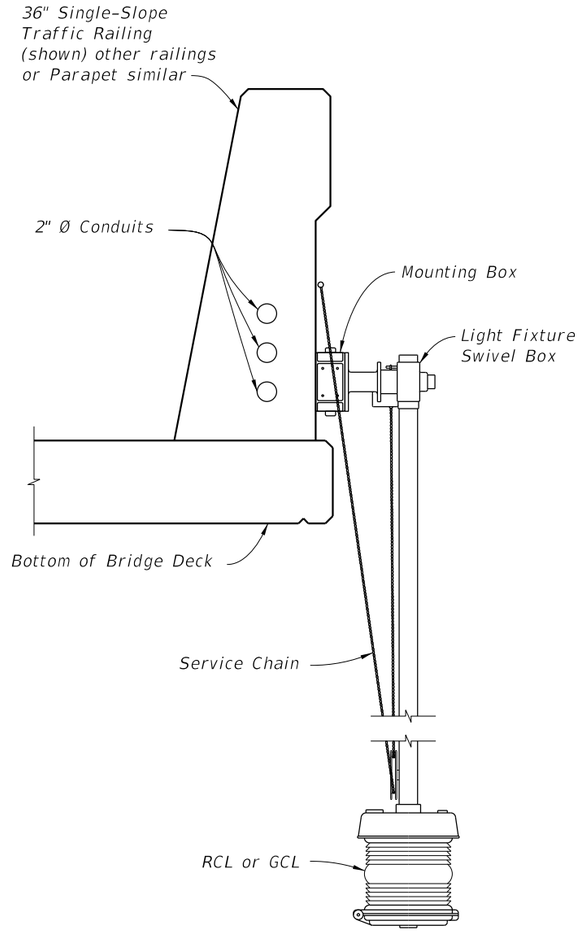

SECTION B-B
TYPICAL POSITION OF RCL OR GCL
RELATIVE TO SUPERSTRUCTURES

9/23/2021 9:15:14 AM

LAST REVISION	REVISION	DESCRIPTION:	FY 2022-23 STANDARD PLANS	NAVIGATION LIGHT SYSTEM DETAILS (FIXED BRIDGES)	INDEX	SHEET
11/01/17					510-001	2 of 2

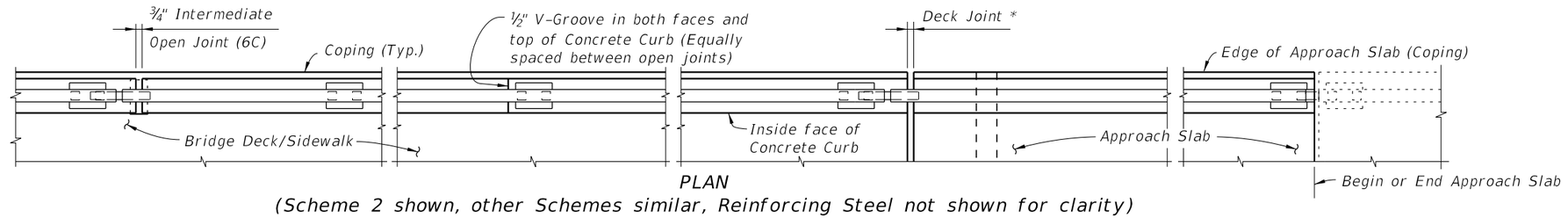

PLAN

(Scheme 2 shown, other Schemes similar, Reinforcing Steel not shown for clarity)

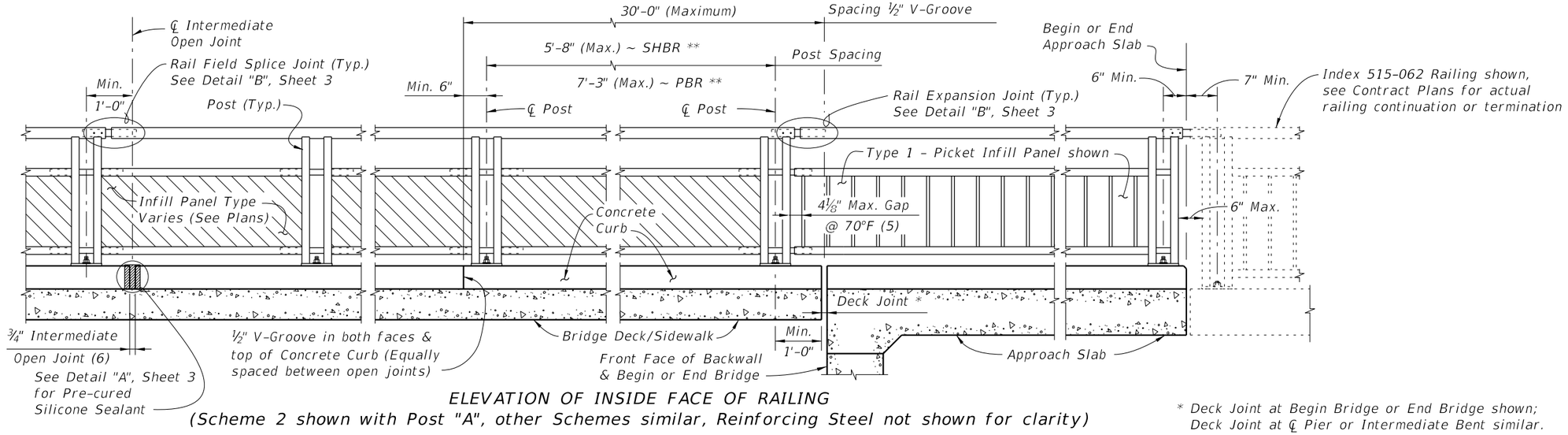

ELEVATION OF INSIDE FACE OF RAILING

(Scheme 2 shown with Post "A", other Schemes similar, Reinforcing Steel not shown for clarity)

* Deck Joint at Begin Bridge or End Bridge shown;
Deck Joint at ℄ Pier or Intermediate Bent similar.

** SHBR ~ Special Height Bicycle Railing
PBR ~ Pedestrian/Bicycle Railing

NOTES:

1. Shop Drawings are required.
2. Work this Index with Index 515-062 Aluminum Bicycle/Pedestrian Railing Details and Specification Section 515. Refer to the IDS for Design Criteria and Limits of Use.
3. Materials:
   - A. Galvanized Steel Fasteners: Hex Head Bolt ASTM A307, Hex Nuts ASTM A563, Washers ASTM F436
   - B. Aluminum:
     - a. Support Bracket (Scheme 3) L-shape and Stiffener Plate: ASTM B209, Alloy 6061-T6
     - b. Bottle-guard (Schemes 1 & 3) L-shape: ASTM B209, Alloy 6061-T6 or 6063-T5
   - C. Concrete: Same as bridge deck
   - D. Pre-cured Silicone Sealant: Specification Section 932
   - E. Bearing Pads: Provide ⅛" thick Plain, Fabric Reinforced or Fabric Laminated pads meeting the requirements of Specification Section 932 for Ancillary Structures.
4. See Structures Plans, Superstructure Sheets for bridge information including concrete type, deck expansion joint locations and orientations, and thermal movement.
5. Railings:
   - A. For thermal movement greater than 4" (up to a maximum of 5"), clear opening between adjacent pickets, or panels at Rail Expansion Joints above Deck Joints must be reduced to 3½".
   - B. For treatment of railings on skewed bridges see Index 521-427.
6. Curbs:
   - A. Match open curb joints at Deck Expansion Joint locations to the deck joint dimension.
   - B. Construct Concrete Curb (Scheme 2) vertical with the top surface finished level transversely. See Concrete Curb Details Sheet 3.
   - C. Provide ¾" Intermediate open joints in curbs coinciding with the ¾" joints in the traffic railing.
7. Payment: Support bracket (Scheme 3) is incidental to the cost of railing. Curb concrete and reinforcing steel (Scheme 2) are included in the bridge deck quantities.

9:17:28 AM

9/23/2021

LAST REVISION	REVISION	DESCRIPTION:	FDOT	FY 2022-23 STANDARD PLANS	BRIDGE PEDESTRIAN/BICYCLE RAILING (ALUMINUM)	INDEX	SHEET
11/01/17						515-061	1 of 3

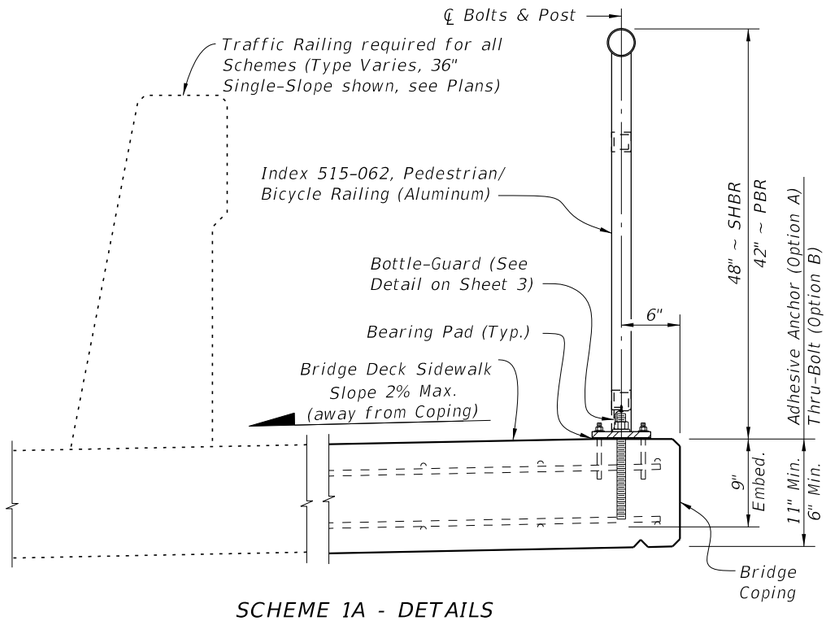

SCHEME 1A - DETAILS
(Adhesive Anchor Option)

CROSS REFERENCE:

See Sheet 1 for Bridge Railing Notes.

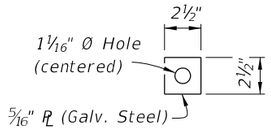

THRU-BOLT PLATE
WASHER DETAIL

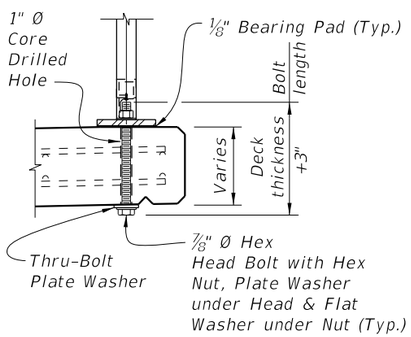

SCHEME 1B - DETAILS
(Thru-Bolt Option)

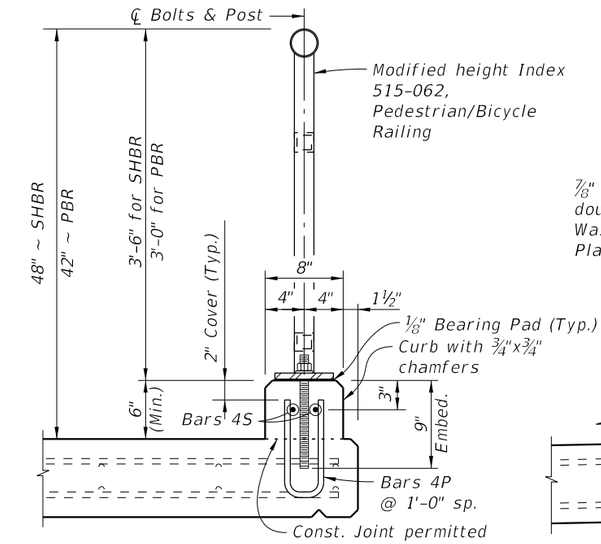

SCHEME 2 -
TYPICAL SECTION THROUGH
CURB MOUNTED RAILING

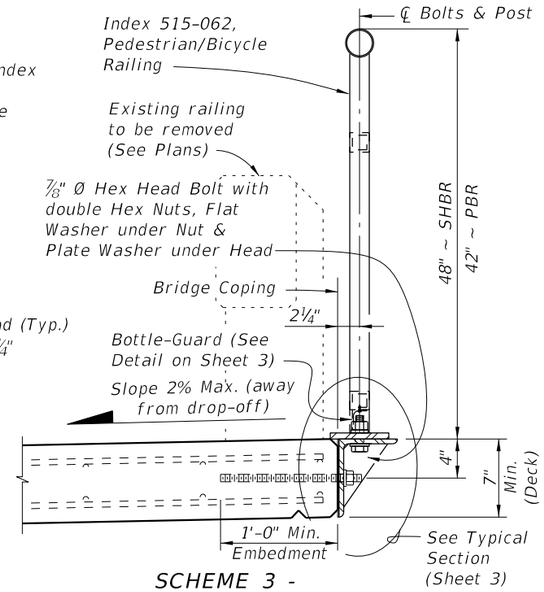

SCHEME 3 -
TYPICAL SECTION THROUGH
SIDE MOUNTED RAILING (RETROFIT)

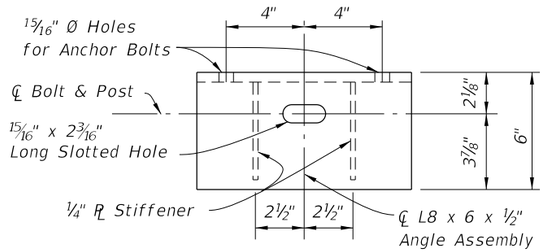

PLAN VIEW

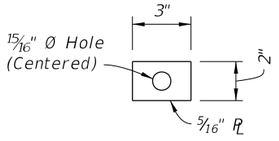

PLATE WASHER DETAIL

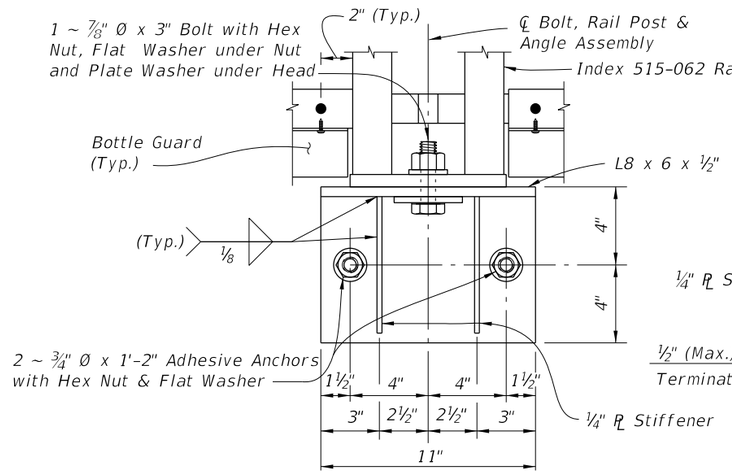

ELEVATION VIEW

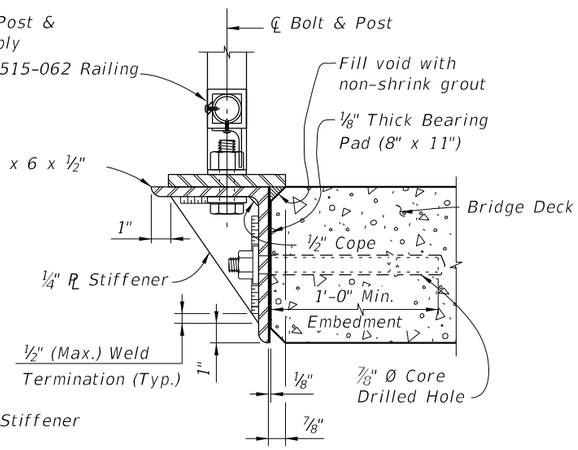

TYPICAL SECTION

SCHEME 1 - TYPICAL SECTION THROUGH DECK MOUNTED RAILING

SCHEME 3 - SIDE-MOUNTED SUPPORT BRACKET DETAILS

9:17:29 AM

9/23/2021

LAST REVISION	REVISION	DESCRIPTION:	FDOT	FY 2022-23 STANDARD PLANS	BRIDGE PEDESTRIAN/BICYCLE RAILING (ALUMINUM)	INDEX	SHEET
11/01/17						515-061	2 of 3

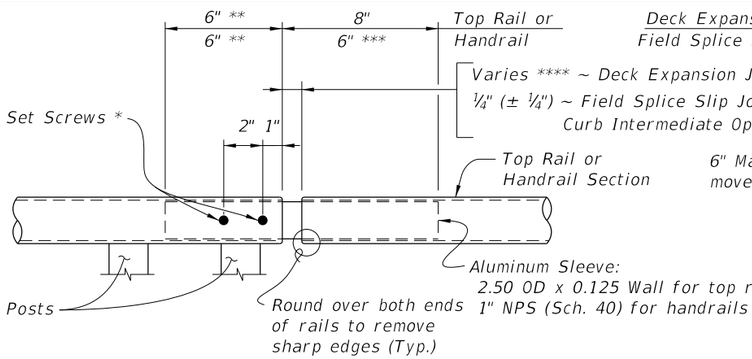

ROUND RAILS - TOP RAIL OR HANDRAIL

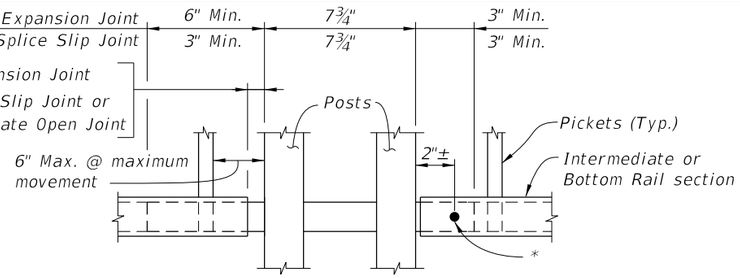

SQUARE RAILS - INTERMEDIATE OR BOTTOM RAIL

* ¼" Ø x ¾" Pan Head Aluminum (Alloy 7075-T73) or Stainless Steel (Type 316 or 18-8 Alloy) Set Screws along outside face of railing. Set screws must be set flush against the rail surface. A ¾" Ø plug weld may be substituted for the two set screws at expansion joints.

** Embedded length may be 4" for plug welded connection.

*** Increase handrail sleeve embedment to 8" for Expansion Joint openings greater than 2".

**** Expansion Joint opening shall match the clear opening in the deck joint but not greater than 3".

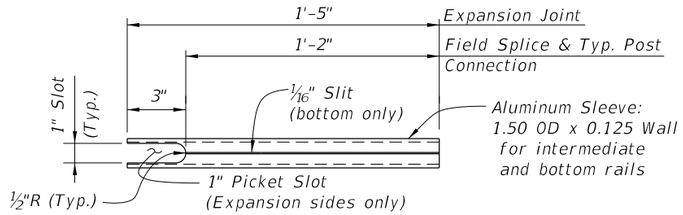

INTERMEDIATE OR BOTTOM RAIL - ALUMINUM SLEEVE DETAIL (Bottom Side Shown)

DETAIL "B" EXPANSION JOINT (FIELD SPLICE SIMILAR)

ALTERNATE REINFORCING (WWR) DETAILS

NOTE: Place wire panels to minimize the end overhang. End Overhangs greater than 4¾" are not permitted.

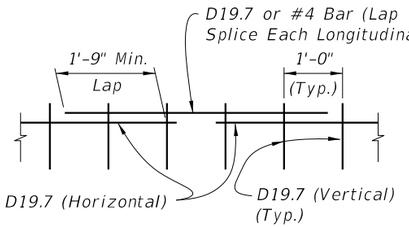

SPLICE DETAIL (Between WWR Sections)

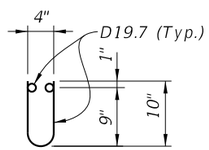

WWR SECTION DETAIL

CONVENTIONAL REINFORCING STEEL BENDING DIAGRAMS

BILL OF REINFORCING STEEL

MARK	SIZE	LENGTH
P	4	2'-0"
S	4	As Reqd.

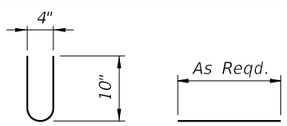

BAR 4P BAR 4S

CURB REINFORCING STEEL NOTES:

1. All bar dimensions in the bending diagrams are out to out.
2. The reinforcement for the curb on a retaining wall shall be the same as detailed for an 8" deck.
3. All reinforcing steel at the open joints shall have a 2" minimum cover.
4. Bars 4S may be continuous or spliced at the construction joints. Bar splices for Bars 4S shall be a minimum of 1'-8".
5. Deformed WWR meeting the requirements of Specifications Section 931 may be used in lieu of all Bars 4P and 4S.

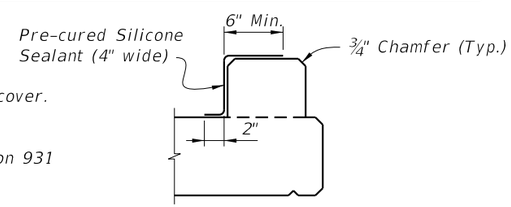

DETAIL "A" - SECTION AT INTERMEDIATE OPEN JOINT

ESTIMATED CONCRETE CURB QUANTITIES (SCHEME 2)		
ITEM	UNIT	QUANTITY
Concrete	CY/LF	0.0124
Reinforcing Steel	LB/LF	4.01

INTERMEDIATE JOINT SEAL NOTE:

At Intermediate Open Joints, seal the lower 6" portion of the open joint with Pre-cured Silicone Sealant. Apply sealant prior to any Class V finish coating and remove all curing compound and loose material from the surface prior to application of bonding agent.

SCHEME 2 - CONCRETE CURB DETAILS

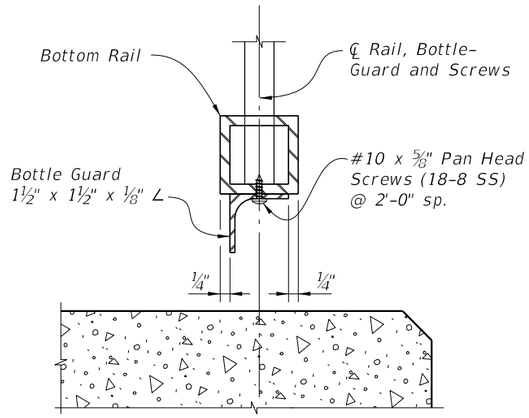

TYPICAL SECTION THROUGH BOTTOM RAIL (Post Not Shown for Clarity)

SCHEME 1 - BOTTLE GUARD DETAIL

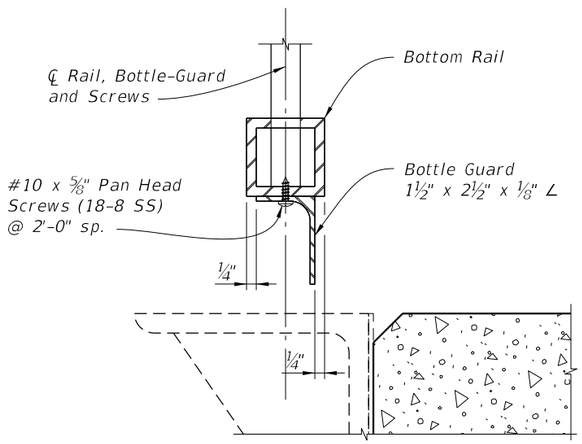

TYPICAL SECTION THROUGH BOTTOM RAIL (Post Not Shown for Clarity)

SCHEME 3 - BOTTLE GUARD DETAIL

9:17:30 AM

9/23/2021

LAST REVISION	REVISION	DESCRIPTION:	FDOT FY 2022-23 STANDARD PLANS	BRIDGE PEDESTRIAN/BICYCLE RAILING (ALUMINUM)	INDEX	SHEET
11/01/16					515-061	3 of 3

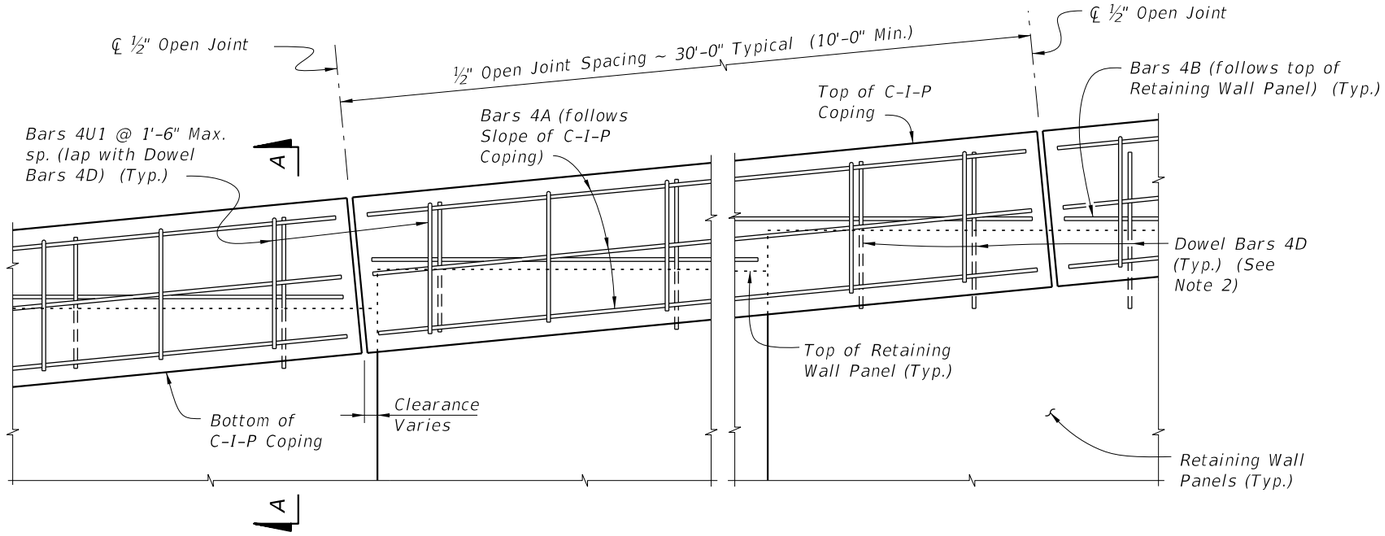

C-I-P COPING - PARTIAL ELEVATION VIEW

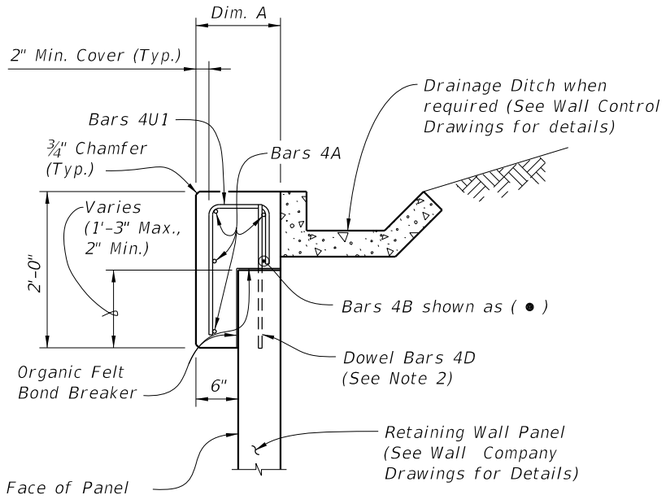

SECTION A-A
C-I-P COPING

PRECAST AND C-I-P COPING NOTES:

1. *Provide Class II concrete for slightly aggressive environments or Class IV for moderately or extremely aggressive environments.*
2. *Dowel Bars 4D extend 11" above the top of retaining wall panel. Field cut as necessary to maintain 2" minimum cover. See Wall Company Drawings for number and spacing of Dowel Bars 4D.*
3. *Payment for Dowel Bars 4D, Buildup Concrete and Coping will be made under Retaining Wall System (Permanent).*

Dim. A	Panel width + 6"
Dim. B	Panel width + 1'-0" Min.

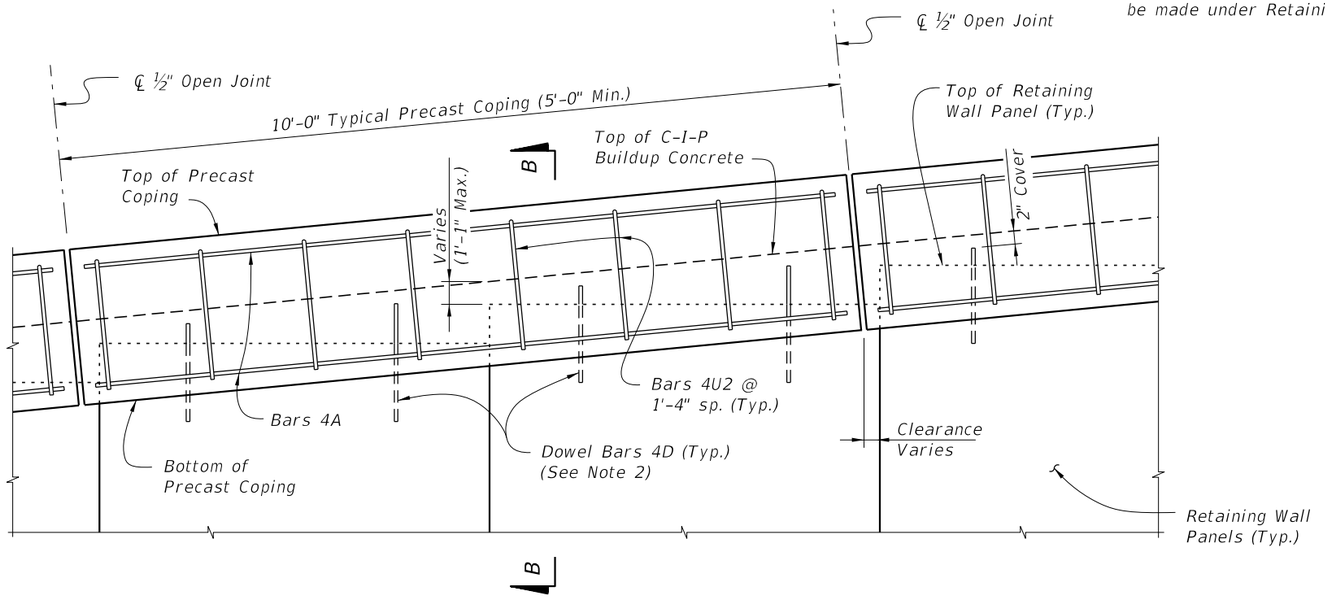

PRECAST COPING - PARTIAL ELEVATION VIEW

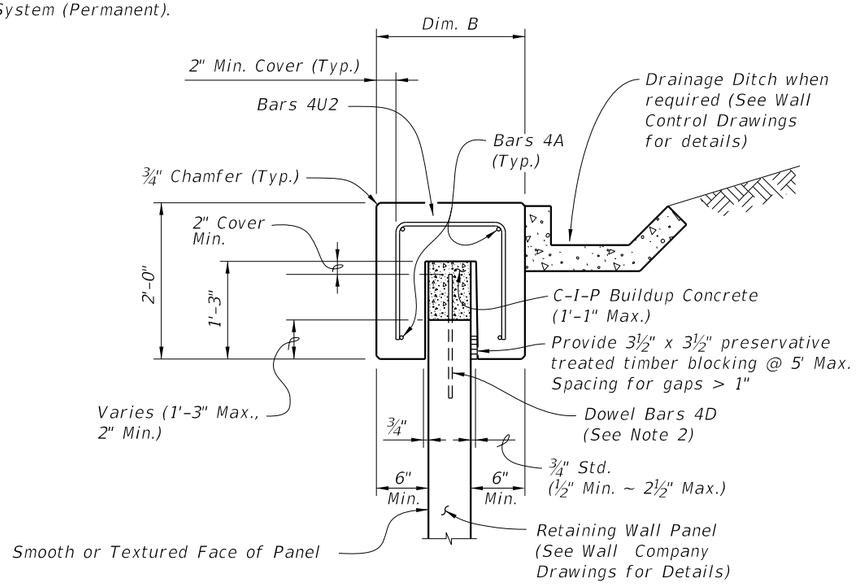

SECTION B-B
PRECAST COPING

9/22/2021 8:25:27 AM

LAST REVISION	REVISION	DESCRIPTION:	FDOT	FY 2022-23 STANDARD PLANS	MSE WALL COPING (PRECAST OR C-I-P)	INDEX	SHEET
11/01/19						521-600	1 of 2

REINFORCING STEEL BENDING DIAGRAMS - PRECAST AND C-I-P COPINGS

BILL OF REINFORCING STEEL

MARK	SIZE	LENGTH (L) ## S or M	LENGTH (L) ## E
A	4	AS REQD.	AS REQD.
B	4	AS REQD.	AS REQD.
D	4	2'-0"	2'-0"
U1	4	Panel width + 4"	Panel width + 4"
U2	4	Dim. B – 4"	Dim. B – 4"
U3	4	Dim. C – 4"	Dim. C – 6"

REINFORCING STEEL NOTES:

1. All bar dimensions in the bending diagrams are out to out.
2. All reinforcing steel at the open joints will have a 2" minimum cover.
3. Bars 4A may be continuous or spliced at the construction joints. Lap splices for Bars 4A will be a minimum of 1'-8".
4. The Contractor may use Welded Wire Reinforcement (WWR) when approved by the Engineer. WWR must consist of Deformed wire meeting the requirements of Specification Section 931.

S = Slightly Aggressive
M = Moderately Aggressive
E = Extremely Aggressive

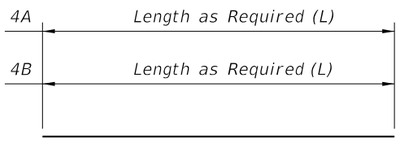

BARS 4A & 4B

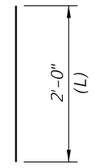

DOWEL BAR 4D

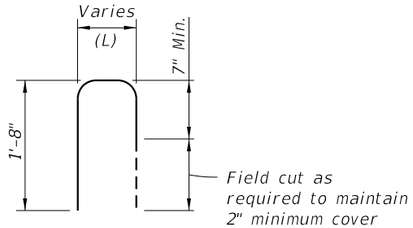

BAR 4U1

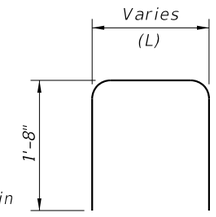

BAR 4U2

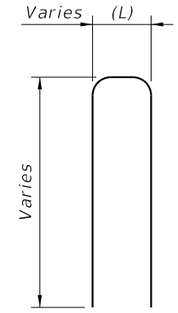

BAR 4U3

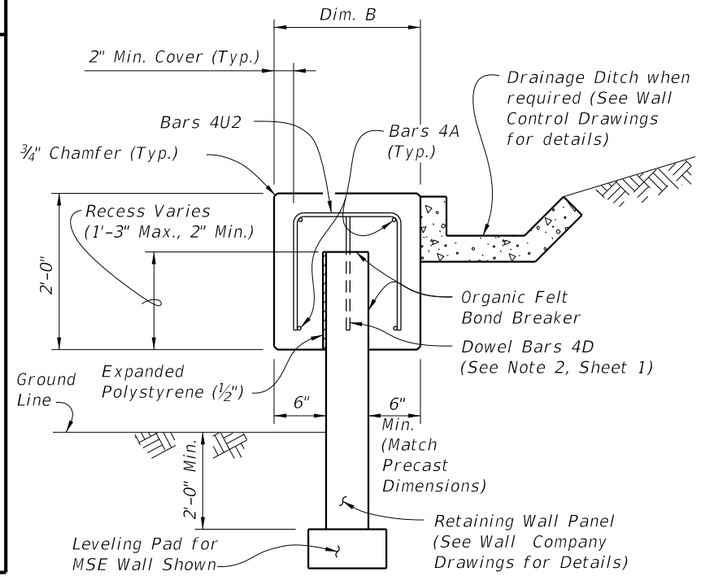

C-I-P COPING USED WITH PRECAST COPING

Note: When precast coping units do not fit the entire length of the retaining wall, use this similar C-I-P coping for short portions between precast coping units. This C-I-P coping may also be used for vertical copings.

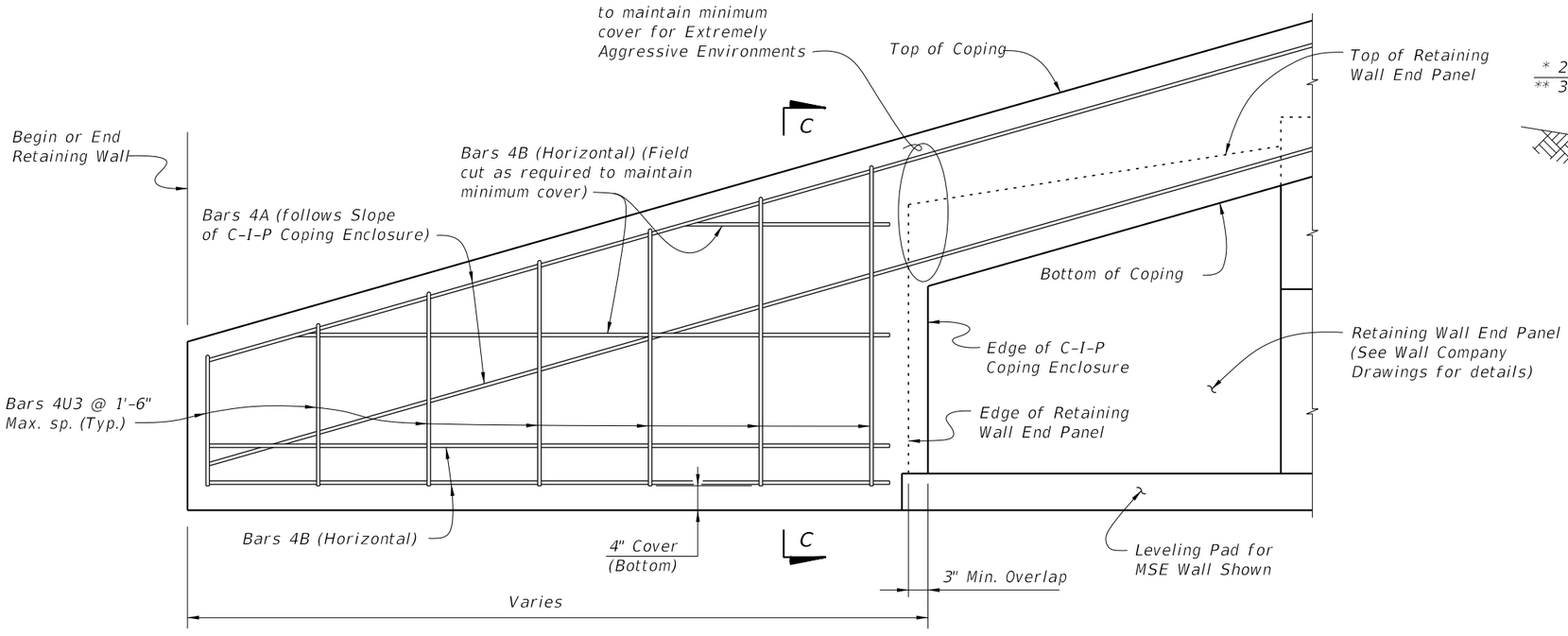

C-I-P COPING ENCLOSURE DETAIL

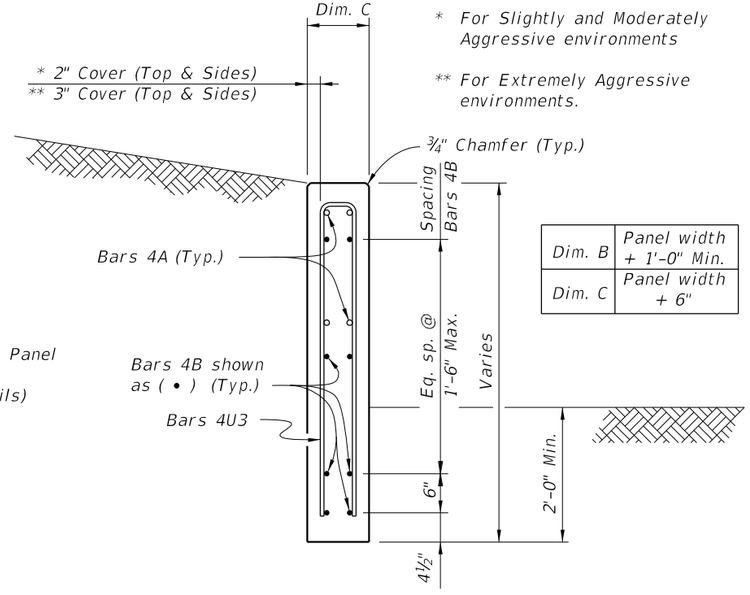

* For Slightly and Moderately Aggressive environments

** For Extremely Aggressive environments.

Dim. B	Panel width + 1'-0" Min.
Dim. C	Panel width + 6"

SECTION C-C

9/22/2021 8:25:30 AM

LAST REVISION	REVISION	DESCRIPTION:			INDEX	SHEET
11/01/19			FDOT FY 2022-23 STANDARD PLANS	MSE WALL COPING (PRECAST OR C-I-P)	521-600	2 of 2

NOTES

DESIGN CRITERIA:

1. Design is based on the assumption that the material contained within the reinforced soil volume, methods of construction and quality of prefabricated materials are in accordance with Specification Section 548 and Chapter 3 of the FDOT Structures Design Guidelines.

SOIL PARAMETERS:

1. See Wall Control Drawings for soil characteristics of foundation material to be used in the design of the wall system.
2. The Contractor will provide soil design parameters for backfill material based on the actual soil characteristics utilized at the site.

MATERIALS:

1. See Specification Section 548 for material requirements.

CONSTRUCTION:

1. Walls will be constructed in accordance with Specification Section 548 and the Wall Company's instructions.
2. For location and alignment of retaining walls, see Wall Control Drawings.
3. If required, locate manholes and drop inlets as shown on wall elevations.
4. Refer to Wall Control Drawings of individual walls for minimum reinforcement strip/mesh length, factored bearing resistance's, minimum wall embedment and anticipated long term and differential settlements.
5. The Contractor is responsible for controlling water during storm events as needed during construction.
6. It is the Contractor's responsibility to determine the location of any guardrail posts behind retaining wall panels. Prior to placement of the top layer of soil reinforcement, individual reinforcing strips/mesh may be skewed (15° maximum) to avoid the post locations if authorized by the Engineer. No cutting of soil reinforcement is allowed unless shown on Shop Drawings and approved by the Engineer. Any damage done to the soil reinforcement due to installation of the guardrail will be repaired by the Contractor at the Contractor's expense. Repair method will be approved by the Engineer.
7. If existing or future structures, pipes, foundations or guardrail posts within the reinforced soil volume interfere with the normal placement of soil reinforcement and specific directions have not been provided on the plans, the Contractor will notify the Engineer to determine what course of action shall be taken.
8. The Contractor is responsible for gradually displacing upper layer(s) of soil reinforcement downward (15° maximum from horizontal) to avoid cutting soil reinforcement and conflicts with paving and subgrade preparation. The Contractor's attention is directed especially to situations where roadway superelevation and/or soil mixing are anticipated.
9. For concrete facing panel surface treatment, see Wall Control Drawings. Extend surface treatment a minimum of 6" below final ground line.
10. Drive piles located within the soil volume prior to construction of the retaining wall, unless a method to protect the structure, acceptable to both the Engineer and Wall Company, is proposed and approved in writing. The portion of piles or drilled shafts extensions within the soil volume will be wrapped with polyethylene sheeting in accordance with Specification Section 459.
11. A structural extension of the connection of the retaining wall panel to soil reinforcement will be used whenever necessary to avoid cutting or excessive skewing (greater than 15°) of the soil reinforcement around obstructions (i.e., piles, pipes, manholes, drop inlets, etc.).
12. Steps in leveling pads will occur at MSE Wall panel interfaces. Panels will not cantilever more than 2" past the end of the upper tier leveling pad.
13. The top of the leveling pad or footing will be 2'-0" minimum below final ground line.
14. Top of leveling pad elevations shown in the Wall Control Drawings are maximum elevations. The constructed leveling pad elevations may be deeper based on the panel layout shown in the shop drawings.
15. The height of panels in the bottom course of MSE Walls must not be less than half the height of a standard panel.
16. Work this Index with Index 521-600 thru 521-650.

SHOP DRAWINGS:

See Specification Section 548 for shop drawing requirements.

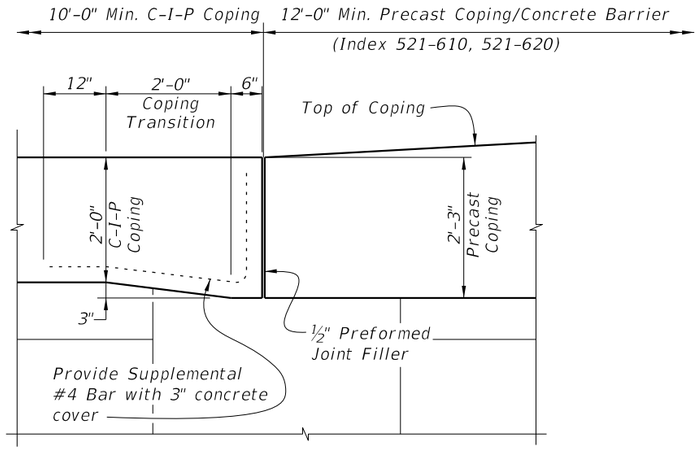

ELEVATION VIEW OF
COPING HEIGHT TRANSITION

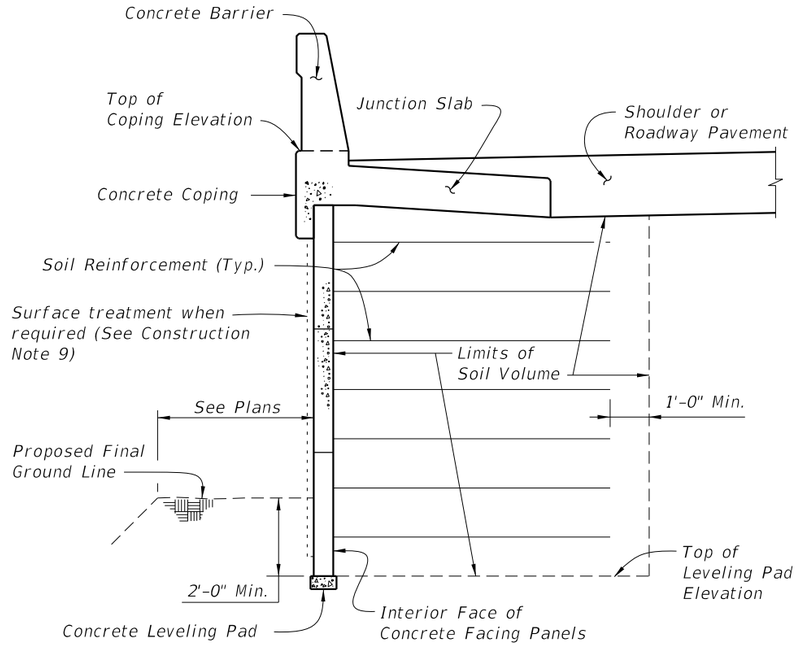

TYPICAL MSE RETAINING WALL SECTION
WITH A CONCRETE BARRIER
(Showing Limits of the Reinforced Soil Volume)

FDOT MSE RETAINING WALL CLASSIFICATION TABLE

Applicable FDOT Wall Type *	Durability Requirements (Carbon-Steel Reinforcing)			Durability Requirements (FRP Reinforcing)			Soil Reinforcement Type	Other Allowable FDOT Wall Types					
	Concrete Cover (in.)	Concrete Class for Panels	Pozzolan Additions? **	Concrete Cover (in.)	Concrete Class for Panels	Pozzolan Additions? **		2A	2B	2C	2D	2E	2F
Type 2A	2	II	No	1.5	II	No	Metal		✔	✔	✔	✔	✔
Type 2B	2	IV	No	1.5	IV	No	Metal			✔	✔	✔	✔
Type 2C	3	IV	No	1.5	IV	No	Metal				✔	✔	✔
Type 2D	3	IV	Yes	2	IV	No	Metal						✔
Type 2E	3	IV	No	2	IV	No	Plastic						✔
Type 2F	3	IV	Yes	2	IV	No	Plastic						

* See Data Table in Contract Plans.

** Highly Reactive Pozzolans.

9:51:08 AM

9/22/2021

GENERAL NOTES AND DETAILS

LAST REVISION	REVISION	DESCRIPTION:	FDOT	FY 2022-23 STANDARD PLANS	MSE RETAINING WALL SYSTEMS - PERMANENT	INDEX	SHEET
11/01/21						548-020	1 of 1

NOTES

DESIGN CRITERIA:

1. Design is based on the assumption that the material contained within the reinforced soil volume, methods of construction and quality of prefabricated materials are in accordance with Specification Section 548 and FDOT Structures Design Guidelines Section 3.13.2.
2. It is the responsibility of the Engineer to determine that the factored bearing pressure shown for the wall does not exceed the factored bearing resistance of the foundation for that specific wall location.
3. The Wall Company is responsible for internal stability of the wall. External stability design, including foundation and slope stability, is the responsibility of the Engineer.
4. If present, consider in design and analysis and locate manholes and drop inlets as shown on wall elevations.

SOIL PARAMETERS:

1. See wall control drawings for soil characteristics of foundation material to be used in the design of the wall system. The Contractor must provide soil design parameters for backfill material based on the actual soil characteristics utilized at the site. Provide the values of unit weight, cohesion and internal friction angle in the Shop Drawings.

MATERIALS:

1. Provide soil reinforcement in accordance with Specification Section 548.
2. For additional material notes, see Wall Company General Notes.

CONSTRUCTION:

1. Walls must be constructed in accordance with Specification Section 548 and the Wall Company's instructions.
2. For location and alignment of retaining walls, see Wall Control Drawings.
3. Refer to Plan and Elevation sheets of individual walls for minimum reinforcement strip/mesh length, factored bearing resistance's, minimum wall embedment and anticipated long term and differential settlements.
4. If existing or future structures, pipes, foundations or guardrail posts within the reinforced soil volume interfere with the normal placement of soil reinforcement and specific directions have not been provided on the plans, the Contractor must notify the Engineer to determine what course of action should be taken.
5. The Contractor is responsible for gradually deflecting upper layer(s) of soil reinforcement downward (15° maximum from horizontal) to avoid cutting soil reinforcement and conflicts with paving and subgrade preparation. The Contractor's attention is directed especially to situations where roadway superelevation and/or soil mixing are anticipated.

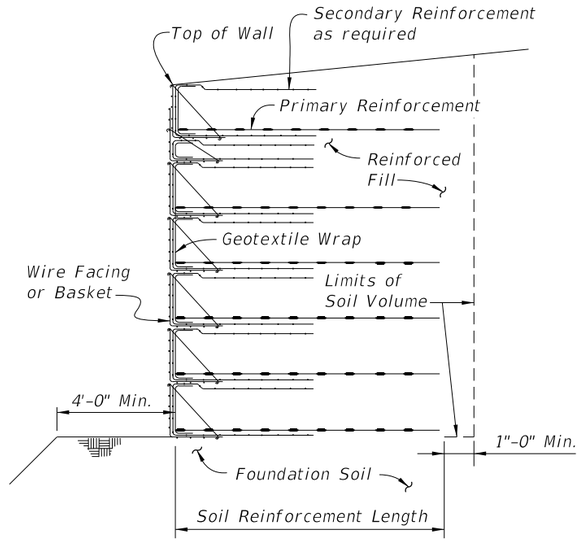

TYPICAL RETAINING WALL SECTION
(Showing Limits of the Reinforced Soil Volume)

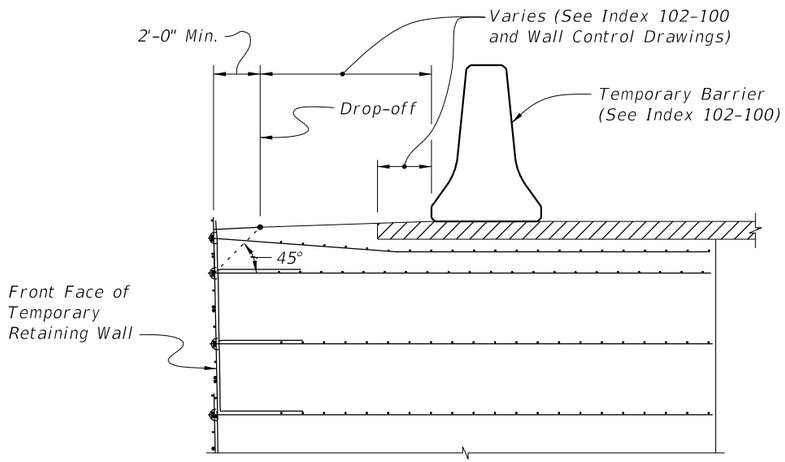

TEMPORARY TRAFFIC RAILING
PLACEMENT DETAIL

GENERAL NOTES AND DETAILS

9/22/2021 10:04:48 AM

LAST REVISION	REVISION	DESCRIPTION:	FDOT	FY 2022-23 STANDARD PLANS	MSE RETAINING WALL SYSTEMS - TEMPORARY	INDEX	SHEET
11/01/17						548-030	1 of 1

CONDUIT GENERAL NOTES:

1. Furnish and install approved Conduits, Fittings and Embedded Junction Boxes (EBJ's) in accordance with Specification Sections 630 and 635, this Standard, the National Electric Code (NEC) and as directed by the Engineer.

2. Furnish and install Embedded Junction Boxes (EJB) with weatherproof covers sized in accordance with NEC requirements and the maximum size limits shown. Install EJB adjacent to the Begin and End of Bridges, Begin and End of Retaining Walls, (except omit EJB adjacent to the Bridge unless a precast Traffic Railing with junction slab is used), and at other locations as necessary to maintain 300 foot maximum spacing. See Plans for additional locations and details.

3. For Conduit not designated for future use, see Plans for details. For Conduit designated for future use, stub out and cap the Conduit. Drive a 3'-0"± long ¾" (min.) diameter Steel Pipe flush with the ground line adjacent to the end of the Conduit as shown on Sheets 2, 3 or 4. Provide the location of the stub out with Steel Pipe to the Engineer for inclusion on the As-Built Plans.

4. Shift vertical Railing reinforcement symmetrically to provide 2" clearance to EJB. Space shifted vertical reinforcement at minimum 3" centers. Cut horizontal Railing reinforcement to provide 2" clearance to EJB and provide supplemental reinforcement as shown. To facilitate placement of Conduit, Expansion Fittings, and Expansion/Deflection Fittings, shift reinforcing a maximum of 1" but do not cut railing reinforcing to facilitate Conduit or Fittings. Do not bundle Conduits, or Conduit and horizontal reinforcement.

5. Place conduits as indicated in this Standard unless Structures Plans indicate fewer.

* Reduce to 6" maximum when installed in Pedestrian/ Bicycle Railings.

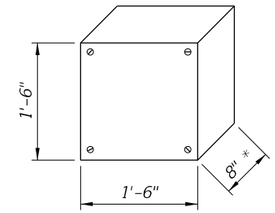

EJB "A"
Double or Triple Conduit
(Maximum Dimensions)

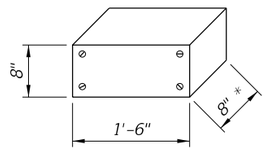

EJB "B"
Single Conduit
(Maximum Dimensions)

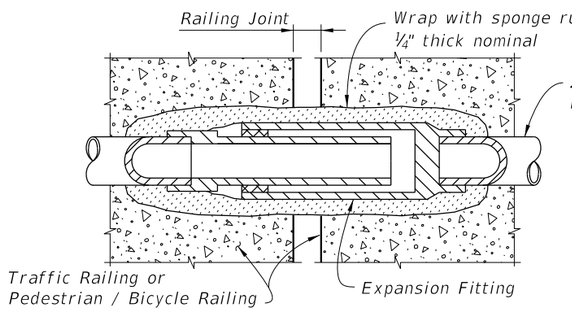

DETAIL "A"
EXPANSION FITTING DETAIL

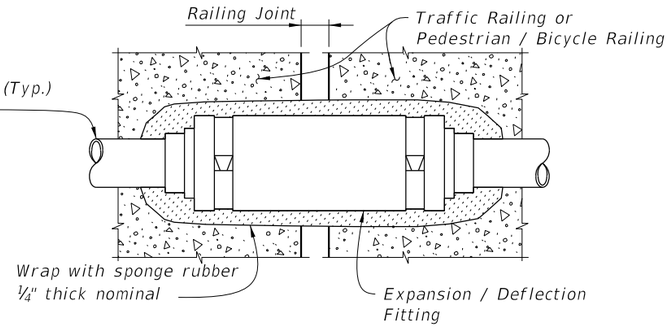

DETAIL "B" EXPANSION / DEFLECTION
FITTING DETAIL (CONCRETE / CONCRETE)

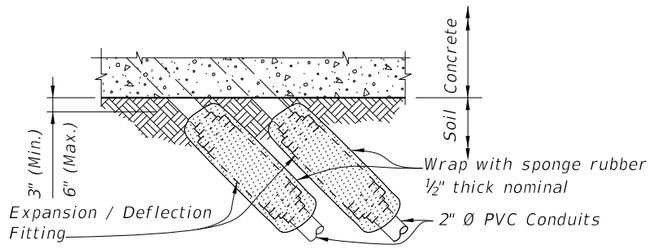

DETAIL "C" EXPANSION / DEFLECTION
FITTING DETAIL (CONCRETE / SOIL)

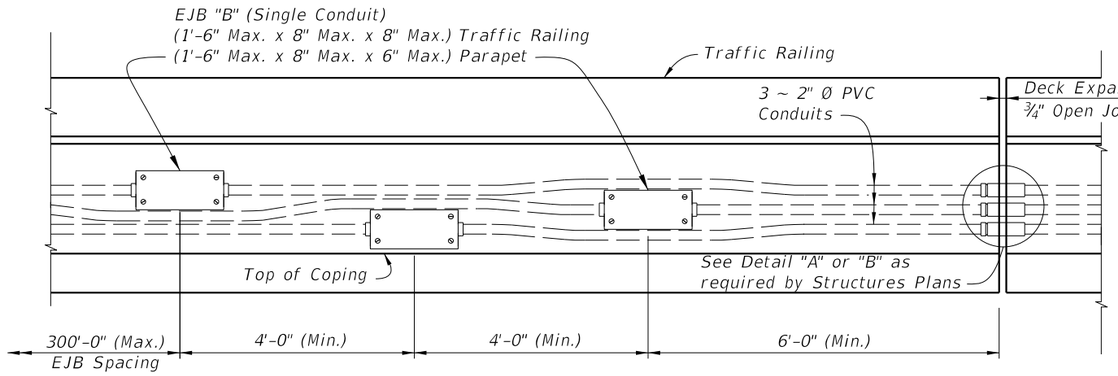

EJB "B" DETAIL

* 36" Single-Slope Traffic Railing shown, other Traffic Railings and Pedestrian/Bicycle Railings similar.
** EJB "A" shown, EJB "B" similar. See EJB "B" Detail.
*** See Sheet 1, Note 5.

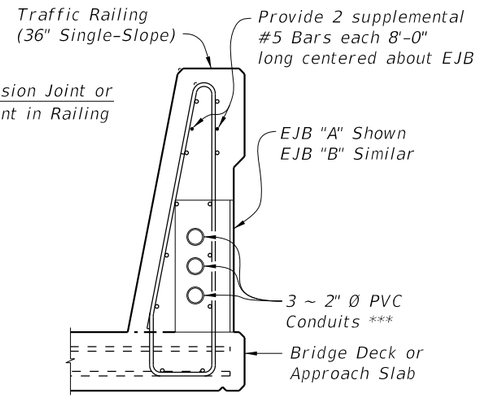

SECTION THRU
TRAFFIC RAILING AT EJB
(36" SINGLE-SLOPE SHOWN,
42" SINGLE-SLOPE SIMILAR)

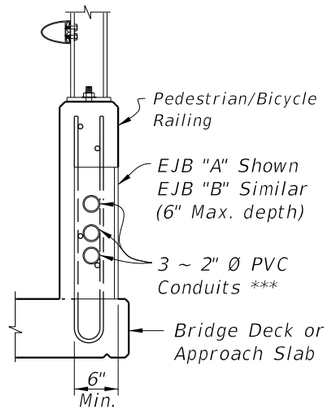

SECTION THRU PEDESTRIAN /
BICYCLE RAILING AT EJB

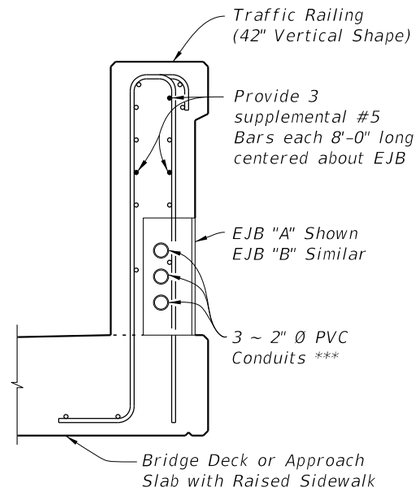

SECTION THRU
TRAFFIC RAILING AT EJB
(42" VERTICAL SHAPE SHOWN,
32" VERTICAL SHAPE SIMILAR)

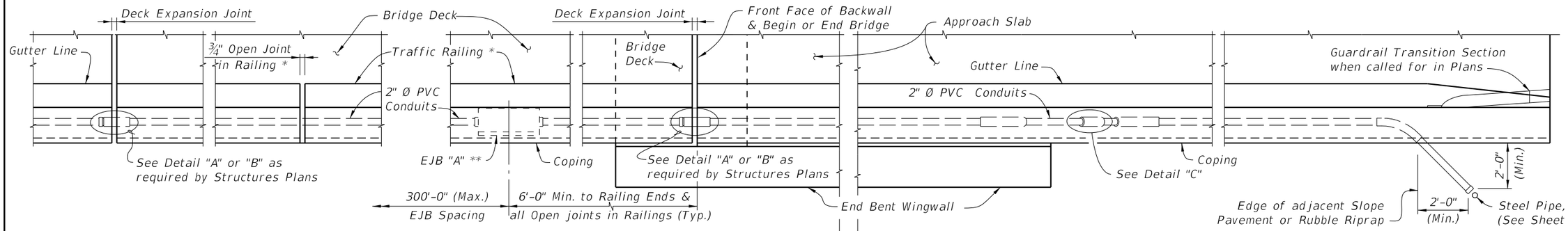

PARTIAL PLAN VIEW ALONG BRIDGE

PARTIAL PLAN VIEW ALONG APPROACH SLAB WITHOUT CONTINUING TRAFFIC RAILING

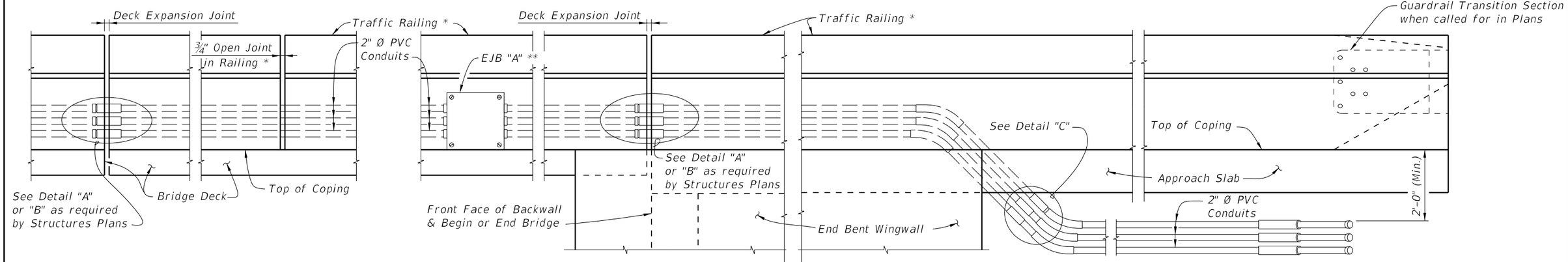

PARTIAL ELEVATION VIEW ALONG BRIDGE

PARTIAL ELEVATION VIEW ALONG APPROACH SLAB WITHOUT CONTINUING TRAFFIC RAILING

BRIDGE AND APPROACH SLAB WITH EDGE RAILING

9:43:42 AM
9/23/2021

LAST REVISION	REVISION	DESCRIPTION:	FDOT FY 2022-23 STANDARD PLANS	CONDUIT DETAILS - EMBEDDED	INDEX	SHEET
11/01/17					630-010	2 of 4

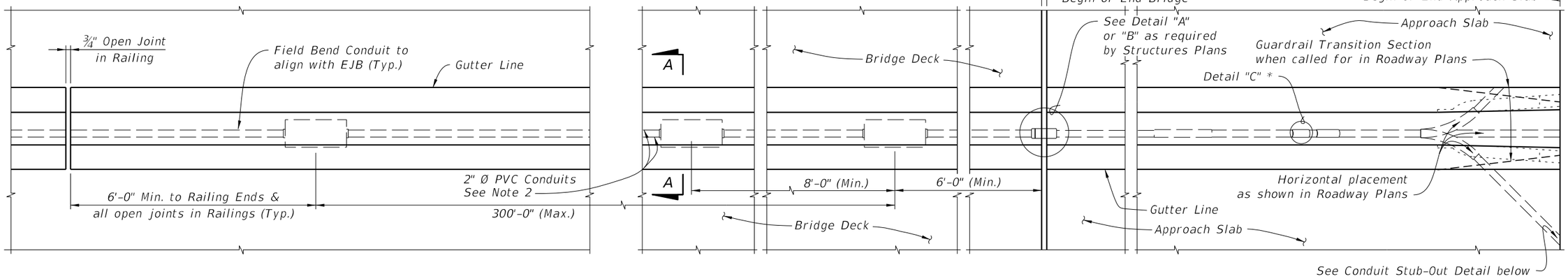

PARTIAL PLAN VIEW OF MEDIAN TRAFFIC RAILING ALONG BRIDGE

PARTIAL PLAN VIEW OF MEDIAN TRAFFIC RAILING ALONG APPROACH SLAB

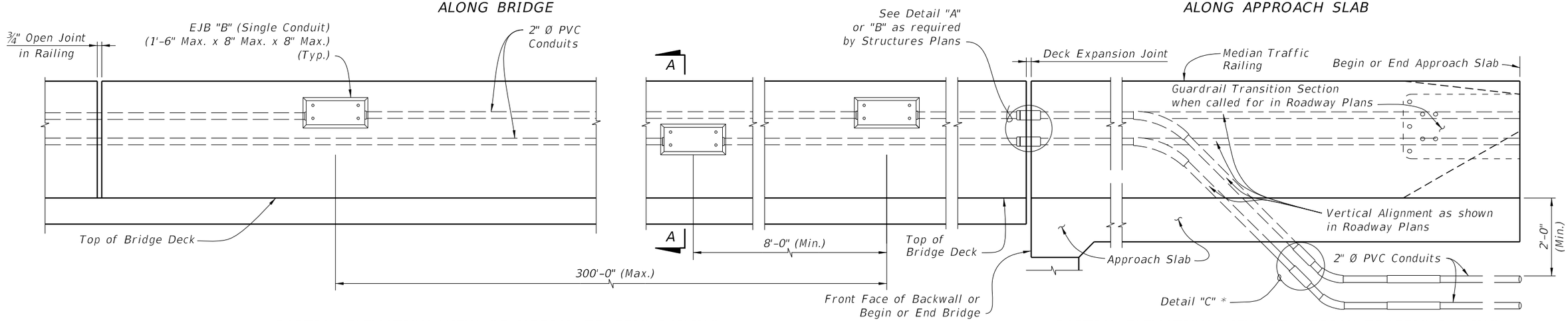

PARTIAL ELEVATION VIEW OF MEDIAN TRAFFIC RAILING ALONG BRIDGE

PARTIAL ELEVATION VIEW OF MEDIAN TRAFFIC RAILING ALONG APPROACH SLAB

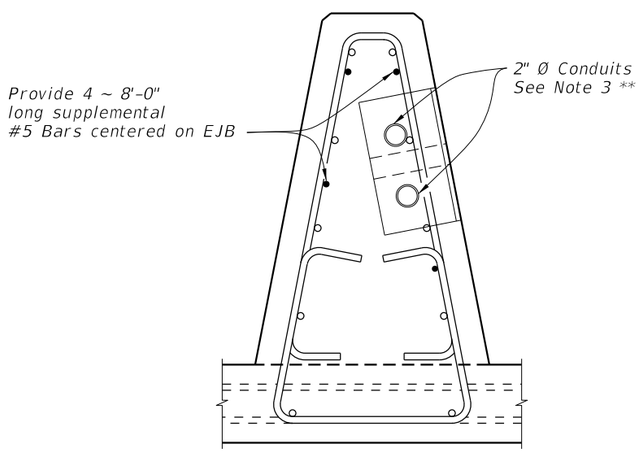

SECTION A-A
Median Traffic Railing (See Note 4)

* For non-continuing Traffic Railing only.
** See Sheet 1, Note 5

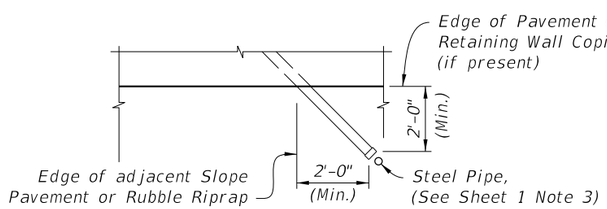

CONDUIT STUB-OUT DETAIL

NOTES:

1. Work this sheet with Index 521-426.
2. Adjust Conduit horizontally and vertically as necessary to align with EJB "B".
3. When installed in traffic face of a railing, use EJB "B" with a minimum ⅜" thick galvanized steel cover.
4. Position EJB such that, with gasket and cover plate secured and in place, cover plate is flush with the railing face. Flush is +⅛" to -¼" measured with a horizontal straightedge.

BRIDGE AND APPROACH SLAB WITH MEDIAN TRAFFIC RAILING

9/23/2021 9:43:43 AM

LAST REVISION	REVISION	DESCRIPTION:			INDEX	SHEET
11/01/17			FY 2022-23 STANDARD PLANS	CONDUIT DETAILS - EMBEDDED	630-010	3 of 4

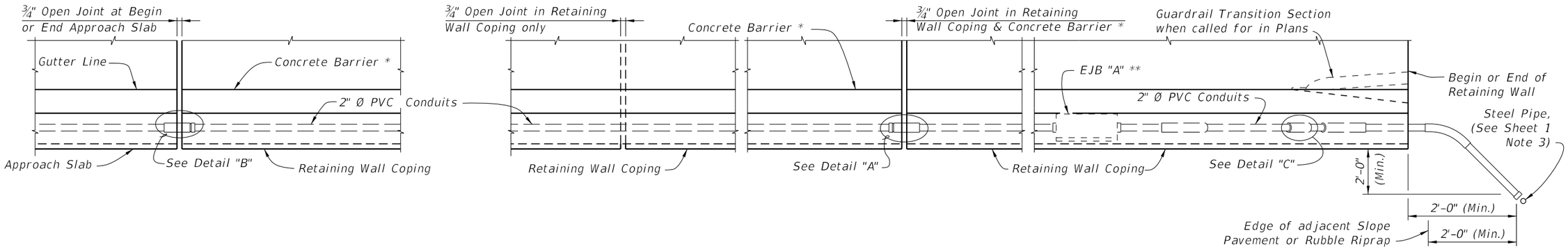

PARTIAL PLAN VIEW ALONG APPROACH SLAB WITH CONTINUING CONCRETE BARRIER

PARTIAL PLAN VIEW ALONG RETAINING WALL

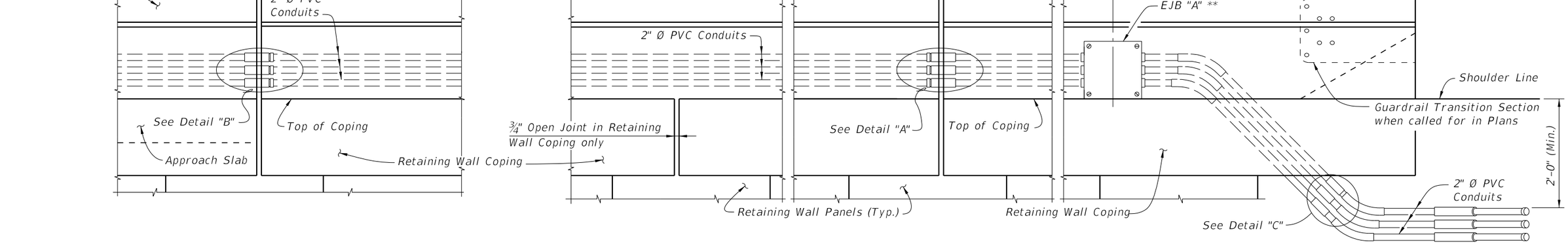

PARTIAL ELEVATION VIEW ALONG APPROACH SLAB WITH CONTINUING Concrete Barrier (Retaining Wall Mounted Concrete Barrier shown, Traffic Railing similar)

PARTIAL ELEVATION VIEW ALONG RETAINING WALL

* Index 521-610 Concrete Barrier/Junction Slab shown, other railings and parapets similar.
** EJB "A" shown EJB "B" similar. See EJB "B" Detail on Sheet 2.

APPROACH SLAB AND RETAINING WALL WITH CONCRETE BARRIER

9:43:44 AM
9/23/2021

LAST REVISION	REVISION	DESCRIPTION:	FDOT FY 2022-23 STANDARD PLANS	CONDUIT DETAILS - EMBEDDED	INDEX	SHEET
11/01/18					630-010	4 of 4

BX1-1

SECTION: 3
TOWNSHIP: 47 S
RANGE: 24 E
LATITUDE: 26° 24' 16"
LONGITUDE: 81° 52' 51"

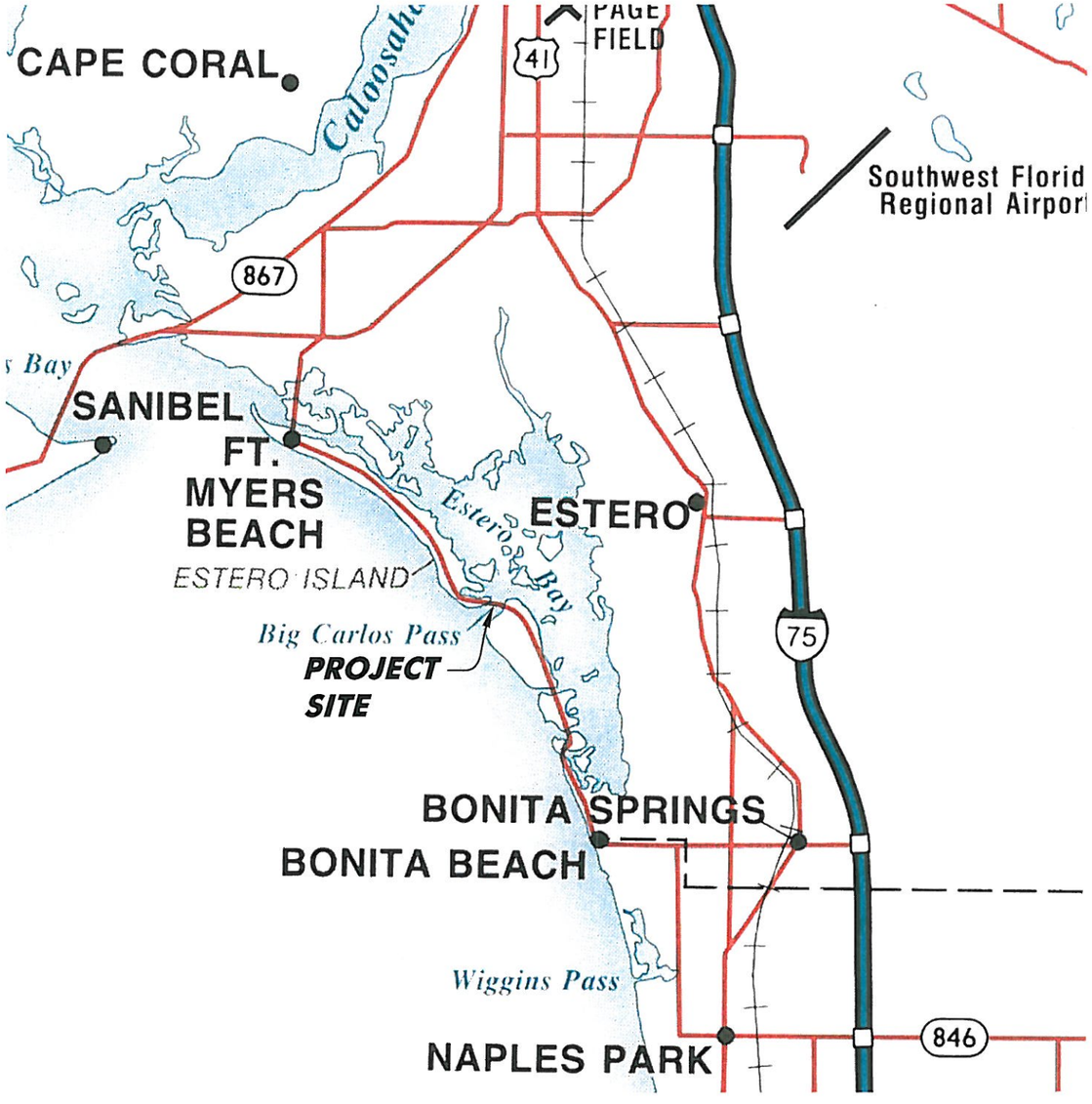

Vicinity Map

SCALE: 1" = 3 MILES

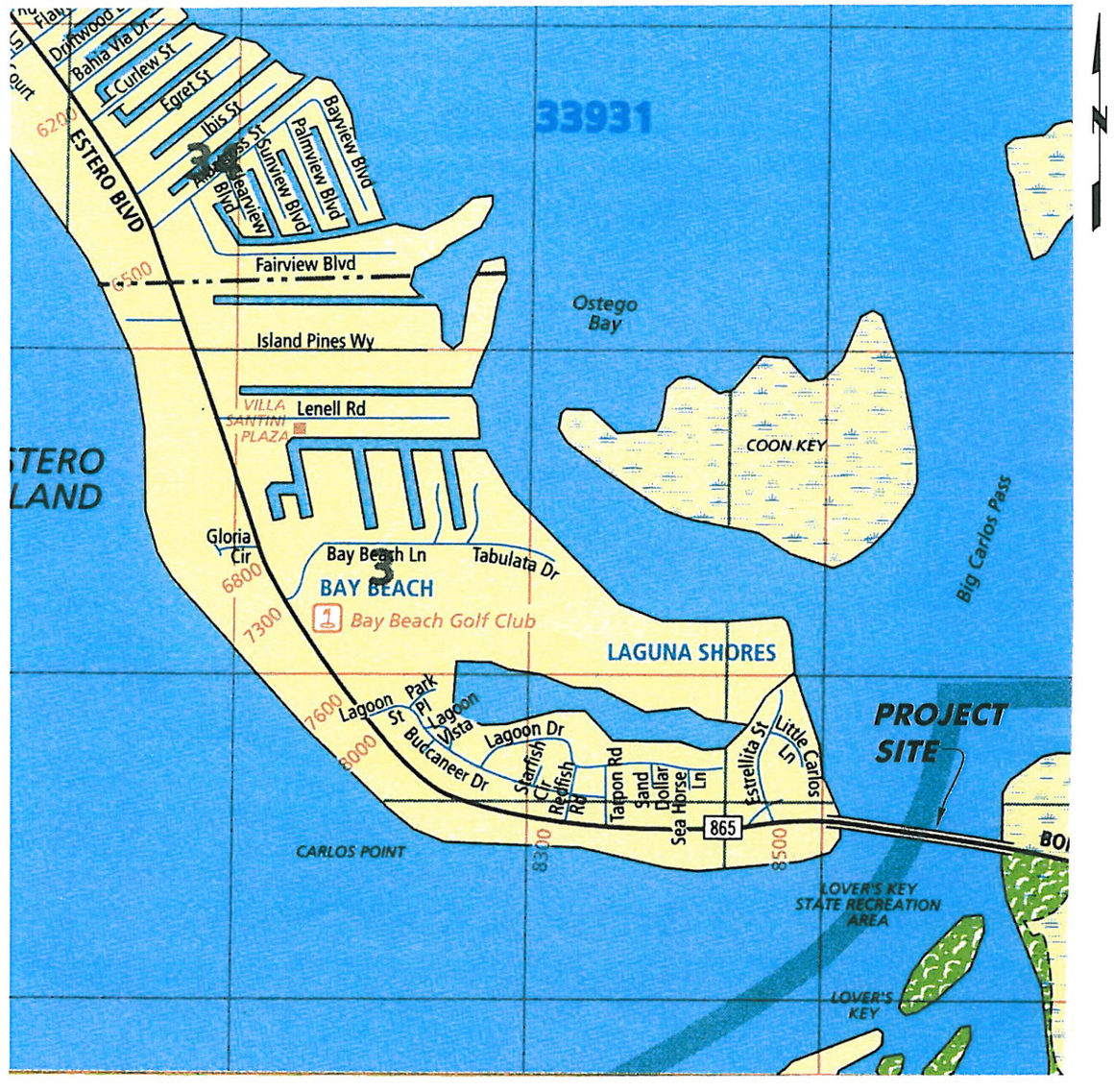

Location Map

SCALE: 1" = 1/4 MILES

Jeffrey C. Birmingham
REGISTERED PROFESSIONAL ENGINEER
FLORIDA REGISTRATION NO. 70789
DATE: March 12, 2012 11:03:46 a.m.
Drawing: LEE15CONSTRUCT.DWG

CONSTRUCTION PERMIT PLANS

HANS WILSON & ASSOC., INC.
1938 Hill Ave. Ft. Myers, Florida 33901
Tel: 239-334-6870 Fax: 239-334-7810
MARINE and ENVIRONMENTAL CONSULTANTS

Vicinity & Location Maps
SCALE: 1" = Varies

3-6-12
JCB

Lee County DOT
Big Carlos Pass Bridge

SHEET 1

BX1-1

SECTION: 3
TOWNSHIP: 47 S
RANGE: 24 E
LATITUDE: 26° 24' 16"
LONGITUDE: 81° 52' 51"

0 1000 2000
SCALE FEET

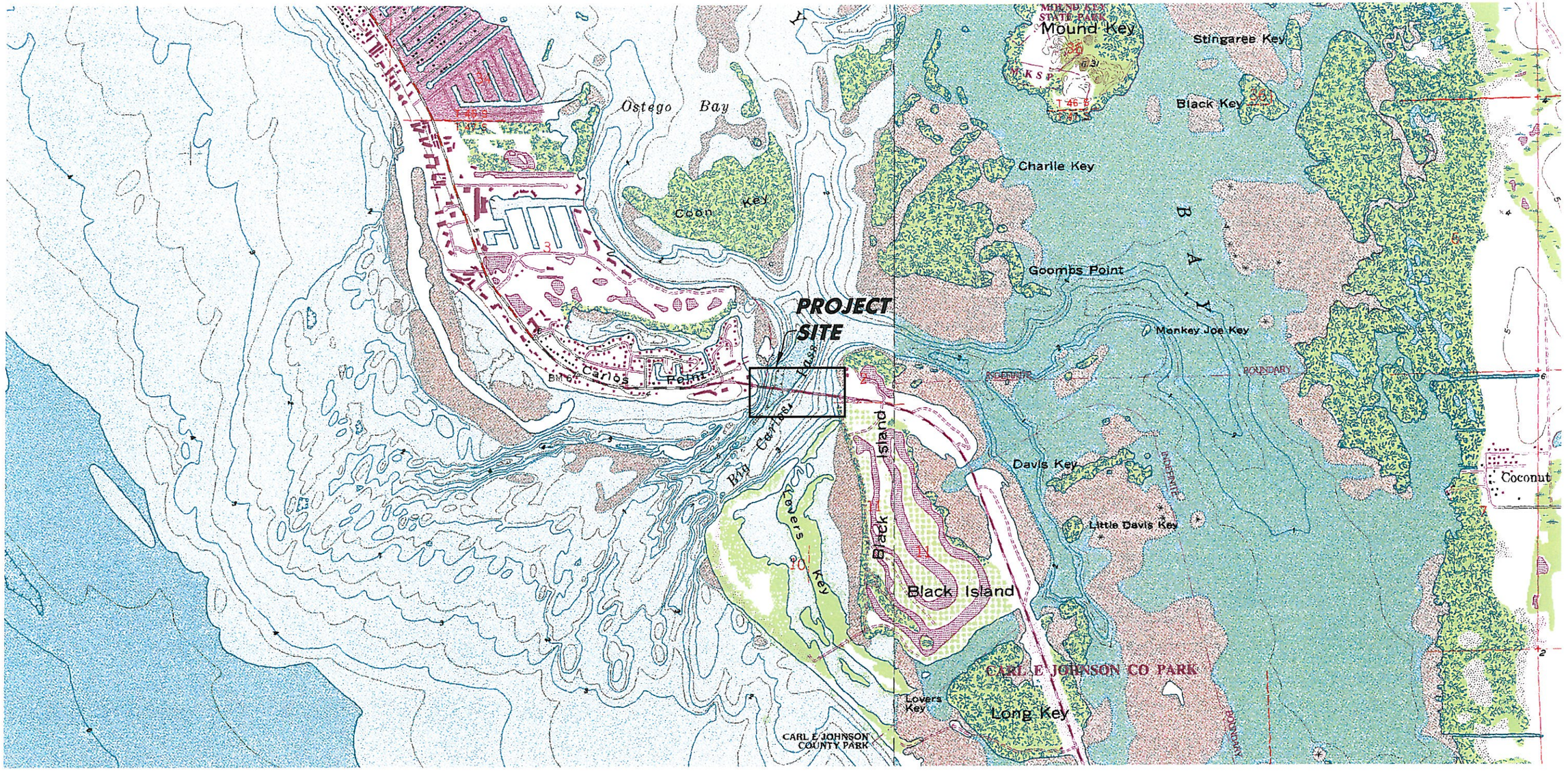

Jeffrey C. Birmingham
REGISTERED PROFESSIONAL ENGINEER
FLORIDA REGISTRATION NO. 70789
DATE: March 12, 2012 11:03:46 a.m.
Drawing: LEE15CONSTRUCT.DWG

CONSTRUCTION PERMIT PLANS

HANS WILSON & ASSOC., INC.
1938 Hill Ave. Ft. Myers, Florida 33901
Tel: 239-334-6870 Fax: 239-334-7810
MARINE and ENVIRONMENTAL CONSULTANTS

U.S.G.S. Quadrangle Map
7.5 Minute
SCALE: 1" = 2,000'

3-6-12
JCB

Lee County DOT
Big Carlos Pass Bridge

SHEET 2

BX1-2

SECTION: 3
TOWNSHIP: 47 S
RANGE: 24 E
LATITUDE: 26° 24' 16"
LONGITUDE: 81° 52' 51"

0 1000 2000
SCALE FEET

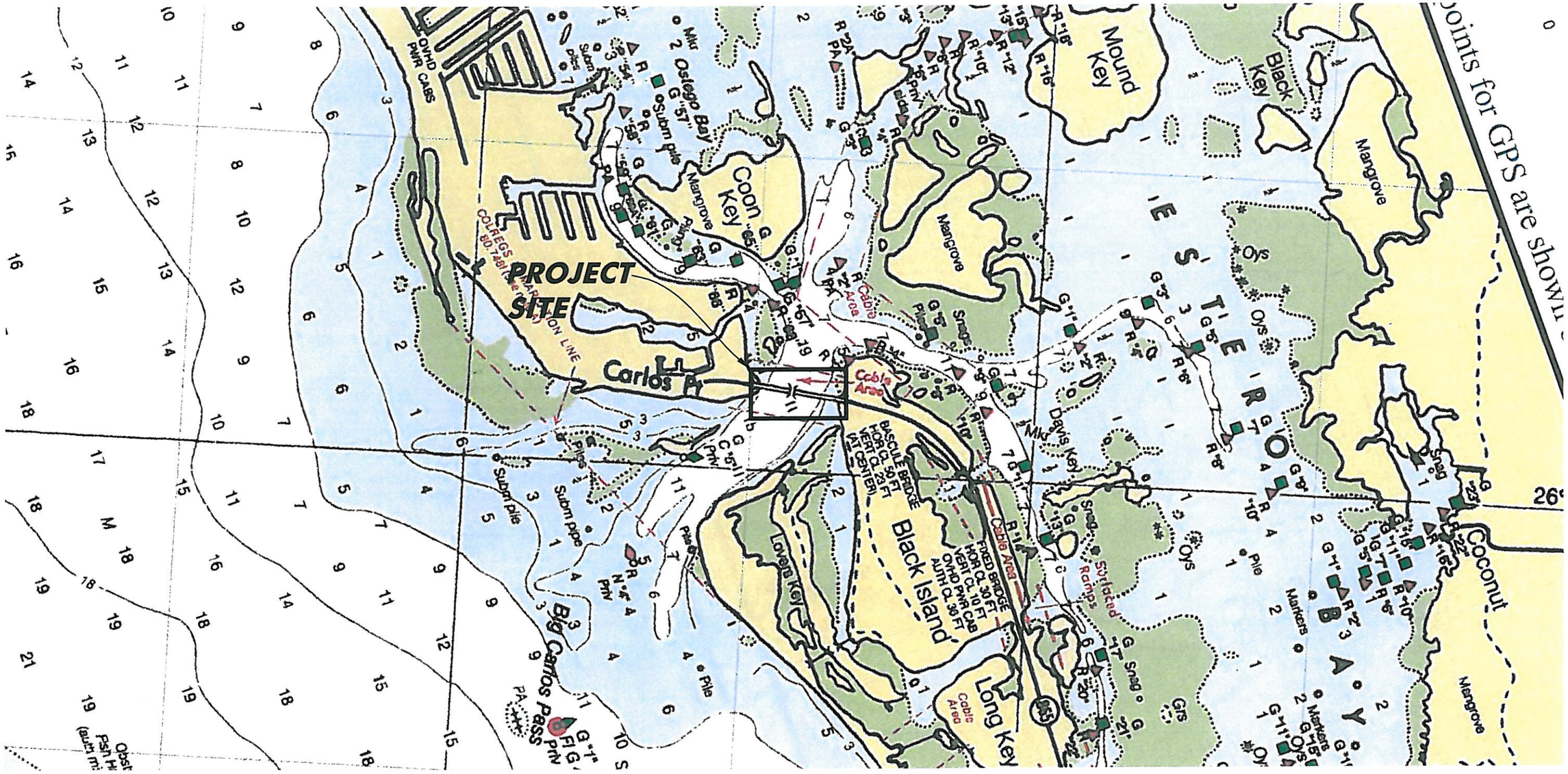

NOTE: This image has been reproduced from NOAA Chart No. 11427 corrected to October 2002 and NAD 1983 (WGS 1984)..

Jeffrey C. Birmingham
REGISTERED PROFESSIONAL ENGINEER
FLORIDA REGISTRATION NO. 70789
DATE: March 12, 2012 11:03:46 a.m.
Drawing: LEE15CONSTRUCT.DWG

CONSTRUCTION PERMIT PLANS

HANS WILSON & ASSOC., INC.
1938 Hill Ave. Ft. Myers, Florida 33901
Tel: 239-334-6870 Fax: 239-334-7810
MARINE and ENVIRONMENTAL CONSULTANTS

NOAA Chart No. 11427
SCALE: 1" = 2,000'

3-6-12
JCB

Lee County DOT
Big Carlos Pass Bridge

SHEET 3

BX1-3

SECTION: 3
TOWNSHIP: 47 S
RANGE: 24 E
LATITUDE: 26° 24' 16"
LONGITUDE: 81° 52' 51"

0 150 300
SCALE FEET

2010 Lee County Aerial

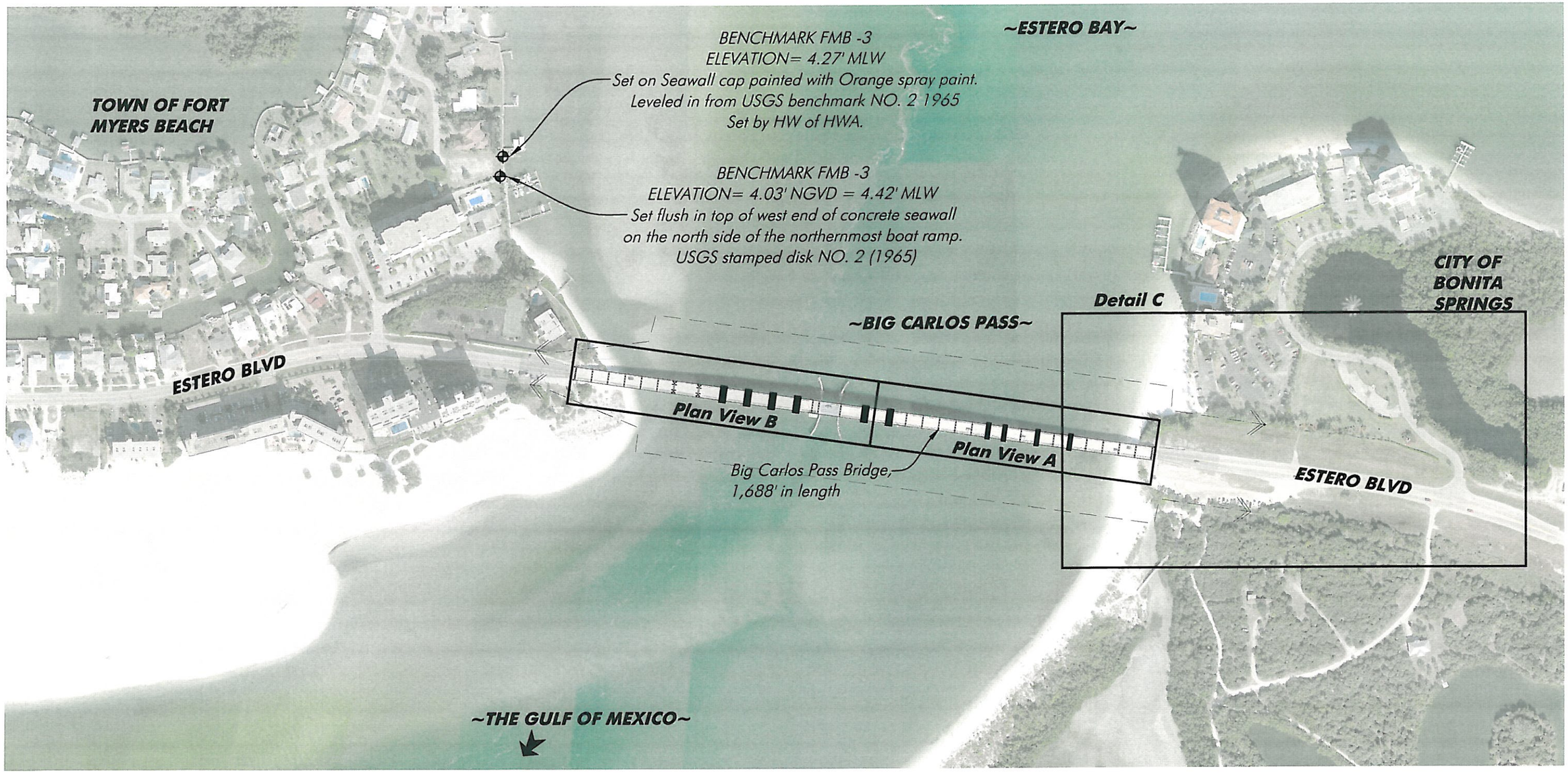

Jeffrey C. Birmingham
REGISTERED PROFESSIONAL ENGINEER
FLORIDA REGISTRATION NO. 70789
DATE: March 12, 2012 11:55:31 a.m.
Drawing: LEE15CONSTRUCT.DWG

CONSTRUCTION PERMIT PLANS

HANS WILSON & ASSOC., INC.
1938 Hill Ave. Ft. Myers, Florida 33901
Tel: 239-334-6870 Fax: 239-334-7810
MARINE and ENVIRONMENTAL CONSULTANTS

Overall Plan
Scale 1" = 300'

3-6-12
JCB

Lee County DOT
Big Carlos Pass Bridge

SHEET 4

BX1-4

BX1-5

SECTION: 3
TOWNSHIP: 47 S
RANGE: 24 E
LATITUDE: 26° 24' 16"
LONGITUDE: 81° 52' 51"

0 30 60
SCALE FEET

2010 Lee County Aerial

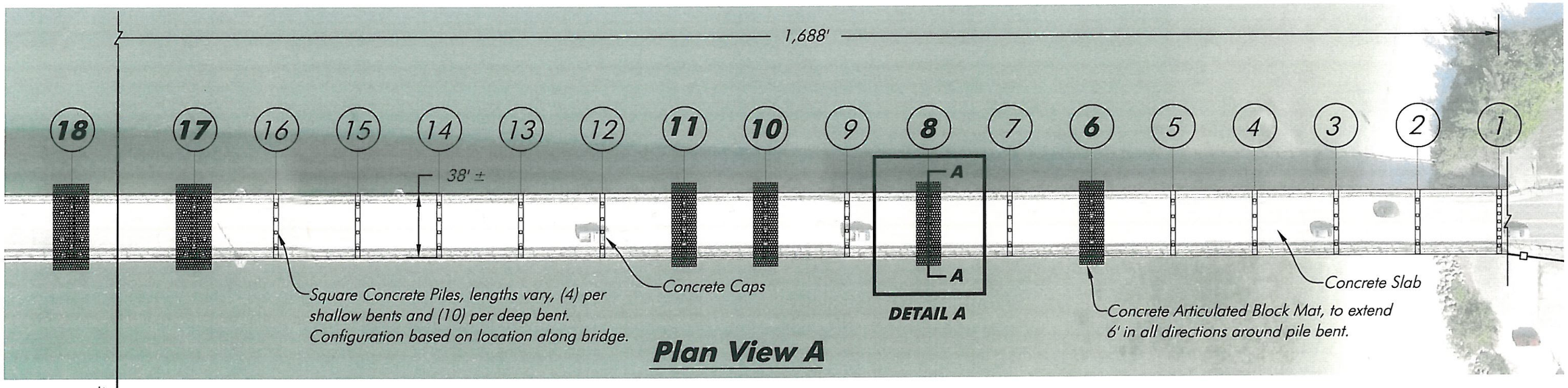

Plan View A

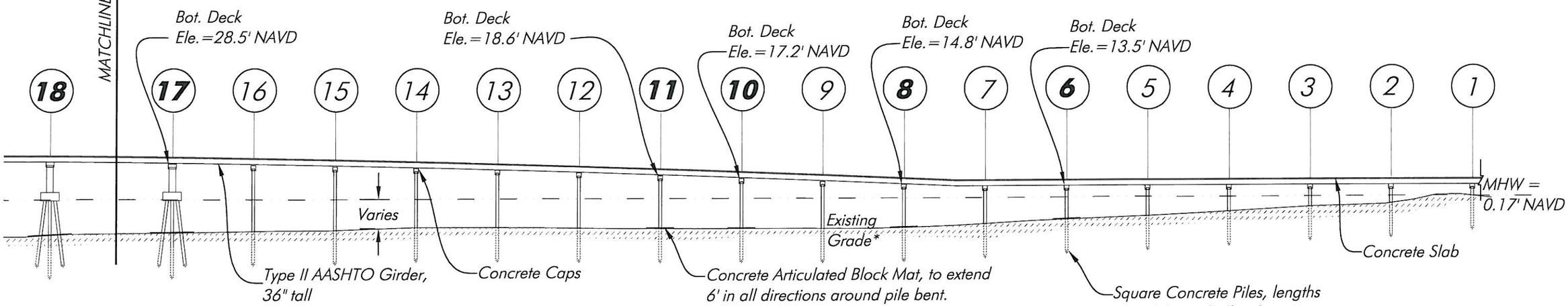

Section View A

*Existing Grade interpreted from drawings within the Scour Evaluation Report - Phase 3 for the Big Carlos Bridge prepared by Ayres Associates on 01/23/2007 & Drawings titled Big Carlos Bascule Bridge Repair by KCA Corp on 01/16/2006

NOTE: Tide Elevations per FDEP Tide Station 872-5331 Estero Island - Ostego Bay and reference NAVD.

Jeffrey C. Birmingham
REGISTERED PROFESSIONAL ENGINEER
FLORIDA REGISTRATION NO. 70789
DATE: March 12, 2012 11:55:31 a.m.
Drawing: LEE15CONSTRUCT.DWG

CONSTRUCTION PERMIT PLANS

HANS WILSON & ASSOC., INC.
1938 Hill Ave. Ft. Myers, Florida 33901
Tel: 239-334-6870 Fax: 239-334-7810
MARINE and ENVIRONMENTAL CONSULTANTS

Bridge Stations 1 - 18
Scale 1" = 60'

3-6-12
TFC

Lee County DOT
Big Carlos Pass Bridge

SHEET 5

BX1-5
BX1-5

BX1-6

SECTION: 3
TOWNSHIP: 47 S
RANGE: 24 E
LATITUDE: 26° 24' 16"
LONGITUDE: 81° 52' 51"

2010 Lee County Aerial

0 30 60
SCALE FEET

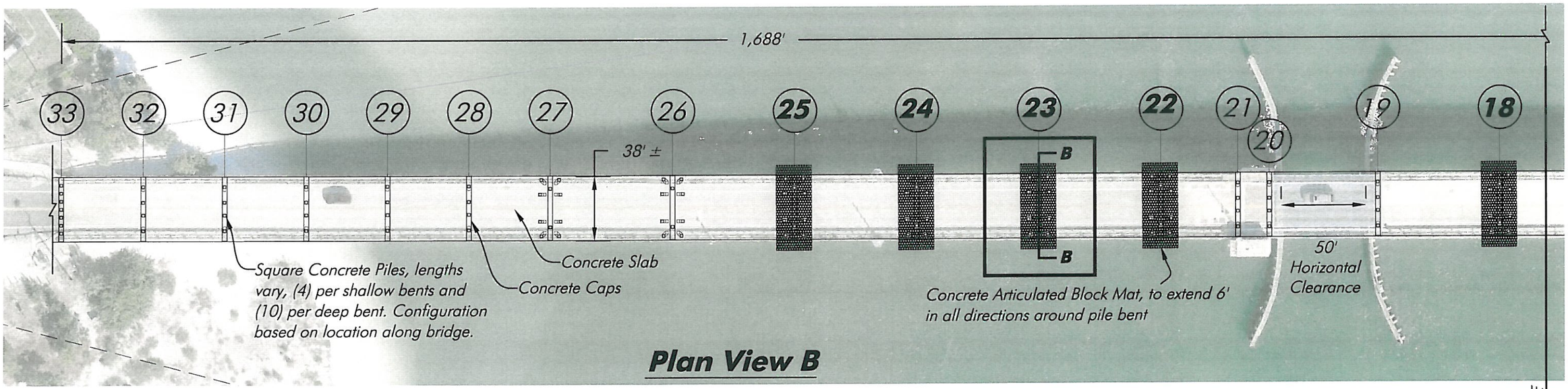

Plan View B

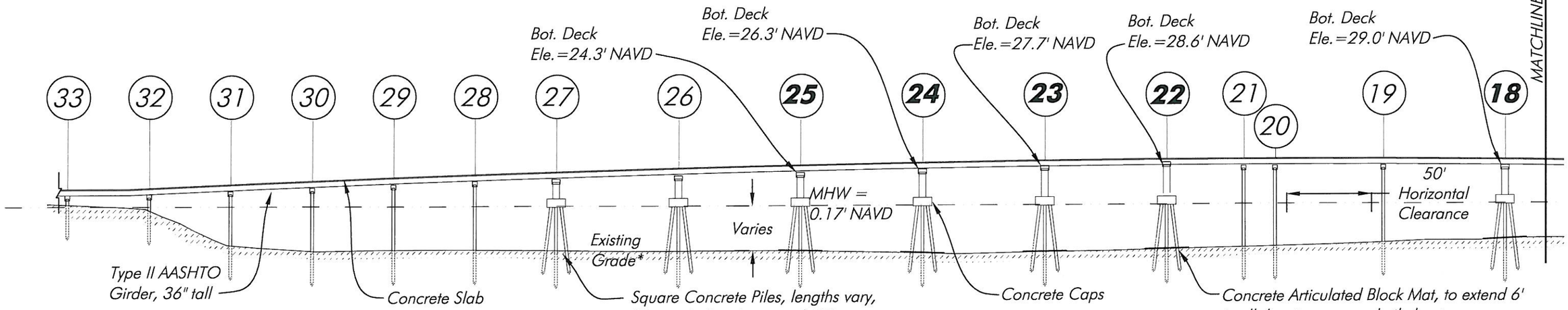

Section View B

*Existing Grade interpreted from drawings within the Scour Evaluation Report - Phase 3 for the Big Carlos Bridge prepared by Ayres Associates on 01/23/2007 & Drawings titled Big Carlos Bascule Bridge Repair by KCA Corp on 01/16/2006

NOTE: Tide Elevations per FDEP Tide Station 872-5331 Estero Island - Ostego Bay and reference NAVD.

Jeffrey C. Birmingham
REGISTERED PROFESSIONAL ENGINEER
FLORIDA REGISTRATION NO. 70789
DATE: March 12, 2012 11:55:31 a.m.
Drawing: LEE15CONSTRUCT.DWG

CONSTRUCTION PERMIT PLANS

HANS WILSON & ASSOC., INC.
1938 Hill Ave. Ft. Myers, Florida 33901
Tel: 239-334-6870 Fax: 239-334-7810
MARINE and ENVIRONMENTAL CONSULTANTS

Bridge Stations 18 - 33
Scale 1" = 60'

3-6-12
TFC

Lee County DOT
Big Carlos Pass Bridge

SHEET 6

BX1-6
BX1-6

SECTION: 3
TOWNSHIP: 47 S
RANGE: 24 E
LATITUDE: 26° 24' 16"
LONGITUDE: 81° 52' 51"

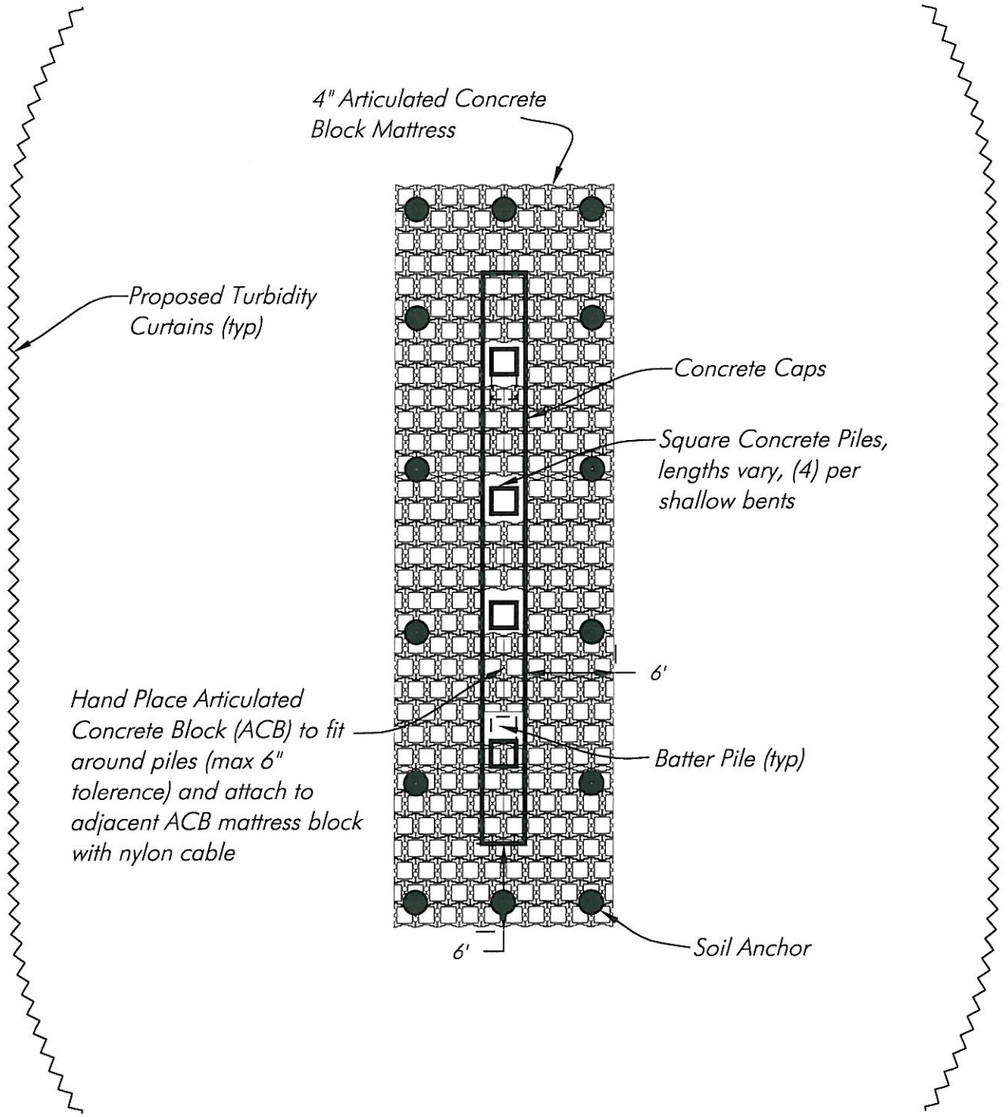

Detail A

Scale 1" = 10'

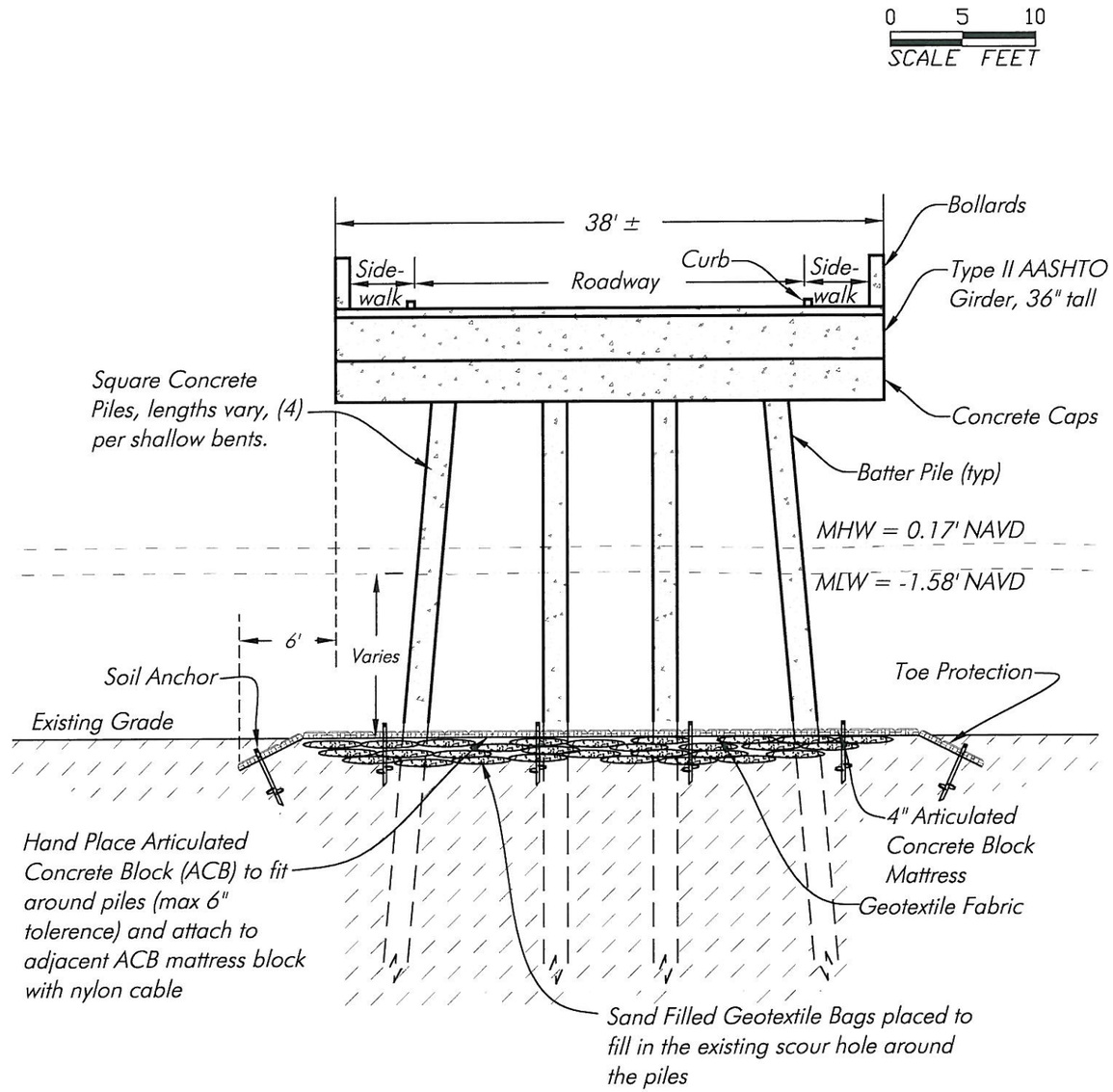

Section A-A

Scale 1" = 10'

NOTE: Tide Elevations per FDEP Tide Station 872-5331 Estero Island - Ostego Bay and reference NAVD.

CONSTRUCTION PERMIT PLANS

Jeffrey C. Birmingham
REGISTERED PROFESSIONAL ENGINEER
FLORIDA REGISTRATION NO. 70789
DATE: March 12, 2012 11:55:31 a.m.
Drawing: LEE15CONSTRUCT.DWG

HANS WILSON & ASSOC., INC.
1938 Hill Ave. Ft. Myers, Florida 33901
Tel: 239-334-6870 Fax: 239-334-7810
MARINE and ENVIRONMENTAL CONSULTANTS

Detail A and Section A-A
Scale 1" = 10'

3-6-12
TFC

Lee County DOT
Big Carlos Pass Bridge

SHEET 7

BX1-7

SECTION: 3
TOWNSHIP: 47 S
RANGE: 24 E
LATITUDE: 26° 24' 16"
LONGITUDE: 81° 52' 51"

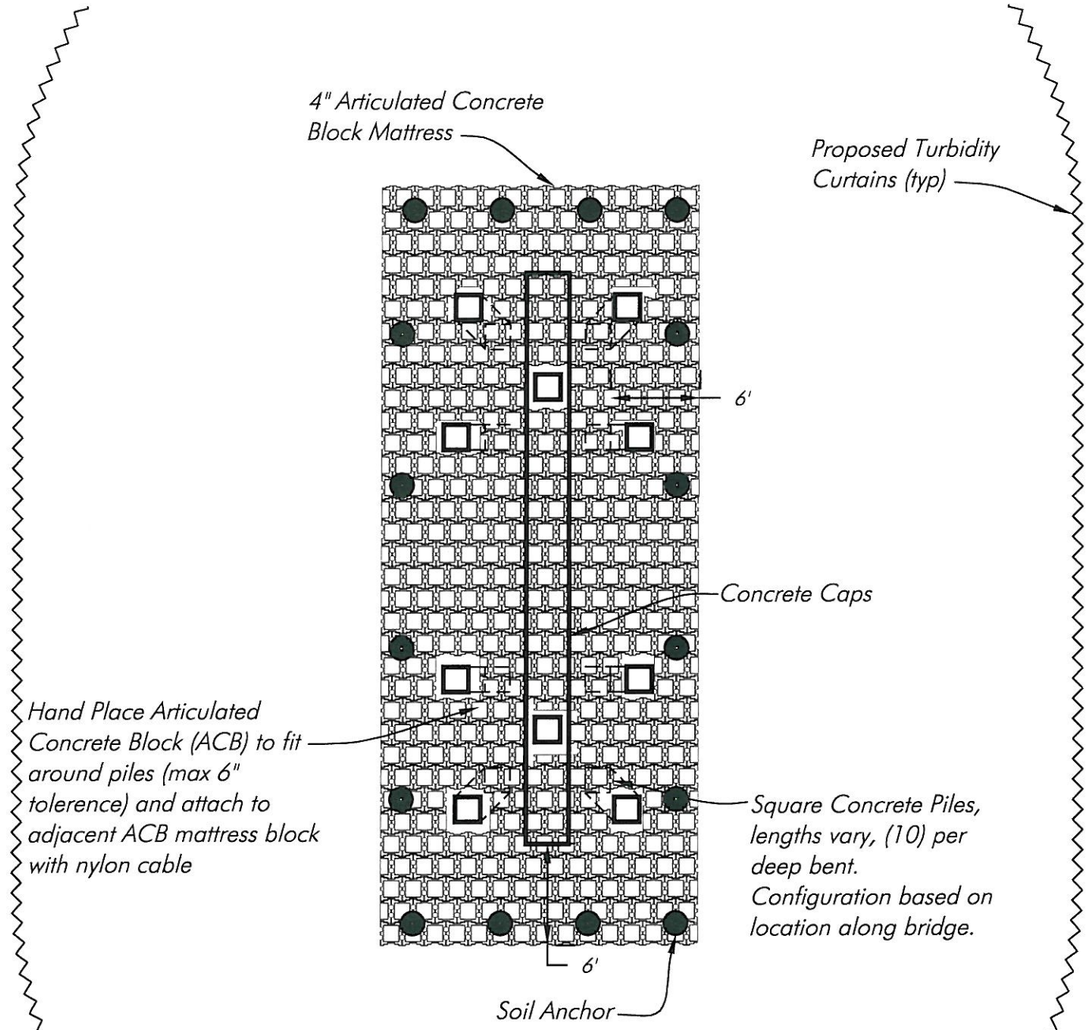

Detail B

Scale 1" = 10'

NOTE: Tide Elevations per FDEP Tide Station 872-5331 Estero Island - Ostego Bay and reference NAVD.

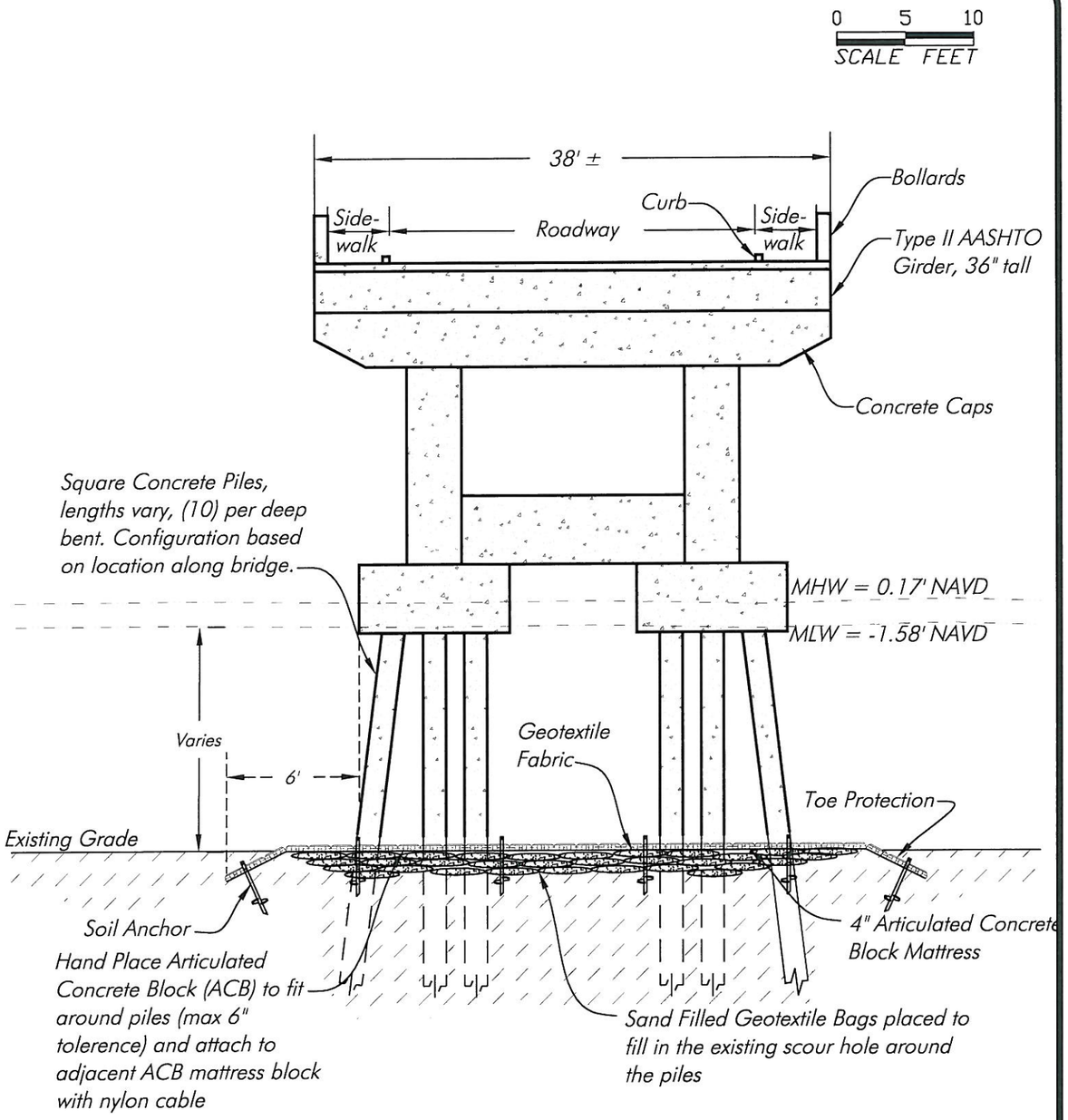

Section B-B

Scale 1" = 10'

Jeffrey C. Birmingham
REGISTERED PROFESSIONAL ENGINEER
FLORIDA REGISTRATION NO. 70789
DATE: March 12, 2012 11:55:31 a.m.
Drawing: LEE15CONSTRUCT.DWG

CONSTRUCTION PERMIT PLANS

HANS WILSON & ASSOC., INC.
1938 Hill Ave. Ft. Myers, Florida 33901
Tel: 239-334-6870 Fax: 239-334-7810
MARINE and ENVIRONMENTAL CONSULTANTS

Detail B and Section B-B

Scale 1" = 10'

3-6-12

TFC

Lee County DOT
Big Carlos Pass Bridge

SHEET 8

BX1-8

SECTION: 3
TOWNSHIP: 47 S
RANGE: 24 E
LATITUDE: 26° 24' 16"
LONGITUDE: 81° 52' 51"

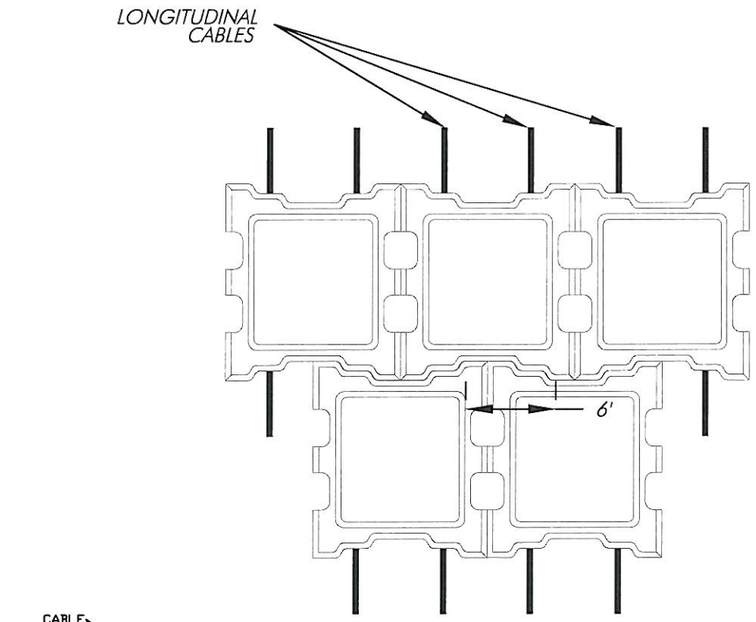

Closed Celled Block Details

N.T.S.

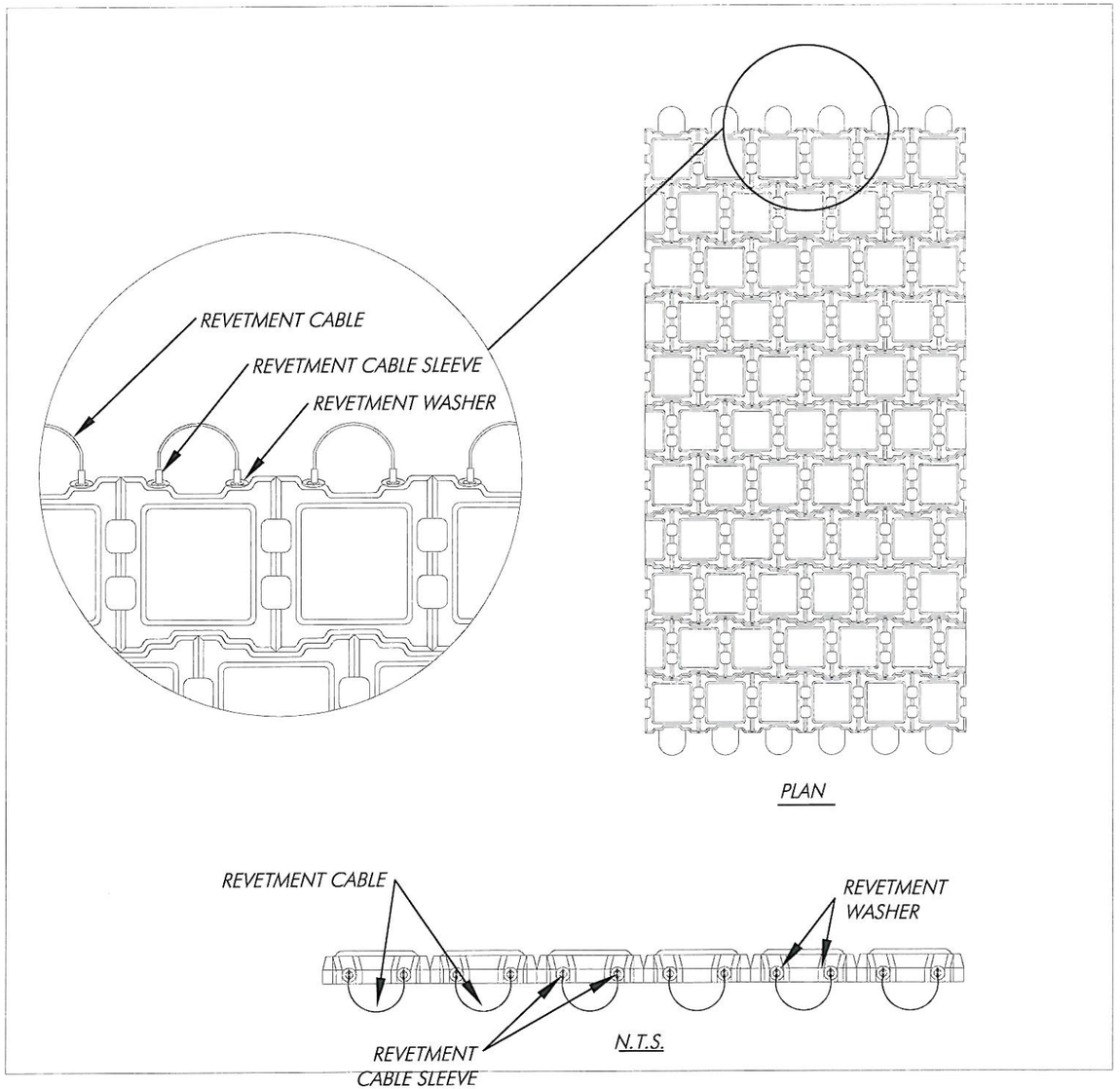

Articulated Concrete Block Mat Details

N.T.S.

Jeffrey C. Birmingham
REGISTERED PROFESSIONAL ENGINEER
FLORIDA REGISTRATION NO. 70789
DATE: March 12, 2012 11:55:31 a.m.
Drawing: LEE15CONSTRUCT.DWG

CONSTRUCTION PERMIT PLANS

HANS WILSON & ASSOC., INC.
1938 Hill Ave. Ft. Myers, Florida 33901
Tel: 239-334-6870 Fax: 239-334-7810
MARINE and ENVIRONMENTAL CONSULTANTS

ACB Details 1

N.T.S.

3-6-12
JCB

Lee County DOT
Big Carlos Pass Bridge

SHEET 9

BX1-9

SECTION: 3
TOWNSHIP: 47 S
RANGE: 24 E
LATITUDE: 26° 24' 16"
LONGITUDE: 81° 52' 51"

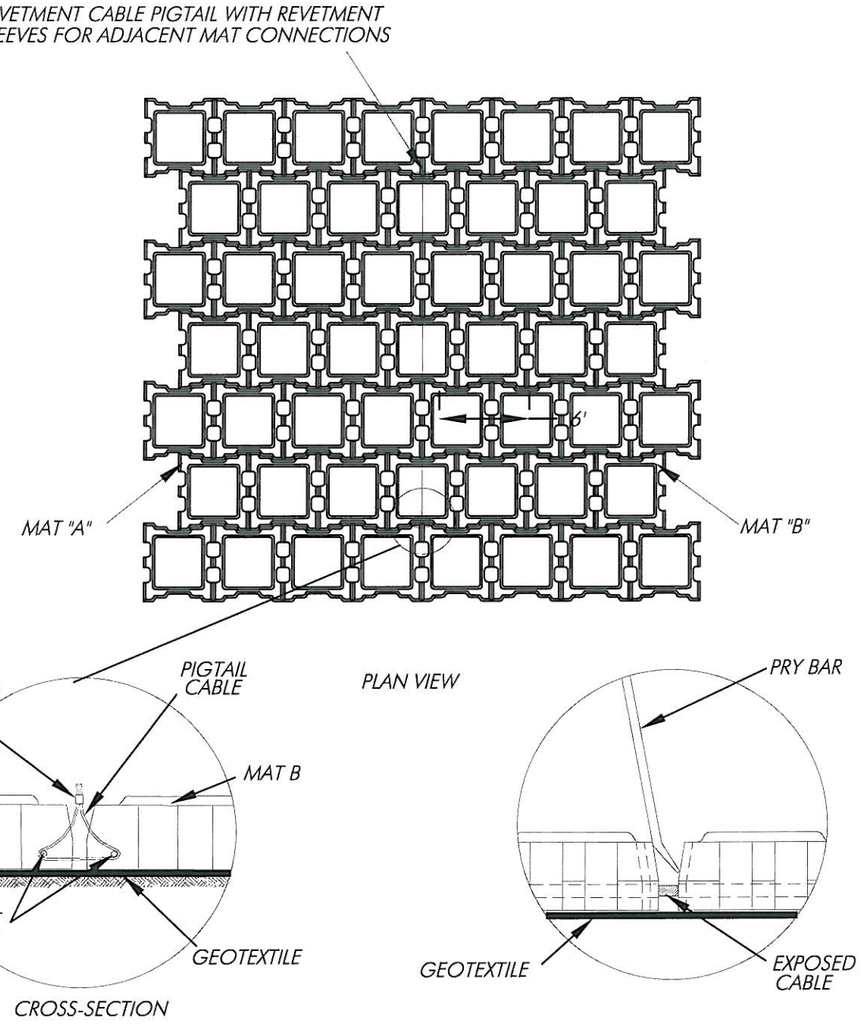

ACB Connection Details

N.T.S.

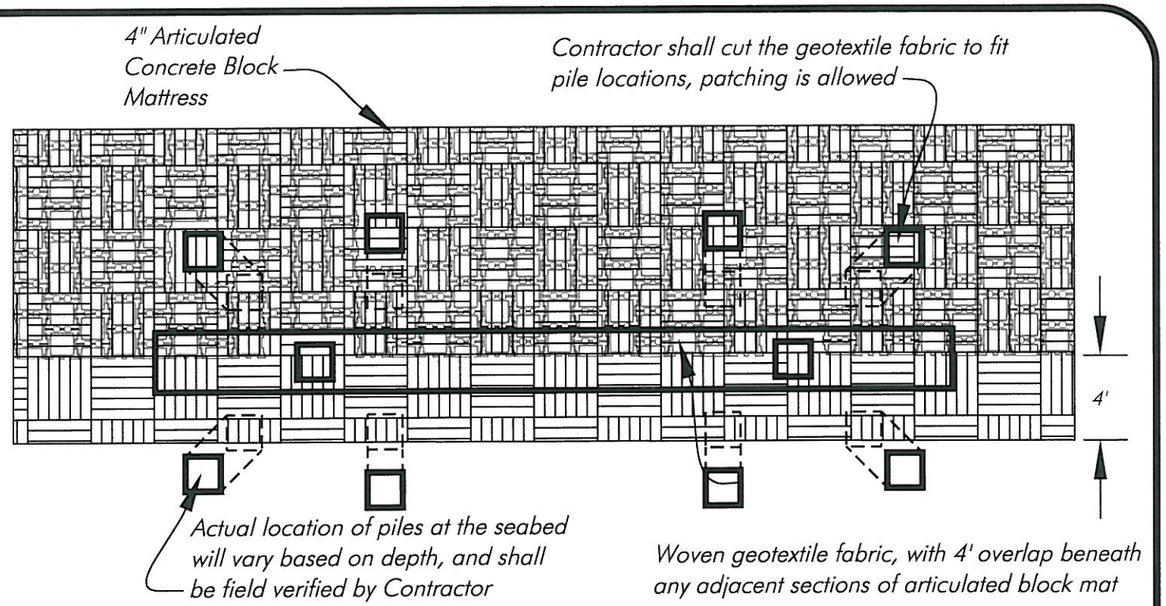

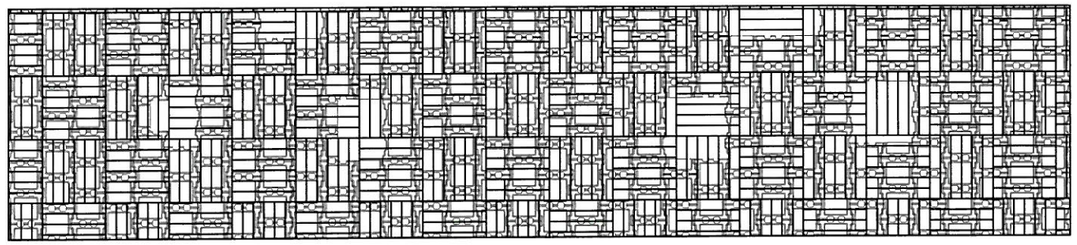

Geotextile Fabric Layout

N.T.S.

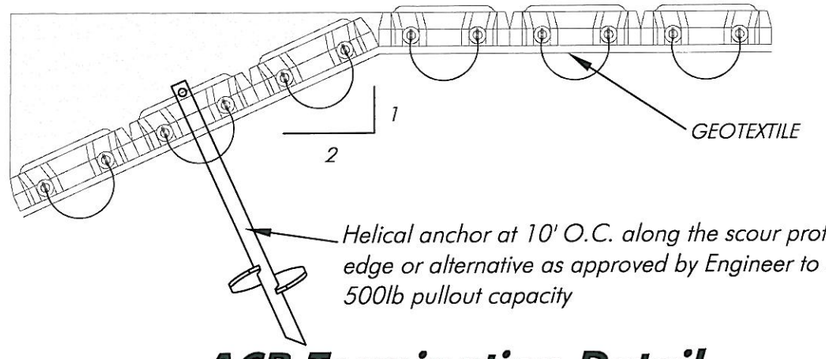

ACB Termination Detail

N.T.S.

Jeffrey C. Birmingham
REGISTERED PROFESSIONAL ENGINEER
FLORIDA REGISTRATION NO. 70789
DATE: March 12, 2012 11:55:31 a.m.
Drawing: LEE15CONSTRUCT.DWG

CONSTRUCTION PERMIT PLANS

HANS WILSON & ASSOC., INC.
1938 Hill Ave. Ft. Myers, Florida 33901
Tel: 239-334-6870 Fax: 239-334-7810
MARINE and ENVIRONMENTAL CONSULTANTS

ACB Details 2

N.T.S.

3-6-12
JCB

Lee County DOT
Big Carlos Pass Bridge

SHEET 10

BX1-10

BX1-11
BX1-11

SECTION: 3
TOWNSHIP: 47 S
RANGE: 24 E
LATITUDE: 26° 24' 16"
LONGITUDE: 81° 52' 51"

0 50 100
SCALE FEET

2010 Lee County Aerial

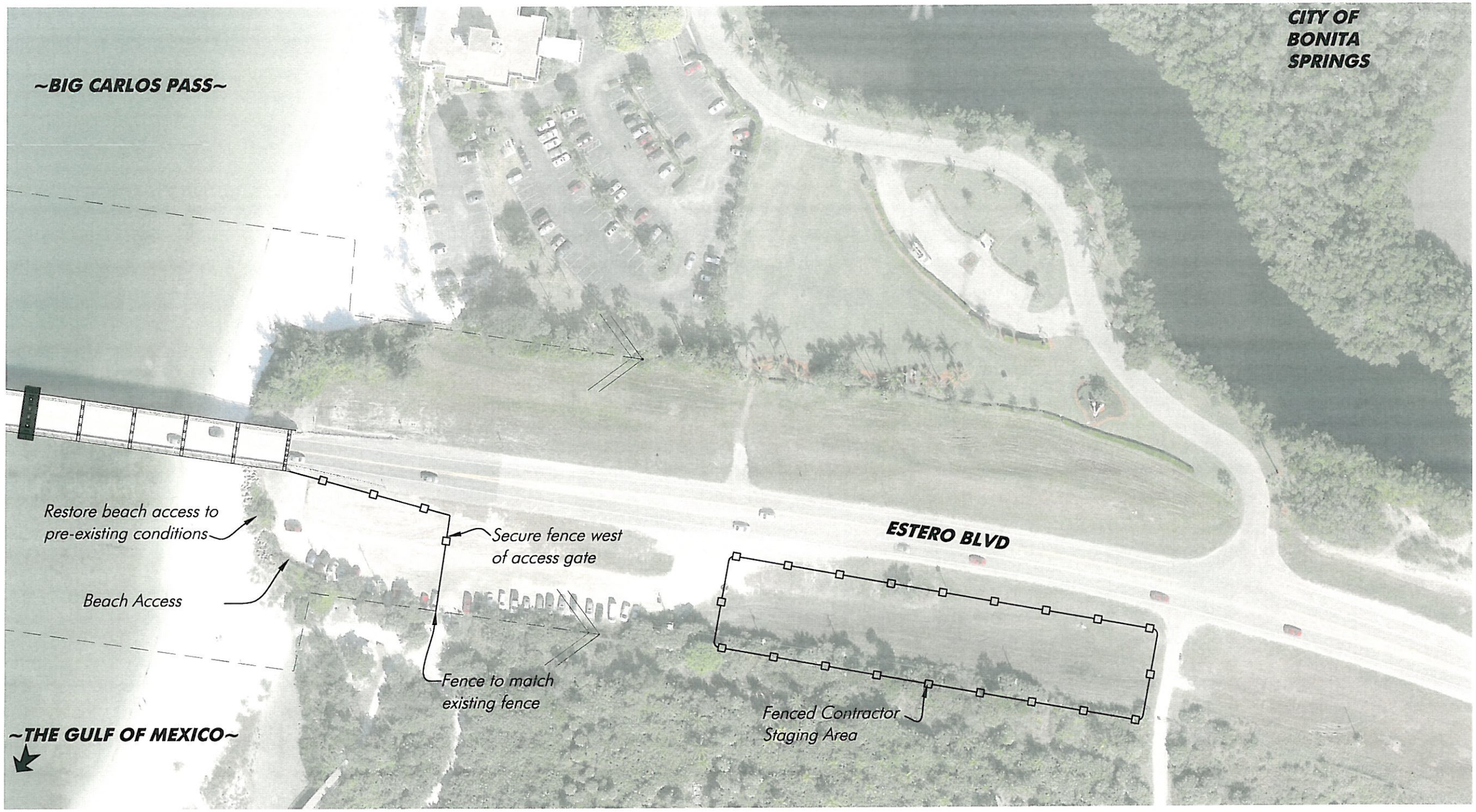

Jeffrey C. Birmingham
REGISTERED PROFESSIONAL ENGINEER
FLORIDA REGISTRATION NO. 70789
DATE: March 12, 2012 11:03:46 a.m.
Drawing: LEE15CONSTRUCT.DWG

CONSTRUCTION PERMIT PLANS

HANS WILSON & ASSOC., INC.
1938 Hill Ave. Ft. Myers, Florida 33901
Tel: 239-334-6870 Fax: 239-334-7810
MARINE and ENVIRONMENTAL CONSULTANTS

Detail C - Construction Staging Area
Scale 1" = 100'

3-6-12
JJB

Lee County DOT
Big Carlos Pass Bridge

SHEET 11

BX1-11
BX1-11

BX1-12

BX1-12

COMPONENTS OF CONTRACT PLANS SET

STRUCTURE PLANS

PROJECT NO.	SHEET NO.
5015	B-1

LEE COUNTY
BOARD OF COUNTY COMMISSIONERS

PUBLIC WORKS ADMINISTRATION
DEPARTMENT OF TRANSPORTATION

CR 866 OVER BIG CARLOS PASS (BRIDGE NO. 120028)

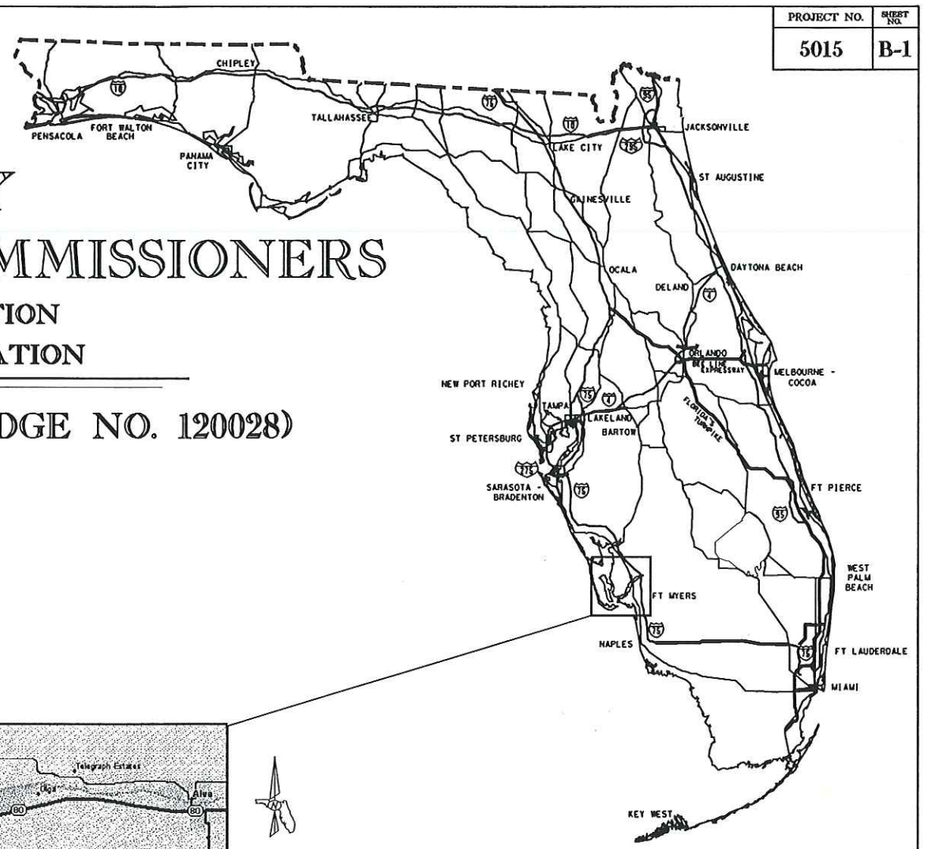

INDEX

SHEET NO.	SHEET DESCRIPTION
B-1	KEY SHEET
B-2	GENERAL NOTES (1 OF 2)
B-3	GENERAL NOTES (2 OF 2)
B-4	PLAN & ELEVATION
B-5	SPAN WORK IDENTIFICATION
B-6	STRUCTURAL STEEL REPAIR DETAILS (1 OF 2)
B-7	STRUCTURAL STEEL REPAIR DETAILS (2 OF 2)
B-8	MAINTENANCE PAINTING OF STRUCTURAL STEEL
B-9	CONCRETE DEFICIENCY LISTS (1 OF 3)
B-10	CONCRETE DEFICIENCY LISTS (2 OF 3)
B-11	CONCRETE DEFICIENCY LISTS (3 OF 3)
B-12	CONCRETE REPAIR DETAILS
B-13	CLEANING AND COATING OF CONCRETE SURFACES
B-14	FENDER SYSTEM REPAIR DETAILS
B-15	PILE JACKETS REPAIR
EB-1 TO EB-42	EXISTING BRIDGE PLANS

GOVERNING STANDARDS AND SPECIFICATIONS.
FLORIDA DEPARTMENT OF TRANSPORTATION,
ROADWAY AND TRAFFIC DESIGN STANDARDS
DATED JANUARY 2005 AND STANDARD
SPECIFICATIONS FOR ROAD AND BRIDGE
CONSTRUCTION DATED 2004, AS AMENDED
BY CONTRACT DOCUMENTS.

APPLICABLE DESIGN STANDARDS MODIFICATIONS, 1-1-06

FOR DESIGN STANDARDS MODIFICATIONS CLICK ON
"DESIGN STANDARDS" AT THE FOLLOWING WEB SITE.
HTTP://WWW.DOT.STATE.FL.US/RDDESIGN/

CR 865 OVER BIG CARLOS PASS
BRIDGE NO 120028

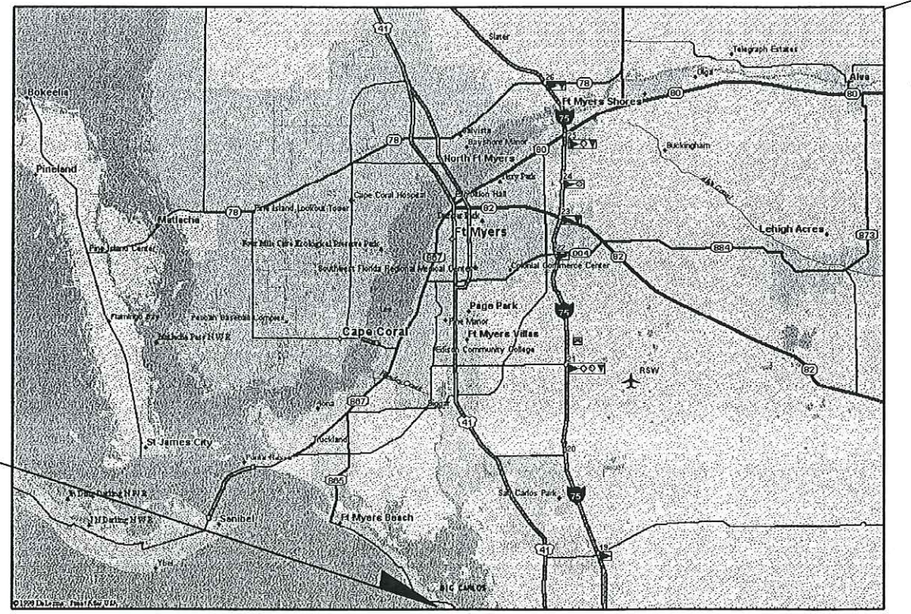

REVISIONS		
DATE	BY	DESCRIPTION

SHOP DRAWINGS TO BE SUBMITTED TO:
DAVID B. THOMPSON, P.E.
KISINGER CAMPO AND ASSOCIATES CORP.
2203 N. LOIS AVENUE, SUITE 1200
TAMPA, FL 33607

PLANS PREPARED BY:
KISINGER CAMPO AND ASSOCIATES CORP.
2203 N. LOIS AVENUE, SUITE 1200
TAMPA, FL 33607
VENDOR NO. 59-1677145
FLORIDA CERT. OF AUTHORIZATION NO. 02317

NOTE:

ATTENTION IS DIRECTED TO THE FACT THAT THESE PLANS MAY HAVE BEEN REDUCED IN SIZE BY REPRODUCTION. DO NOT OBTAIN SCALED DATA.

APPROVED BY: DAVID B. THOMPSON, P.E.

DATE: 1-16-06 FL 45403

P.E. NO.: 45403

EHAB GUIRGUIS, PROJECT MANAGER

19805.03
File Names: KeySheet.DGN REVISION: 0 02/18/00 JCA

BX1-12

BX1-12

BX1-13
BX1-13

DESIGN SPECIFICATIONS :

1. AMERICAN ASSOCIATION OF STATE HIGHWAY AND TRANSPORTATION OFFICIALS (AASHTO) STANDARD SPECIFICATIONS FOR HIGHWAY BRIDGES (17TH EDITION).
2. AASHTO STANDARD SPECIFICATIONS FOR MOVABLE HIGHWAY BRIDGES (1988 WITH REVISIONS THROUGH 1999).
3. FDOT STRUCTURES DESIGN GUIDELINES (2005 EDITION).

SCOPE OF WORK :

1. STRUCTURAL STEEL REPAIR
2. CONCRETE SPALL REPAIR
4. FENDER REPAIR
5. CLEANING & COATING OF CONCRETE SURFACES
6. MAINTENANCE PAINTING OF STRUCTURAL STEEL
7. PILE JACKET REPAIR

DRAWINGS AND DIMENSIONS:

1. DO NOT SCALE DRAWINGS FOR DIMENSIONS NOT GIVEN.

2. VERIFY ALL EXISTING FIELD CONDITIONS AND DIMENSIONS PRIOR TO COMMENCING REPAIRS OR ORDERING ANY MATERIALS. NOTIFY ENGINEER OF ANY DISCREPANCIES FOUND.

ACCESS AND SECURITY:

THE CONTRACTOR SHALL PROVIDE SAFE ACCESS TO ALL WORK AREAS. IT SHALL BE THE CONTRACTOR'S RESPONSIBILITY TO MAINTAIN A SAFE AND SECURE WORK SITE INCLUDING ALL LOCAL WORK SITES, EQUIPMENT, AND STAGING AREAS. FENCING AND OTHER BARRIERS SHALL BE PROVIDED BY THE CONTRACTOR TO PREVENT HARM TO THE PUBLIC.

ENVIRONMENT:

DESCRIPTION: CORROSIVE (EXTREMELY AGGRESSIVE)
LOCATION: COASTAL

ENVIRONMENTAL CONSIDERATION :

STANDARD MANATEE CONSTRUCTION CONDITIONS ARE REQUIRED IN ACCORDANCE WITH THE FDEP BUREAU OF PROTECTED SPECIES MANAGEMENT. ASSOCIATED COSTS SHALL BE INCIDENTAL TO THE PROJECT.

EQUIPMENT:

IT SHALL BE THE CONTRACTOR'S SOLE RESPONSIBILITY TO PROVIDE ALL EQUIPMENT NECESSARY FOR THE COMPLETION OF THE REPAIRS DESCRIBED IN THE PLANS AND SPECIFICATIONS, INCLUDING ITEMS SUCH AS LIGHTING, WORKBOATS AND MOORING ARRANGEMENTS.

MATERIAL PRODUCTS:

1. EXCEPT FOR THOSE MATERIAL PRODUCTS SPECIFICALLY CALLED FOR IN THE PLANS AND SPECIFICATIONS OR APPROVED BY THE ENGINEER, ALL MATERIAL PRODUCTS SPECIFIED FOR THIS PROJECT SHALL BE ON THE FDOT QUALIFIED PRODUCTS LIST.

2. MATERIALS MEETING THE REQUIREMENTS OF THE PLANS AND SPECIFICATIONS SHALL BE INSTALLED IN ACCORDANCE WITH APPROVED MANUFACTURER'S RECOMMENDATIONS.

CONCRETE FINISHES:

FINISH IN ACCORDANCE WITH THE SPECIFICATIONS UNLESS OTHERWISE NOTED.

CONCRETE RESTORATION

1. FOR REQUIREMENTS ON MIX PROPORTIONS, SURFACE PREPARATION, MIXING, PLACING, FINISHING, MATERIALS AND OTHER RELATED ITEMS, REFER TO THE SPECIFICATIONS FOR CONCRETE RESTORATION.

2. FOR VOLUMES OF BAG MIX IN EXCESS OF 1.0 CUBIC FEET AT A SINGLE LOCATION, A MIX PLAN MUST BE SUBMITTED TO THE ENGINEER FOR APPROVAL.

3. AGGREGATE MUST BE ANGULAR GRANITE TYPE. SMOOTH RIVER ROCK IS NOT ALLOWED.

STRUCTURAL STEEL:

1. ALL STRUCTURAL STEEL SHALL BE IN ACCORDANCE WITH ASTM A709, GRADE 36 (AASHTO DESIGNATION M270, GRADE 36). MAXIMUM ULTIMATE DESIGN STRESSES ARE AS FOLLOWS:

	GRADE 36
TENSION	36,000 PSI
SHEAR	21,000 PSI

2. ALL ASTM A709 STRUCTURAL STEEL SHALL BE FABRICATED BY A CERTIFIED SHOP MEETING THE REQUIREMENTS OF AISC CATEGORY Sbr (SIMPLE STEEL BRIDGES) CERTIFICATION. SHOP DRAWINGS ARE REQUIRED ON ALL STRUCTURAL STEEL.

3. BOLTS: ALL FIELD CONNECTIONS SHALL BE MADE WITH HIGH STRENGTH FRICTION TYPE BOLTS IN ACCORDANCE WITH ASTM A325 (TYPE 1), NOT COATED, WITH HARDENED STEEL WASHERS AND HEAVY HEX NUTS, UNLESS OTHERWISE NOTED. CONNECTIONS ARE CONSIDERED "SLIP-CRITICAL". FASTENER COMPONENTS SHALL BE CLEAN OF SCALE AND RUST, LUBRICATED AND TENSIONED ACCORDING TO THE SPECIFICATIONS. BOLTS, NUTS AND WASHERS SHALL BE BLACK AND PAINTED WITH THE STEEL.

WELDING:

1. WELD DETAILS AND THE WELDING OPERATIONS SHALL BE IN ACCORDANCE WITH THE CURRENT EDITION OF THE ANSI/AASHTO/AWS D1.5-96 BRIDGE WELDING CODE. WELDS REQUIRING NON-DESTRUCTIVE TESTING SHALL BE RADIOGRAPHICALLY INSPECTED EXCEPT WHERE THE GEOMETRY OF THE REGION OF THE WELD WILL NOT PERMIT SATISFACTORY INFORMATION TO BE SECURED FOR VERIFICATION OF THE WELD QUALITY. WHEN SUCH GEOMETRICAL CONDITIONS EXIST, OTHER INSPECTION PROCEDURES OR COMBINATIONS OF PROCEDURES SUCH AS ULTRASONIC INSPECTION, DYE PENETRANT INSPECTION, AND/OR MAGNETIC PARTICLE INSPECTION SHALL BE USED.

2. NO WELDING SHALL BE ALLOWED ON THE STRUCTURAL STEEL OTHER THAN THOSE WELDS SHOWN IN THE PLANS AND APPROVED BY THE ENGINEER.

PAINTING:

1. CLEANING AND PAINTING OF NEW STRUCTURAL STEEL AND EXISTING STRUCTURAL STEEL (MAINTENANCE PAINTING) SHALL BE IN ACCORDANCE WITH SECTION 560 OF THE SPECIFICATIONS AND THE TECHNICAL SPECIAL PROVISIONS. THE FINISH COAT COLOR SHALL BE SELECTED BY THE ENGINEER.

2. CLEAN AND PAINT OVER WELDED AREAS OF GALVANIZED STRUCTURAL MEMBERS, AREAS OF PREVIOUSLY PAINTED GALVANIZED MEMBERS AND GALVANIZED MEMBERS ON WHICH THE GALVANIZING HAS, IN THE OPINION OF THE ENGINEER, BECOME SIGNIFICANTLY DAMAGED. REFER TO SECTION 562 OF THE SPECIFICATIONS.

3. IF ANY STRUCTURAL STEEL MEMBERS ARE FOUND TO BE DEFECTIVE AND IN NEED OF REPLACEMENT OR REPAIRS DURING THE CLEANING OPERATION, IN ADDITION TO REPAIRS SPECIFIED, THE CONTRACTOR SHALL PROVIDE DETAILED SHOP DRAWINGS FOR THE REPAIR OF THE STRUCTURAL STEEL FOR THE ENGINEER'S APPROVAL, SIGNED AND SEALED BY A FLORIDA REGISTERED ENGINEER. THE ADDITIONAL REPAIRS WILL BE PAID UNDER PAY ITEM NO. 460-95, STRUCTURAL STEEL REPAIR (PER LB).

4. CLEAN AND PAINT REPAIRED STEEL ACCORDING TO THE SPECIFICATIONS AFTER THE COMPLETION OF EACH REPAIR. PAINTING COSTS ASSOCIATED WITH EACH REPAIR SHALL BE CONSIDERED INCIDENTAL TO THE INDIVIDUAL REPAIR PAY ITEMS.

D.B.T
FL 45403
1-16-06

BRIDGE NO. 120028

$$$$$$$DGNSPECIFICATION$$$$$$$

$$$$$$$SYTIMESTAMP$$$$

REVISIONS					
DATE	BY	DESCRIPTION	DATE	BY	DESCRIPTION

	NAMES	DATES
DRAWN BY	PDM	8/05
CHECKED BY	DBT	8/05
DESIGNED BY	PDM	8/05
CHECKED BY	DBT	8/05
APPROVED BY	D.B. THOMPSON	

ENGINEER OF RECORD:
Kisinger Campo and Associates Corp.
2203 N. LOIS AVE.
SUITE 1200
TAMPA, FLORIDA 33607
Florida Cert. of Authorization No. 02317
David B. Thompson, P.E. No. 45403

LOGO:

DEPARTMENT OF TRANSPORTATION

SHEET TITLE:	GENERAL NOTES (1 OF 2)
PROJECT NAME:	BIG CARLOS BASCULE BRIDGE REPAIR
SHEET NO.	B-2

BX1-13
BX1-13

BX1-14

MAINTENANCE OF TRAFFIC:

1. CONTRACTOR MUST PLAN, SCHEDULE, AND COORDINATE ALL REPAIRS THAT AFFECT BOTH VEHICLE AND MARINE TRAFFIC IN ACCORDANCE WITH THE SPECIFICATIONS.

2. TRAFFIC CONTROL FOR CONSTRUCTION SHALL BE IN ACCORDANCE WITH INDEX SERIES 600 OF THE FDOT ROADWAY AND TRAFFIC DESIGN STANDARDS.

3. THE CONTRACTOR SHALL NOTIFY THE U.S. COAST GUARD MARINE SAFETY OFFICE IN TAMPA AT LEAST 30 DAYS IN ADVANCE FOR APPROVAL OF CONSTRUCTION ACTIVITIES WHICH REDUCE ANY HORIZONTAL OR VERTICAL CLEARANCE OF THE BRIDGE OR WILL REQUIRE FLOATING EQUIPMENT IN THE WATERWAY THAT MAY IMPEDE NAVIGATION. THE U.S. COAST GUARD MARINE SAFETY OFFICE CONTACT NUMBER IS (813) 228-2189.

4. THE CONTRACTOR SHALL NOTIFY THE U.S. COAST GUARD BRIDGE ADMINISTRATION OFFICE IN MIAMI AT LEAST 30 DAYS IN ADVANCE FOR APPROVAL OF CONSTRUCTION ACTIVITIES WHICH WILL AFFECT THE OPENING OF THE DRAWBRIDGES AT ANY TIME OR REDUCE THE HORIZONTAL OR VERTICAL CLEARANCE OF THE BRIDGE. THE U.S. COAST GUARD BRIDGE ADMINISTRATION OFFICE PHONE NUMBER IS (305) 415-6755.

5. THE CONTRACTOR WILL BE RESPONSIBLE FOR MONITORING VHF CHANNELS 13 AND 16 DURING WORK HOURS FOR MARINER'S INQUIRIES.

6. THE NORMAL OPERATIONS FOR DRAW BRIDGE OPENINGS (MANNED BY A BRIDGE TENDER) ARE AS FOLLOWS:

   8 AM TO 7 PM, 7 DAYS A WEEK

7. THE CONTRACTOR MAY PERFORM WORK THAT DOES NOT RESTRICT VEHICULAR OR MARINE TRAFFIC AT ANY TIME DURING THE DAY OR NIGHT. THE CONTRACTOR SHALL NOTIFY THE ENGINEER 72 HOURS IN ADVANCE OF ANY NIGHT WORK.

8. SINGLE LANE CLOSURES ARE PERMITTED ON THE BRIDGE EXCEPT NO LANE CLOSURES ARE PERMITED FROM 7 AM TO 9 AM AND 4 PM TO 6 PM MON - FRI. NOTIFY LEE COUNTY 72 HOURS IN ADVANCE OF ANY SINGLE LANE CLOSURES.

9. BRIDGE REPAIRS, INCLUDING PAINTING, SHALL BE COMPLETED WITH AT LEAST ONE LANE OPEN AT ALL TIMES TO VEHICULAR TRAFFIC.

10. ALL LABOR, MATERIAL AND EQUIPMENT NECESSARY TO PROPERLY MAINTAIN TRAFFIC WILL BE INCLUDED IN PAY ITEM 102-1, MAINTENANCE OF TRAFFIC, LUMP SUM.

SUBMITTALS:

THE CONTRACTOR SHALL SUBMIT DETAILED SHOP DRAWINGS AND/OR MANUFACTURER'S LITERATURE FOR ALL NEW COMPONENTS TO BECOME PART OF THE REHABILITATED STRUCTURE. SUCH DRAWINGS SHALL INCLUDE ALL DIMENSIONS, FITS, FINISHES, MATERIALS, AND SPECIAL INSTRUCTIONS REQUIRED TO PROPERLY CONSTRUCT, FABRICATE, AND INSTALL THESE COMPONENTS. FIELD VERIFIED DIMENSIONS SHALL BE SHOWN AND CLEARLY IDENTIFIED AS SUCH IN THE SHOP DRAWINGS. THE CONTRACTOR SHALL NOT ORDER MATERIALS UNTIL THE SHOP DRAWINGS AND/OR MANUFACTURER'S LITERATURE HAS BEEN APPROVED BY THE ENGINEER.

UTILITIES:

THE CONTRACTOR SHALL BE RESPONSIBLE FOR LOCATING ALL UTILITIES PRIOR TO COMMENCING WITH CONSTRUCTION. THE CONTRACTOR SHALL CONTACT SUNSHINE AT (800) 432-4770 AND ANY OTHER LOCAL UTILITIES TO VERIFY EXISTING UTILITIES AT SITE OF CONSTRUCTION. UTILITIES SHALL BE PROTECTED DURING ALL PHASES OF CONSTRUCTION. IF ANY EXISTING UTILITIES CONFLICT WITH PROPOSED CONSTRUCTION METHODS, MATERIALS, OR EQUIPMENT, THE CONTRACTOR SHALL NOTIFY THE ENGINEER.

POLLUTION CONTROL:

THE CONTRACTOR SHALL SUBMIT A POLLUTION CONTROL PLAN TO THE ENGINEER FOR APPROVAL PRIOR TO COMMENCING ANY CONSTRUCTION ACTIVITIES.

PAY ITEM NOTES:

1. QUANTITIES SHOWN FOR THE PAY ITEMS HAVE BEEN ESTIMATED FROM FIELD OBSERVATION AND INSPECTION REPORTS.

2. PAYMENT FOR INCIDENTAL ITEMS NOT SPECIFICALLY COVERED IN THE INDIVIDUAL BID ITEMS SHALL BE INCLUDED IN THE CONTRACT UNIT PRICE FOR BID ITEMS CONTAINED IN THIS CONTRACT.

$$$$$$DGNSPECIFICATION$$$$$$

$$$$$$SYTIMEMEMBERS$$$$

D.B.T.
FL 45403
1-16-06

BRIDGE NO. 120028

REVISIONS					
DATE	BY	DESCRIPTION	DATE	BY	DESCRIPTION

	NAMES	DATES
DRAWN BY	PDM	8/05
CHECKED BY	DBT	8/05
DESIGNED BY	PDM	8/05
CHECKED BY	DBT	8/05
APPROVED BY	D.B. THOMPSON	

ENGINEER OF RECORD:
Kisinger Campo and Associates Corp.
2203 N. LOIS AVE.
SUITE 1200
TAMPA, FLORIDA 33607
Florida Cert. of Authorization No. 02317
David B. Thompson, P.E. No. 45403

LOGO:

DEPARTMENT OF TRANSPORTATION

SHEET TITLE: GENERAL NOTES (2 OF 2)

PROJECT NAME: BIG CARLOS BASCULE BRIDGE REPAIR

SHEET NO. B-3

BX1-14

BX1-15

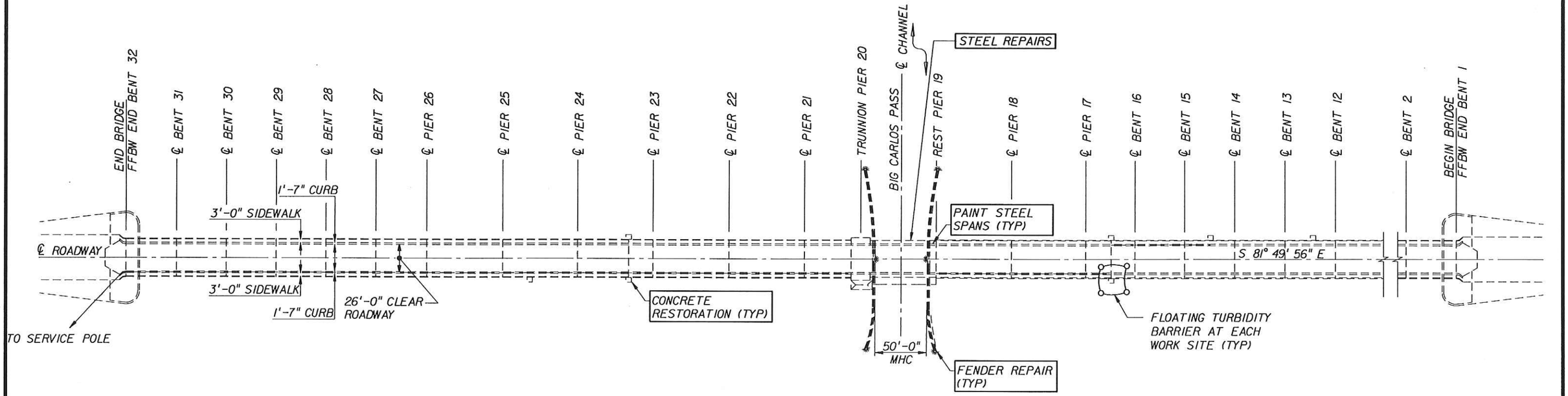

PLAN

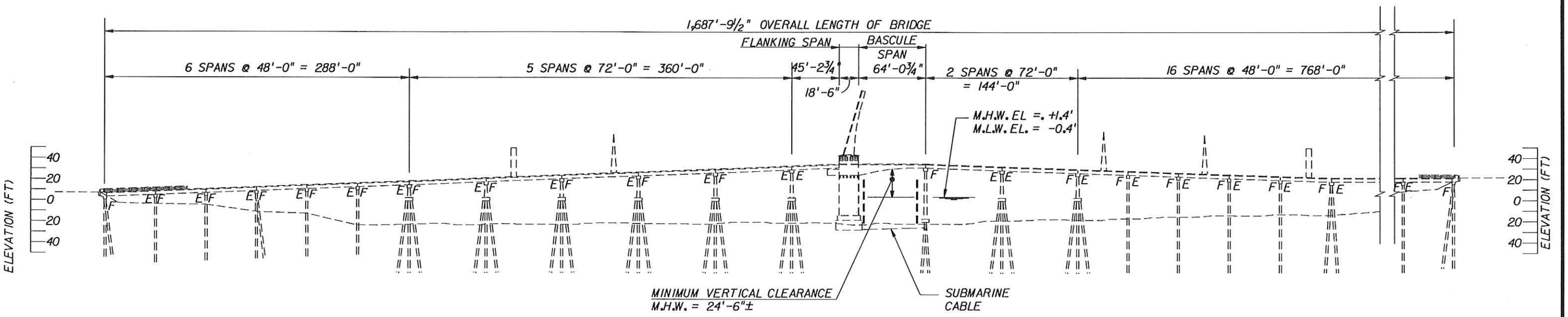

ELEVATION

D.B.T.
FL 45403
1-16-06

BRIDGE NO. 120028

$$$$$$$$DGNSPECIFICATION$$$$$$$$

$$$$$$$$STYLE$$$$$$$$

REVISIONS					
DATE	BY	DESCRIPTION	DATE	BY	DESCRIPTION

	NAMES	DATES
DRAWN BY	PDM	8/05
CHECKED BY	DBT	8/05
DESIGNED BY	PDM	8/05
CHECKED BY	DBT	8/05
APPROVED BY	D.B. THOMPSON	

ENGINEER OF RECORD:
Kisinger Campo and Associates Corp.
2203 N. LOIS AVE.
SUITE 1200
TAMPA, FLORIDA 33607
Florida Cert. of Authorization No. 02317
David B. Thompson, P.E. No. 45403

LOGO:

LEE COUNTY

DEPARTMENT OF TRANSPORTATION

SHEET TITLE:
PLAN AND ELEVATION

PROJECT NAME:
BIG CARLOS BASCULE BRIDGE REPAIR

SHEET NO.
B-4

BX1-15

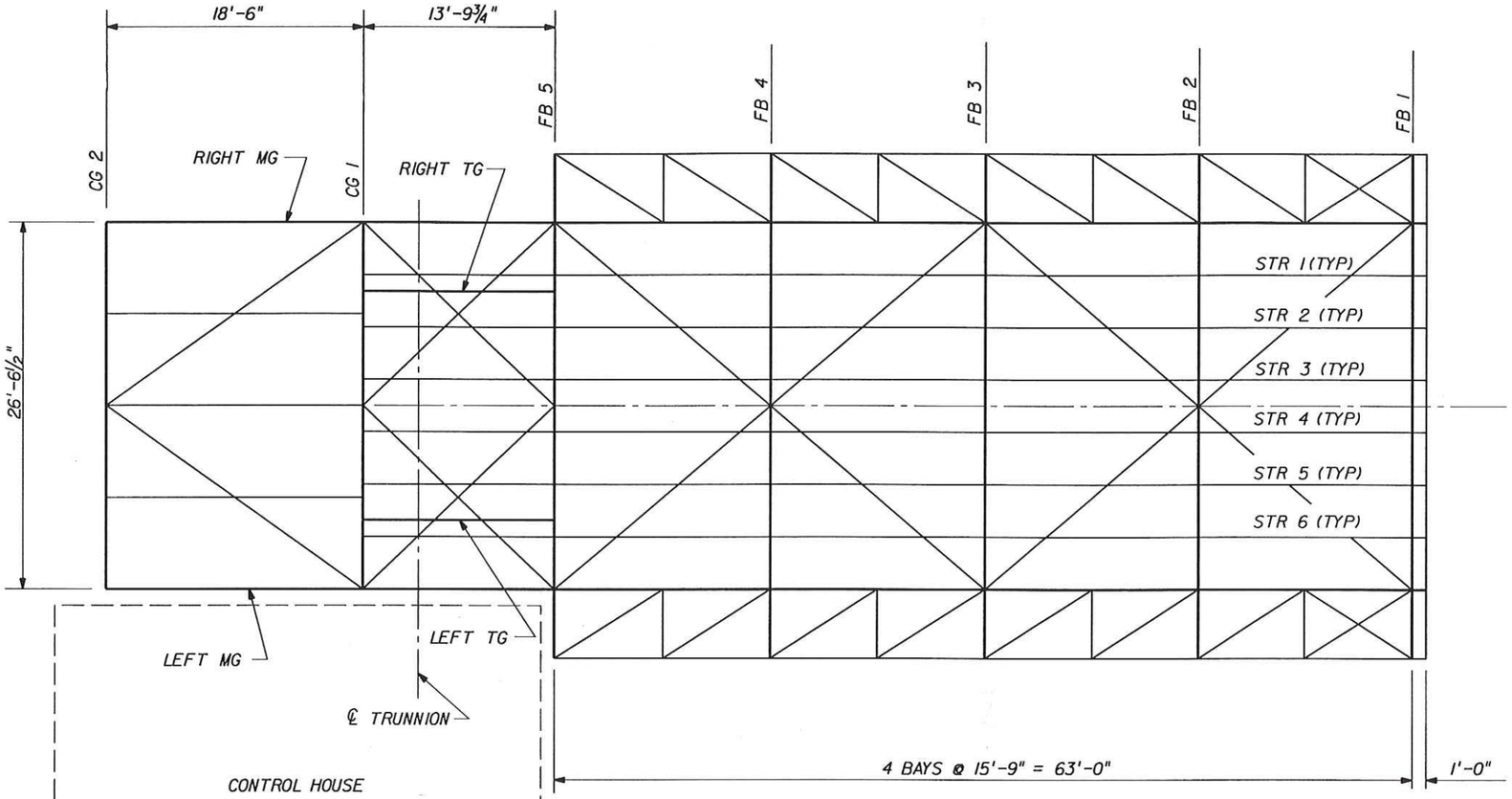

FRAMING PLAN

WORK IDENTIFICATION:

1. PERFORM CLEANING AND MAINTENANCE PAINTING OF STEEL SPANS. REFER TO SHEET B-8 FOR DETAILS.
2. REPLACE MISSING OR CORRODED RIVETS/BOLTS WITH BOLTS ON BOTH MAIN GIRDERS. REPAIR STRUCTURAL STEEL. REFER TO SHEET B-6 FOR REPAIR DETAILS.
3. REPLACE STEEL FLOOR GRATING IN DECK SIDEWALK. REPAIR BROKEN GRATING WELDS. REFER TO SHEET B-7 FOR REPAIR DETAILS.

LEGEND:

MG - MAIN GIRDER
FB - FLOOR BEAM
TG - TRUNNION GIRDER
CG - COUNTERWEIGHT GIRDER
STR - STRINGER

D.B.T.
FL 45403
1-16-06

BRIDGE NO. 120028

REVISIONS					
DATE	BY	DESCRIPTION	DATE	BY	DESCRIPTION

	NAMES	DATES
DRAWN BY	PDM	8/05
CHECKED BY	DBT	8/05
DESIGNED BY	PDM	8/05
CHECKED BY	DBT	8/05
APPROVED BY	D.B. THOMPSON	

ENGINEER OF RECORD:
Kisinger Campo and Associates Corp.
2203 N. LOIS AVE.
SUITE 1200
TAMPA, FLORIDA 33607
Florida Cert. of Authorization No. 02317
David B. Thompson, P.E. No. 45403

LOGO: KCA

LEE COUNTY

DEPARTMENT OF TRANSPORTATION

SHEET TITLE: SPAN WORK IDENTIFICATION

PROJECT NAME: BIG CARLOS BASCULE BRIDGE REPAIR

SHEET NO. B-5

$$$$$$$DGNSPECIFICATION$$$$$$$
$$$$$$SYTIME$$$$$$

BX1-17

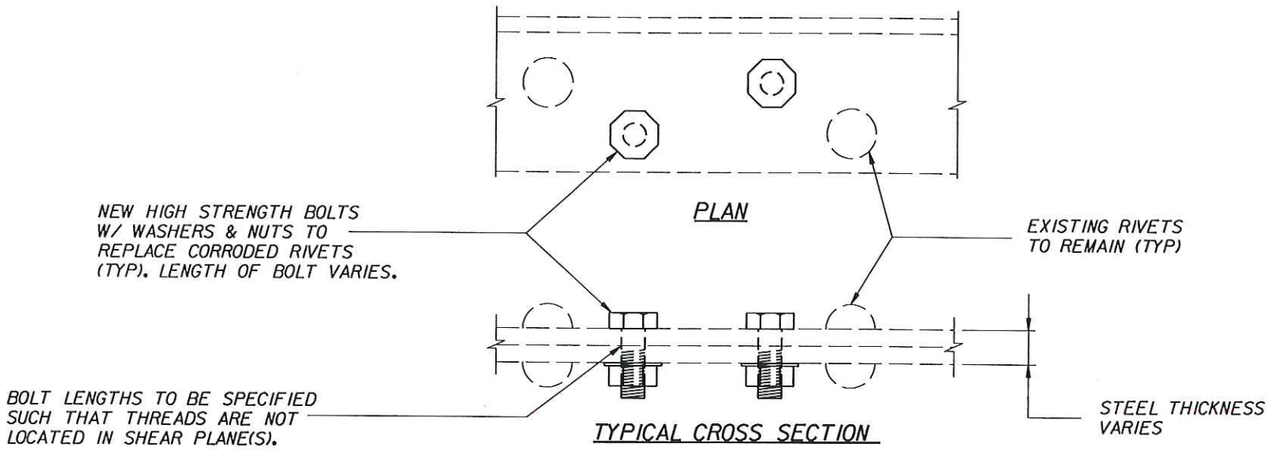

① RIVET REPLACEMENT WITH HIGH STRENGTH BOLT

NOTES:

1. REPLACE ALL RIVETS OR BOLTS AND NUTS WITH 20% OR GREATER SECTION LOSS AS DIRECTED BY THE ENGINEER AT TIME OF REPAIR.
2. REMOVE THE DAMAGED RIVET HEAD BY MECHANICAL MEANS AND THEN MECHANICALLY EXTRACT RIVET. DO NOT USE A CUTTING TORCH WITHOUT THE ENGINEER'S APPROVAL. DRILL OR REAM TO PROVIDE A CLEAN BOLT HOLE.
3. INSTALL NEW HIGH STRENGTH BOLT (ASTM A325) WITH HARDENED WASHER AND HEAVY HEX NUT. BOLT DIAMETER IS TYPICALLY 7/8", HOWEVER, BOLT DIAMETER TO BE INCREASED AS NECESSARY TO PROVIDE MAXIMUM CLEARANCE OF 1/8" ON NEWLY DRILLED HOLE DIAMETER. BOLT LENGTHS TO BE APPROVED BY THE ENGINEER.
4. BOLTS SHALL BE PROPERLY LUBRICATED AND TENSIONED ACCORDING TO THE SPECIFICATIONS.
5. CLEAN AND PAINT NEW BOLT AND IMMEDIATE AREA OF REPAIR ACCORDING TO THE SPECIFICATIONS AFTER COMPLETION OF REPAIR.
6. PAY ITEM 460-81, RIVET OR HIGH STRENGTH BOLT REPLACEMENT (EA), SHALL INCLUDE ALL WORK DESCRIBED ABOVE FOR THE REMOVAL OF EXISTING RIVET OR BOLT AND INSTALLATION OF NEW BOLT.

WORK IDENTIFICATION:

① REPLACE RIVETS OR BOLTS AND NUTS W/ 20% OR GREATER SECTION LOSS

② AFTER SANDBLASTING STRUCTURAL STEEL FOR PAINTING, REPAIR AREAS OF DETERIORATION (WORK THIS SHEET WITH SHEET B-8)

EXISTING AREAS OF DETERIORATION

ELEMENT	LOCATION	DESCRIPTION
GIRDER 1	TOP FLANGE PLATES ALONG EDGES AT BASCULE PIER, REST PIER, CANTILEVERED SIDEWALK SUPPORT CONNECTIONS, AND LATERAL BRACING GUSSET PLATE CONNECTIONS	HEAVY SECTION LOSS
GIRDER 2	TOP FLANGE PLATES ALONG EDGES AT BASCULE PIER, REST PIER, CANTILEVERED SIDEWALK SUPPORT CONNECTIONS, AND LATERAL BRACING GUSSET PLATE CONNECTIONS	HEAVY SECTION LOSS
S/W SUPPORTS & LATERAL BRACING	TIE PLATES FOR CANTILEVERED S/W LATERAL BRACING GUSSET PLATES	60-90% SECTION LOSS SOME W/ CORR. HOLES SEVERE SECTION LOSS
STRINGER 1	FLOOR BEAM 19-5	3/8" DEEP PAINTED OVER PITTING IN LOWER PORTION OF WEB W/ 3/16" DIA. CORR.
STRINGER 2	CONNECTION TO FLOOR BEAM 19-5	CORR. W/ 3/16" WEB PITTING
STRINGER 3	BETWEEN FLOOR BEAMS 19-1 & 19-2	4' LONG HEAVY CORROSION 1/4" DEEP PITTING ON EAST SIDE OF TOP FLANGE
STRINGER 3	CONNECTION TO FLOOR BEAM 19-4	CORR. W/ 1/4"-5/16" DEEP
STRINGER 3	CONNECTION TO FLOOR BEAM 19-5	CORR. W/ 3/16" WEB PITTING
STRINGER 4	BETWEEN FLOOR BEAMS 19-1 & 19-2	20-60% SECTION LOSS ON TOP FLANGE THROUGHOUT LENGTH
STRINGER 4	WEST SIDE BETWEEN FLOOR BEAMS 19-1 & 19-2	1' LONG AREA W/ SEVERAL 3.5" x 2" CORROSION HOLES
STRINGER 5	CONNECTION TO FLOOR BEAM 19-4	CORR. W/ 1/4"-5/16" DEEP PITTING IN BOTTOM FLANGE
WEST STRINGER	UNDER BASCULE PIER SIDEWALK	HEAVY CORROSION W/ 1/8" REMAINING FLANGE THICKNESS IN EAST SIDE OF BOTTOM FLANGE
EAST STRINGER	UNDER BASCULE PIER SIDEWALK	HEAVY CORROSION W/ 3/16" PITTING IN BOTH FLANGES
FLOOR BEAM 19-1	BOTTOM CORNER	2" LONG X 1 1/2" HIGH MODERATE SECTION LOSS
COUNTERWEIGHT GIRDERS	OVER BASCULE PIER 20	PACK RUST
COUNTERWEIGHT SUPPORT STEEL	SEVERAL LOCATIONS	LIGHT TO MODERATE SURFACE CORROSION
LADDER RUNGS	LOWER FENDER ACCESS LADDER	MODERATE TO HEAVY CORROSION
ANCHOR BOLTS/ SUPPORT BRACKETS	PLATFORM AT THE REST PIER FENDER ACCESS LADDER	HEAVY CORROSION
PAINTED STEEL CAP BEAM	BOTTOM FLANGE AT ENDS OF BEAM	MODERATE CORR. BLEED THROUGH W/ 3/16" PITTING
PAINTED STEEL CAP BEAM	TOP FLANGE AT ENDS OF BEAM	MODERATE CORR. BLEED THROUGH W/ 3/16" PITTING

BRIDGE NO. 120028

D.B.T.
FL 45403
1-16-06

$$$$$$$DGNSPECIFICATION$$$$$$$

$$$$$$SYTIMEDWGS$$$

REVISIONS					
DATE	BY	DESCRIPTION	DATE	BY	DESCRIPTION

	NAMES	DATES
DRAWN BY	PDM	8/05
CHECKED BY	DBT	8/05
DESIGNED BY	PDM	8/05
CHECKED BY	DBT	8/05
APPROVED BY	D.B. THOMPSON	

ENGINEER OF RECORD:
Kisinger Campo and Associates Corp.
2203 N. LOIS AVE.
SUITE 1200
TAMPA, FLORIDA 33607
Florida Cert. of Authorization No. 02317
David B. Thompson, P.E. No. 45403

LOGO: KCA

LEE COUNTY

DEPARTMENT OF TRANSPORTATION

SHEET TITLE: STRUCTURAL STEEL REPAIR DETAILS (1 OF 2)

PROJECT NAME: BIG CARLOS BASCULE BRIDGE REPAIR

SHEET NO. B-6

BX1-17

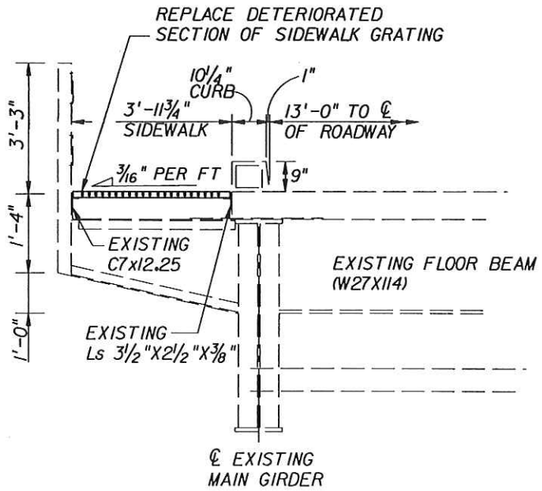

PARTIAL SIDEWALK ELEVATION

SOUTH SIDE OF STEEL SPAN NEAR WEST END

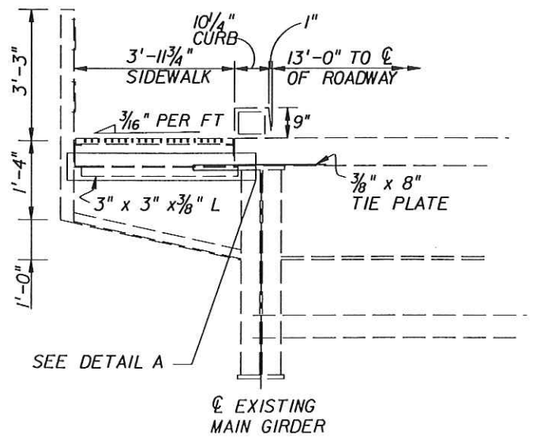

PARTIAL SIDEWALK ELEVATION

TYPICAL

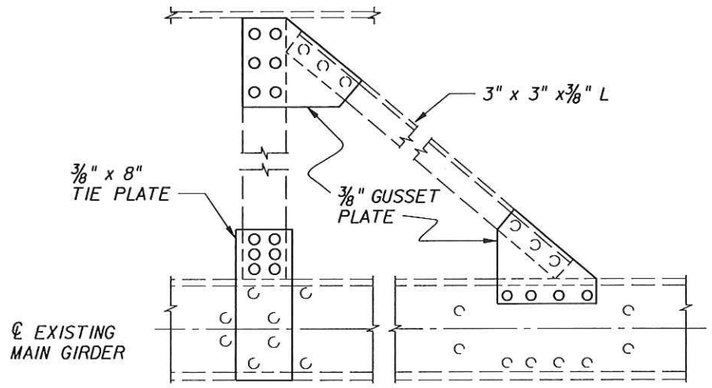

DETAIL A

SIDEWALK BRACING
DIAGONAL CONNECTION PLATE DETAIL

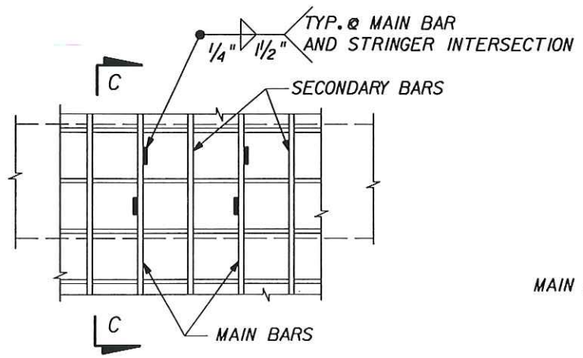

PARTIAL PLAN VIEW

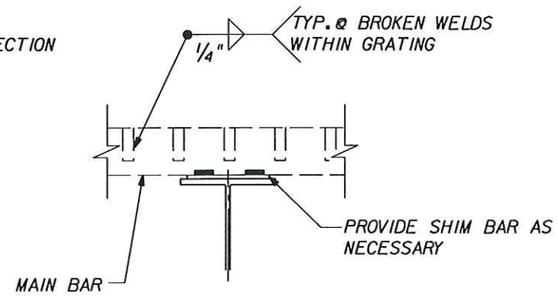

SECTION C-C THROUGH ROADWAY GRATING

WORK IDENTIFICATION:

REPAIR BROKEN WELDS ON BRIDGE DECK AND DETERIORATED STRUCTURAL STEEL.

NOTES:

1. CLOSE TRAFFIC LANE ABOVE WELDS TO BE REPAIRED. A SINGLE 11'-0" LANE SHALL REMAIN OPEN AT ALL TIMES DURING REPAIR CONSTRUCTION. REFER TO THE GENERAL NOTES (SHEET B-3) FOR MAINTENANCE OF TRAFFIC NOTES AND LIMITATIONS.
2. THOUROUGHLY INSPECT ALL DECK ATTACHMENT WELDS THROUGHOUT THE ENTIRE OPEN GRATING AREA. IDENTIFY AND RECORD GENERAL AREAS OF BROKEN WELDS AND DETERIORATIONS FOR PROPOSED REPAIR.
3. REPAIR AREAS OF BROKEN DECK WELDS WITH NEW WELDS ON BOTH SIDES.
4. CONTRACTOR TO SUBMIT WELD PROCEDURE TO ENGINEER FOR APPROVAL PRIOR TO REPAIRS.
5. CONTRACTOR TO SUBMIT WELDERS CERTIFICATION FOR WELD REPAIR PROCESS FOR VERIFICATION PRIOR TO WELD REPAIRS.
6. AFTER SANDBLASTING, CONTRACTOR TO PROVIDE SHOP DRAWING OF REPAIR PROCEDURE FOR CRITICAL DETERIORATED AREAS WITH 30% OR GREATER SECTION LOSS.
7. REPLACE IN-KIND SOUTH SIDEWALK GRATING SECTION (NEAR BASCULE PIER) WITH GREATER THAN 30% SECTION LOSS.
8. REPLACE OVERHANG DIAGONAL CONNECTION GUSSET PLATES AND TIE PLATES SHOWING 30% SECTION LOSS.
9. PAYMENT FOR ALL WORK ASSOCIATED WITH REPAIR DECK WELDS, CONNECTION PLATE REPAIR, AND OTHER MISCELLANEOUS STEEL REPAIR, WILL BE INCIDENTAL TO PAY ITEM 460-95, STRUCTURAL STEEL REPAIR (LB).

D.B.T.
FL 45403
1-16-06

BRIDGE NO. 120028

$$$$$$$$DGNSPECIFICATION$$$$$$$$

$$$$$$$$TIMESTAMP$$$$$$$$

REVISIONS					
DATE	BY	DESCRIPTION	DATE	BY	DESCRIPTION

	NAMES	DATES
DRAWN BY	PDM	8/05
CHECKED BY	DBT	8/05
DESIGNED BY	PDM	8/05
CHECKED BY	DBT	8/05
APPROVED BY	D.B. THOMPSON	

ENGINEER OF RECORD:
Kisinger Campo and Associates Corp.
2203 N. LOIS AVE.
SUITE 1200
TAMPA, FLORIDA 33607
Florida Cert. of Authorization No. 02317
David B. Thompson, P.E. No. 45403

LOGO:

LEE COUNTY

DEPARTMENT OF TRANSPORTATION

SHEET TITLE: STRUCTURAL STEEL REPAIR DETAILS (2 OF 2)

PROJECT NAME: BIG CARLOS BASCULE BRIDGE REPAIR

SHEET NO. B-7

BX1-18

BX1-19

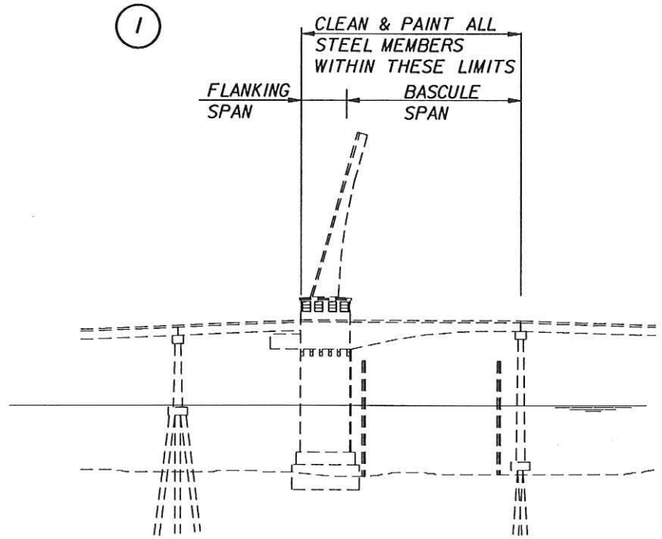

PARTIAL ELEVATION

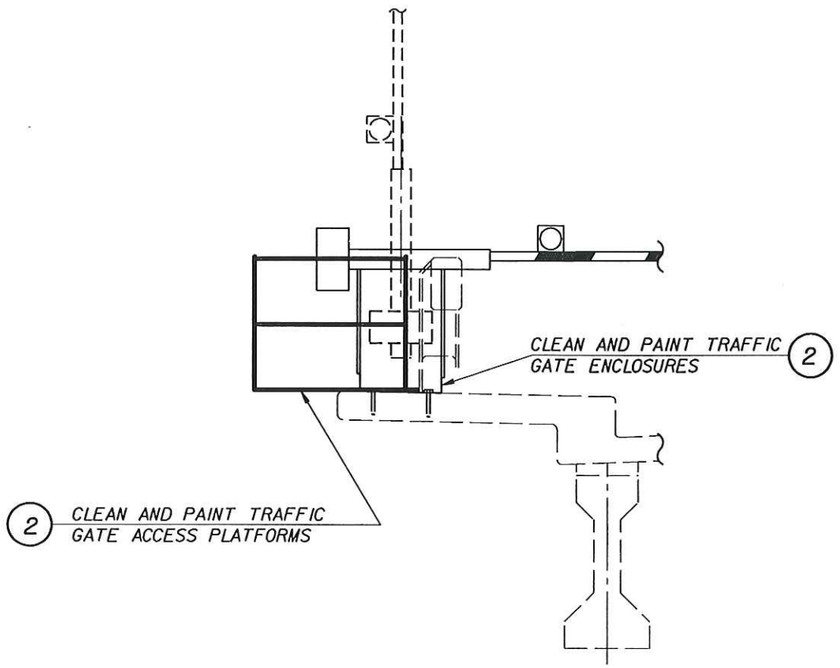

PARTIAL CROSS SECTION AT
TRAFFIC GATE AND PLATFORM

ESTIMATED QUANTITIES FOR STEEL PAINTING		
ITEM	BIG CARLOS DRAW BRIDGE	
	SQ. FT.	LBS.
BASCULE LEAF		182,000
ROADWAY FLOOR (5" DEEP)	1,785	
ROADWAY FLOOR (3" DEEP)	389	
SIDEWALK FLOOR (1 1/4" DEEP)	525	
FLANKING SPANS		35,250
FLANKING SPANS, LADDERS & PLATFORMS		
MAIN PIER		457
REST PIER		1,963
TRUNNION PIER		15,400
BEARING SHOE ASSEMBLIES (86 TOTAL)		

WORK IDENTIFICATION:

(1) CLEAN AND PAINT STEEL.

(2) CLEAN AND PAINT STEEL TRAFFIC GATE ENCLOSURES AND PLATFORMS

NOTES:

1. PAINTING TO INCLUDE ALL STEEL (INCLUDING LADDERS AND PLATFORMS) WITHIN THE STEEL SPANS (BASCULE AND FLANKING), ALL EXPOSED STEEL ON THE TRAFFIC GATE ENCLOSURES AND ACCESS PLATFORMS, AND BEARING ASSEMBLIES.
2. DO NOT PAINT THE TOP SIDE OF THE STEEL FLOOR GRATING. DO NOT PAINT THE UNDERSIDE OF THE STEEL FLOOR GRATING EXCEPT AS NOTED IN THE GENERAL NOTES (SHEET B-2), PAINTING NOTE 2.
3. PAINTING SHALL CONFORM TO SECTION 560 OF THE FDOT SPECIFICATIONS - MAINTENANCE PAINTING OF STRUCTRUAL STEEL AND THE TECHNICAL SPECIAL PROVISIONS.
4. REFER TO EXISTING BRIDGE PLANS FOR ADDITIONAL INFORMATION REGARDING FRAMING PLAN AND STRUCTURAL STEEL DETAILS.
5. REFER TO GENERAL NOTES (SHEET B-2) PAINTING NOTE 3 FOR DETERIORATION FOUND BEYOND 30% OF MEMBER'S SECTION.
6. CONTRACTOR TO SUBMIT POLLUTION CONTROL PLAN TO BE APPROVED BY THE ENGINEER. CONTAINMENT METHODS TO BE IN ACCORDANCE WITH FDOT STANDARD SPECIFICATIONS AND THE TECHNICAL SPECIAL PROVISIONS.
7. THE COST OF REMOVING THE EXISTING PAINT AND PAINTING THE STRUCTURE AS DESCRIBED ON THIS SHEET AND IN THE SPECIFICATIONS SHALL BE PAID FOR UNDER PAY ITEM 560-1, MAINTENANCE PAINTING OF STRUCTURAL STEEL, LUMP SUM, AND SHALL INCLUDE THE REMOVAL AND DISPOSAL OF HAZARDOUS MATERIALS.

D.B.T
FL 45403
1-16-06

BRIDGE NO. 120028

$$$$$$$DGNSPECIFICATION$$$$$$$

$$$$$$$SYTIMESTAMP$$$$$$$

REVISIONS					
DATE	BY	DESCRIPTION	DATE	BY	DESCRIPTION

	NAMES	DATES
DRAWN BY	PDM	8/05
CHECKED BY	DBT	8/05
DESIGNED BY	PDM	8/05
CHECKED BY	DBT	8/05
APPROVED BY	D.B. THOMPSON	

ENGINEER OF RECORD:
Kisinger Campo and Associates Corp.
2203 N. LOIS AVE.
SUITE 1200
TAMPA, FLORIDA 33607
Florida Cert. of Authorization No. 02317
David B. Thompson, P.E. No. 45403

LOGO:

DEPARTMENT OF TRANSPORTATION

SHEET TITLE: MAINTENANCE PAINTING OF STRUCTURAL STEEL

PROJECT NAME: BIG CARLOS BASCULE BRIDGE REPAIR

SHEET NO. B-8

BX1-19

BX1-20
BX1-20

SPAN	ELEMENT	LOCATION	DESCRIPTION	SIZE
1	DECK	ALL	CRACKING	2% OF DECK, UP TO 1/64" WIDE
	RAIL	LEFT	OK	
		RIGHT	OK	
	SIDEWALK	ALL	DELAMINATED AREA, SPALLS, CRACKS	5% TO 10%, 80% TO 90% SPAN LENGTH
	GIRDER	BEAM 1 RIGHT FACE, ABUT. 1	DELAMINATED AREA	2' x 1' x 4"
	BENT/PIER	ALL	OK	
2	DECK	ALL	CRACKING	2% OF DECK, UP TO 1/64" WIDE
	RAIL	LEFT RAIL 3	DELAMINATED AREA	1.5' L x 4" W
		RIGHT	OK	
	SIDEWALK	ALL	DELAMINATED AREA, SPALLS, CRACKS	5% TO 10%, 80% TO 90% SPAN LENGTH
	GIRDER	BEAM 2, BENT 2	SPALL W/ EXPOSED CORRODED STEEL	2' L x 1.3' W x 2" D
	BENT/PIER	LOWER EAST FACE	PATCH W/ SHRINKAGE CRACKS	1/64" WIDE
		WEST FACE	DELAMINATED AREA	2.8' W x 6.5" H
3	DECK	ALL	CRACKING	2% OF DECK, UP TO 1/64" WIDE
	RAIL	LEFT	OK	
		RIGHT	OK	
	SIDEWALK	ALL	DELAMINATED AREA, SPALLS, CRACKS	5% TO 10%, 80% TO 90% SPAN LENGTH
	GIRDER	BEAM 3 RIGHT FACE, BENT 4	DELAMINATED AREA	2' x 1' x 4"
	BENT/PIER	SOUTH FACE	SPALL W/ EXPOSED CORRODED REBAR	1' L x 8" W x 4" D
		NORTH FACE	DELAMINATED AREA	8" H x 6" W
4	DECK	ALL	CRACKING	2% OF DECK, UP TO 1/64" WIDE
		SOUTHBOUND SHOULDER	SPALLED/DELAMINATED AREA	2' L x 2' W x 0.25" D"
	RAIL	LEFT	OK	
		RIGHT	OK	
	SIDEWALK	ALL	DELAMINATED AREA, SPALLS, CRACKS	5% TO 10%, 80% TO 90% SPAN LENGTH
	GIRDER	BEAM 2 RIGHT FACE, BENT 4	DELAMINATED AREA	2' x 1' x 4"
		BEAM 4 RIGHT FACE, BENT 5	EXPOSED REBAR AT WEB	
	BENT/PIER	ALL	OK	
5	DECK	ALL	CRACKING	2% OF DECK, UP TO 1/64" WIDE
	RAIL	LEFT	OK	
		RIGHT	OK	
	SIDEWALK	ALL	DELAMINATED AREA, SPALLS, CRACKS	5% TO 10%, 80% TO 90% SPAN LENGTH
	GIRDER	BEAM 1 LEFT FACE, BENT 5	EXPOSED REBAR AT WEB	
	BENT/PIER	WEST FACE	VEGETATION	
6	DECK	ALL	CRACKING	2% OF DECK, UP TO 1/64" WIDE
	RAIL	LEFT POST 8	CRACKING	UP TO 1/8" WIDE"
		RIGHT	OK	
	SIDEWALK	ALL	DELAMINATED AREA, SPALLS, CRACKS	5% TO 10%, 80% TO 90% SPAN LENGTH
	GIRDER	BEAM 2 RIGHT FACE, BENT 7	EXPOSED PRESTRESSED STRANDS	
	BENT/PIER	WEST FACE	DELAMINATED AREA, CRACK	2' x 1' x 4"
7	DECK	ALL	CRACKING	2% OF DECK, UP TO 1/64" WIDE
	RAIL	LEFT	OK	
		RIGHT	OK	
	SIDEWALK	ALL	DELAMINATED AREA, SPALLS, CRACKS	5% TO 10%, 80% TO 90% SPAN LENGTH
	GIRDER	BEAM 2 RIGHT FACE, BENT 8	EXPOSED PRESTRESSED STRANDS	
	BENT/PIER	WEST FACE	DELAMINATED AREA	6" ACROSS FACE
8	DECK	ALL	CRACKING	2% OF DECK, UP TO 1/64" WIDE
	RAIL	LEFT	OK	
		RIGHT	OK	
	SIDEWALK	ALL	DELAMINATED AREA, SPALLS, CRACKS	5% TO 10%, 80% TO 90% SPAN LENGTH
	GIRDER	BEAM 1 LEFT FACE, BENT 9	DELAMINATED AREA	2' x 1' x 4"
		BEAM 2 RIGHT FACE, BENT 9	EXPOSED PRESTRESSED STRANDS	
	BENT/PIER	ALL	OK	
9	DECK	ALL	CRACKING	2% OF DECK, UP TO 1/64" WIDE
	RAIL	LEFT	OK	
		RIGHT	OK	
	SIDEWALK	ALL	DELAMINATED AREA, SPALLS, CRACKS	5% TO 10%, 80% TO 90% SPAN LENGTH
	GIRDER	ALL	OK	
	BENT/PIER	ALL	OK	
10	DECK	ALL	CRACKING	2% OF DECK, UP TO 1/64" WIDE
	RAIL	LEFT POST 5	CRACKING	UP TO 1/8" WIDE
		RIGHT	OK	
	SIDEWALK	ALL	DELAMINATED AREA, SPALLS, CRACKS	5% TO 10%, 80% TO 90% SPAN LENGTH
	GIRDER	ALL	OK	
	BENT/PIER	WEST FACE	HORIZONTAL CRACK	1/16" W x FACE WIDTH
11	DECK	ALL	CRACKING	2% OF DECK, UP TO 1/64" WIDE
	RAIL	LEFT	OK	
		RIGHT	OK	
	SIDEWALK	ALL	DELAMINATED AREA, SPALLS, CRACKS	5% TO 10%, 80% TO 90% SPAN LENGTH
	GIRDER	BEAM 3 LEFT FACE, BENT 12	EXPOSED PRESTRESSED STRANDS	
	BENT/PIER	SOUTH FACE	DIAGONAL CRACK	1/16" WIDE
		WEST FACE	HORIZONTAL CRACK	1/64" WIDE
		WEST FACE	EXPOSED REBAR	

ABBREVIATIONS

L/R	LEFT/RIGHT STATIONS AHEAD
W	WIDTH
H	HEIGHT
L	LENGTH
D	DEPTH

DEFICIENCY NOTES:

1. SEE SHEET B-12 FOR GENERAL METHOD OF REPAIR.
2. DEFICIENCIES ARE NOT NECESSARILY LIMITED TO THOSE SHOWN.
3. AREAS NOTED AS DELAMINATION MAY INCLUDE CRACKS AND SPALLS.
4. BENT/PIER DEFICIENCIES CORRESPOND TO THE BENT/PIER NUMBERED THE SAME AS THE SPAN NUMBER UNLESS OTHERWISE NOTED.
5. DUE TO TIME LAPSE SINCE INSPECTION, DEFICIENCIES MAY HAVE DETERIORATED OR INCREASED IN NUMBER. NOTIFY THE ENGINEER OF SIGNIFICANT CHANGES PRIOR TO REPAIR.

BRIDGE NO. 120028

D.B.T.
FL 45403
1-16-06

$$$$$$$$DGNSPECIFICATION$$$$$$$$

$$$$$$$SYTIMESTAMP$$$$$$$

REVISIONS

DATE	BY	DESCRIPTION	DATE	BY	DESCRIPTION

	NAMES	DATES
DRAWN BY	PDM	8/05
CHECKED BY	DBT	8/05
DESIGNED BY	PDM	8/05
CHECKED BY	DBT	8/05
APPROVED BY	D.B. THOMPSON	

ENGINEER OF RECORD:
Kisinger Campo and Associates Corp.
2203 N. LOIS AVE.
SUITE 1200
TAMPA, FLORIDA 33607
Florida Cert. of Authorization No. 02317
David B. Thompson, P.E. No. 45403

LOGO: KCA

LEE COUNTY

DEPARTMENT OF TRANSPORTATION

SHEET TITLE: CONCRETE DEFICIENCY LISTS (1 OF 3)

PROJECT NAME: BIG CARLOS BASCULE BRIDGE REPAIR

SHEET NO. B-9

BX1-20
BX1-20

BX1-21

SPAN	ELEMENT	LOCATION	DESCRIPTION	SIZE
12	DECK	ALL	CRACKING	2% OF DECK, UP TO 1/64" WIDE
		RIGHT SHOULDER	SPILLED CONCRETE AREAS	UP TO 4" W x 1.5" H
	RAIL	LEFT	OK	
		RIGHT	OK	
	SIDEWALK	ALL	DELAMINATED AREA, SPALLS, CRACKS	5% TO 10%, 80% TO 90% SPAN LENGTH
	GIRDER	BEAM 1 LEFT FACE, BENT 13	EXPOSED REBAR	
	BENT/PIER	WEST FACE	VEGETATION	
13	DECK	ALL	CRACKING	2% OF DECK, UP TO 1/64" WIDE
	RAIL	LEFT	OK	
		RIGHT	OK	
	SIDEWALK	ALL	DELAMINATED AREA, SPALLS, CRACKS	5% TO 10%, 80% TO 90% SPAN LENGTH
	GIRDER	BEAM 1 LEFT FACE, BENT 13	EXPOSED REBAR	
	BENT/PIER	ALL	OK	
14	DECK	ALL	CRACKING	2% OF DECK, UP TO 1/64" WIDE
	RAIL	LEFT	OK	
		RIGHT	OK	
	SIDEWALK	ALL	DELAMINATED AREA, SPALLS, CRACKS	5% TO 10%, 80% TO 90% SPAN LENGTH
	GIRDER	BEAM 4 RIGHT FACE, BENT 14	EXPOSED PRESTRESSED STRANDS	
		BEAM 4 RIGHT FACE, BENT 15	EXPOSED PRESTRESSED STRANDS	
	BENT/PIER	WEST FACE	VEGETATION	
		WEST FACE	HORIZONTAL CRACK	1/16" W
15	DECK	ALL	CRACKING	2% OF DECK, UP TO 1/64" WIDE
	RAIL	LEFT	OK	
		RIGHT	OK	
	SIDEWALK	ALL	DELAMINATED AREA, SPALLS, CRACKS	5% TO 10%, 80% TO 90% SPAN LENGTH
	GIRDER	ALL	OK	
	BENT/PIER	ALL	OK	
16	DECK	ALL	CRACKING	2% OF DECK, UP TO 1/64" WIDE
	RAIL	LEFT	OK	
		RIGHT	OK	
	SIDEWALK	ALL	DELAMINATED AREA, SPALLS, CRACKS	5% TO 10%, 80% TO 90% SPAN LENGTH
	GIRDER	ALL	OK	
	BENT/PIER	WEST FACE	DELAMINATED AREA	1.2' H x 7" W
17	DECK	ALL	CRACKING	2% OF DECK, UP TO 1/64" WIDE
		NORTH BOUND	SPALL W/ EXPOSED CORRODED REBAR	3" DIAMETER x 0.25" D
	RAIL	LEFT	OK	
		RIGHT	OK	
	SIDEWALK	ALL	DELAMINATED AREA, SPALLS, CRACKS	5% TO 10%, 80% TO 90% SPAN LENGTH
	GIRDER	BEAM 1 LEFT FACE, PIER 17	EXPOSED PRESTRESSED STRANDS	
		BEAM 1 BOTH FACES, PIER 18	EXPOSED PRESTRESSED STRANDS	
		BEAM 5 BOTH FACES, PIER 17	EXPOSED PRESTRESSED STRANDS	
	BENT/PIER	ALL	OK	
18	DECK	ALL	CRACKING	2% OF DECK, UP TO 1/64" WIDE
	RAIL	LEFT	OK	
		RIGHT	OK	
	SIDEWALK	ALL	DELAMINATED AREA, SPALLS, CRACKS	5% TO 10%, 80% TO 90% SPAN LENGTH
	GIRDER	BEAM 1, PIER 19	EXPOSED REBAR	8" LONG
	BENT/PIER	ALL	OK	
19	DECK	ALL	CRACKING	2% OF DECK, UP TO 1/64" WIDE
	RAIL	LEFT	OK	
		RIGHT	OK	
	SIDEWALK	ALL	DELAMINATED AREA, SPALLS, CRACKS	5% TO 10%, 80% TO 90% SPAN LENGTH
	GIRDER	ALL	OK	
	BENT/PIER	SOUTH FACE	SPALLED DELAMINATED AREA	5.6' L x 10" H x 3" D
		SOUTH FACE	DELAMINATED AREA	1' H x 1' W
		SOUTH FACE	DELAMINATED AREA W/ CRACK	6' L DELAMINATED, 1/16" W CRACK
20	DECK	ALL	CRACKING	2% OF DECK, UP TO 1/64" WIDE
		ALONG LEFT CURB	DELAMINATED AREA	2' L x 2' W
	RAIL	LEFT RAIL 1	CRACKS AND DELAMINATED AREA	3' L x FULL WIDTH
		RIGHT	OK	
	SIDEWALK	ALL	DELAMINATED AREA, SPALLS, CRACKS	5% TO 10%, 80% TO 90% SPAN LENGTH
	GIRDER	ALL	OK	
	BENT/PIER	ALL	OK	
21	DECK	ALL	CRACKING	2% OF DECK, UP TO 1/64" WIDE
	RAIL	LEFT	OK	
		RIGHT POST 5	SPALL W/ EXPOSED CORRODED REBAR	8" H x 2" W x 1" D
	SIDEWALK	ALL	DELAMINATED AREA, SPALLS, CRACKS	5% TO 10%, 80% TO 90% SPAN LENGTH
	GIRDER	BEAM 5 LEFT FACE, PIER 22	EXPOSED PRESTRESSED STRANDS	
		BEAM 5 RIGHT FACE, PIER 22	EXPOSED REBAR	
	BENT/PIER	NORTH FACE	TRANSVERSE CRACK	1/16" W x 1.3' L"
22	DECK	ALL	CRACKING	2% OF DECK, UP TO 1/64" WIDE
	RAIL	LEFT	OK	
		RIGHT	OK	
	SIDEWALK	ALL	DELAMINATED AREA, SPALLS, CRACKS	5% TO 10%, 80% TO 90% SPAN LENGTH
	GIRDER	BEAM 1 RIGHT FACE, PIER 22	EXPOSED PRESTRESSED STRANDS	
	BENT/PIER	ALL	OK	

$$$$$$$DGNSPECIFICATION$$$$$$$
$$$$$$$SXTIMESTAMPS

D.B.T.
FL 45403
1-16-06

BRIDGE NO. 120028

REVISIONS

DATE	BY	DESCRIPTION	DATE	BY	DESCRIPTION

	NAMES	DATES
DRAWN BY	PDM	8/05
CHECKED BY	DBT	8/05
DESIGNED BY	PDM	8/05
CHECKED BY	DBT	8/05
APPROVED BY	D.B. THOMPSON	

ENGINEER OF RECORD:
Kisinger Campo and Associates Corp.
2203 N. LOIS AVE.
SUITE 1200
TAMPA, FLORIDA 33607
Florida Cert. of Authorization No. 02317
David B. Thompson, P.E. No. 45403

LOGO:

DEPARTMENT OF TRANSPORTATION

SHEET TITLE:
CONCRETE DEFICIENCY LISTS (2 OF 3)

PROJECT NAME:
BIG CARLOS BASCULE BRIDGE REPAIR

SHEET NO.
B-10

BX1-21

BX1-22

SPAN	ELEMENT	LOCATION	DESCRIPTION	SIZE
23	DECK	ALL	CRACKING	2% OF DECK, UP TO 1/64" WIDE
	RAIL	LEFT	OK	
		RIGHT	OK	
	SIDEWALK	ALL	DELAMINATED AREA, SPALLS, CRACKS	5% TO 10%, 80% TO 90% SPAN LENGTH
	GIRDER	BEAM 2 LEFT FACE, PIER 23	EXPOSED PRESTRESSED STRANDS	
	BENT/PIER	ALL	OK	
24	DECK	ALL	CRACKING	2% OF DECK, UP TO 1/64" WIDE
	RAIL	LEFT	OK	
		RIGHT	OK	
	SIDEWALK	ALL	DELAMINATED AREA, SPALLS, CRACKS	5% TO 10%, 80% TO 90% SPAN LENGTH
	GIRDER	BEAM 3 RIGHT FACE, PIER 24	EXPOSED PRESTRESSED STRANDS	
		BEAM 5 BOTH FACES, PIER 24	EXPOSED PRESTRESSED STRANDS	
		BEAM 5 LEFT FACE, PIER 25	EXPOSED PRESTRESSED STRANDS	
	BENT/PIER	ALL	OK	
25	DECK	ALL	CRACKING	2% OF DECK, UP TO 1/64" WIDE
	RAIL	LEFT	OK	
		RIGHT	OK	
	SIDEWALK	ALL	DELAMINATED AREA, SPALLS, CRACKS	5% TO 10%, 80% TO 90% SPAN LENGTH
	GIRDER	BEAM 1 LEFT FACE, PIER 25	EXPOSED PRESTRESSED STRANDS	
	BENT/PIER	SOUTH FACE	DELAMINATED AREA	1.8' W x 5" H
26	DECK	ALL	CRACKING	2% OF DECK, UP TO 1/64" WIDE
	RAIL	LEFT	OK	
		RIGHT	OK	
	SIDEWALK	ALL	DELAMINATED AREA, SPALLS, CRACKS	5% TO 10%, 80% TO 90% SPAN LENGTH
	GIRDER	BEAM 3 LEFT FACE, BENT 27	EXPOSED PRESTRESSED STRANDS	
		BEAM 4 LEFT FACE, PIER 26	DELAMINATED AREA	2' x 1' x 4"
	BENT/PIER	SOUTH FACE	DELAMINATED AREA	2' W x 1.8' H
		SOUTH FACE	DELAMINATED AREA	1.8' W x 5.5" H
27	DECK	ALL	CRACKING	2% OF DECK, UP TO 1/64" WIDE
	RAIL	LEFT	OK	
		RIGHT	OK	
	SIDEWALK	ALL	DELAMINATED AREA, SPALLS, CRACKS	5% TO 10%, 80% TO 90% SPAN LENGTH
	GIRDER	BEAM 1 LEFT FACE, BENT 27	EXPOSED PRESTRESSED STRANDS	
	BENT/PIER	SOUTH FACE	SPALL	9" W x 6" H x 4" D
28	DECK	ALL	CRACKING	2% OF DECK, UP TO 1/64" WIDE
	RAIL	LEFT	OK	
		RIGHT POSTS 7 AND 8	CRACKING	UP TO 1/8" WIDE
	SIDEWALK	ALL	DELAMINATED AREA, SPALLS, CRACKS	5% TO 10%, 80% TO 90% SPAN LENGTH
	GIRDER	BEAM 2 RIGHT FACE, BENT 28	EXPOSED PRESTRESSED STRANDS	
		BEAM 3 LEFT FACE, BENT 28	EXPOSED PRESTRESSED STRANDS	
	BENT/PIER	ALL	OK	
29	DECK	ALL	CRACKING	2% OF DECK, UP TO 1/64" WIDE
	RAIL	LEFT	OK	
		RIGHT RAIL 2	SPALL W/ EXPOSED CORRODED REBAR	10" L x 4" W x 0.5" D
		RIGHT POSTS 1,3,4,5,6,7	CRACKING	UP TO 1/8" WIDE
	SIDEWALK	ALL	DELAMINATED AREA, SPALLS, CRACKS	5% TO 10%, 80% TO 90% SPAN LENGTH
	GIRDER	ALL	OK	
	BENT/PIER	EAST FACE	DELAMINATED AREA	1.3' W x 1' H
		NORTH FACE	DELAMINATED AREA	3' W x 1.3' H
30	DECK	ALL	CRACKING	2% OF DECK, UP TO 1/64" WIDE
	RAIL	LEFT	OK	
		RIGHT RAIL 2	SPALL W/ EXPOSED CORRODED REBAR	10" L x 4" W x 0.5" D
	SIDEWALK	ALL	DELAMINATED AREA, SPALLS, CRACKS	5% TO 10%, 80% TO 90% SPAN LENGTH
	GIRDER	BEAM 3 LEFT FACE, BENT 31	DELAMINATED AREA	2' x 1' x 4"
	BENT/PIER	SOUTH FACE	DELAMINATED AREA	4' W x 6" H
		BOTTOM	DELAMINATED AREA	5" L x 1.1' W
		BOTTOM	DELAMINATED AREA	3.8' L x 1.9' W
		BOTTOM	SPALL W/ EXPOSED CORRODED REBAR	2' L x 1.3' W x 2" D
31	DECK	ALL	CRACKING	2% OF DECK, UP TO 1/64" WIDE
	RAIL	LEFT	OK	
		RIGHT RAIL 2	SPALL W/ EXPOSED CORRODED REBAR	10" L x 4" W x 0.5" D
	SIDEWALK	ALL	DELAMINATED AREA, SPALLS, CRACKS	5% TO 10%, 80% TO 90% SPAN LENGTH
	GIRDER	BEAM 2 LEFT FACE, BENT 31	DELAMINATED AREA	2' x 1' x 4"
		BEAM 2 RIGHT FACE, ABUT. 32	DELAMINATED AREA	2' x 1' x 4"
		BEAM 3 RIGHT FACE, BENT 31	DELAMINATED AREA	2' x 1' x 4"
	BENT/PIER	ALL	OK	

PILE DEFICIENCIES

PIER	PILE*	LOCATION	DESCRIPTION	SIZE
2	4	SOUTHEAST EDGE	SPALL	1.4' H x 7" W x 1" D
7	6	NORTH FACE	SPALL	7" H x 2" W x 0.5" D
4	1	NORTHWEST EDGE	SPALL	1' H x 4" W x 2" D
12	2	SOUTHEAST EDGE	DELAM. W/ CORROSION	2' H x 8" W
21	1	NORTHWEST EDGE	SPALL	1' H x 6" W x 1" D
26	4	SOUTHWEST EDGE	SPALL	8" H x 4" W x 2" D
22	5	BASE OF JACKET	EXPOSED STEEL TIP	1"

DECK UNDERSIDE

SPAN	LOCATION	DEFICIENCY	SIZE
20	UNDERSIDE	TRANSVERSE CRACKS	UP TO 1/64" W
ALL	THROUGHOUT	SPALLED/DELAMINATED	

* REFER TO PILE NUMBERING SEQUENCE, SECTION A-A SHEET B-15

D.B.T.
FL 45403
1-16-06

BRIDGE NO. 120028

$$$$SYTIMESTAMP$$$$ $$$$DGNSPECIFICATION$$$$

REVISIONS

DATE	BY	DESCRIPTION	DATE	BY	DESCRIPTION

	NAMES	DATES
DRAWN BY	PDM	8/05
CHECKED BY	DBT	8/05
DESIGNED BY	PDM	8/05
CHECKED BY	DBT	8/05
APPROVED BY	D.B. THOMPSON	

ENGINEER OF RECORD.
Kleinger Campo and Associates Corp.
2203 N. LOIS AVE.
SUITE 1200
TAMPA, FLORIDA 33607
Florida Cert. of Authorization No. 02317
David B. Thompson, P.E. No. 45403

LOGO. KCA

LEE COUNTY

DEPARTMENT OF TRANSPORTATION

SHEET TITLE: CONCRETE DEFICIENCY LISTS (3 OF 3)

PROJECT NAME: BIG CARLOS BASCULE BRIDGE REPAIR

SHEET NO. B-11

BX1-22

BX1-23

WORK IDENTIFICATION

1. REPAIR SPALLS IN PEDESTRIAN/TRAFFIC RAILING, CURBS & POSTS.
2. REPAIR SPALLS IN DECK TOP & UNDERSIDE, OVERHANG END & UNDERSIDE, BEAMS, AND DIAPHRAGMS.
3. REPAIR SPALLS IN PILES, BENT CAPS, AND PIERS.

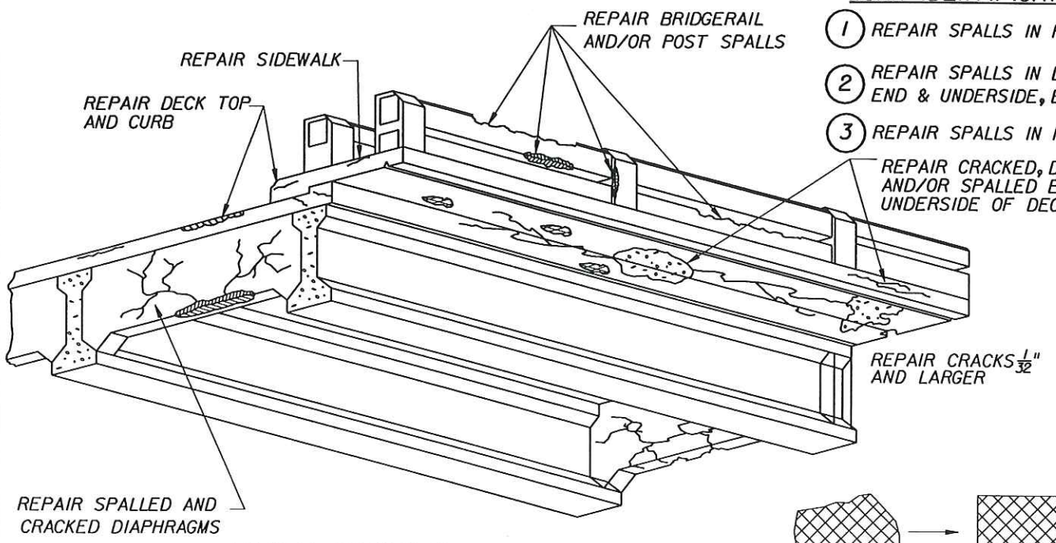

TYPICAL SUPERSTRUCTURE DEFICIENCIES

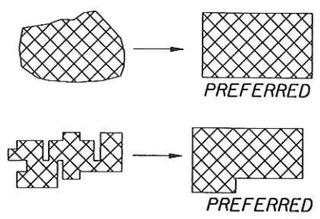

SIMPLE PATCH CONFIGURATION

SAW CUT SO THAT CORNER LOCATIONS HAVE RIGHT ANGLES. PATCH CONFIGURATIONS SHALL BE KEPT AS SIMPLE AS POSSIBLE.

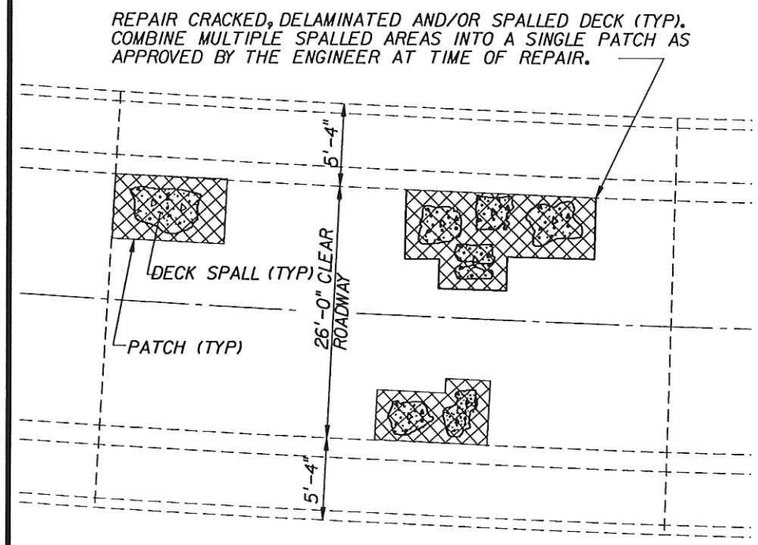

PARTIAL PLAN VIEW

LAP SPLICE TABLE	
REBAR SIZE	LAP SPLICE LENGTH
BARS 4 THRU 6	24 TIMES BAR DIAMETER
7	28 TIMES BAR DIAMETER
8	32 TIMES BAR DIAMETER
9	36 TIMES BAR DIAMETER
10	41 TIMES BAR DIAMETER
11	45 TIMES BAR DIAMETER

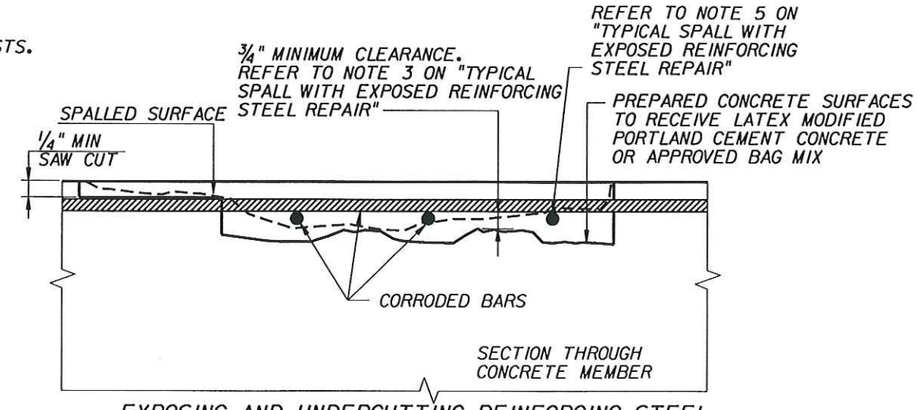

EXPOSING AND UNDERCUTTING REINFORCING STEEL

APPLICABLE TO HORIZONTAL, VERTICAL, AND OVERHEAD LOCATIONS

TYPICAL CRACK REPAIR METHOD

1. PROCEED WITH CRACK REPAIR IF APPROVED BY THE ENGINEER FOR REPAIRS IN OTHERWISE SOUND CONCRETE.
2. REMOVE UNSOUND CONCRETE NEAR THE CRACK.
3. DRILL HOLES FOR EPOXY INJECTION AND FOR AIRVENTING. SEAL EXPOSED CRACK SURFACES IN ACCORDANCE WITH SECTION 411 OF THE STANDARD SPECIFICATIONS.
4. INJECT EPOXY INTO CRACK. WHEN MATERIAL EXTRUDES FROM VENT HOLES, STOP OPERATIONS AND ALLOW FOR CURING.
5. APPLY CLASS II FINISH AT CRACK REPAIR TO REMOVE FINS OR KNOBS. APPLY MATCHING FINISH, TEXTURE AND COLOR AS THE EXISTING FININSH, IN ACCORDANCE WITH THE SPECIFICATIONS.
6. CRACK INJECTION WORK SHALL BE PAID UNDER PAY ITEM NO. 400-135, INJECT AND SEAL CRACKS (PER LINEAR FOOT).

TYPICAL SPALL REPAIR METHOD

1. REMOVE UNSOUND CONCRETE FROM SPALL OR DELAMINATED AREA (NO JACK HAMMERS).
2. PREPARE SURFACE FOR REPAIR MATERIAL IN ACCORDANCE WITH MANUFACTURER'S RECOMMENDATIONS AND THE SPECIFICATIONS.
3. APPLY REPAIR MATERIAL TO SPALL.
4. APPLY MATCHING FINISH, TEXTURE AND COLOR AS THE EXISTING FINISH IN ACCORDANCE WITH THE SPECIFICATIONS.

TYPICAL SPALL WITH EXPOSED REINFORCING STEEL REPAIR

1. REMOVE UNSOUND CONCRETE FROM CRACK/SPALL AREA (NO JACK HAMMERS). SAW CUT THE PERIMETER.
2. REMOVE ANY LOOSE OR DELAMINATED CONCRETE ABOVE CORRODED REINFORCING STEEL. ONCE INITIAL REMOVALS ARE MADE, PROCEED WITH THE UNDERCUTTING OF ALL EXPOSED BARS. UNDERCUT TO PROVIDE CLEARANCE FOR UNDER BAR CLEANING, FULL BAR CIRCUMFERENCE BONDING TO SURROUNDING CONCRETE, AND TO SECURE THE PATCH STRUCTURALLY.
3. PROVIDE MINIMUM 3/4" CLEARANCE BETWEEN EXPOSED REBARS AND SURROUNDING CONCRETE OR 1/4" LARGER THAN LARGEST AGGREGATE IN REPAIR MORTAR, WHICHEVER IS GREATER.
4. CONCRETE REMOVALS SHALL EXTEND ALONG THE BARS TO LOCATIONS ALONG THE BAR FREE OF BOND INHIBITING CORROSION, AND WHERE THE BAR IS WELL BONDED TO SURROUNDING CONCRETE.
5. IF REINFORCING STEEL IS EXPOSED DURING THE UNDERCUTTING PROCESS, CARE SHALL BE TAKEN NOT TO DAMAGE THE BAR'S BOND TO SURROUNDING CONCRETE. IF BOND BETWEEN BAR AND CONCRETE IS BROKEN, UNDERCUTTING OF THE BAR SHALL BE REQUIRED.
6. ANY REINFORCEMENT WHICH IS LOOSE SHALL BE SECURED IN PLACE BY TYING TO OTHER SECURED BARS OR BY OTHER METHODS APPROVED BY THE ENGINEER.
7. CLEAN EXPOSED REBARS BY SANDBLASTING AND REMOVE ANY RUST SCALE, LOOSE CONCRETE, OR ABRASIVES, AND PROPERLY CONTAIN AND DISPOSE OF ALL WASTE.
8. ANY REINFORCING STEEL BAR WITH MORE THAN 25% LOSS OF DIAMETER SHALL BE REINFORCED BY ADDING AN ADDITIONAL REINFORCING STEEL BAR. CONCRETE SHALL BE REMOVED FROM THE EXISTING BAR FOR SUFFICIENT LENGTH TO ALLOW FOR A LAP SPLICE AT EACH END OF THE DETERIORATED SECTION OF BAR. THE MINIMUM LAP SPLICE SHALL BE AS SHOWN IN THE TABLE. THE ADDITIONAL REINFORCING BAR SHALL BE THE SAME SIZE AS THE ORIGINAL BAR.
9. PREPARE SURFACES FOR PATCHING MATERIAL IN ACCORDANCE WITH MANUFACTURER'S RECOMMENDATIONS AND THE SPECIFICATIONS.
10. APPLY REPAIR MATERIAL TO SPALL.
11. THE SURFACE OF THE PATCH SHALL BE FINISHED TO CONFORM TO THE TEXTURE AND COLOR OF THE EXISTING SURFACE. ALLOW ADEQUATE CURING TIME IN ACCORDANCE WITH MANUFACTURER'S RECOMMENDATIONS PRIOR TO APPLICATION OF PAINT OR OTHER COATING.
12. THE WORK DESCRIBED ON THIS SHEET FOR SPALL REPAIRS SHALL BE PAID UNDER PAY ITEM NO. 405-70-2, LATEX MODIFIED PORTLAND CEMENT CONCRETE (PER CUBIC FOOT).

BRIDGE NO. 120028

GENERAL NOTE:

DEFICIENCIES SHOWN ARE FOR ILLUSTRATION ONLY, ALL DIMENSIONS ARE APPROXIMATE. IN THE PRESENCE OF THE ENGINEER, THE CONTRACTOR SHALL CLEARLY OUTLINE ALL AREAS IN NEED OF REPAIR WITH AN APPROVED PAINT OR MARKER PRIOR TO DEMOLITION. NO DEMOLITION OF ANY AREA OR MEMBER OF THE BRIDGE SHALL BE PERFORMED UNTIL THE CONTRACTOR RECEIVES APPROVAL FROM THE ENGINEER.

D.J.T. FL 45403 1-16-06

$$$$$$$$DGNSPECIFICATION$$$$$$$$

$$$$$$$$TIMESTAMP$$$$$$$$

REVISIONS					
DATE	BY	DESCRIPTION	DATE	BY	DESCRIPTION

	NAMES	DATES
DRAWN BY	PDM	8/05
CHECKED BY	DBT	8/05
DESIGNED BY	PDM	8/05
CHECKED BY	DBT	8/05
APPROVED BY	D.B. THOMPSON	

ENGINEER OF RECORD.
Kisinger Campo and Associates Corp.
2203 N. LOIS AVE.
SUITE 1200
TAMPA, FLORIDA 33607
Florida Cert. of Authorization No. 02317
David B. Thompson, P.E. No. 45403

LOGO: KCA

LEE COUNTY

DEPARTMENT OF TRANSPORTATION

SHEET TITLE: CONCRETE REPAIR DETAILS

PROJECT NAME: BIG CARLOS BASCULE BRIDGE REPAIR

SHEET NO. B-12

BX1-23

BX1-24
BX1-24

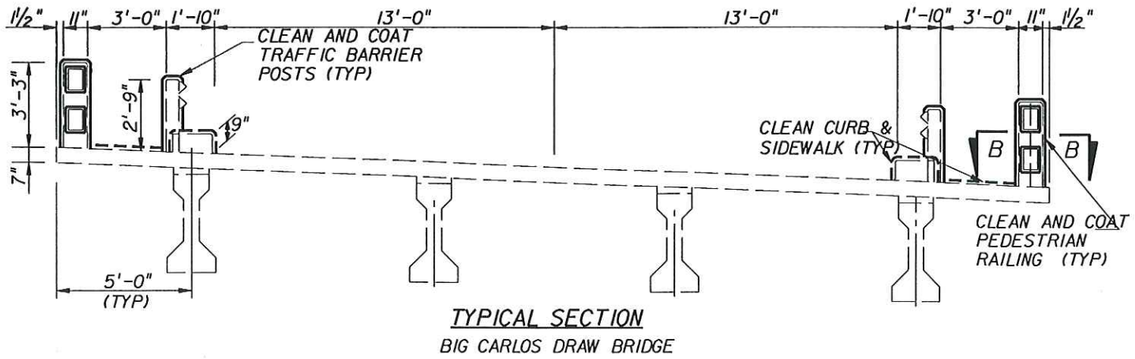

TYPICAL SECTION

BIG CARLOS DRAW BRIDGE

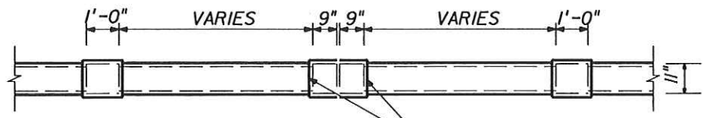

SECTION B-B

CLEAN AND COAT ALL EXPOSED SURFACES OF CONCRETE POST AND BEAM PEDESTRIAN RAILINGS (TYP).

ESTIMATED QUANTITIES (SF)		
DRAW BRIDGE NAME	CLEANING & COATING PAY ITEM 400-143	CLEANING ONLY PAY ITEM 400-145
BIG CARLOS	17720	20340

LEGEND:

——— EXPOSED SURFACE TO BE CLEANED AND COATED

– – – EXPOSED SURFACE TO BE CLEANED ONLY

WORK IDENTIFICATION:

CLEAN (PRESSURIZED WATER) OR CLEAN AND COAT (CLASS 5 APPLIED FINISH COATING) REPAIRED CONCRETE SURFACES AS DETAILED ON THIS SHEET.

NOTES:

1. CLEAN ALL SURFACES INDICATED BY UTILIZING PRESSURIZED POTABLE WATER OF SUFFICIENT PRESSURE TO REMOVE DIRT, OIL, GREASE, SALTS AND OTHER FOREIGN OR LOOSE MATERIAL. ALLOW SURFACES TO COMPLTELY DRY (48 HRS. MIN.). ALL CLEANED SURFACES SHALL BE "BLOWN DOWN" WITH PRESSURIZED AIR (80 TO 100 PSI) PRIOR TO COATING.
2. APPLY A CLASS 5 APPLIED FINISH COATING TO ALL EXPOSED SURFACES AS INDICATED IN CROSS SECTIONS FOR THE FULL LENGTH OF THE BRIDGE. INCLUDE THE FOLLOWING EXPOSED CONCRETE SURFACES:
   TRAFFIC & PEDESTRIAN BARRIERS.
   NOTE: DO NOT COAT CURBS AND SIDEWALKS.
3. PROTECT ALL MARKINGS, BRIDGE NUMBERS, REFLECTORS, WINDOWS, DOORS, OTHER COATINGS AND ALL ATTACHMENTS SUCH AS GUARDRAIL, HANDRAIL, LIGHTS, CONDUIT, SIGNING, ETC. COSTS OF PROTECTION TO BE INCIDENTAL TO THE PAY ITEMS.
4. PAY ITEM 400-143, CLEANING AND COATING OF CONCRETE SURFACES (SF), TO INCLUDE ALL COSTS ASSOCIATED WITH THE PREPARATION, INCLUDING PRESSURE WASHING, AND APPLICATION OF CLASS 5 APPLIED FINISH COATING AS DESCRIBED ON THIS SHEET.
5. PAY ITEM 400-145, CLEANING CONCRETE SURFACES (SF), TO INCLUDE ALL COSTS ASSOCIATED WITH PRESSURE WASHING CONCRETE SURFACES AS DETAILED ON THIS SHEET. THE QUANTITY FOR THIS PAY ITEM IS FOR CONCRETE SURFACES THAT WILL BE CLEANED ONLY.

D.B.T
FL 45403
1-16-06

BRIDGE NO. 120028

$$$$$$$DGNSPECIFICATION$$$$$$$
$$$$$$$SYTIMESTAMP$$$$$$$

REVISIONS

DATE	BY	DESCRIPTION	DATE	BY	DESCRIPTION

	NAMES	DATES
DRAWN BY	PDM	8/05
CHECKED BY	DBT	8/05
DESIGNED BY	PDM	8/05
CHECKED BY	DBT	8/05
APPROVED BY	D.B. THOMPSON	

ENGINEER OF RECORD:
Kisinger Campo and Associates Corp.
2203 N. LOIS AVE.
SUITE 1200
TAMPA, FLORIDA 33607
Florida Cert. of Authorization No. 02317
David B. Thompson, P.E. No. 45403

LOGO:

LEE COUNTY

DEPARTMENT OF TRANSPORTATION

SHEET TITLE: CLEANING AND COATING OF CONCRETE SURFACES

PROJECT NAME: BIG CARLOS BASCULE BRIDGE REPAIR

SHEET NO. B-13

BX1-24
BX1-24

BX1-25
BX1-25

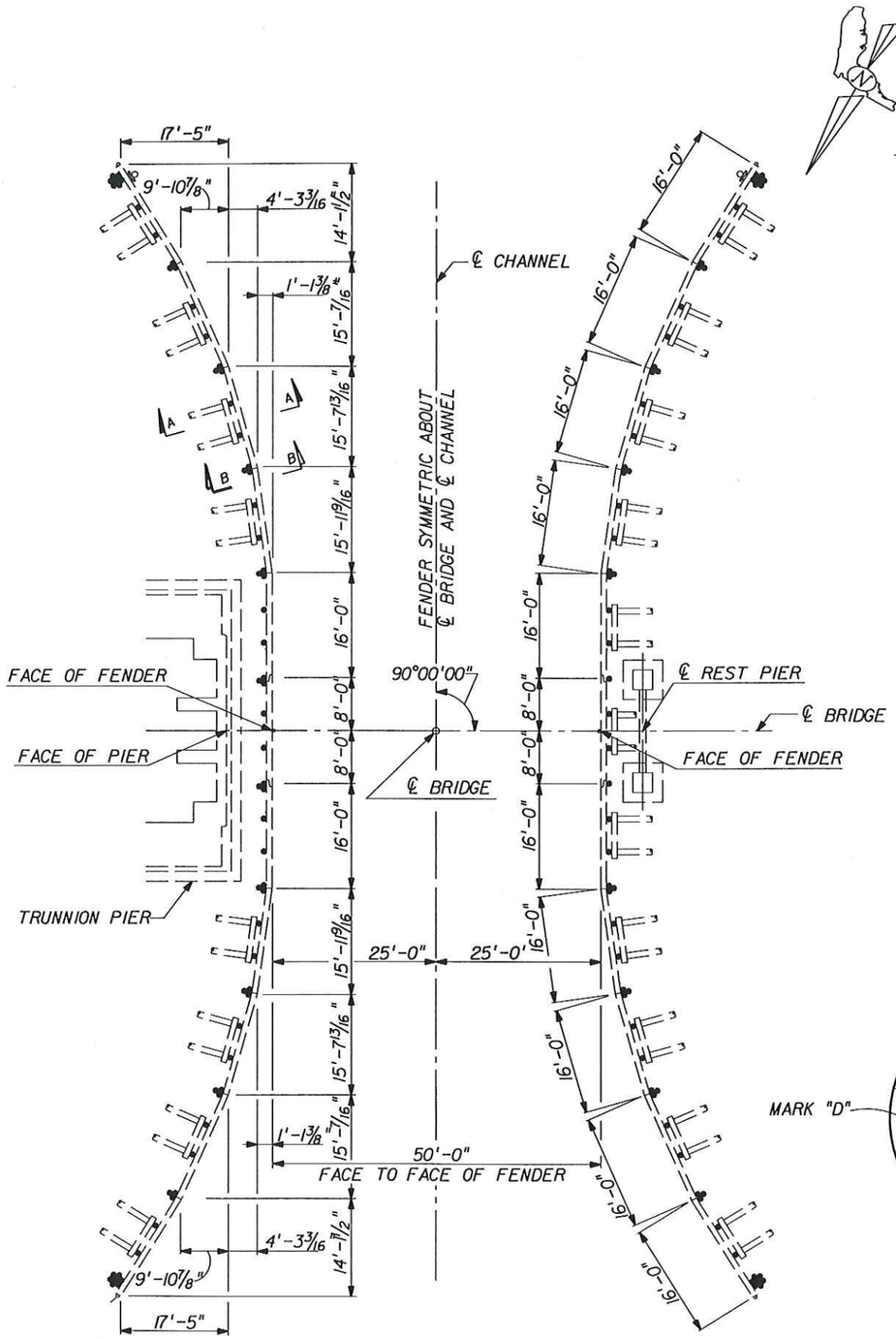

FENDER LAYOUT

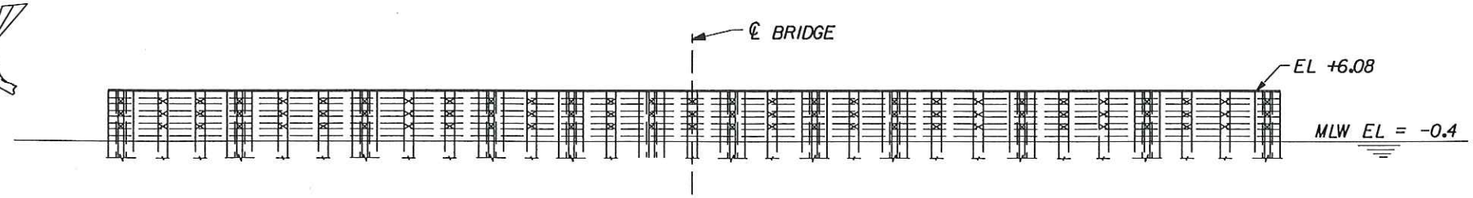

FENDER ELEVATION

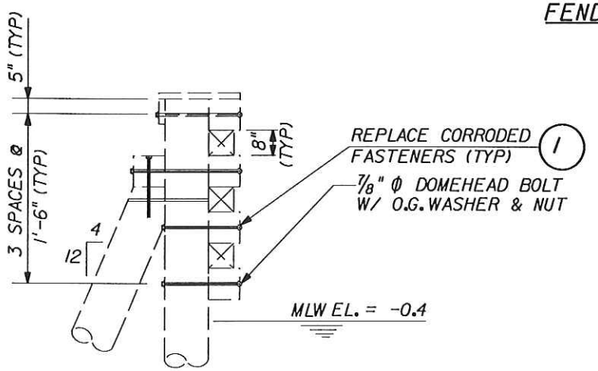

SECTION A-A
(2 PILE CLUSTER)

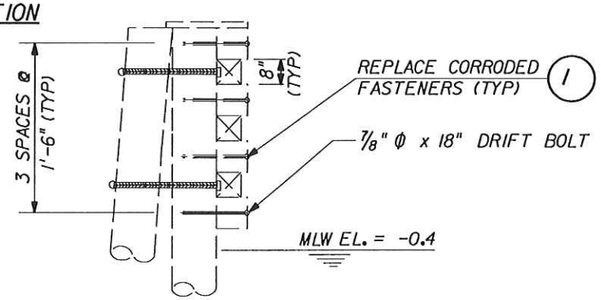

SECTION B-B
(3 PILE CLUSTER)

WORK IDENTIFICATION

(1) REPLACE CORRODED FASTENERS.

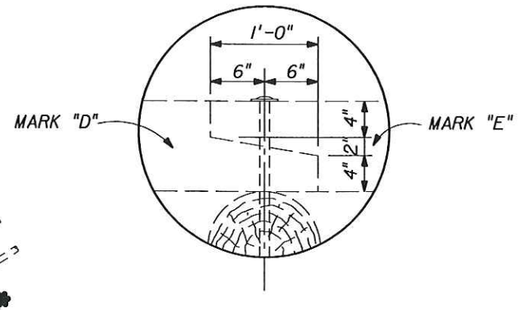

DETAIL OF WALE SPLICE

NOTES:

1. REPLACE CORRODED FASTENERS IN ALL FENDER TIMBER ELEMENTS EXHIBITING 20% OR GREATER SECTION LOSS AS DETERMINED BY THE ENGINEER AT TIME OF REPAIR.
2. PAY ITEM 460-1-13, STRUCTURAL STEEL (FENDER HARDWARE - LBS), TO INCLUDE THE COST OF ALL HARDWARE (NUTS, BOLTS, LAG SCREWS, WASHERS, ETC.), INSTALLATION OF HARDWARE AND ALL COSTS ASSOCIATED WITH REMOVAL OF EXISTING CORRODED FASTENERS.

D.B.T.
FL 45403
1-16-06

BRIDGE NO. 120028

$$$$$$$$SYTIMEENTRIES$$$$$$$$

BX1-26

WORK IDENTIFICATION:

REPAIR CONCRETE SPALLS ON EXISTING PILE JACKETS AS DETAILED ON THIS SHEET.

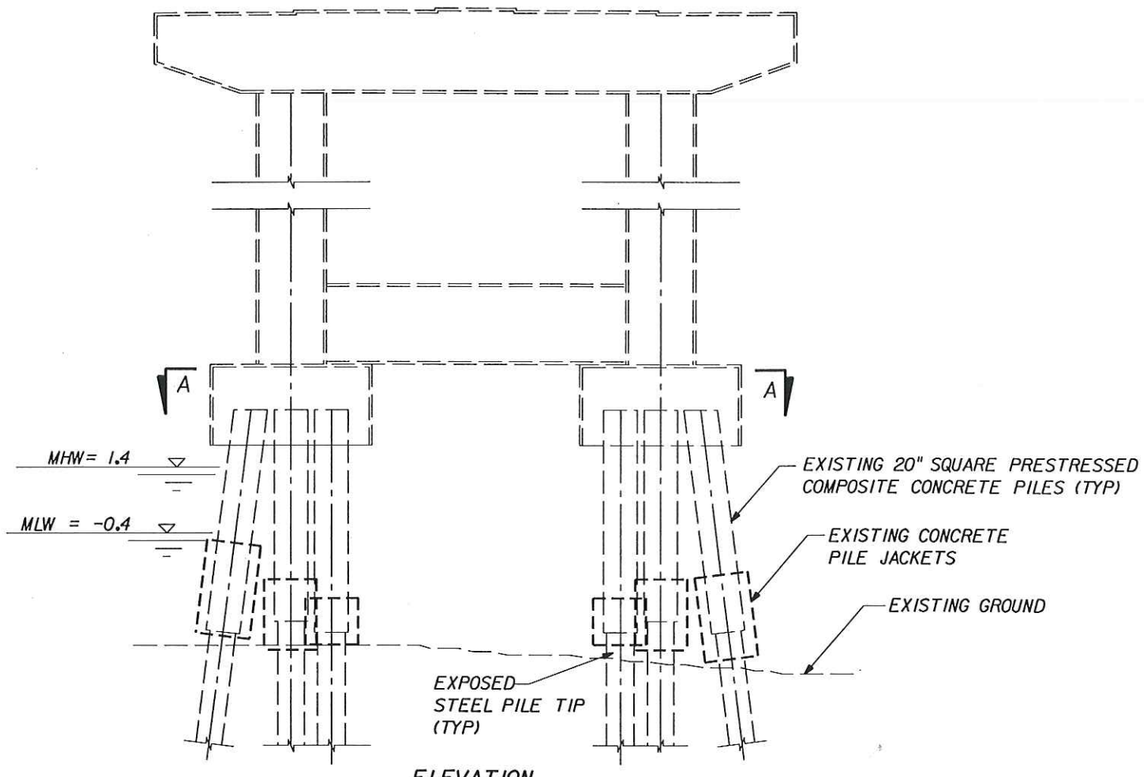

ELEVATION

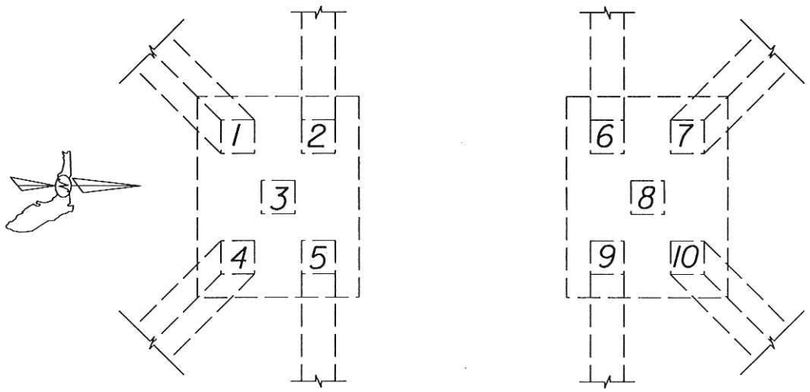

SECTION A-A
PILE NUMBERING SEQUENCE

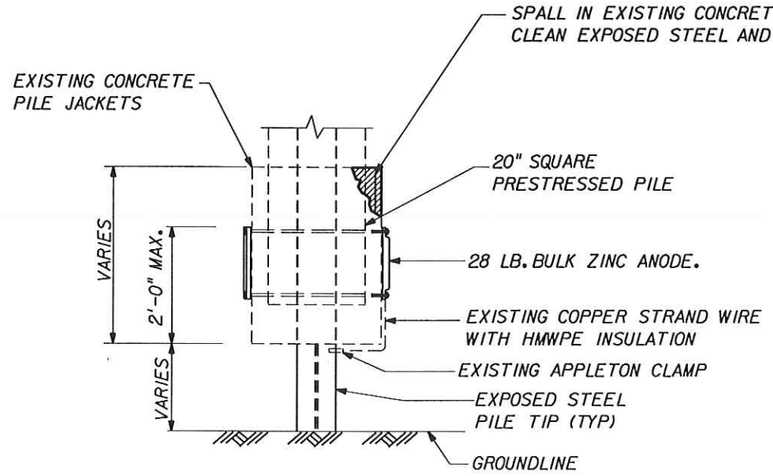

TYPICAL REPAIR TO EXISTING CONCRETE PILE JACKETS

SPALL REPAIR

1. REPAIR SPALLED AND DELAMINATED AREAS IN ACCORDANCE WITH SHEET B-12, CONCRETE REPAIR DETAILS USING REPAIR MATERIAL SUITABLE FOR UNDERWATER REPAIR.
2. SHOP DRAWING SUBMITTAL OF REPAIR MATERIAL TO BE PROVIDED TO THE ENGINEER FOR APPROVAL.
3. CLEAN AND INSPECT EXISTING ZINC ASSEMBLY AND CONNECTION.
4. REPLACE IN-KIND EXISTING ZINC ASSEMBLIES WITH DEFICIENT CONNECTIONS OR ZINC EXCEEDING 25% LOSS.
5. ALL WORK DESCRIBED FOR CLEANING AND REPLACEMENT OF ZINC ASSEMBLIES SHALL BE COMPLETED UNDER PAY ITEM 455-81-301, CATHODIC PROTECTION (INSTALL PILE ZINC ANODE ASSEMBLY) (EA).
6. THE WORK DESCRIBED ON THIS SHEET FOR SPALL REPAIRS UNDERWATER SHALL BE PAID UNDER PAY ITEM NO. 401-70-5, SPALLED AREAS RESTORE (CONTRACTOR'S OPTION) (CF).

PILE JACKET DEFICIENCIES

BENT	PILE*	LOCATION	DESCRIPTION	SIZE
2	3	ALONG LOWER EDGE	DELAMINATED AREA	2.6'x 1' x 1'
21	7	SOUTH QUADRANT	VOID W/ EXPOSED AND CORRODED STEEL	8"x 8" x 6"
22	1	NORTHWEST QUADRANT	VOID W/ EXPOSED AND CORRODED STEEL	2'x 8" x 8"
	8	N FACE AT TOP OF JACKET	WASHOUT	1.5' x 8" x 8"
23	2	SOUTH QUADRANT	VOID	1' x 5" x 6"
	9	EAST FACE	WASHOUT	1.5' x 8" x 8"

BAY BOTTOM JACKETS TYPICALLY EXHIBIT VOIDS UP TO 2" DEEP W/ NO EXPOSURE OF STEEL TIPS

* REFER TO PILE NUMBERING SEQUENCE, SECTION A-A

D.B.T
FL 45403
1-16-06

NOTE THAT PILE DEFICIENCES ARE BASED ON THE FDOT BRIDGE INSPECTION REPORT OF 2/25/2005. CONTRACTOR SHALL NOTIFY THE ENGINEER OF EXISTING PILE CONDITIONS AND OBTAIN ENGINEER'S APPROVAL PRIOR TO PERFORMING ANY REPAIRS.

BRIDGE NO. 120028

$$$$$$$DGNSPECIFICATION$$$$$$$

$$$$$$$SYTIMEBASE$$$$$$$

REVISIONS					
DATE	BY	DESCRIPTION	DATE	BY	DESCRIPTION

	NAMES	DATES
DRAWN BY	PDM	8/05
CHECKED BY	DBT	8/05
DESIGNED BY	PDM	8/05
CHECKED BY	DBT	8/05
APPROVED BY	D.B. THOMPSON	

ENGINEER OF RECORD:
Kisinger Campo and Associates Corp.
2203 N. LOIS AVE.
SUITE 1200
TAMPA, FLORIDA 33607
Florida Cert. of Authorization No. 02317
David B. Thompson, P.E. No. 45403

LOGO:

DEPARTMENT OF TRANSPORTATION

SHEET TITLE: PILE JACKETS REPAIR

PROJECT NAME: BIG CARLOS BASCULE BRIDGE REPAIR

SHEET NO. B-15

BX1-26

BX1-27

EB-1

BIG CARLOS (BR.# 120028)

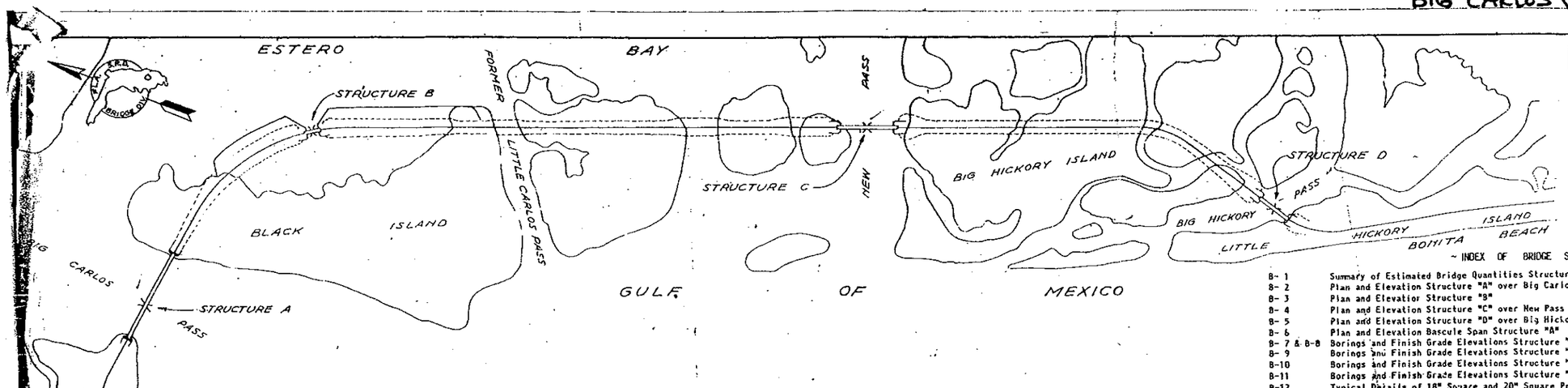

FED. ROAD DIV. No.	STATE	PROJECT No.	FISCAL YEAR	SHEET No.
3	FLA.	12530-3153	'61	B-1

~ INDEX OF BRIDGE SHEETS ~

B- 1 Summary of Estimated Bridge Quantities Structures A, B, C and D.
B- 2 Plan and Elevation Structure "A" over Big Carlos Pass.
B- 3 Plan and Elevation Structure "B"
B- 4 Plan and Elevation Structure "C" over New Pass
B- 5 Plan and Elevation Structure "D" over Big Hickory Pass
B- 6 Plan and Elevation Bascule Span Structure "A"
B- 7 & B-8 Borings and Finish Grade Elevations Structure "A"
B- 9 Borings and Finish Grade Elevations Structure "B"
B-10 Borings and Finish Grade Elevations Structure "C"
B-11 Borings and Finish Grade Elevations Structure "D"
B-12 Typical Details of 18" Square and 20" Square Prestressed Pile, Index 3619.
B-13 Bents 3-W & 16-E Str. "A", 10-N & 10-S Str. "C" and 6-N Str. "D".
B-14 Intermediate Bents for Structures "A", "C" and "D"
B-15 Pier No. 6-W & 3-E for Structure "A"
B-16 Piers 2-W thru 5-W & 2-E for Structure "A"
B-17 Pier 1-W for Structure "A"
B-18 End Bents for Structure "B"
B-19 Intermediate Bents for Structure "B"
B-20 Bents 1-N & 1-S for Structure "C" and 1-N & 1-S for Structure "D"
B-21 Intermediate Bents 2-S thru 5-S Structure "D"
B-22 End Bent No. 6-S for Structure "D"
B-23 48 Ft. Span Superstructure for Structure "A", "C", & "D"
B-24 & B-25 48 Ft. Span Superstructure for Structure "B"
B-26 & B-27 48 Ft. Span Superstructure 4-S and 5-S for Structure "D"
B-28 End Elevations at Bents Nos. 2-S thru 4-S on Structure "D"
B-29 72 Ft. Span Superstructure for Structures "A", "C" & "D"
B-30 Prestressed Beams (Type II-18-10) 48 Ft. Spans for Structures "A", "B", "C" & "D"
B-31 Prestressed Beams (Type III-18-10) for Structures "A", "C" & "D"
B-32 Bearing Shoe Assemblies 72 Ft. Spans Structure "A"
B-33 Concrete Handrail Structures "A" thru "D"
B-34 Guard Rail
B-35 & B-36 Details of Traffic Light and Safety Gate Platforms, Structure "A"
B-37 Structure "A" Steel Flanking Span
B-38 Structure "A" Rest Pier 1-E
B-39 & B-40 Structure "A" Trunnion Pier, General Layout
B-41 & B-42 Structure "A" Trunnion Pier, Reinforcing Details
B-43 Structure "A" Trunnion Pier, Bill of Reinforcing Steel
B-44 Structure "A" Bascule Span, Framing Plan, Girder Geometry and Stress Sheet.
B-45 Structure "A" Bascule Span, Sections and Bracing
B-46 Structure "A" Bascule Span, Main Girder
B-47 Structure "A" Counterweight, General Details
B-48 Structure "A" Bascule Span, Machinery Layout
B-49 Structure "A" Bascule Span, Machinery Supports
B-50 Structure "A" Bascule Span, Trunnion and Related Details
B-51 Structure "A" Lock Assembly and Live Load Shoes
B-52 Structure "A" Buffer Details
B-53 Concrete Control House, Structure "A"
B-54 Elementary Diagram, Structure "A"
B-55 Structure "A" Access Ladders and Platforms
B-56 Structure "A" Details of Fender and Platform
B-57 Fender Details for Structures "B" and "C"
B-58 Fender Details Structure "D"
B-59 Access Ladder Assembly Structure "B"
B-60 Access Ladder Assembly Structure "C"
B-61 Access Ladder Assembly Structure "D"
B-1A Intermediate Bent 3-W for Structure "A"
B-2A Plan and Elevation Proposed Extension Structure "A" over Big Carlos Pass.

SUMMARY OF ESTIMATED BRIDGE QUANTITIES

ITEM NO.	ITEM	UNIT	QUANTITY STRUCTURE A	STRUCTURE B	STRUCTURE C	STRUCTURE D	TOTAL
① 56-1	Excavation for Structures	Cu. Yd.	480	—	—	—	480
300-1A	Class A Concrete (Approach Spans) 2,256	Cu. Yd.	2,083	312	1,126	678	4,199 6,378
300-1B	Class A Concrete (Trunnion Pier & Rest Pier)	Cu. Yd.	841	—	—	—	841 800
300-1C	Class A Concrete (Counterweight)	Cu. Yd.	115	—	—	—	115
300-4	Seal Concrete	Cu. Yd.	459	—	—	—	459
300-8	Concrete Handrail 3,219	Lin. Ft.	2,430	480	1,872	1,104	5,886 4,630
310-1	Reinforcing Steel 517,800	Lb.	482,600	65,500	242,400	144,900	935,400
②320-2A	Structural Steel (Bascule Leaf)	Lump Sum	1	—	—	—	1
③320-2B	Structural Steel (Flanking Spans Ladders & Platforms)	Lump Sum	1	—	—	—	1
④320-2C	Structural Steel (Access Ladders all Fixed Bridges)	Lump Sum	—	—	—	—	1 970,600
⑤320-2D	Structural Steel (Shoe Assemblies)	Lump Sum	1	—	—	—	1
320-4	Machinery and Castings	Lump Sum	1	—	—	—	1
380-1	Treated Structural Timber (12 lb. Treatment) 18.46	M.F.B.M.	14.72	5.78	5.78	5.78	16.00 24.80
401-1A	Prestressed Beams (Type II-18-10) 4,765	Lin. Ft.	3,595	946	3,406	1,892	9,839 10,497
401-1B	Prestressed Beams (Type III-18-10)	Lin. Ft.	2,496	—	356.5	356.5	3,209
403-2	Treated Timber Piling	Lin. Ft.	6,240	3,220	3,220	2760	15,480
403-3	Precast Concrete Piling Furnished (20"□ Prestressed)	Lin. Ft.	—	2,200	6,800	3100	12,100
403-4	Precast Concrete Piling Driven (20"□ Prestressed) 9050	Lin. Ft.	—	2,200	6,800	3100	12,100
403-5	Composite Concrete & Steel Piling Furnished (20"□ Prestressed)	Lin. Ft.	18,000	—	—	—	18,000 4,050
403-6	Composite Concrete & Steel Piling Driven (20"□ Prestressed)	Lin. Ft.	18,000	—	—	—	18,000 9,050
403-7	Steel Piling Furnished (14 BP 73) 9,050	Lin. Ft.	4,400	—	—	—	4,400 350
403-8	Steel Piling Driven (14 BP 73) 350	Lin. Ft.	1,200	—	—	—	1,200 350
403-9A	Unloaded Test Piles (20"□ Prestressed) 350	Lin. Ft.	—	140	360	190	690
403-9B	Unloaded Test Piles (20"□ Prestressed Composite)	Lin. Ft.	440	—	—	—	440
403-9C	Unloaded Test Piles (14 BP 73)	Lin. Ft.	100	—	—	—	100
⑥403-10	Test Loads (110 Tons)	Each	1	1	1	1	4
403-14	Punching	Per Pile Hole	271	—	—	—	271
403-20	Shoes for Timber Piles	Each	156	—	—	—	156
406-1	Shear Connectors	Lb.	973	—	—	—	973
408-1A	Steel Roadway Floor (5" deep)	Sq. Ft.	1,785	—	—	—	1,785
408-1B	Steel Roadway Floor (3" deep, Grooved)	Sq. Ft.	389	—	—	—	389
408-2	Steel Sidewalk Floor (12" deep)	Sq. Ft.	525	—	—	—	525
410-1	Electrical Equipment	Lump Sum	1	—	—	—	1
411-1	Navigation Lights	Lump Sum	—	—	—	1	1
416-1	Control House	Lump Sum	1	—	—	—	1
456-1	Riprap (Sand-Cement)	Cu. Yd.	195	—	—	—	195
465-1	Guardrail (Aluminum) 3,810	Lin. Ft.	2,927	583	1,895	1127	6,467 4,795

NOTE: Payment for incidental items not specifically covered in the individual bid items shall be included in the Contract Prices for bid items.

① Excavation for Structures (Bascule Pier and Rest Pier) See Section 56 of the Specifications.
② Item No. 320-2A includes all Structural Steel in Bascule Leaf and Machinery Supports, approximately 182,000 lbs.
③ Item No. 320-2B includes all Structural Steel not included in Items Nos. 320-2A, 320-2C and 320-2D, approximately 41,900 lbs.
④ Item No. 320-2C includes all Structural Steel in ladders for Structures B, C and D, approximately 2,380 lbs.
⑤ Item No. 320-2D Structural Steel (Shoe Assemblies) Approximately 10,500 lbs.
⑥ The number of Test Loads may be increased or decreased as directed by the Engineer.

~ GENERAL NOTES ~

DESIGN SPECIFICATIONS: A.A.S.H.O., 1961
LOADING: H20-44 (15)
PAINT FOR STRUCTURAL STEEL: All Structural Steel shall be painted in accordance with Article 478 of the Specifications. No paint shall be applied to the surfaces of top flanges of beams that are to be covered with concrete. No paint shall be applied to surfaces within two (2) inches of any field weld until after weld is completed.
BOLTS: Bolts shall be in accordance with A.S.T.M. Specification A-307, except High Strength Bolts.
SURFACE FINISH: In addition to those surfaces specified in Article 300.21 of the Specifications, the following Surfaces shall be given Class 1 Surface Finish, the coping around the top of the Bascule Pier, all exterior Surfaces of the Machinery Room and all exposed Surfaces of the End Bents
STRUCTURAL STEEL: All Structural Steel to be welded shall be in accordance with A.S.T.M. Specification A-36 or A-373.

SUMMARY OF ESTIMATED BRIDGE QUANTITIES STRUCTURES A, B, C AND D

STATE ROAD DEPARTMENT OF FLORIDA
BRIDGE DIVISION

BRIDGES BETWEEN ESTERO ISLAND AND BONITA BEACH

REVISIONS		ROAD NO.	COUNTY	PROJECT NO.
Dates	Descriptions	S-865	LEE	12530-3153
4-7-61	Quantities Rev. Sh. 2 Revised			

	Name	Date
Detailed by	C.E.S.	2-61
Checked by	R.C.B.	1-63
Quantities by	R.C.B.	1-63
Checked by	R.L.T.	1-63
Traced by	C.E.S.	2-61

APPROVED BY T. W. Jernigan
Drawing No. 1 of 60
Sht. No. 1780

BX1-27

BX1-28

BX1-28

EB-2

FED. ROAD DIV. No.	STATE	PROJECT NO.	FISCAL YEAR	SHEET No.
3	FLA	125.30 - 3153	'61	B-2

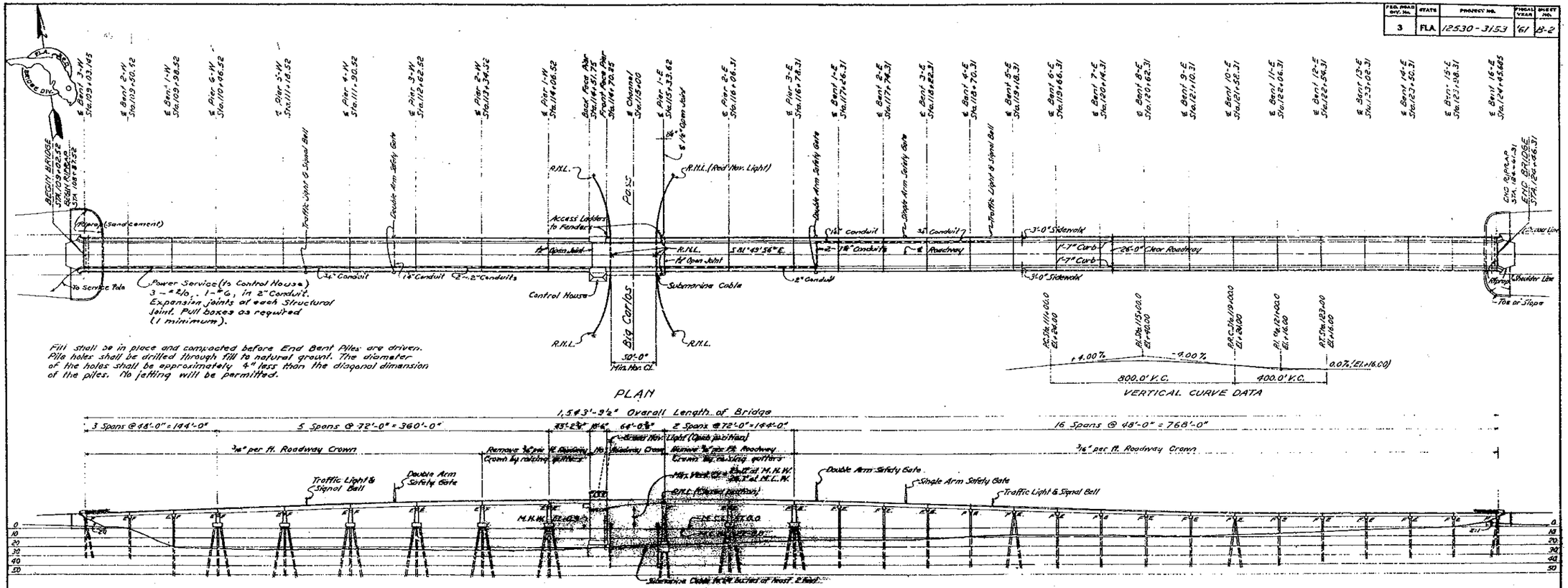

PLAN

1,5@3'-9½" Overall Length of Bridge

ELEVATION

FOR 3-SPAN EXTENSION AT BEGIN BRIDGE SEE SHEET B-2A

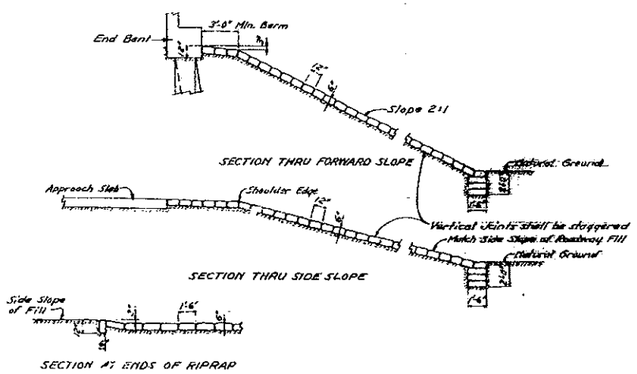

SAND - CEMENT RIPRAP DETAILS

REFERENCE SHEETS

B-1.	Summary of Estimated Bridge Quantities Structures "A" thru "D"
B-2.	Plan and Elevation Structure "A"
B-6	Plan and Elevation Bascule Structure "A"
B-7 & B-8	Bridge and Finish Grade Soundings Structure "A"
B-12	Precast Concrete Piling (20" Prestressed)
B-13	Bents 3-W & 16-E Structure "A" 10-W & 10-S Structure "C" and 6-W Structure "D"
B-14	Intermediate Bents Structures "A", "B", "C" and "D"
B-15	Piers 6-W, 1 & 3-E Structure "A"
B-16	Piers 5-W thru 2-W & 2-E Structure "A"
B-17	Pier 4-W Structure "A"
B-23	48 ft. Span Superstructure Structures "A", "C" and "D"
B-26	72 ft. Span Superstructure Structures "A", "C" and "D"
B-30	Prestressed Beams (Type II-(B-10) Structures "A" thru "D"
B-31	Prestressed Beams (Type III-(B-10) Structures "A", "C" and "D"
B-32	Bascule Span Assembly 72 ft. Span Structure "A"
B-33	Abutments
B-34	Substructure
B-35	General Details for Slabs and Lights and Handrail Spacing 48 ft. Span Structure "A"
B-36	General Details for Slabs and Lights and Handrail Spacing 72 ft. Span Structure "A"
B-37	Steel Railing Posts
B-38	Rigid Pipe Conduit
B-39 & B-40	Typical Pile Arrangement Layout
A-41 & B-42	Typical Expansion Joint Detail Steel
B-43	Typical Pile Shoe and Reinforcing Steel
B-44	Bascule Span Operating Machinery, Girder Geometry and Stress Sheet
B-45	Bascule Span Structural Steel Framing
B-46	Bascule Span Main Girder
B-47	Counterweight - General Details
B-48	Bascule Span Machinery Layout
B-49	Bascule Span Machinery Supports
B-50	Bascule Span Trunnion and Related Details
B-51	Lock Assembly and Live Load Shoes
B-52	Buffer Details
B-53	Concrete Control House
B-54	Bascule Span Wiring Diagram
B-55	Rest Pier Access Ladder and Platform
B-56	Fender Details Structure "A"

PLAN AND ELEVATION
STRUCTURE "A"
OVER BIG CARLOS PASS

STATE ROAD DEPARTMENT OF FLORIDA
BRIDGE DIVISION

BRIDGES BETWEEN ESTERO ISLAND AND BONITA BEACH

REVISIONS		ROAD NO.	COUNTY	PROJECT NO.
Dates	Descriptions	S-865	LEE	A-125-30-3153
1/64	Alter to Reflect Revised Depth Increased Clearance Radii Added			

	Name	Date	APPROVED BY
Detailed by	C.R.S.	1-61	
Checked by	R.C.E.	3-61	
Quantities by			
Checked by			
Traced by	C.E.S.	3-61	

Designed by T.W.S. 2-61
Drawing Checked by T.W.S. 2-61
Checked by C.O. 2-61

BX1-28

BX1-28

BX1-29

BX1-29

EB-3

FED. ROAD DIV. NO.	STATE	PROJECT NO.	FISCAL YEAR	SHEET NO.
3	FLA.		'64	B-2A



Fill shall be in place and compacted before End Bent Piles are driven. Pile holes shall be drilled through fill to natural ground. The diameter of the holes shall be approximately 4" less than the diagonal dimension of the piles. No jetting will be permitted.

PLAN

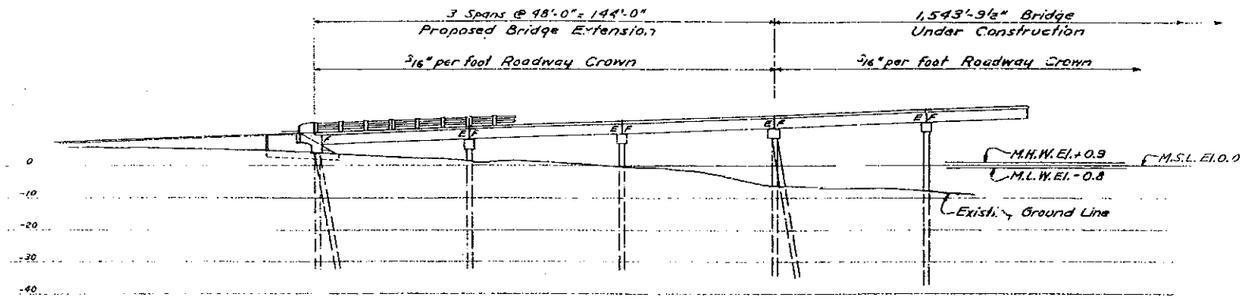

ELEVATION

PLAN AND ELEVATION
PROPOSED EXTENSION
STRUCTURE "A"
OVER BIG CARLOS PASS

STATE ROAD DEPARTMENT OF FLORIDA
BRIDGE DIVISION

BRIDGES BETWEEN ESTERO ISLAND AND BONITA BEACH

REVISIONS Date	Description

ROAD NO.	COUNTY	PROJECT NO.
S-865	LEE	12530-3153

	Name	Date
Detailed by	C.E.S.	1-64
Checked by		
Quantities by		
Checked by		
Traced by	C.E.S.	1-64

APPROVED BY

Assistant State Highway Engineer

Drawing No. 2 of 2

Index No. 8330

BX1-29

BX1-29

BX1-30

EB-4

FED. ROAD DIV. NO.	STATE	PROJECT NO.	FISCAL YEAR	SHEET NO.
3	FLA.	12530-3153	'61	B-6

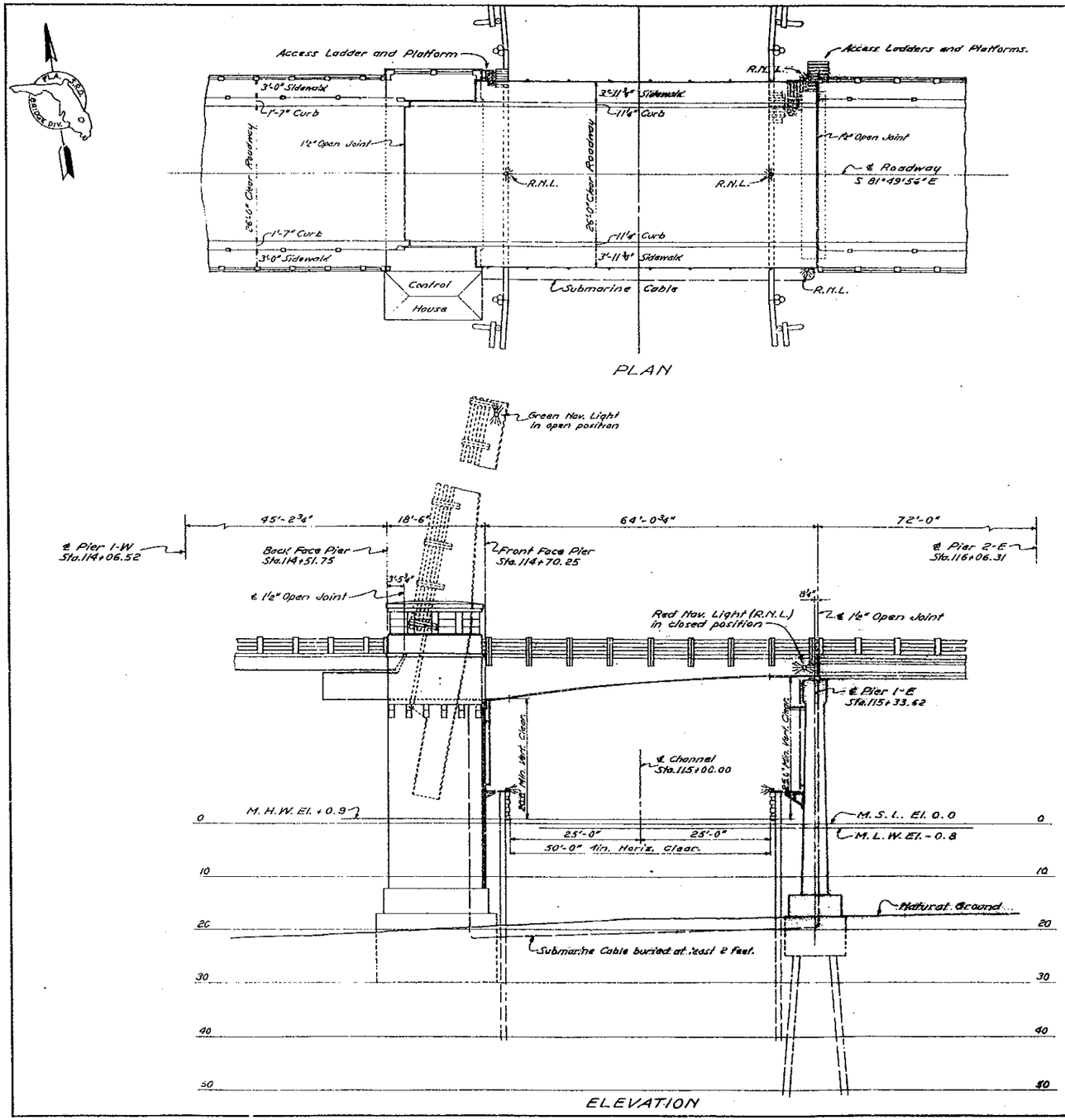

PLAN AND ELEVATION BASCULE SPAN
STRUCTURE "A"

STATE ROAD DEPARTMENT OF FLORIDA
BRIDGE DIVISION

BRIDGES BETWEEN ESTERO ISLAND AND BONITA BEACH

REVISIONS		ROAD NO.	COUNTY		PROJECT NO.
Dates	Descriptions	S-865	LEE		12530-3153
1/64	Piles Removed, Seal depth increased		Names	Dates	APPROVED BY
		Detailed by	C.E.S.	1-61	T.W. Jennings
		Checked by	R.E.N.	4-61	Assistant State Highway Engineer
		Quantities by			
		Checked by			Drawing No. 6 of 60
		Traced by	C.E.S.	1-61	Index No. 7700

BX1-30

BX1-31

BX1-31

EB-5

FED. ROAD DIV. No.	STATE	PROJECT No.	FISCAL YEAR	SHEET No.
3	FLA.	12530-3153	'61	B-7

Note: Finish Grade Elevations are at ℄ Roadway at locations as shown.

℄ Joint Bent 5-W El + 10.341

℄ Joint Bent 4-W El + 12.261

℄ Jt. Bent 3-W El. + 14.181

℄ Jt. Bent 2-W El. + 16.101

℄ Jt. Bent 1-W El. + 18.021

℄ Jt. Pier 6-W El. + 19.941

℄ Jt. Pier 5-W El. + 21.861

℄ Jt. Pier 4-W El. + 24.724

℄ Jt. Pier 3-W El. + 27.211

℄ Jt. Pier 2-W El. + 29.160

℄ Jt. Pier 1-W El. + 30.631

℄ 18" Open Joint El. + 31.563

℄ Jt. Pier 1-E El. + 31.900

℄ 18" Open Joint Pier 1-E El. + 31.941

℄ Jt. Pier 2-E El. + 31.935

℄ Jt. Pier 3-E El. + 31.910

℄ Jt. Bent 1-E El. + 29.939

℄ Jt. Bent 2-E El. + 29.238

M.S.L. El. 0.0

0 10 20 30 40 50 60 70 80 90

109 110 111 112 113 114 115 116 117 118

Fine sand and brown shell

Hard limestone

Very firm, brittle shell limestone with thin layers of hard limestone

Soft lime marl

Fine sand & shell with limestone rock

Very hard, partly crystalized limestone

Fairly hard, brittle, sandy, shelly, limestone

Very firm stiff shell marl

Drive one Unloaded Composite Concrete and Steel Test Pile (20"ø) 50 feet long in the position of a permanent plumb pile in Bent 2-W located as directed by the Engineer.

Fine sand & shell with limestone rock

Hard, partly crystallized limestone

Fairly hard, brittle shell, limestone with thin layers of soft marl

Very firm stiff shell marl

Soft white shell marl

Drive one Unloaded Composite Concrete and Steel Test Pile (20"ø) 35 feet long located as directed by the Engineer.

Fine sand & shell with limestone rock

Very hard limestone

Soft shell marl

Hard limestone

Very firm shell marl with thin layers of hard limestone

Drive one Unloaded Composite Concrete and Steel Test Pile (20"ø) 55 feet long located as directed by the Engineer.

Fine sand & shell

Hard limestone

Soft shell marl

Very hard limestone

Drive one Unloaded 14 BP 73 Steel Test Pile 50 feet long located as directed by the Engineer.

Fine sand & shell

Hard limestone

Firm sandy shell marl

Very firm shell marl

Hard limestone

Fine sand & shell

Hard limestone

Very firm, sandy, shell, marl

Fairly hard, brittle limestone

Very hard limestone

Firm shell marl

Hard, brittle, limestone with thin layers of soft marl

Firm shell marl

Fine sand & shell

Hard limestone

Soft white shell marl

Hard limestone

Very firm

Fairly hard brittle limestone

Firm shell marl

Very hard limestone

Drive one Unloaded Composite Concrete and Steel Test Pile (20"ø) 45 feet long located as directed by the Engineer.

Fine sand & shell

Hard limestone

Fine rapid with traces of mud

Hard limestone

Very firm

Hard limestone

Firm shell marl

Hard shell limestone

Firm shell marl

Note: Numbers at left of Boring Columns are blows per foot* on the Casing. Numbers at right of Boring Columns are blows per foot* on the Spoon.
*unless shown as being in inches.

Note: Borings were made along ℄ of Roadway at locations shown.

TYPE OF RIG ~ SULLIVAN HD-22

	CASING	SPOON
Inside Diameter	2.5"	1.5"
Outside Diameter	2.9"	2.0"
Weight of Hammer	490 Lbs.	140 Lbs.
Average Drop of Hammer	24"	30"

BORINGS AND FINISH GRADE ELEVATIONS STRUCTURE "A"

STATE ROAD DEPARTMENT OF FLORIDA
BRIDGE DIVISION

BRIDGES BETWEEN ESTERO ISLAND AND BONITA BEACH

REVISIONS		ROAD NO.	COUNTY	PROJECT NO.
Date	Description	S-865	LEE	12530-3153
1-64	Three 48' Spans added.			

	Names	Dates
Detailed by	C.E.S.	1-61
Checked by	R.C.B.	2-61
Quantities by		
Checked by		
Traced by	C.E.S.	1-61

APPROVED BY: T. W. Jennings, Assistant State Highway Engineer

Drawing No. 7 of 60 | Index No. 7700

BX1-31

BX1-31

BX1-32

BX1-32

E.B-6

FED. ROAD DIV. NO.	STATE	PROJECT NO.	FISCAL YEAR	SHEET NO.
3	FLA.	12530-3153	'61	B-8

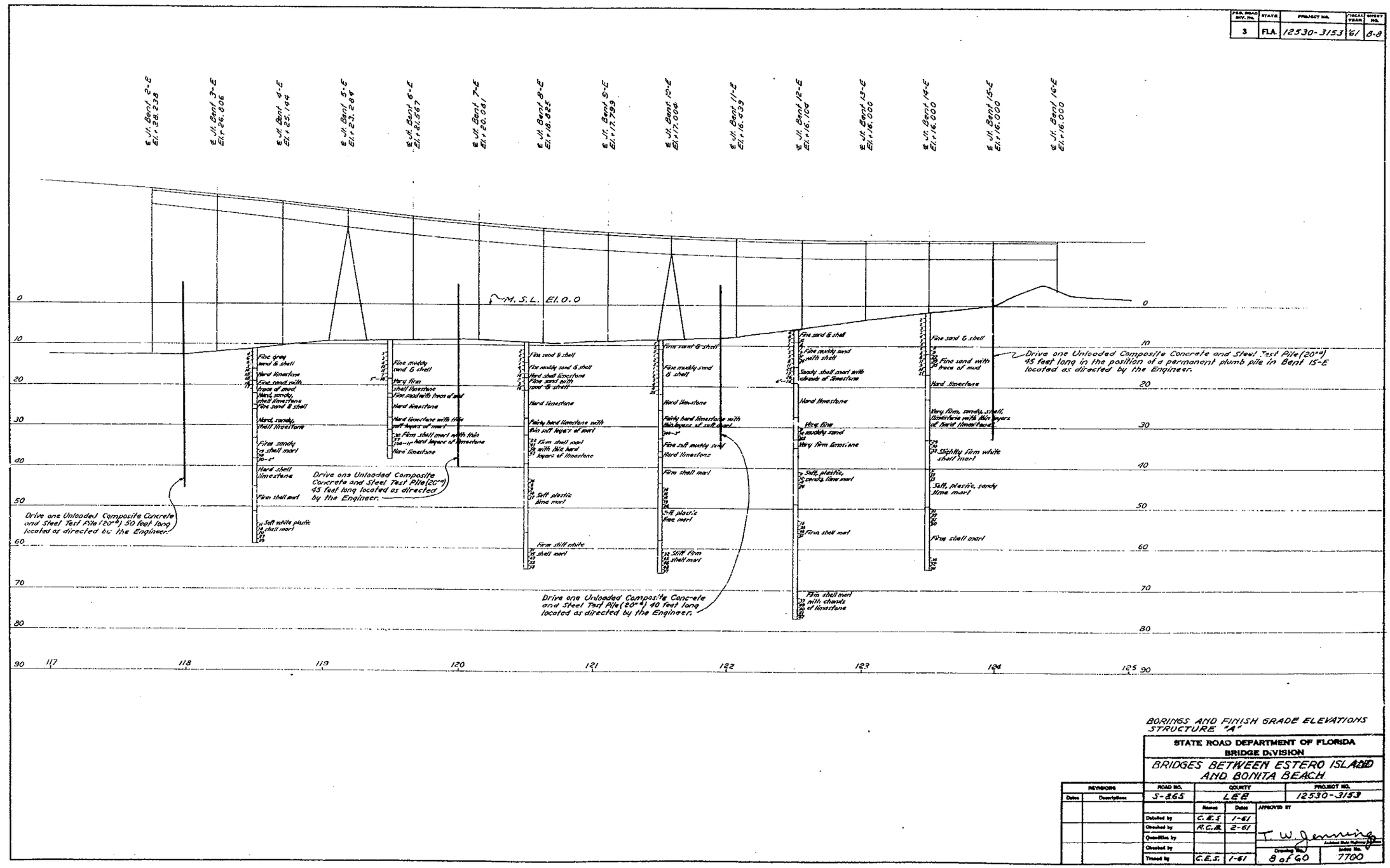

BORINGS AND FINISH GRADE ELEVATIONS
STRUCTURE "A"

STATE ROAD DEPARTMENT OF FLORIDA
BRIDGE DIVISION

BRIDGES BETWEEN ESTERO ISLAND AND BONITA BEACH

REVISIONS		ROAD NO.	COUNTY		PROJECT NO.
Dates	Descriptions	S-865	LEE		12530-3153
			Names	Dates	APPROVED BY
		Detailed by	C.E.S.	1-61	
		Checked by	R.C.B.	2-61	
		Quantities by			T. W. Jennings
		Checked by			Assistant State Highway Engineer
		Traced by	C.E.S.	1-61	Drawing No. 8 of 60 — Index No. 7700

BX1-32

BX1-32

BX1-33

EB-7

FED. ROAD DIV. NO.	STATE	PROJECT NO.	FISCAL YEAR	SHEET NO.
3	FLA.	12530-3153	'63	B-16

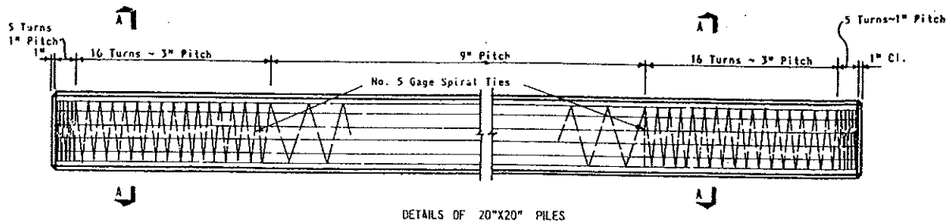

DETAILS OF 20"X20" PILES
Maximum Length~ 75 Ft.~Single Point Pick-up
Maximum Length~107 Ft.~Double Point Pick-up

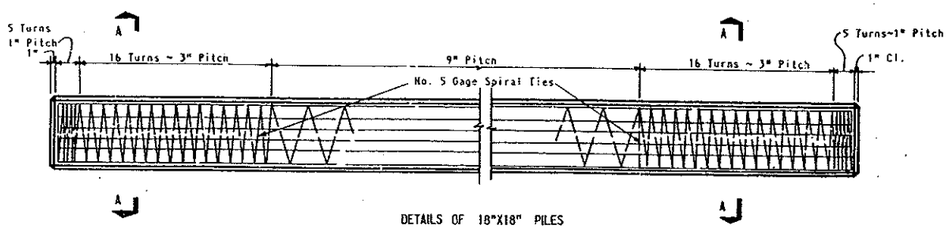

DETAILS OF 18"X18" PILES
Maximum Length~70 Ft.~Single Point Pick-up
Maximum Length~95 Ft.~Double Point Pick-up

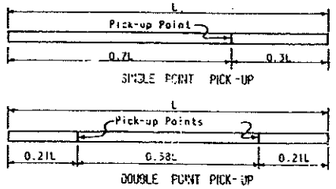

NOTE: Piles shall be marked at Pick-up Points to indicate proper points for attaching handling lines.

DETAILS OF PRESTRESSED CONCRETE PILES

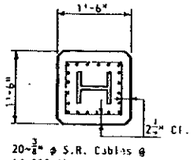

DETAILS OF 18"X18" COMPOSITE PILES

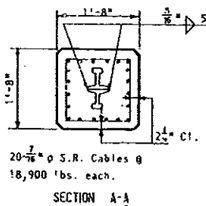

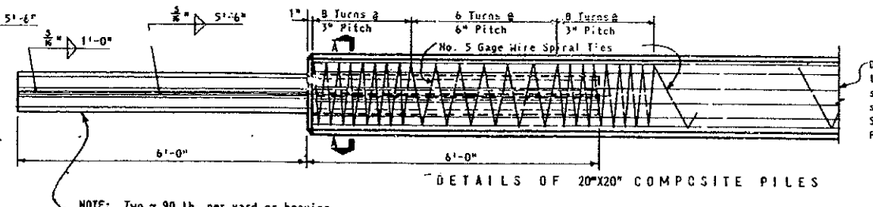

DETAILS OF 20"X20" COMPOSITE PILES

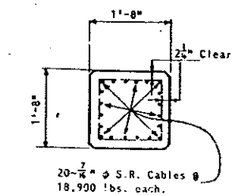

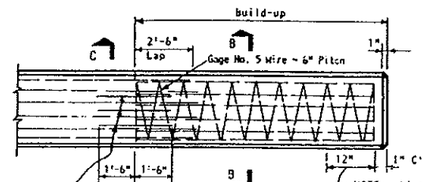

NOTE: If additional driving is required, 2" pitch shall be used for spiral wire within these limits.

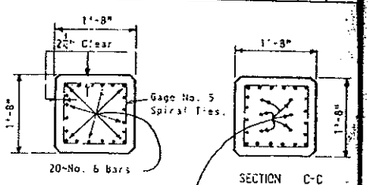

Provide 6-#10 Dowels 3'-0" Long.

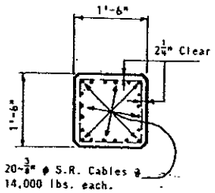

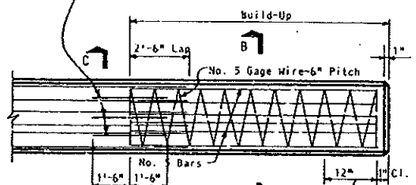

NOTE: If additional driving is required, 2" pitch shall be used for spiral wire within these limits.

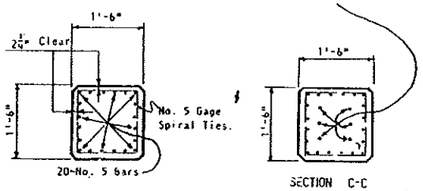

Provide 6-#10 Dowels 3'-0" Long

NOTE: All build-ups shall be made with Class P Concrete.

GENERAL NOTES

SPIRAL TIES: Each wrap of spiral shall be tied to at least two corner Cables.

MATERIAL FOR SPIRAL TIES: Spirals may be manufactured from stock meeting requirements of any grade of reinforcing steel or hard drawn wire.

PILE CUTOFFS: In cutting of Concrete Piles an abrasive saw shall be used to score the Concrete at cut off Elevation to the approximate depth of Reinforcing Steel. As an alternate to sawing, scoring may be done with a templated power drill.

OCTAGONAL PILES: Prestressed Octagonal Piles of equivalent strength may be substituted for square piles. Details of pile shall be submitted to the Engineer for Approval.

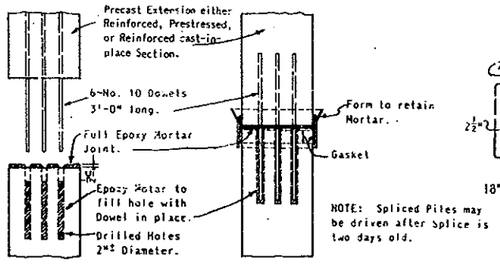

NOTE: Spliced Piles may be driven after splice is two days old.

ALTERNATE EPOXY BONDED SPLICE

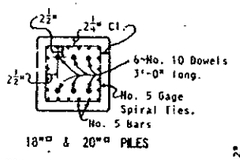

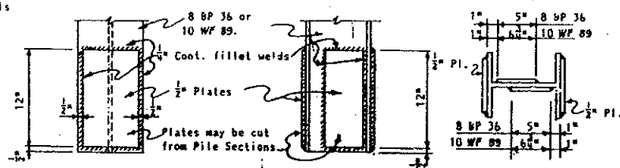

DETAILS OF REINFORCED PILE TIPS

NOTE: Reinforced Pile Tips required only when shown on the Plans or ordered by the Engineer. Each Authorized Reinforced Tip shall be paid for as four additional feet of Composite Concrete and Steel Pile furnished.

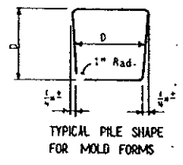

STATE ROAD DEPARTMENT OF FLORIDA
BRIDGE DIVISION

TYPICAL DETAILS OF 18" SQUARE AND 20" SQUARE PRESTRESSED PILES

REVISIONS		ROAD NO.	COUNTY		PROJECT NO.
Date	Description	S-865	LEE		12530-3153
			Names	Dates	APPROVED BY
		Detailed by	C.T.F.	11-61	
		Checked by	J.C.M.	11-61	T.W. Jennings
		Quantities by			Assistant State Highway Engineer
		Checked by			Drawing No. 141 Sht. No. 3615
		Traced by	C.T.F.	11-61	

BX1-33

BX1-34

BX1-34

EB-8

FED. ROAD DIV. No.	STATE	PROJECT NO.	FISCAL YEAR	SHEET NO.
3	FLA.	12530-3153	61	B-13

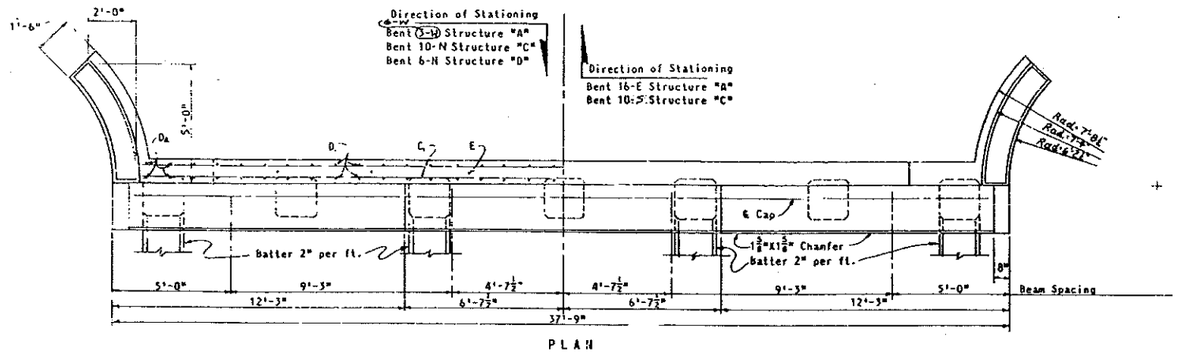

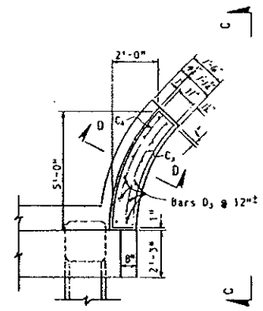

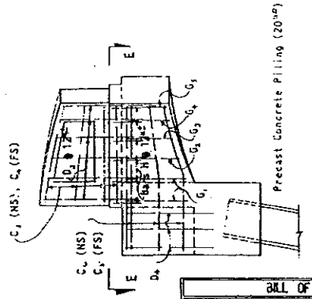

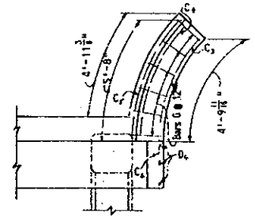

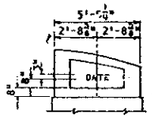

ELEVATION OF HANDRAIL POST
(Showing Date)

The date shall be placed on the South West End Post at Begin Bridge and on the North East End Post at End Bridge on Structures "A". On Structure "C" & "D" the date shall placed on the West End Post at Begin Bridge and the East End Post at End Bridge. The "Date" shall be the year the Bridge is constructed.



SECTION THRU RECESSED "V" TO FORM INSCRIBED LETTERS

NOTE: Black Plastic Letters 3" in height as approved by the Engineer may be used in lieu of the letters formed by V grooves.

BILL OF REINFORCING STEEL			
MARK	SIZE	NO. REQ'D.	LENGTH
A	8	70	37'- 3"
A2	6	2	37'- 3"
C	4	6	37'- 3"
C3	4	8	4'- 7"
C4	4	10	5'- 0"
C5	6	8	7'- 0"
C6	6	8	6'- 7"
D1	4	60	3'- 5"
D2	4	12	3'-11"
D3	4	24	4'- 0"
D4	4	6	3'-10"
E	6	7	1'- 6"
F	4	10	3'- 3"
G1	4	4	8'- 2"
G2	4	2	7'- 8"
G3	4	2	7'- 2"
G4	4	2	6'- 8"
G5	4	2	6'- 4"
H	4	12	2'- 9"
S1	4	34	10'-10"
S2	4	14	8'- 1"

BENDING DIAGRAMS

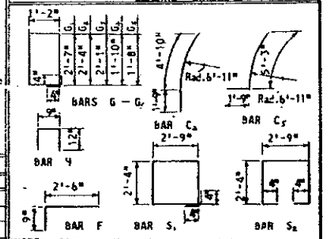

NOTE: All bar dimensions are out-to-out.

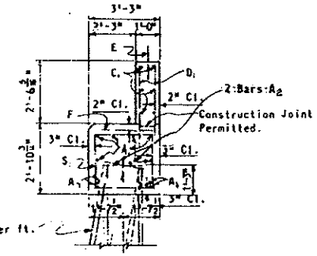

SECTION A-A

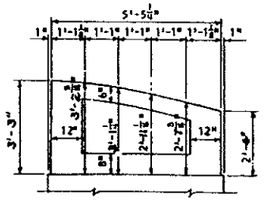

ELEVATION OF HANDRAIL POST
(Showing Dimensions)

NOTE: Quantities for the Handrail Post are included in the Estimated Quantities for the End Bent.

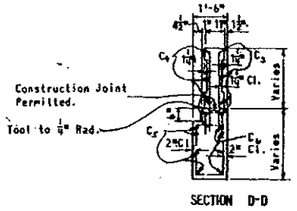

SECTION D-D

ESTIMATED QUANTITIES **		
ITEM	UNIT	QUANTITY
Class A Concrete (Approach Spans)	Cu. Yd.	18.38
Reinforcing Steel	Lb.	2165
Precast Concrete Piling (20"□)	Lin. Ft.	*
Composite Concrete & Steel Piling (20"H)	Lin. Ft.	*

Structures C & D
Structure A

* See Estimated Bridge Quantities.
** Quantities shown are for one bent only.

GENERAL NOTES

DESIGN SPECIFICATIONS: A.A.S.H.O., 1961.
LOADING: H20-44.
DESIGN LOAD FOR PILES: 45 Tons
DOWELS: See Anchor Bolts shown on Superstructure Drawings.

BEARING SURFACES: All bearing surfaces on top of substructure caps for prestressed beams seated on 1" pads shall be finished to a plane parallel to the beam slope

BENTS ℄W & 16-E STRUCTURE "A"
BENTS 10-N & 10-S STRUCTURE "C"
BENTS 6-N STRUCTURE "D"

STATE ROAD DEPARTMENT OF FLORIDA
BRIDGE DIVISION

BRIDGES BETWEEN ESTERO ISLAND AND SONITA BEACH

REVISIONS		ROAD NO.	COUNTY	PROJECT NO.
Date	Description	S-865	LEE	12530-3153
1-64	Add 8" Piles to Str. "D"			

	Name	Date	APPROVED BY
Detailed by	J.J.M.	5-60	
Checked by	R.C.B.	6-60	T. W. Jennings
Quantities by	J.J.M.	5-60	
Checked by	R.C.B.	6-60	Chief Engineer
Traced by	J.J.M.	5-60	Date: 12 of 60 Index No. 7700

13

BX1-34

BX1-35

BX1-35

EB-9

FED. ROAD DIV. NO.	STATE	PROJECT NO.	FISCAL YEAR	SHEET NO.
3	FLA.	12530-3153	61	B-14

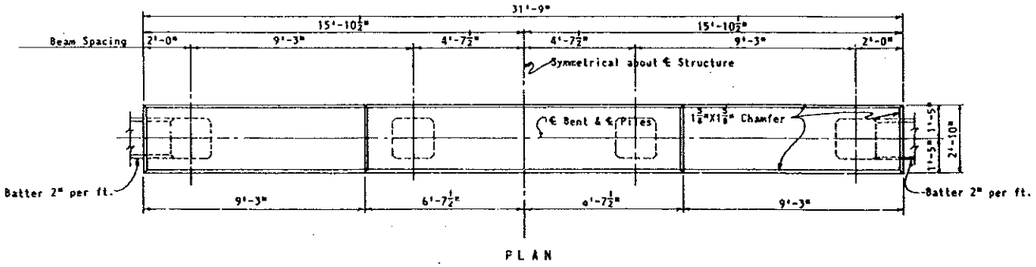

PLAN

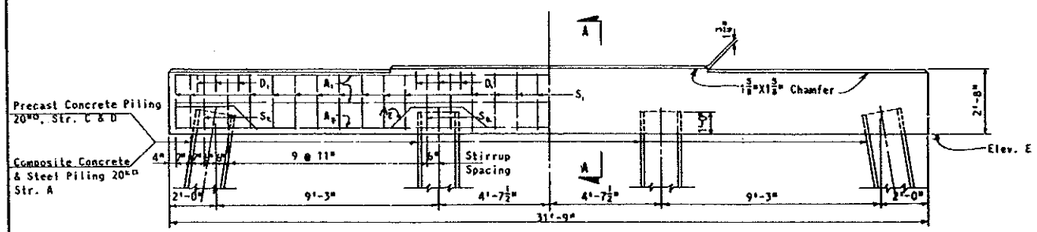

ELEVATION

INTERMEDIATE BENT (TYPE A)

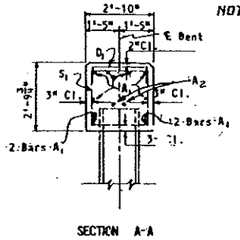

SECTION A-A

TABLE OF ELEVATIONS "E"

STRUCTURE "A"		STRUCTURE "C"		STRUCTURE "D"	
BENT	ELEV. "E"	BENT	ELEV. "E"	BENT	ELEV. "E"
2-W	11.401	9-N & S	30.380	5-N	6.281
1-W	13.321	8-N & S	30.731	4-N	7.760
1-E	22.819	7-N & S	32.519	3-N	8.509
2-E	21.618	6-N & S	26.619	2-N	9.027
3-E	20.186	5-N & S	26.131		
4-E	18.524	4-N & S	27.355		
5-E	16.664	3-N & S	28.291		
6-E	14.947	2-N & S	28.939		
7-E	13.461				
8-E	12.205				
9-E	11.179				
10-E	10.384				
11-E	9.819				
12-E	9.484				
13-E	9.380				
14-E	9.380				
15-E	9.380				
4-W	7.561				
5-W	5.641				

NOTE: Bent 3-W Structure "A" is not included. For Details of Bent 3-W See Sheet No. B-14A.

BILL OF REINFORCING STEEL *

MARK	SIZE	NO. REQUIRED		LENGTH
		TYPE A	TYPE B	
A_1	8	10	—	31'- 3"
A_2	8	2	—	33'-11"
D_1	4	12	—	3'-10"
D_2	4	—	12	4'- 2"
S_1	4	28	—	9'-10"
S_2	4	8	—	7'- 4"
S_3	4	—	34	10'- 6"
S_4	4	—	12	7'- 8"
A_3	10	—	10	33'- 3"
C	6	—	2	33'- 3"

BENDING DIAGRAMS

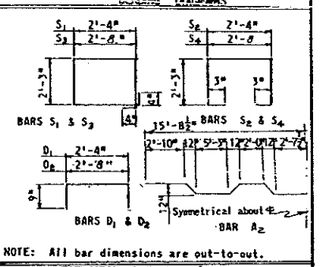

NOTE: All bar dimensions are out-to-out.

ESTIMATED QUANTITIES *

ITEM	UNIT	QUANTITY	
		TYPE A	TYPE B
Class A Concrete (Approach:Spans)	Cu.Yd.	8.68	9.54
Reinforcing Steel	Lb.	1270	1772
Precast Concrete Piling (20"ø)	Lin.Ft.	#	#
Composite Concrete & Steel Piling (20"ø)	Lin.Ft.	#	#

Structure C & D →
Structure A →

See Estimated Bridge Quantities.

* Bill of Reinforcing Steel and Estimated Quantities are for One Bent only.

NOTE: For location of Intermediate Tower Bents, (Type B) See Sheet No. B-2 & B-4.

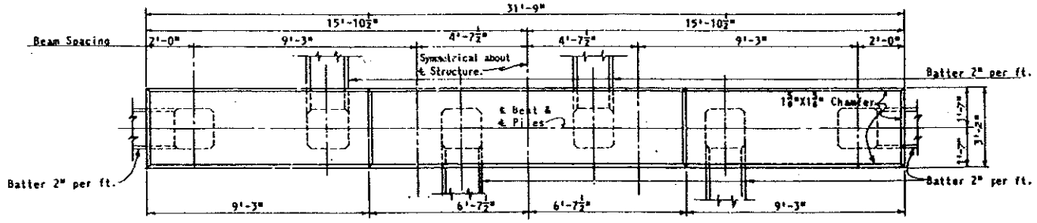

PLAN

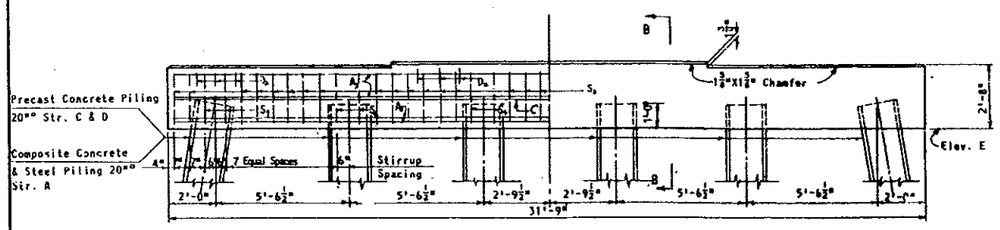

ELEVATION

INTERMEDIATE TOWER BENT (TYPE B)

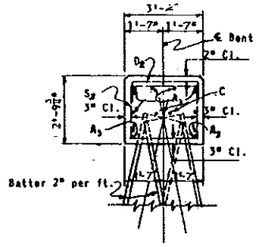

SECTION B-B

GENERAL NOTES

DESIGN LOAD FOR PILES: 55 Tons.
DOWELS AND ANCHOR BOLTS: Set . Anchor Bolts shown on Superstructure Drawings.
BEARING SURFACES: All bearing surfaces on top of substructure caps for Prestressed Beams seated on 1" pads shall be finished to a plane parallel to the beam slope.

INTERMEDIATE BENTS FOR STRUCTURE "A" "C" & "D".

STATE ROAD DEPARTMENT OF FLORIDA
BRIDGE DIVISION

BRIDGES BETWEEN ESTERO ISLAND AND BONITA BEACH

REVISIONS		ROAD NO.	COUNTY		PROJECT NO.
Date	Description	S-865	LEE		12530-3153
1-64	Bents 4-W 15-W Added.		Names	Date	APPROVED BY
		Detailed by	J.J.M.	4-60	
		Checked by	R.C.B.	5-60	
		Quantities by	J.J.M.	5-60	
		Checked by	R.C.B.	5-60	
		Traced by	J.J.M.	4-60	

Drawing No. .13 of 60 | Index No. 7700

14

BX1-35

BX1-35

BX1-36

BX1-36

EB-10

FED. ROAD PROJ. NO.	STATE	PROJECT NO.	FISCAL YEAR	SHEET NO.
3	FLA.		64	B-14A

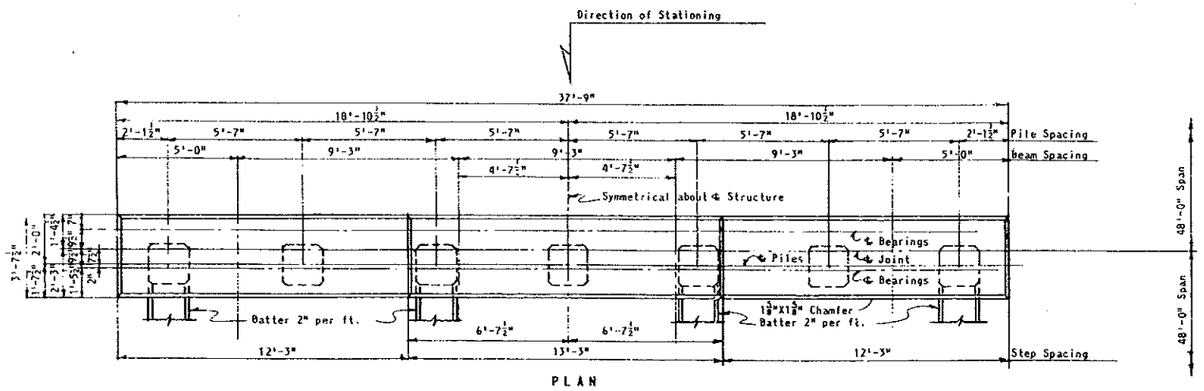

PLAN

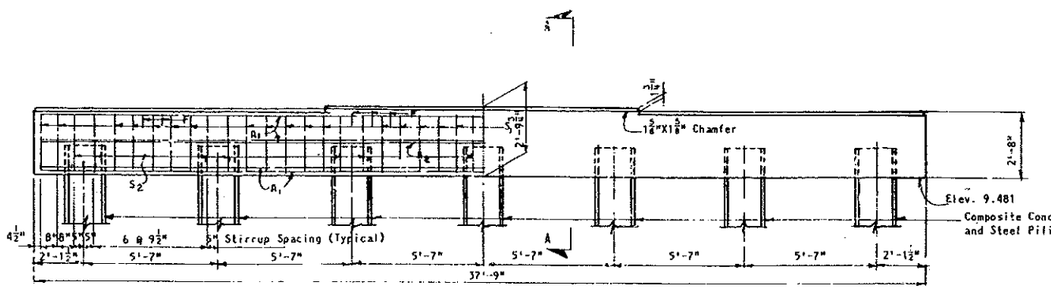

ELEVATION

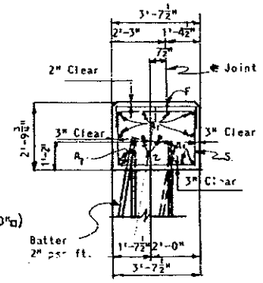

SECTION A-A

BILL OF REINFORCING STEEL			
MARK	SIZE	NO. REQ'D.	LENGTH
A_1	8	10	37'- 3"
A_2	6	2	37'- 3"
F	4	10	3'- 11"
S_1	4	34	11'- 5"
S_2	4	14	8'- 8"

BENDING DIAGRAMS

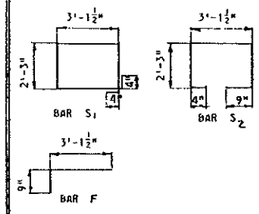

NOTE: All bar dimensions are out-to-out.

ESTIMATED QUANTITIES		
ITEM	UNIT	QUANTITY
Class A Concrete (Approach Spans)	Cu. Yd.	12.93
Reinforcing Steel	Lb.	1473
Precast Concrete and Steel Piling (20"□)	Lin.Ft.	*

* See Estimated Bridge Quantities.

GENERAL NOTES

DESIGN SPECIFICATIONS: A.A.S.H.O., 1961
LOADING: H20-44
DESIGN LOAD FOR PILES: 45 Tons
DOWELS: Set Anchor Bolts shown on Superstructure Drawings.
BEARING SURFACES: All bearing surfaces on top of Substructure Caps for prestressed beams seated on 1" pads shall be finished to a plane parallel to the beam slope.

INTERMEDIATE BENT 3 W FOR STRUCTURE "A"

STATE ROAD DEPARTMENT OF FLORIDA
BRIDGE DIVISION

BRIDGES BETWEEN ESTERO ISLAND AND BONITA BEACH

REVISIONS Date	Description

ROAD NO.	COUNTY	PROJECT NO.
S-865	LEE	12530-3153

	Names	Dates
Detailed by	AGM	1-64
Checked by	R.C.B.	1-64
Quantities by	AGM	1-64
Checked by	R.C.B.	1-64
Traced by	AGM	1-64

APPROVED BY

Assistant State Highway Engineer

Drawing No. 2 of 2

Index No. 8330

BX1-36

BX1-36

BX1-37
BX1-37

EB-11

FED. ROAD DIV. NO.	STATE	PROJECT NO.	FISCAL YEAR	SHEET NO.
3	FLA.	12530-3153	61	B-15

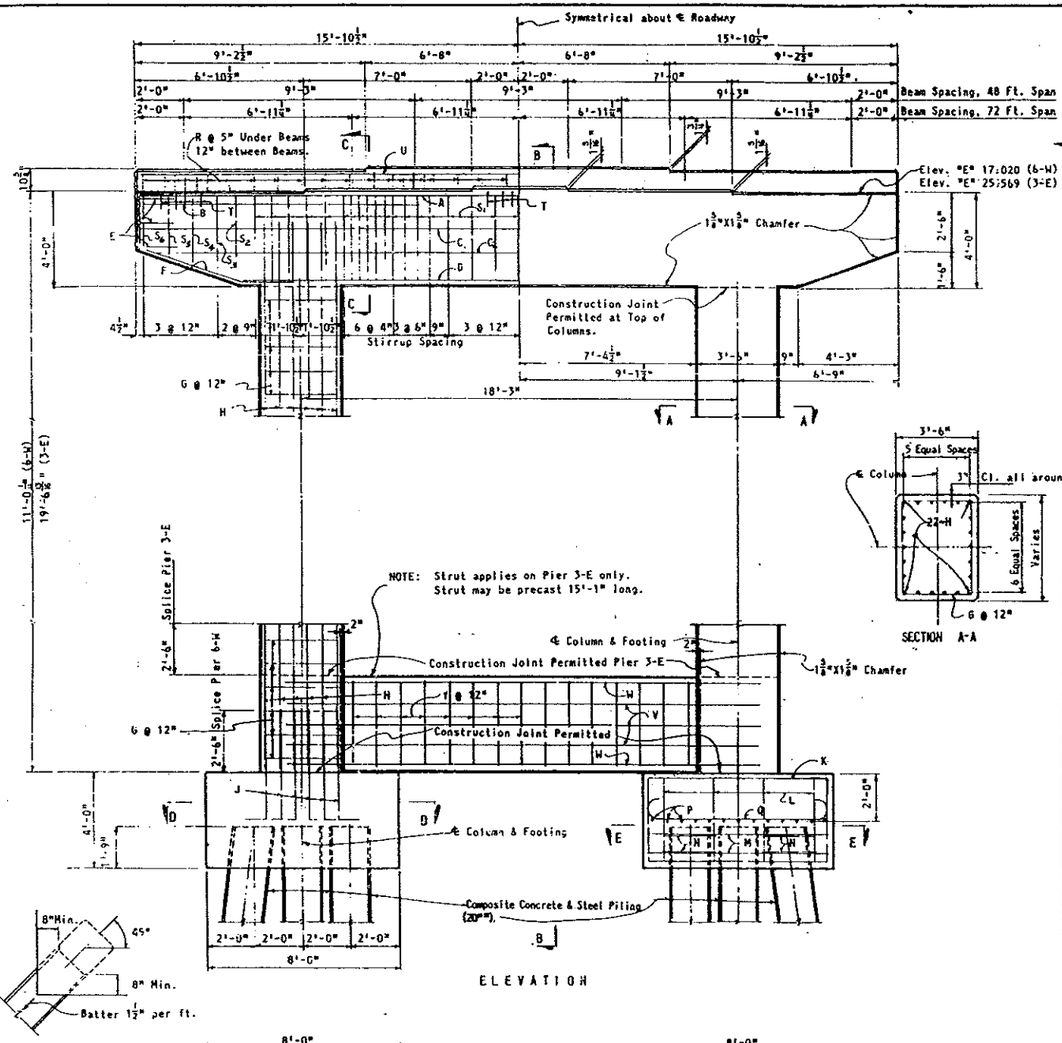

BILL OF CONSTANT REINFORCING STEEL

MARK	SIZE	NO. REQ'D.	LENGTH
A	10	7	31'- 3"
B	10	4	11'- 6"
C_1	8	2	31'- 3"
C_2	8	2	29'- 9"
D	10	7	22'- 9"
E	6	6	5'- 2"
F	6	6	10'- 4"
K	8	8	22'- 8"
L	8	8	27'- 0"
M	6	8	28'- 0"
N	6	8	12'- 4"
P	9	26	11'- 8"
Q	8	30	9'- 8"
R	4	42	4'- 7"
S_1	5	37	13'- 6"
S_2	5	2	13'- 4"
S_3	5	2	12'-10"
S_4	5	2	12'- 0"
S_5	5	2	11'- 3"
S_6	5	2	10'- 7"
T	4	14	3'- 6"
U	5	2	31'- 3"

BENDING DIAGRAMS

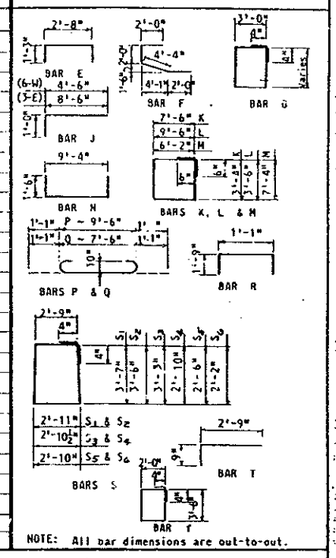

NOTE: All bar dimensions are out-to-out.

BILL OF VARIABLE REINFORCING STEEL

MARK	SIZE	PIER 6-W NO. REQ'D.	PIER 6-W LENGTH	PIER 3-E NO. REQ'D.	PIER 3-E LENGTH
J	8	44	5'-6"	44	9'-6"
G	4	24	Varies	40	Varies
H	8	44	10'-0"	44	14'-6"
V	5			6	20'-0"
W	7			10	20'-0"
Y	4			15	11'-8"

ESTIMATED QUANTITIES

ITEM	UNIT	QUANTITY 6-W	QUANTITY 3-E
Class A Concrete (Approach:Spans)*	Cu.Yd.	45.15	59.12
Reinforcing Steel	Lb.	8540	10,335
Composite Concrete & Steel Piling (20"ø)	Lin.Ft.	*	*

* See Estimated Bridge Quantities.

GENERAL NOTES

DESIGN LOAD FOR PILES: 55 Tons.
BEARING SURFACES: All bearing surfaces on top of Substructure Caps for Prestressed Beams seated on 1" pads shall be finished to a plane parallel to the beam slope.
Bearing surfaces for all other types shall be finished level.
DOWELS AND ANCHOR BOLTS: Set Anchor Bolts shown on Superstructure Drawings.

PIER NO. 6-W & 3-E FOR STRUCTURE "A"

STATE ROAD DEPARTMENT OF FLORIDA
BRIDGE DIVISION

BRIDGES BETWEEN ESTERO ISLAND AND BONITA BEACH

REVISIONS Dates	Descriptions

ROAD NO.	COUNTY	PROJECT NO.
S-385	LEE	12530-3153

	Names	Dates
Detailed by	E.C.B.	5-60
Checked by	NWB	5-61
Quantities by	E.C.B.	5-61
Checked by	NWB	1-61
Traced by		

APPROVED BY: T. W. Jennings
Assistant State Highway Engineer

Drawing No. 14 of 20 | Index No. 7700

15

BX1-37
BX1-37

BX1-38
BX1-38

EB-12

FED. ROAD DIV. No.	STATE	PROJECT No.	FISCAL YEAR	SHEET No.
3	FLA.	12530-3153		8-16

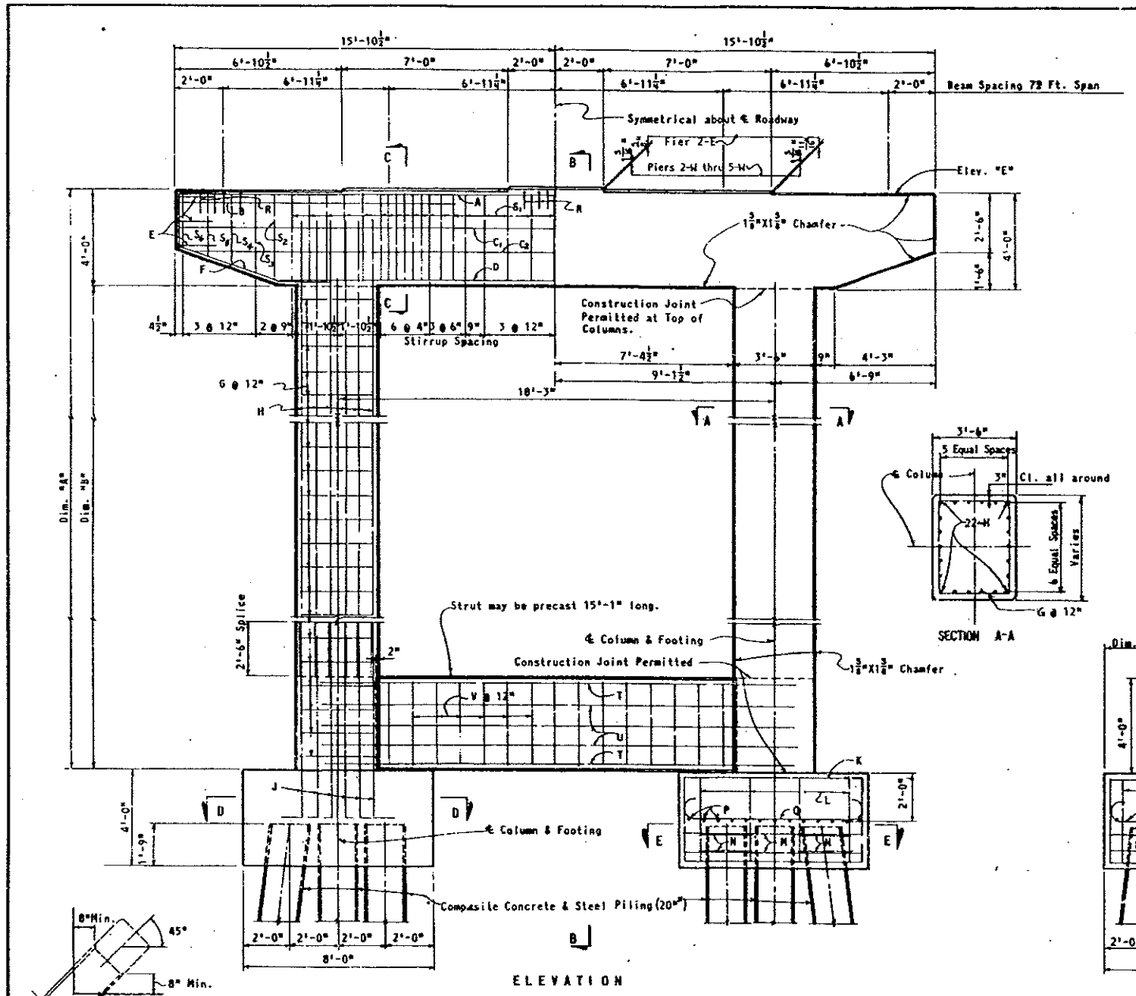

BILL OF CONSTANT REINFORCING STEEL

MARK	SIZE	NO. REQ'D.	LENGTH
A	10	7	31'- 3"
B	10	4	11'- 6"
C_1	8	2	31'- 3"
C_2	8	2	29'- 9"
D	10	7	22'- 9"
E	6	6	5'- 2"
F	6	6	10'- 4"
G	4	See Table	Varies
H	8	44	See Table
J	8	44	9'- 6"
K	8	8	22'- 8"
L	8	8	27'- 0"
M	6	8	28'- 0"
N	6	8	12'- 4"
P	9	26	11'- 8"
Q	8	30	9'- 8"
R	4	14	4'- 3"
S_1	5	37	13'- 6"
S_2	5	2	13'- 4"
S_3	5	2	12'-10"
S_4	5	2	12'- 0"
S_5	5	2	11'- 3"
S_6	5	2	10'- 7"
T	7	10	20'- 0"
U	5	6	20'- 0"
V	4	15	11'- 8"

NOTE: All bar dimensions are out-to-out.

BENDING DIAGRAMS

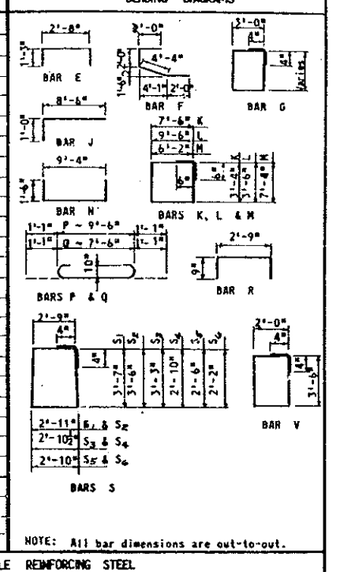

BILL OF VARIABLE REINFORCING STEEL

ITEM	2-W	3-W	4-W	5-W	2-E
G Bars Req'd.	32	30	26	20	34
H Bar Length	14'-10"	13'-4"	11'-5"	8'-10"	15'-9"

BILL OF VARIABLE DIMENSIONS

ITEM	2-W	3-W	4-W	5-W	2-E
Dim. "A"	19'-9⅝"	18'-4⅝"	16'-4⅝"	13'-10⅝"	20'-8⅝"
" "B"	15'-9⅝"	14'-4⅝"	12'-4⅝"	9'-10⅝"	16'-8⅝"
" "C"	4'-0⅝"	4'-0⅝"	3'-11⅝"	3'-10"	4'-1⅝"
" "D"	2'-11⅝"	2'-11⅝"	3'-0⅝"	3'-1"	2'-11⅝"
Elev."E"	25.789	24.339	22.370	19.833	26.707

ESTIMATED QUANTITIES

ITEM	UNIT	QUANTITY 2-W	3-W	4-W	5-W	2-E
Class A Concrete (Approach:Spans)	Cu. Yd.	57.86	58.36	54.33	51.82	58.70
Reinforcing Steel	Lb.	10,118	9,923	9,662	9,385	10,244
Composite Concrete & Steel Piling (20")	Lin. Ft.	*	*	*	*	*

* See Estimated Bridge Quantities.

NOTE: Bill of Reinforcing Steel and Estimated Quantities are for One Pier only.
NOTE: For General Notes see Sheet No. B-15.

PIERS 2-W THRU 5-W & 2-E FOR STRUCTURE "A"

STATE ROAD DEPARTMENT OF FLORIDA
BRIDGE DIVISION

BRIDGES BETWEEN ESTERO ISLAND AND BONITA BEACH

REVISIONS Date	Description

ROAD NO.	COUNTY	PROJECT NO.
S-865	LEE	12530-3153

	Name	Date
Detailed by	R.C.B.	5-60
Checked by	M.E.F.	6-60
Quantities by	R.C.B.	5-60
Checked by	NWB	1-61
Passed by		

APPROVED BY: [signature]
Assistant State Highway Engineer

Drawing No. 15 of 60 | Index No. 7700

BX1-38
BX1-38

BX1-39

EB-13

FED. ROAD DIV. No.	STATE	PROJECT NO.	FISCAL YEAR	SHEET NO.
3	FLA.	12530-3153	61	B-17

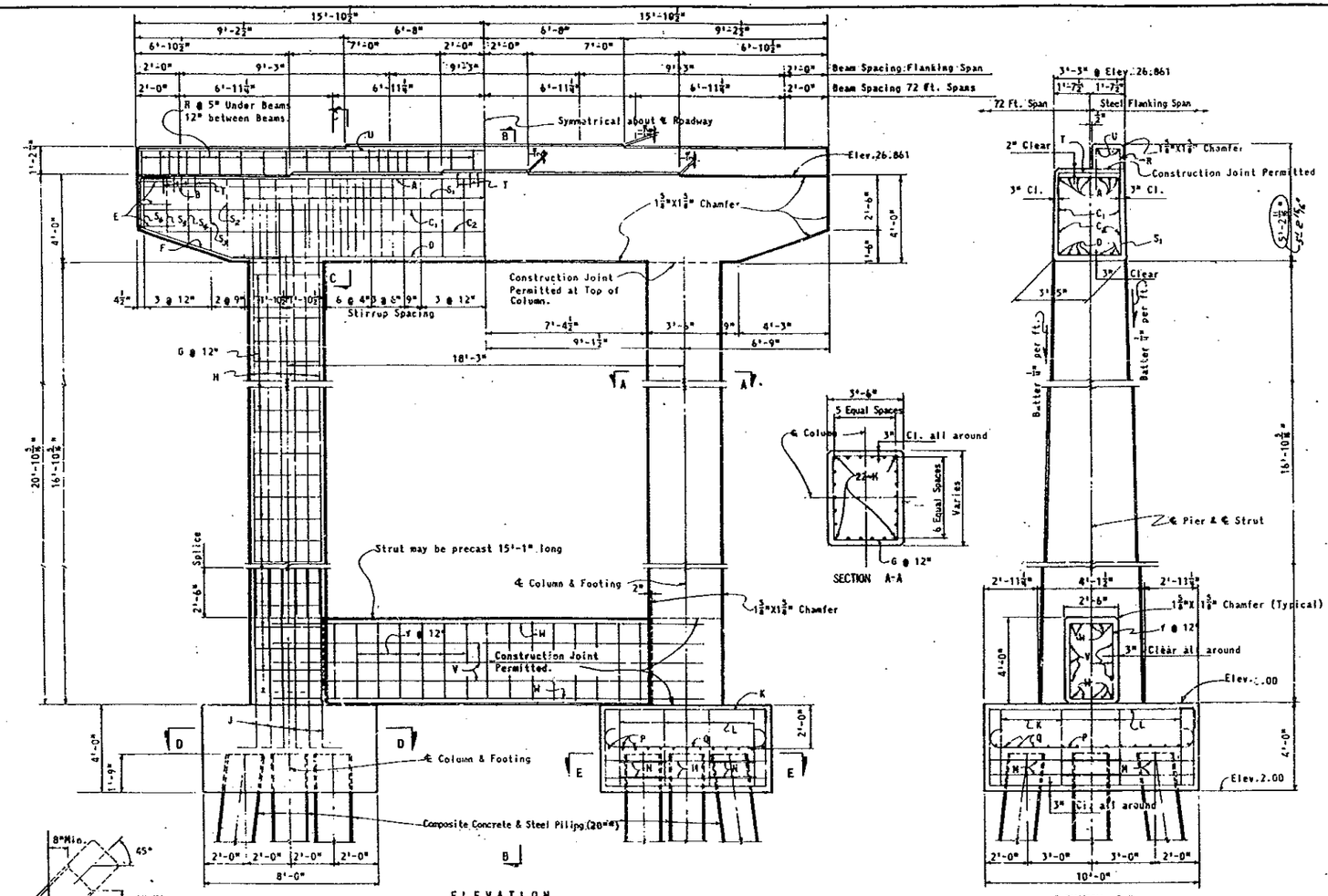

BILL OF REINFORCING STEEL

MARK	SIZE	NO. REQ'D.	LENGTH
A	10	7	31'- 3"
B	10	4	11'- 6"
C_1	8	2	31'- 3"
C_2	8	2	29'- 9"
D	10	7	22'- 9"
E	6	6	5'- 2"
F	6	6	10'- 4"
G	4	34	Varies
H	8	44	16'- 0"
J	8	44	9'- 6"
K	8	8	22'- 8"
L	8	8	27'- 0"
M	6	8	28'- 0"
N	6	8	12'- 4"
P	9	26	11'- 8"
Q	8	30	9'- 8"
R	4	42	5'- 1"
S_1	5	37	13'- 6"
S_2	5	2	13'- 4"
S_3	5	2	12'-10"
S_4	5	2	12'- 0"
S_5	5	2	11'- 3"
S_6	5	2	10'- 7"
T	4	14	3'- 6"
U	5	2	31'- 3"
V	5	6	20'- 0"
W	7	10	20'- 0"
Y	4	15	11'- 8"

BENDING DIAGRAMS

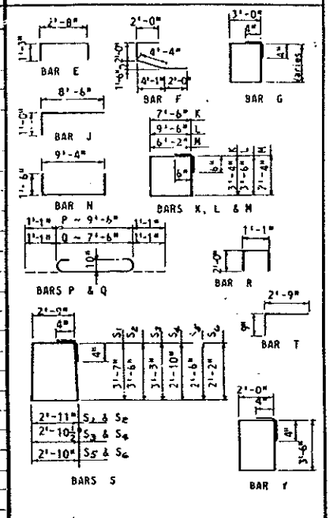

NOTE: All bar dimensions are out-to-out.

ESTIMATED QUANTITIES

ITEM	UNIT	QUANTITY
Class A Concrete (Approach&Spans)	Cu. Yd.	61.10
Reinforcing Steel	Lb.	10,473
Composite Concrete & Steel Piling (20"ø)	Lin. Ft.	*

* See Estimated Bridge Quantities.

NOTE: For General Notes see Sheet No. B-15 .

PIER I-W FOR STRUCTURE "A"

STATE ROAD DEPARTMENT OF FLORIDA
BRIDGE DIVISION

BRIDGES OVER ESTERO ISLAND AND BONITA BEACH

REVISIONS		ROAD NO.	COUNTY		PROJECT NO.
Date	Descriptions	S-865	LEE		12530-3153
1-66	Cap depth revised, elevation B-B.		Name	Date	APPROVED BY
		Detailed by	R.C.B.	5-60	
		Checked by	MEB NHR	5-60 1-61	
		Quantities by	R.C.B.	5-60	
		Checked by	NHR	1-61	
		Traced by		-	

Drawing No. 16 of 60 — Index No. 7700

BX1-39

BX1-40

BX1-40

EB-14

FED. ROAD DIV. No.	STATE	PROJECT NO.	FISCAL YEAR	SHEET NO.
3	FLA.	12530-3153	61	B-23

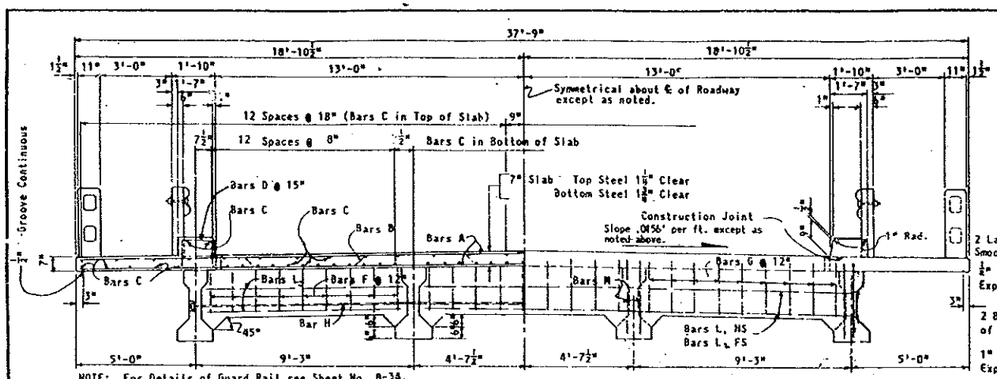

NOTE: All 48 ft. Spans on Structures "A" & "C" and Spans Nos. 1-N thru 5-N on Structure "D" have normal crown on Roadway as shown on this Sheet. On Structure "D" Superstructures transition from normal crown, at Bent No.1-S to Superelevation of .083 per ft. at Bent 6-S. For End Elevation Views at Bents 2-S thru 4-S see Sheet No. B-28 .

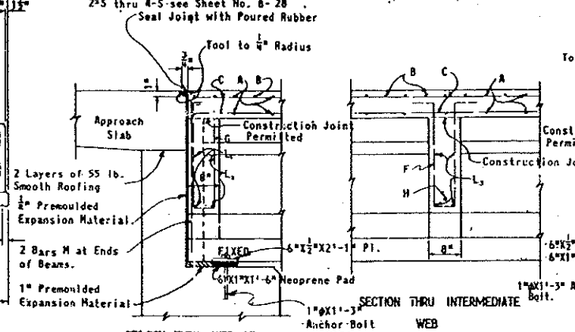

SECTION THRU WEB AT END BENT

SECTION THRU INTERMEDIATE WEB

NOTE: Pour Intermediate Web Walls at least 48 hours before pouring slab.

SECTION THRU END WEB AT INTERMEDIATE BENT

NOTE: Cost of Neoprene Pads shall be included in the Contract Unit Price for Prestressed Beams, Type III.

HALF ROADWAY SECTION

HALF END ELEVATION

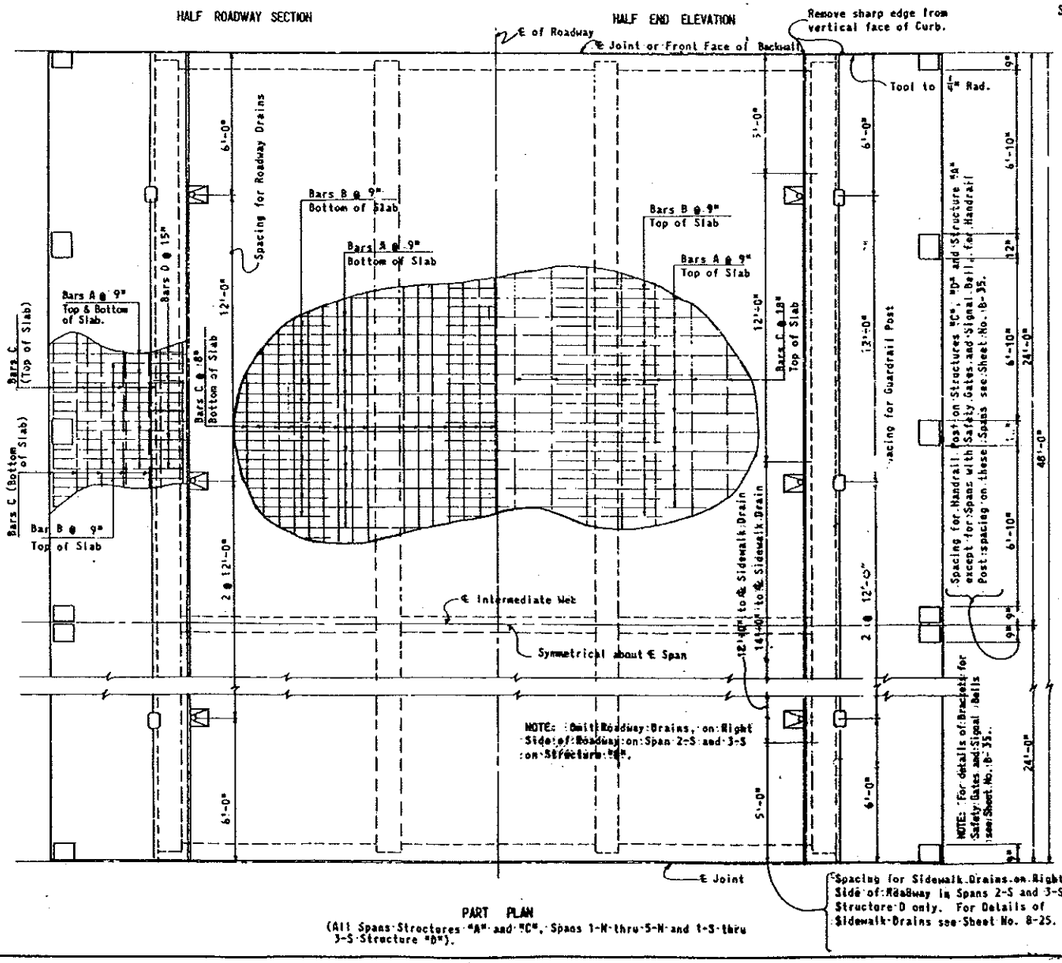

PART PLAN
(All Spans Structures "A" and "C", Spans 1-N thru 5-N and 1-S thru 3-S Structure "D").

NOTE: Slab shall be screeded longitudinally between bulkheads using vibratory screeds.

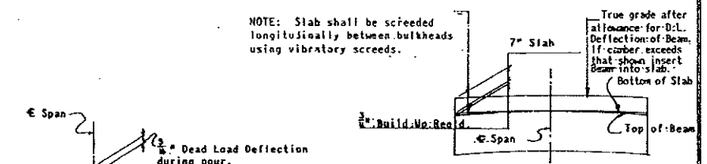

NOTE: Superstructure shall be screeded to grade with no allowance for Permanent Camber.

DEFLECTION DIAGRAM

DETAIL SHOWING RELATIONSHIP OF BEAM & SLAB

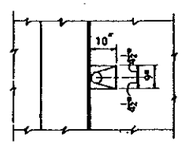

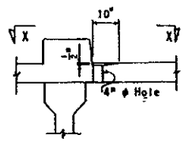

SECTION THRU ROADWAY DRAIN

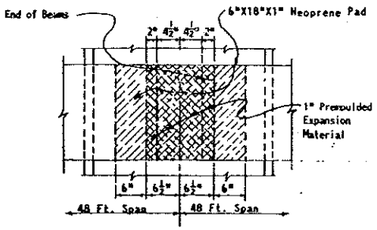

DETAIL OF BEARING
(Showing Location of Neoprene Pads and Premoulded Expansion Material

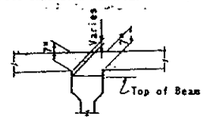

SKETCH SHOWING METHOD OF PROVIDING BUILD-UPS OVER BEAMS

BILL OF REINFORCING STEEL

MARK	SIZE	NO. REQUIRED	LENGTH
A	5	130	37'- 5"
B	5	64	38'- 1"
C	4	79	47'- 7"
D	4	78	3'- 5"
F	4	27	5'- 7"
G	4	54	5'- 7"
H **	1"Ø	1	28'- 4"
L_1	6	4	27'-10"
L_2	6	12	8'- 6"
L_3	4	12	8'- 6"
M	5	16	3'- 2"

BENDING DIAGRAMS

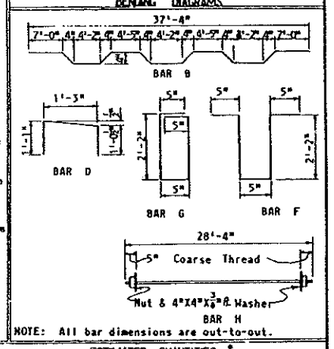

NOTE: All bar dimensions are out-to-out.

ESTIMATED QUANTITIES *

ITEM	UNIT	QUANTITY
Class A Concrete (Approach Spans)	Cu. Yd.	47.50
Reinforcing Steel	Lb.	11,124
Prestressed Beams, Type III (18-10)	Lin.Ft.	189.2

* Concrete and Reinforcing Steel Quantities shown are for Slab, Curbs and Webs only, and do not include Concrete and Reinforcing Steel in Prestressed Beams.

** Smooth round Structural or Intermediate grade rod with Coarse Threads and heavy duty nuts.

NOTE: For General Notes see Sheet No. B-24

NOTE: Provide Conduit in Curb for Electrical Wiring as indicated on Sheets Nos. B-2 and B-5 Structures A & D only. See Wiring Diagram on Sheet No. B-5 for Expansion Joint Requirements.

48 FT. SPAN SUPERSTRUCTURE FOR STRUCTURE "A" "C" & "D"

STATE ROAD DEPARTMENT OF FLORIDA
BRIDGE DIVISION

BRIDGES BETWEEN ESTERO ISLAND AND BONITA BEACH

REVISIONS		ROAD NO.	COUNTY		PROJECT NO.
Dates	Descriptions	S-865	LEE		12530-3153
			Names	Dates	APPROVED BY
		Detailed by	J.J.M.	4-60	
		Checked by	E.C.B.	5-60	
		Quantities by	J.J.M.	4-60	
		Checked by	E.C.B.	5-60	
		Traced by	J.J.M.	4-60	

Assistant State Highway Engineer

Drawing No. 22 of 60 | Index No. 7700

BX1-40

BX1-40

BX1-41

EB-15

FED. ROAD DIV. No.	STATE	PROJECT No.	FISCAL YEAR	SHEET NO.
3	FLA.	12530-3153	61	B-29

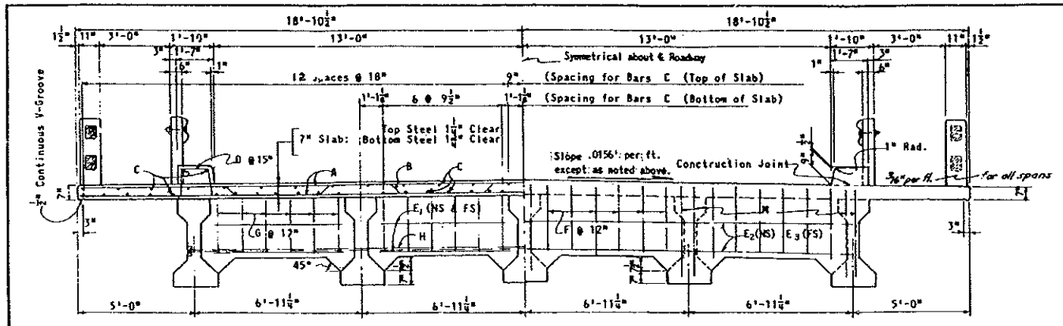

HALF SECTION THRU ROADWAY

HALF END ELEVATION

NOTE: For Details of Guardrail see Sheet No. B-34 and for Details of Handrail see Sheet No. B-33

NOTE: For Structure "A" Slope of Roadway Crown varies from .0156"/' at Pier No.2-W To 0.006"/' at Pier No.1-W. Slope varies from 0.0"/' at Pier No.1-E to .0085"/' at Pier No.2-E and .0156"/' at Pier No.3-E.

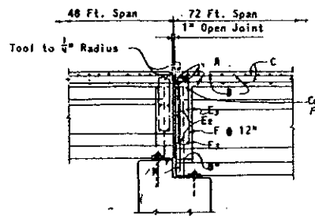

SECTION AT JUNCTION OF 48 FT. SPAN AND 72 FT. SPAN STRUCTURE 'C' & 'D'

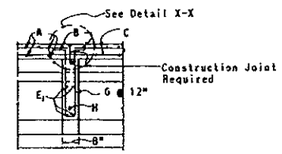

SECTION THRU INTERMEDIATE WEB

NOTE: Pour all Intermediate Web Walls at least 48 hours before pouring slab.

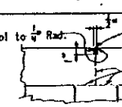

DETAIL X-X

BILL OF REINFORCING STEEL

MARK	SIZE	NO. REQUIRED	LENGTH
A	5	146	37'- 5"
B	5	72	38'- 5"
C	4	68	72'- 7"
D	4	118	3'- 5"
E_1	4	32	6'- 0"
E_2	5	4	28'- 0"
E_3	5	16	6'- 0"
F	4	48	6'- 7"
G	4	48	6'- 7"
H *	1" ø	2	28'- 5"
M	5	20	3'-10"

BENDING DIAGRAMS

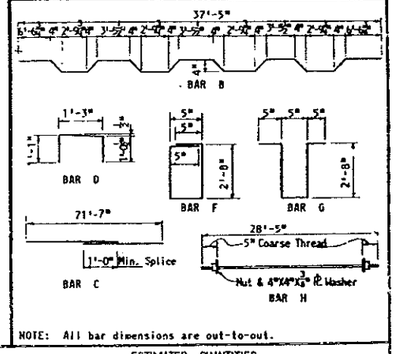

NOTE: All bar dimensions are out-to-out.

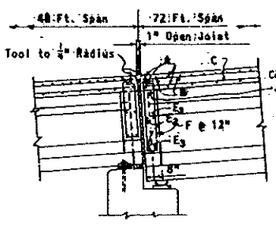

SECTION AT JUNCTION OF 48 FT. SPAN AND 72 FT. SPAN STRUCTURE 'A'

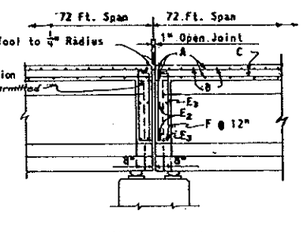

SECTION AT JUNCTION OF 72 FT. SPANS STRUCTURE 'A'

True grade after allowance for D.L. Deflection of Beam. If camber exceeds that shown insert beam into slab.

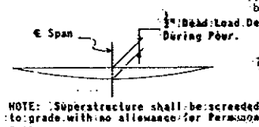

SKETCH SHOWING RELATIONSHIP OF BEAM AND SLAB

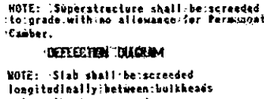

NOTE: Superstructure shall be screeded to grade with no allowance for Permanent Camber.

DEFLECTION DIAGRAM

NOTE: Slab shall be screeded longitudinally between bulkheads using vibratory screeds.

NOTE: Provide Conduit in Curb for Electrical Wiring as indicated on Sheets No. B-2 and B-5 Structures A & D only. See Wiring Diagram Sheet No. B-5 for Expansion Joint Requirements.

NOTE: For Details of Roadway Drains see Sheet No. B-23.

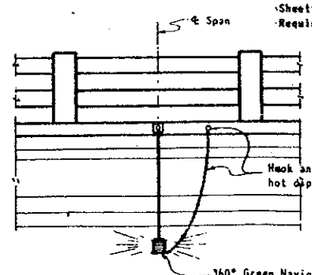

DETAIL OF NAVIGATION LIGHT ON CHANNEL SPAN ON STRUCTURE 'D' ONLY

ESTIMATED QUANTITIES

ITEM	UNIT	QUANTITY
Class A Concrete (Approach Spans)	Cu. Yd.	71.93 **
Reinforcing Steel	Lb.	13,148 **
Prestressed Beams, Type III (18-10)	Lin.Ft.	356.5
Structural Steel (Shoe Assemblies)	Lump Sum	***

* Smooth round structural or intermediate grade rod with coarse threads and heavy duty nuts.

** Concrete and reinforcing steel quantities shown are for slab, webs, and curbs only and do not include concrete and reinforcing steel in prestressed beams.

*** See Estimated Bridge Quantities (Structure "A" only).

GENERAL NOTES

DESIGN SPECIFICATIONS: A.A.S.H.O., 1961.
LOADING: H20-44.

72 FT. SUPERSTRUCTURE FOR STRUCTURE "A" "C" & "D"

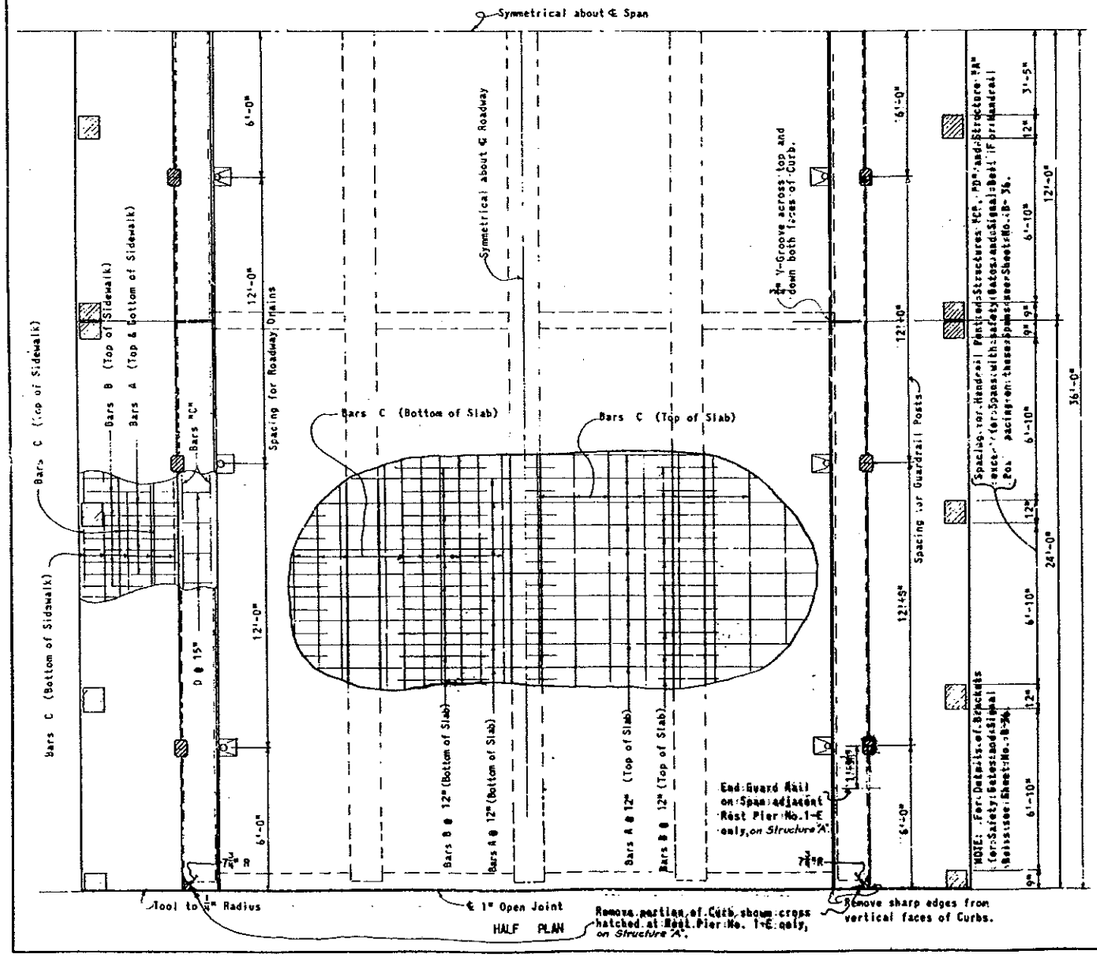

REVISIONS		ROAD NO.	COUNTY		PROJECT NO.
Date	Description	S-865	LEE		12530-3153
1-69	Sidewalk Slope		Name	Date	APPROVED BY
		Detailed by	R.C.B.	4-60	
		Checked by	M.E.F.	4-60	
		Quantities by	R.C.B.	4-60	
		Checked by	M.E.F.	4-60	Drawing No. 28 of 60
		Traced by	R.C.B.	4-60	Index No. 7700

STATE ROAD DEPARTMENT OF FLORIDA
BRIDGE DIVISION

BRIDGES BETWEEN ESTERO ISLAND AND BONITA BEACH

BX1-41

BX1-42

EB-16

FED. ROAD DIV. NO.	STATE	PROJECT NO.	FISCAL YEAR	SHEET NO.
3	FLA.	12530-3153	161	B-30

TABLE OF DIMENSIONS

STRUCTURE	A and C	B				D								
SPAN	All Spans	ALL SPANS				All Spans Except A-S and S-S	A-S				S-S			
BEAM	All Beams	Beam No.1	Beam No.2	Beam No.3	Beam No.4	All Beams	Beam No.1	Beam No.2	Beam No.3	Beam No.4	Beam No.1	Beam No.2	Beam No.3	Beam No.4
DIMENSION a	47'-3½"	47'-6½"	47'-4½"	47'-2½"	47'-0½"	47'-3½"	47'-2½"	47'-2½"	47'-4½"	47'-4½"	46'-8½"	47'-0½"	47'-6½"	47'-10½"
b	23'-7⅜"	23'-9¼"	23'-8¼"	23'-7⅛"	23'-6⅛"	23'-7⅜"	23'-7⅛"	23'-7⅛"	23'-8⅛"	23'-8⅛"	23'-4⅛"	23'-6⅛"	23'-9⅛"	23'-11⅛"
c	18'-7⅞"	18'-9¾"	18'-8¾"	18'-7⅞"	18'-6¾"	18'-7⅞"	18'-7⅞"	18'-7⅞"	18'-8⅞"	18'-8⅞"	18'-4⅝"	18'-6⅝"	18'-9⅝"	18'-11⅝"
d	4⅛"	4⅜"	4⅜"	4⅜"	4⅝"	4⅛"	4⅜"	4⅜"	4⅛"	4⅜"	4⅛"	4⅜"	4⅛"	4⅜"
e	47'-8½"	47'-11½"	47'-9½"	47'-7½"	47'-5½"	47'-8½"	47'-7½"	47'-7½"	47'-9½"	47'-9½"	47'-1½"	47'-5½"	47'-11½"	48'-3½"

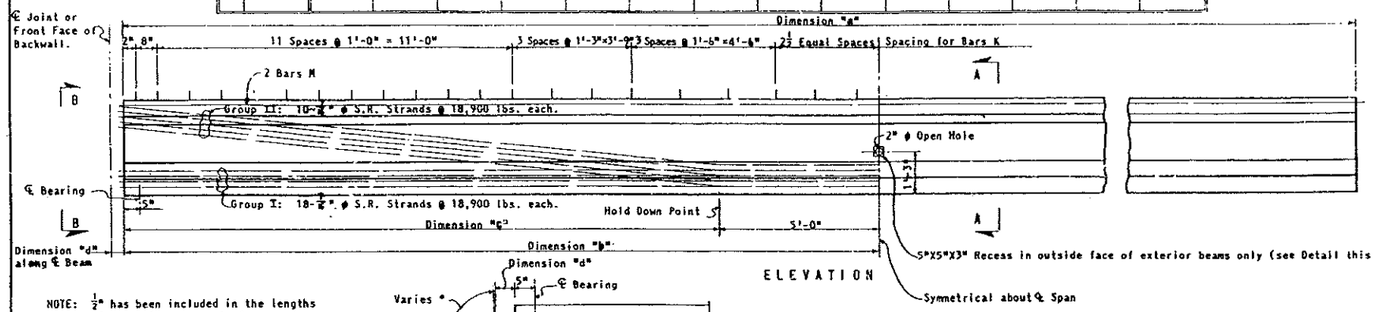

ELEVATION

NOTE: ½" has been included in the lengths of beams to compensate for spans on grade and elastic shortening.

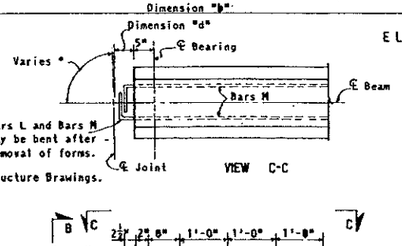

VIEW C-C

NOTE: Bars L and Bars M may be bent after removal of forms.

* See Superstructure Drawings.

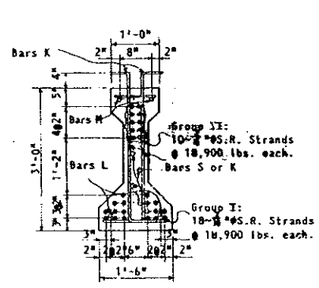

VIEW B-B

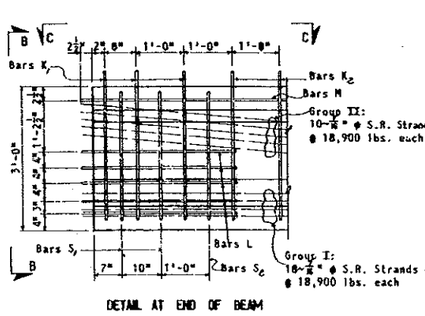

DETAIL AT END OF BEAM

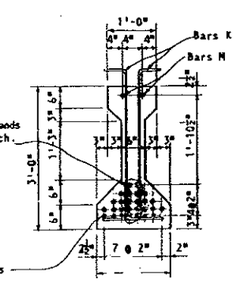

SECTION A-A

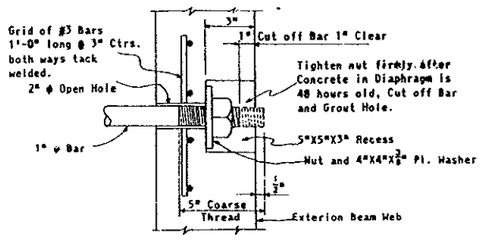

DETAIL OF INTERMEDIATE DIAPHRAGM BAR AT EXTERIOR BEAM

NOTE: Beam Dimensions shown are for Type III Beams but at the Contractor's Option Forms for Type "C" beams may be used.

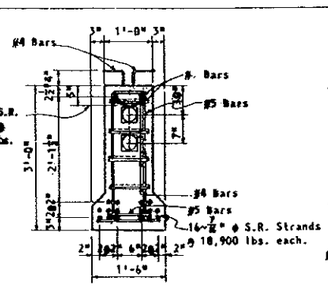

END VIEW

NOTE: Cables shall be tensioned from both ends.

NOTE: Cables shall be draped in parabolic curves.

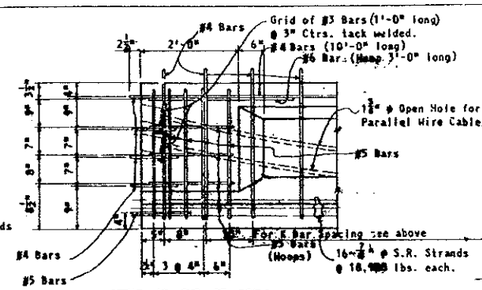

DETAIL AT END OF BEAM

NOTE: Anchorages for Post-tensioned Cables to be set exactly normal to Cables.

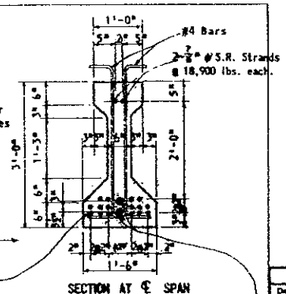

SECTION AT ℄ SPAN

Post-tensioned Cables of 18 wires @ 0.196" dia. Cables shall be stressed to 95,000 lbs. at ℄ Span.

ALTERNATE POST TENSIONED BEAM TYPE II (16-2)

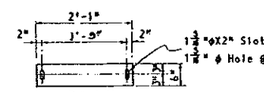

PLAN

NOTE: At the option of the Contractor, two bent bars 1"X⅜"X2'-6" long may be used in lieu of the four end welded studs shown.

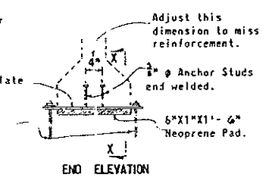

END ELEVATION

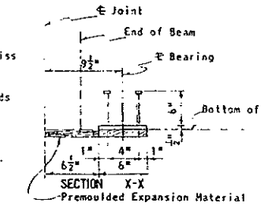

SECTION X-X

NOTE: Anchor Bolts shall be in accordance with A.S.T.M. Specification A-307.

DETAILS OF BEARINGS FOR 48 FT. SPANS

NOTE: Bearing Plates, Anchor Bolts, Nuts and Washers shall be hot dip galvanized in accordance with A.S.T.M. Specifications Designation A-123. The cost of Bearing Plates, Anchor Bolts, Nuts, Washers, Neoprene Pads and Premoulded Expansion Material shall be included in the Contract Unit Price for Prestressed Beams. At the option of the contractor two bent bars 1"X⅜"X1'-9" may be used in lieu of the 4-⅝"ϕX6" Stud Anchors shown.

BILL OF REINFORCING STEEL FOR ONE BEAM

MARK	SIZE	NO. REQ'D.	LENGTH
K$_r$	5	12	4'-4"
K$_s$	4	72	4'-4"
L	4	12	3'-10"
M	5	2	Varies *
S$_y$	5	8	3'-10"
S$_c$	4	4	3'-10"

BENDING DIAGRAMS

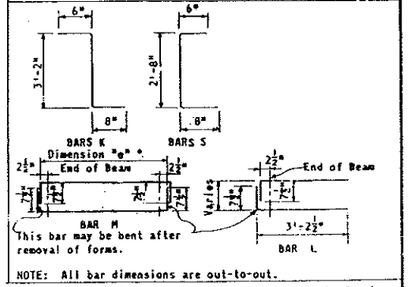

NOTE: All bar dimensions are out-to-out.

* See Dimension "e" in Table of Dimensions on this Sheet.

NOTE: For General Notes see Sheet No. B-31.

NOTE: For Bearing Details see Superstructure Drawings.

PRESTRESSED BEAMS TYPE II (18-10)
48 FT. SPANS FOR STRUCTURES A, B, C & D

STATE ROAD DEPARTMENT OF FLORIDA
BRIDGE DIVISION

BRIDGES BETWEEN ESTERO ISLAND AND BONITA BEACH

REVISIONS		ROAD NO.	COUNTY	PROJECT NO.
Dates	Descriptions	S-865	LEE	12530-3153

	Names	Dates
Detailed by	REN	1-61
Checked by	N.W.B.	2-61
Quantities by		
Checked by		
Traced by	REN	1-61

APPROVED BY: T. W. Lewis, Assistant State Highway Engineer

Drawing No. 29 of 60 | Index No. 7700

BX1-42

BX1-43

BX1-43

EB-17

FED. ROAD DIV. No.	STATE	PROJECT No.	FISCAL YEAR	SHEET No.
3	FLA.	12530-3153	61	B-31

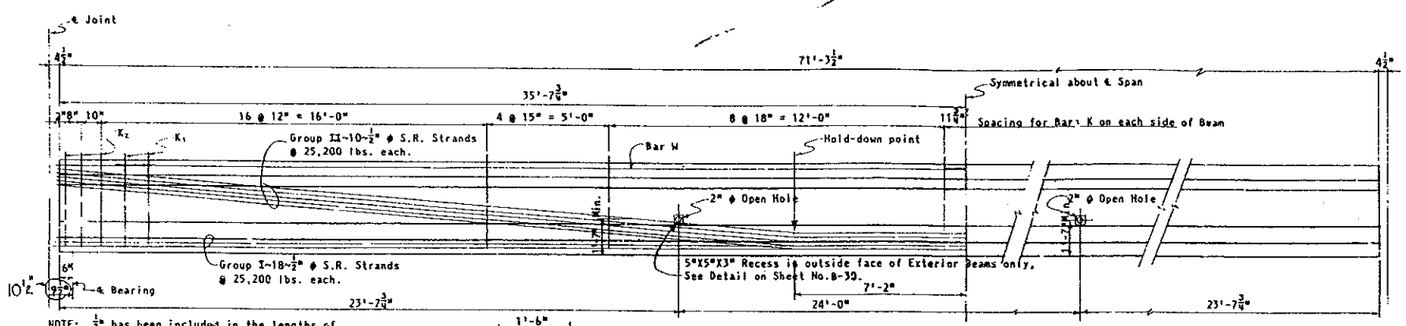

ELEVATION
TYPE III BEAM USING HARPED STRANDS

NOTE: ½" has been included in the lengths of Beams to compensate for Span lengths on Grade and elastic shortening.

NOTE: For Details of Expansion Shoes on Structure "A" see Sheet No. B-32.

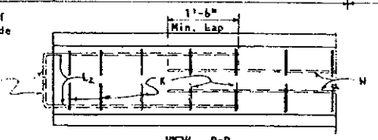

VIEW B-B

NOTE: Bars L may be bent after removal of forms.

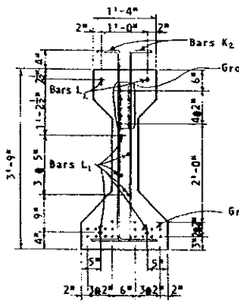

VIEW A-A

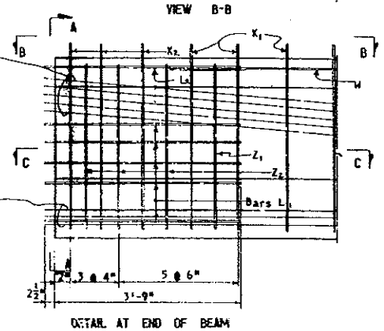

DETAIL AT END OF BEAM

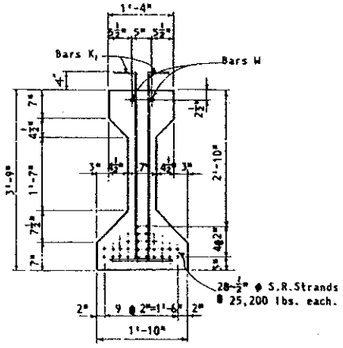

SECTION AT ℄ SPAN

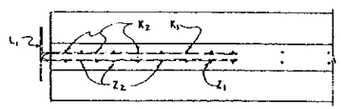

SECTION C-C

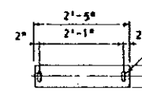

PLAN

NOTE: At the option of the Contractor, two bent bars 1"X½"X2'-6" long may be used in lieu of the four end welded studs shown.

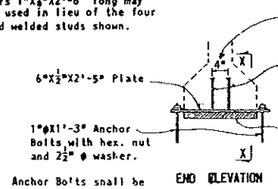

END ELEVATION

NOTE: Anchor Bolts shall be in accordance with A.S.T.M. Specification A-307.

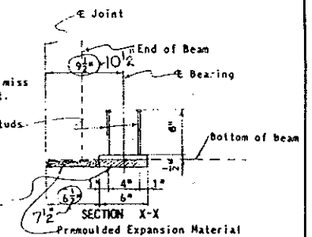

DETAIL OF BEARINGS FOR 72 FT. SPAN ON STRUCTURES "C" AND "D"

NOTE: Bearing Plates, Anchor Bolts, Nuts and Washers shall be hot dip galvanized in accordance with A.S.T.M. Specifications Designation A-123. The cost of Bearing Plates, Anchor Bolts, Nuts, Washers, Neoprene Pads and Premoulded Expansion Material shall be included in the Contract Unit Price for prestressed beams. At the option of the contractor two bent bars 1"X2'-1" may be used in lieu of the 4-¾" ϕ Stud Anchors shown.

BILL OF REINFORCING STEEL FOR ONE BEAM

MARK	SIZE	NO. REQ'D.	LENGTH
K1	4	112	5'- 3"
K2	5	12	5'- 3"
L1	4	12	4'- 8"
L2	5	4	4'- 8"
Z1	4	4	4'-11"
Z2	5	12	4'-11"
W	5	2	68'- 3"

BENDING DIAGRAMS

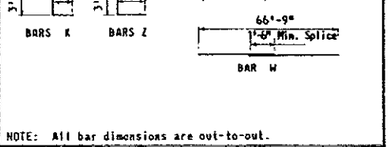

NOTE: All bar dimensions are out-to-out.

NOTE: For "Detail of Intermediate Diaphragm Bar at Exterior Beam" see Sheet No. B-30 .

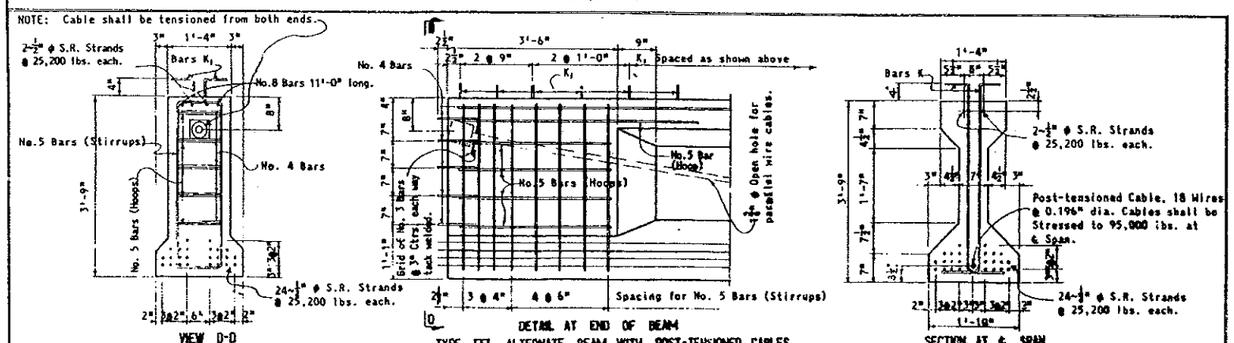

TYPE III ALTERNATE BEAM WITH POST-TENSIONED CABLES

NOTE: Anchorages for post-tensioned Cables shall be set normal to Cables.

GENERAL NOTES

SHOP DRAWINGS: Contractor shall submit Shop Drawings showing complete details of Beams including Reinforcing Steel.
FORMS & PALLETS: All Beams shall be cast on Concrete Based: pallets and in metal forms.
FINISH: Tops of Beams to be rough floated. At approximately the time of initial set, entire top of beam shall be scrubbed transversely with coarse wire brush to remove all laitance and to produce a roughened surface for bonding slab.
CONCRETE: Concrete for Beams shall be Class P.
CYLINDER STRENGTH: At transfer of the tensioning load, the cylinder strength of concrete shall be 4000 p.s.i.
EXTENSIONS: All strands and wires shall extend 2½" beyond ends of beam.
HANDLING: In the handling of beams, they must be maintained in an upright position at all times and must be picked up from points located a maximum distance of 3'-6" from the ends of the beam.
GROUTING: All Post-tensioned reinforcement shall be grouted after stressing. See Art. 401.9 of the Specifications.
CURING COMPOUND: The use of membrane curing compound will not be permitted on the tops of top flanges of prestressed beams.

PRESTRESSED BEAMS TYPE III (18-16)
FOR STRUCTURES "A", "C" & "D"

STATE ROAD DEPARTMENT OF FLORIDA
BRIDGE DIVISION

BRIDGES BETWEEN ESTERO ISLAND AND BONITA BEACH

REVISIONS		ROAD NO.	COUNTY		PROJECT NO.
Date	Description	S-865	LEE		12530-3153
11/63	Changed location of ℄ Bearing from ℄ Brg. to edge of Slope Wall		Names	Dates	APPROVED BY
		Detailed by	R.C.B.	1-17-61	T. W. Jennings
		Checked by	N.W.B	1-27-61	Assistant State Highway Engineer
		Quantities by			
		Checked by			Drawing No. 30 of 60
		Traced by			Index No. 7700

Sheet 24 of 31

BX1-43

BX1-43

BX1-44

BX1-44

EB-18

FED. ROAD DIV. No.	STATE	PROJECT NO.	FISCAL YEAR	SHEET No.
3	FLA	12530-3153	61	B-32

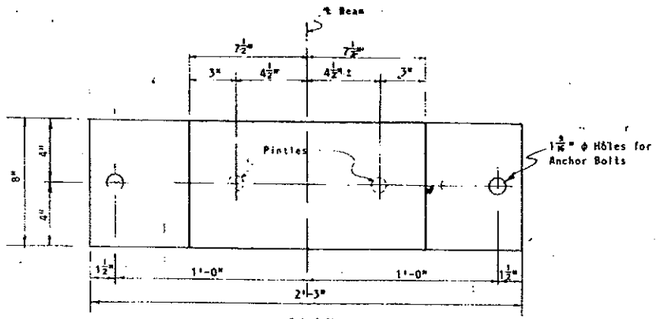

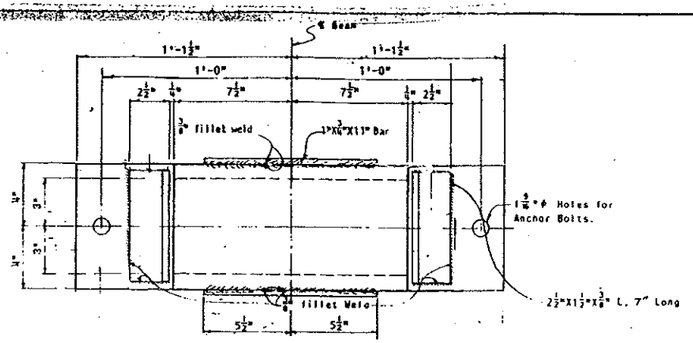

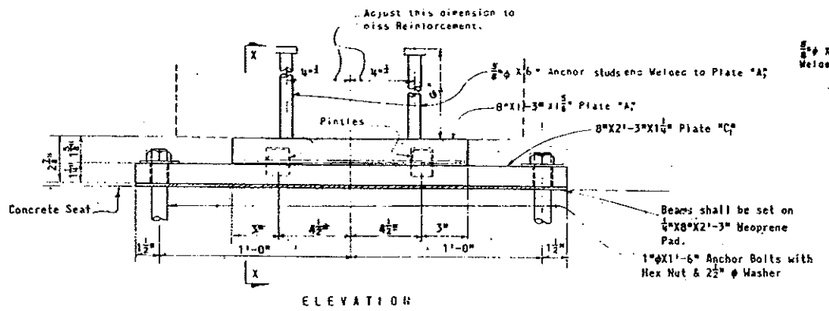

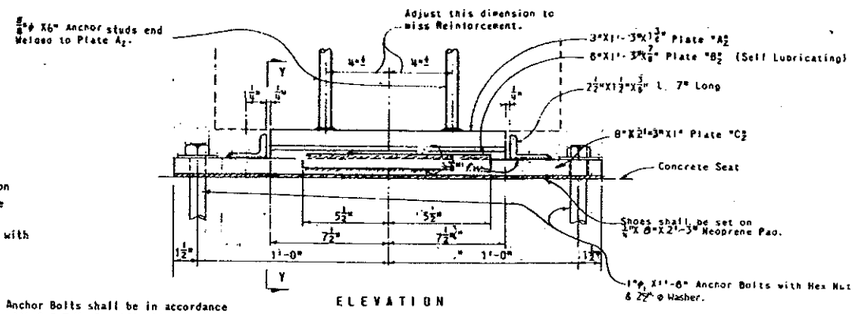

NOTE: Anchor Bolts shall be in accordance with A.S.T.M. Specification A-307.

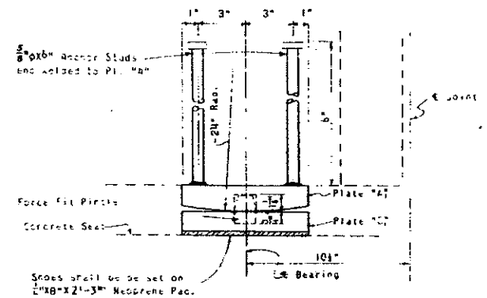

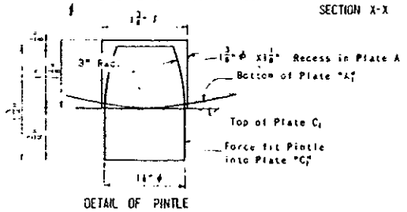

DETAILS OF SHOE AT FIXED END OF SPAN
(Weight of One Shoe Assembly= 148 lbs.)

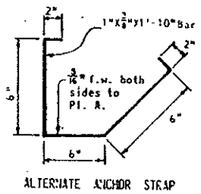

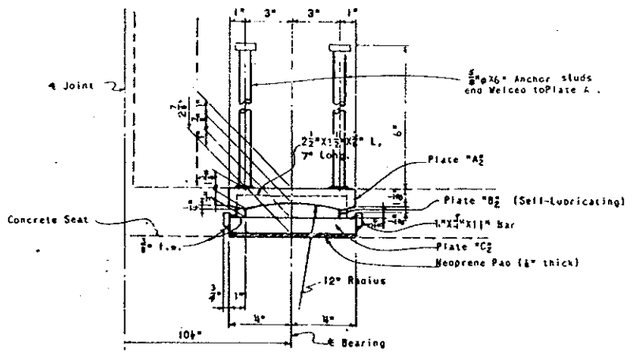

DETAILS OF SHOE AT EXPANSION END OF SPAN
(Weight of One Shoe Assembly= 152 lbs.)

NOTE: At the option of the Contractor two bent bars 1"X5/8"X11'-10" may be substituted for the four 5/8"ϕX6" Anchor Studs shown. (See "Alternate Anchor Strap," this sheet).

GENERAL NOTES

NEOPRENE PADS: Cost of Neoprene Pads shall be included in the Contract Lump Sum Price for Structural Steel (Shoe Assemblies).
SHOE MATERIAL: All Bearing Plates (except self-lubricating Plates) Anchor Bolts, Nuts, Washers and Pintles shall be hot dip galvanized in accordance with requirements of A.S.T.M. Specifications Designation A-123. Self-lubricating Plates shall conform to requirements of Articles 537.15 and 537.16 of the State Road Department Standard Specifications. Structural Steel Shoes may be A.S.T.M. Designations A-7, A-36 or A-373. Use of cast shoes will be permitted. The castings shall conform to A.S.T.M., 60.30 or 65-35. All Pits shallbe repaired by welding and shall be ground smooth, surface roughness shall not exceed 250 micro inches measured in accordance with A.S.A. Standards. Scale weights will be acceptable for payment.

BEARING SHOE ASSEMBLIES 72 FT. SPANS, STRUCTURE "A"

STATE ROAD DEPARTMENT OF FLORIDA
BRIDGE DIVISION

BRIDGES BETWEEN ESTERO ISLAND AND BONITA BEACH

REVISIONS		ROAD NO.	COUNTY		PROJECT NO.
Dates	Descriptions	S-865	LEE		12530-3153
			Names	Dates	APPROVED BY
		Detailed by	C.W.S.	5-60	T. W. Jennings
		Checked by	J.J.M.	5-60	Assistant State Highway Engineer
		Quantities by			Bridge No.
		Checked by			Drawing No. 31 of 60 Tracing No. 7109
		Traced by			

BX1-44

BX1-44

EB-19

FED. ROAD DIV. NO.	STATE	PROJECT NO.	FISCAL YEAR	SHEET NO.
3	FLA	12530-3153	61	B-33

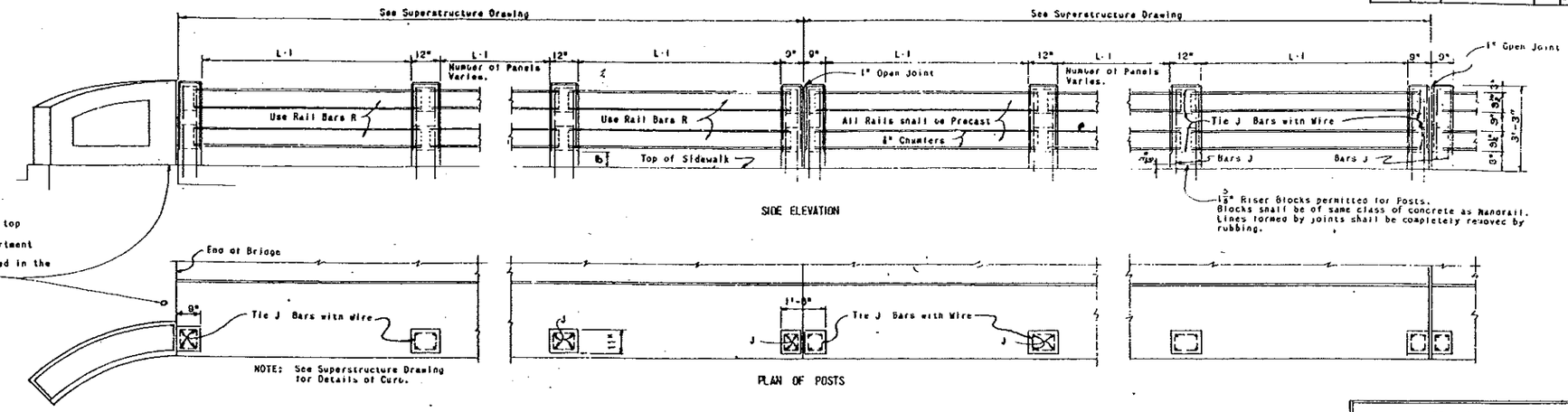

SIDE ELEVATION

$1\frac{5}{8}$" Riser Blocks permitted for Posts. Blocks shall be of same class of concrete as Handrail. Lines formed by joints shall be completely removed by rubbing.

NOTE: Markers recording the Elevation shall be placed on top of the curb near each end of Bridge. Markers are to be furnished by the State Road Department and installed by the Contractor. The cost of installing the Markers shall be included in the Contract Unit Price for Concrete Handrail.

NOTE: See Superstructure Drawing for Details of Curb.

PLAN OF POSTS

NOTE: See End Bent Drawings for End Post Details. Cost of End Post shall be paid for at the Contract Unit Price for Class A Concrete (Approach Spans) and Reinforcing Steel.

BENDING DIAGRAMS

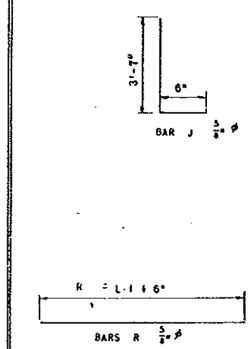

NOTE: All Bar Dimensions are out-to-out.

NOTE: At the option of the Contractor, 4 - $\frac{3}{8}$" ø S.R. Cables @ 14,000 lbs. each may be substituted for the 4 - ø 5 R Bars.

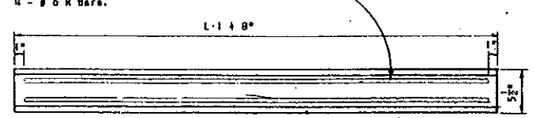

PLAN

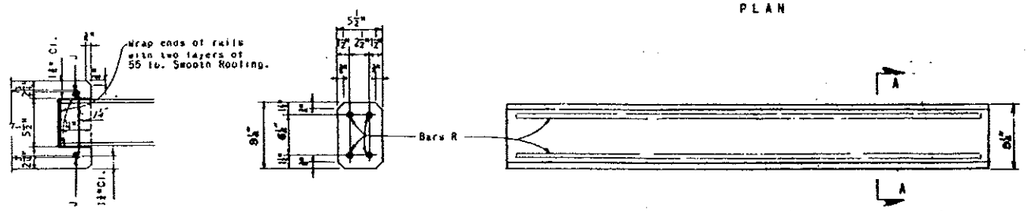

DETAIL AT POST

SECTION A-A

ELEVATION RAIL DETAIL

GENERAL NOTES

CONCRETE: Class A Concrete shall be used in Handrail.
CHAMFER: All exposed edges to be chamfered 3/4" unless otherwise shown.
REINFORCING STEEL: Reinforcing Steel shall conform to A.A.S.H.O. Specs. M 137.
FABRICATION OF REINFORCING STEEL: Reinforcing Steel shall be fabricated according to the A.A.S.H.O Manual of Recommended practice for Detailing Reinforced Concrete Highway Structures.
PAYMENT: Handrail shall be paid for per linear foot which shall include all Concrete and reinforcing steel in the Handrail.
Handrail shall be measured along ℄ of Rail with no deduction for Open Joints.
Deductions shall be made for 2'-8" openings at Safety Gates and 1'-9" at Traffic Lights.

CONCRETE HANDRAIL STRUCTURES "A" THRU "D"

STATE ROAD DEPARTMENT OF FLORIDA
BRIDGE DIVISION

BRIDGES BETWEEN ESTERO ISLAND AND BONITA BEACH

REVISIONS	
Dates	Descriptions

ROAD NO.	COUNTY	PROJECT NO.
S-865	LEE	12530 - 3153

	Names	Dates
Detailed by	A.J.H	6-58
Checked by	K.L.V.	7-58
Quantities by		
Checked by		
Traced by	A.J.H	6-59

APPROVED BY

Drawing No. 32 of 60

Index No. 7700

33

EB-20

FED. ROAD DIV. NO.	STATE	PROJECT NO.	FISCAL YEAR	SHEET NO.
3	FLA	12530-3153	61	B-[illegible]

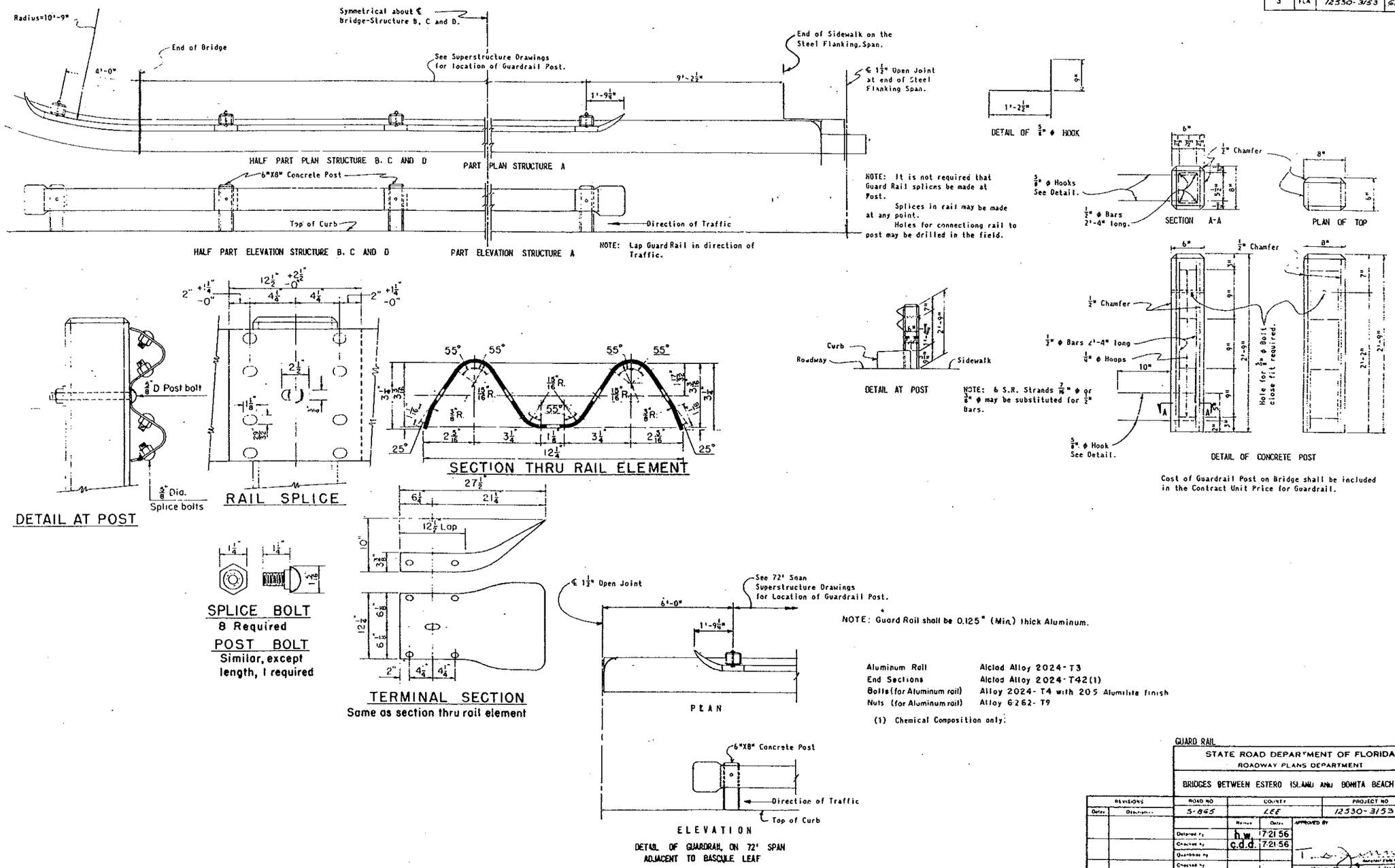

NOTE: Guard Rail shall be 0.125" (Min.) thick Aluminum.

Aluminum Rail	Alclad Alloy 2024-T3
End Sections	Alclad Alloy 2024-T42(1)
Bolts (for Aluminum rail)	Alloy 2024-T4 with 205 Alumilite finish
Nuts (for Aluminum rail)	Alloy 6262-T9

(1) Chemical Composition only.

GUARD RAIL

STATE ROAD DEPARTMENT OF FLORIDA
ROADWAY PLANS DEPARTMENT

BRIDGES BETWEEN ESTERO ISLAND AND BONITA BEACH

REVISIONS		ROAD NO	COUNTY	PROJECT NO
Date	Description	S-865	LEE	12530-3153

	Name	Date	APPROVED BY
Detailed by	h.w.	7-21-56	
Checked by	c.d.d.	7-21-56	
Quantities by			
Checked by			
Traced by	h.w.	7-21-56	Drawing No. 33 of 60 — Title No. 7700

34

BX1-47

EB-21

FED. ROAD DIV. No.	STATE	PROJECT No.	FISCAL YEAR	SHEET No.
3	FLA.	12530-3153	61	B-35

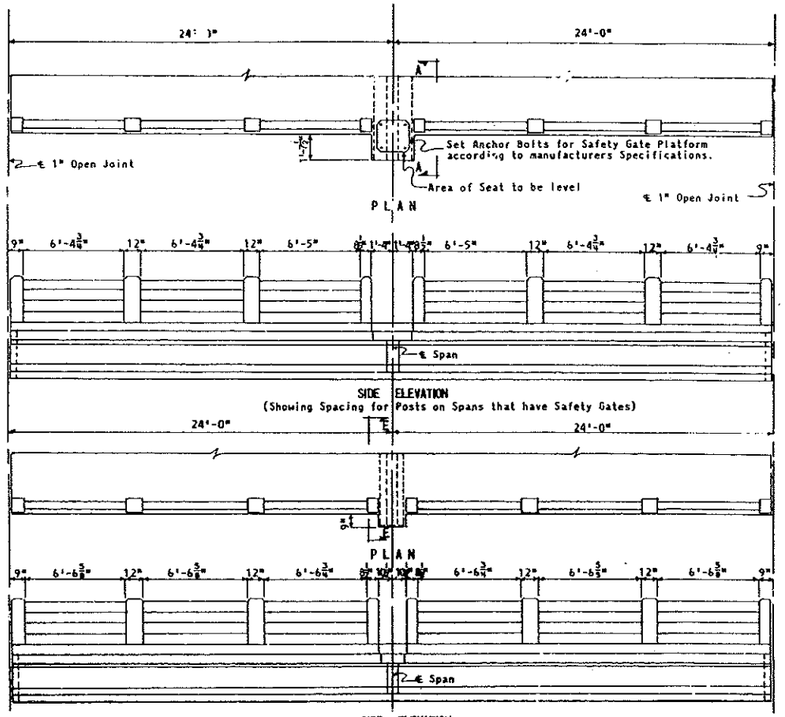

SIDE ELEVATION

(Showing spacing for Posts on Spans that have a Traffic Light and Signal Bell)

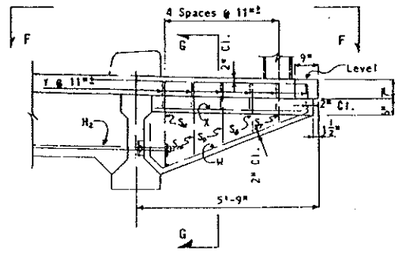

SECTION E-E

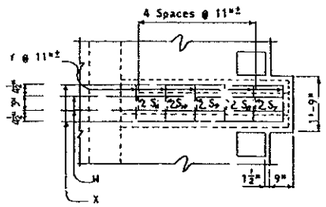

VIEW F-F

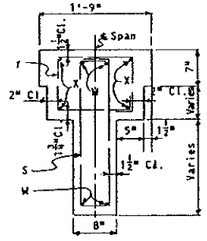

SECTION G-G

NOTE: The Estimated Quantities shown are in addition to the Estimated Quantities shown on the Superstructure Drawings that have Safety Gate Platforms or Traffic Light and Signal Bell Platforms.

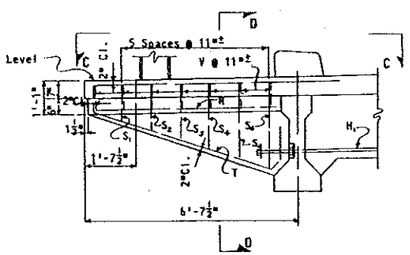

SECTION A-A

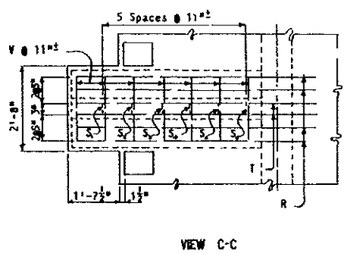

VIEW C-C

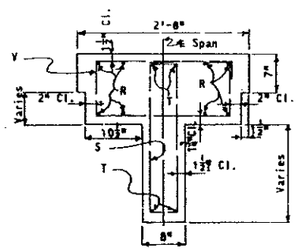

SECTION D-D

* Bar H_1 is smooth, round structural or intermediate grade steel rod with course threads, heavy duty nuts & 4"X4"X¼" Pl. Bar H_1 shall be substituted for Bar H in Superstructures that have Safety Gate Platforms.

** Bar H_2 is smooth, round structural or intermediate grade steel rod with course threads, heavy duty nuts & 4"X4"X¼" Pl. Bar H_2 shall be substituted for Bar H in Superstructures that have Traffic Light Platforms.

BILL OF REINFORCING STEEL*

MARK	SIZE	NO. REQUIRED (SAFETY GATE PLATFORM)	NO. REQUIRED (TRAFFIC LIGHT & SIGNAL BELL PLATFORM)	LENGTH
H_1 *	1" ϕ	1		30'- 4"
H_2 **	1" ϕ		1	29'- 4"
R	4	4		14'- 1"
S_1	4	1		3'- 5"
S_2	4	1		4'- 1"
S_3	4	1		4'- 9"
S_4	4	1		5'- 5"
S_5	4	1		6'- 1"
S_6	4	1		6'- 9"
S_7	4		1	3'- 9"
S_8	4		1	4'- 7"
S_9	4		1	5'- 3"
S_{10}	4		1	6'- 1"
S_{11}	4		1	6'- 9"
T	8	2		17'- 3"
W	8		2	15'- 2"
V	4	7		6'- 6"
X	4		2	12'- 3"
r	4		6	4'- 8"

BENDING DIAGRAMS

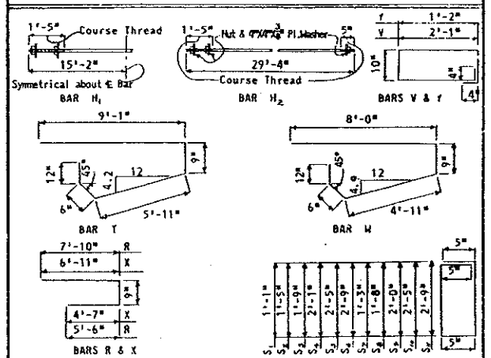

NOTE: All bar dimensions are cut-to-out.

ESTIMATED QUANTITIES*

ITEM	SAFETY GATE PLATFORM UNIT	SAFETY GATE PLATFORM QUANTITY	TRAFFIC LIGHT & SIGNAL BELL PLATFORM UNIT	TRAFFIC LIGHT & SIGNAL BELL PLATFORM QUANTITY
Class A Concrete (Approach Spans)	Cu. Yd.	.53	Cu. Yd.	.31
Reinforcing Steel	Lb.	186	Lb.	136

*Concrete and reinforcing steel quantities shown are for one Safety Gate Platform or one Traffic Light & Signal Bell Platform.

DETAILS OF TRAFFIC LIGHT AND SAFETY GATE PLATFORMS HANDRAIL FOR 48 FT. SPAN - STRUCTURE A

STATE ROAD DEPARTMENT OF FLORIDA
BRIDGE DIVISION

BRIDGES BETWEEN ESTERO ISLAND AND BONITA BEACH

REVISIONS Date	Descriptions

ROAD NO.	COUNTY	PROJECT NO.
S-865	LEE	12530-3153

	Names	Dates
Detailed by	B.R.L	1-61
Checked by	J.L.P.	1-61
Quantities by	B.R.L	1-61
Checked by	J.L.P.	1-61
Traced by	B.R.L	1-61

APPROVED BY: T. W. Jennings
Assistant State Highway Engineer

Drawing No. 39 of 60
Index No. 7700

BX1-47

BX1-47

BX1-48

BX1-48

EB-22

FED. ROAD DIV. No.	STATE	PROJECT No.	FISCAL YEAR	SHEET No.
3	FLA.	12530-3153	'61	8-36

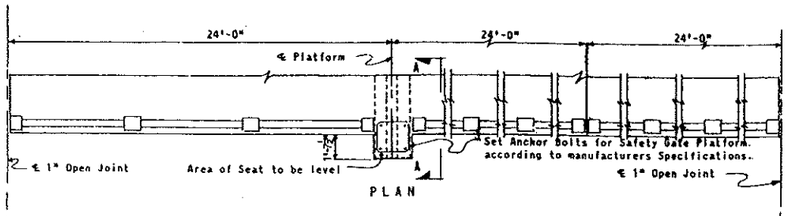

PLAN

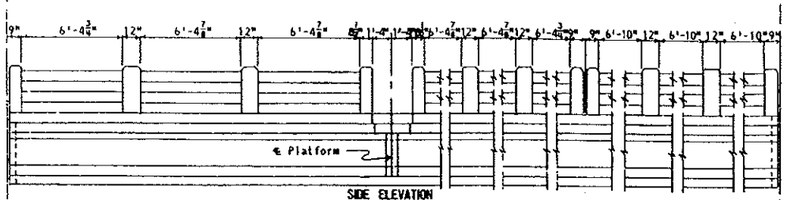

SIDE ELEVATION
(Showing spacing for Posts on Spans that have Safety Gates)

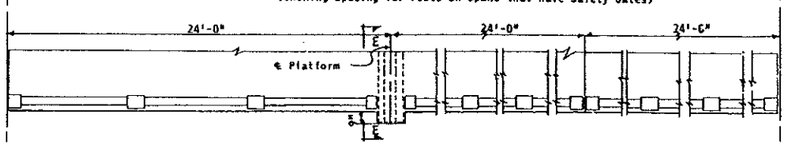

PLAN

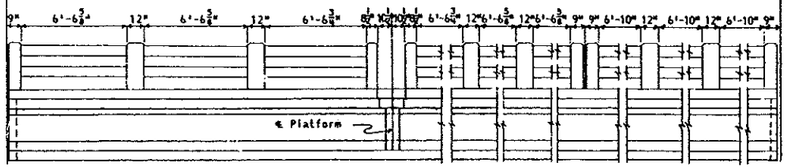

SIDE ELEVATION
(Showing spacing for Posts on Spans that have a Traffic Light and Signal Bell)

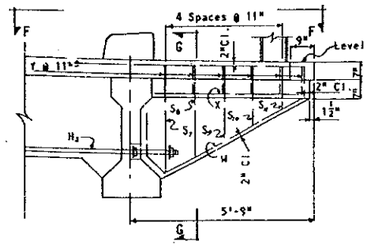

SECTION E-E

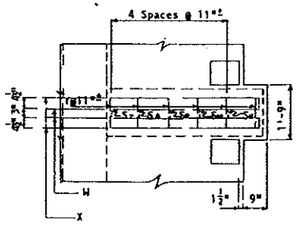

VIEW F-F

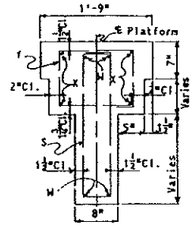

SECTION G G

BILL OF REINFORCING STEEL*

MARK	SIZE	NO. REQ'D. (SAFETY GATE PLATFORM)	NO. REQ'D. (TRAFFIC LIGHT & SIGNAL BELL PLATFORM)	LENGTH
H**	1"ø	1		30'- 5"
H**	1"ø		1	29'- 5"
R	4	4		14'- 2"
S_1	4	1		8'- 1"
S_2	4	1		7'- 3"
S_3	4	1		6'- 5"
S_4	4	1		5'- 7"
S_5	4	1		4'- 7"
S_6	4	1		3'- 9"
S_7	4		1	8'- 1"
S_8	4		1	7'- 1"
S_9	4		1	5'-11"
S_{10}	4		1	4'-11"
S_{11}	4		1	3'-11"
T	8	2		17'- 5"
W	8		2	15'- 6"
V	4	7		6'- 8"
X	4		2	12'- 4"
Y	4		6	4'-10"

BENDING DIAGRAMS

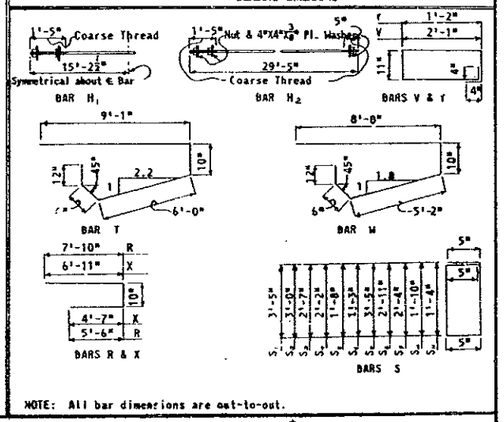

NOTE: All bar dimensions are out-to-out.

ESTIMATED QUANTITIES*

	SAFETY GATE PLATFORM		TRAFFIC LIGHT & SIGNAL BELL PLATFORM	
ITEM	UNIT	QUANTITY	UNIT	QUANTITY
Class A Concrete (Approach Spans)	Cu. Yd.	.61	Cu. Yd.	.37
Reinforcing Steel	Lb.	191	Lb.	141

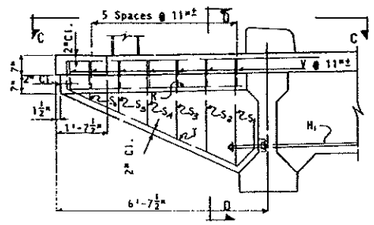

SECTION A-A

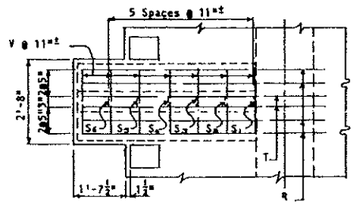

VIEW C-C

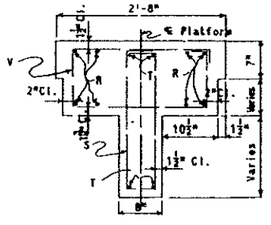

SECTION D-D

* Concrete and reinforcing steel quantities shown are for One Safety Gate Platform or One Traffic Light & Signal Bell Platform.

* Bar H, is smooth, round structural or intermediate grade steel rod with course threads, heavy duty nuts & 4"X4"X⅜" Plate
Bar H, shall be substituted for Bar H in Superstructures that have safety gate platforms.

** Bar H_2 is smooth, round structural or intermediate grade steel rod with course threads, heavy duty nuts & 4"X4"X⅜" Plate
Bar H_2 shall be substituted for Bar H in Superstructures that have Traffic Light Platform.

NOTE: The Estimated Quantities shown are in addition to the Estimated Quantities shown on the Superstructure Drawings that have Safety Gate Platforms or Traffic Light and Signal Bell Platforms.

DETAILS OF TRAFFIC LIGHT AND SAFETY GATE PLATFORMS HANDRAIL FOR 72 FT. SPANS - STRUCTURE A

STATE ROAD DEPARTMENT OF FLORIDA
BRIDGE DIVISION

BRIDGES BETWEEN ESTERO ISLAND AND BONITA BEACH

REVISIONS		ROAD NO.	COUNTY	PROJECT NO.
Date	Description	S-865	LEE	12530-3153

	Names	Date
Detailed by	B.R.L.	1-61
Checked by	A.M.S.	2-61
Quantities by	B.R.L.	1-61
Checked by	A.M.S.	2-61
Traced by	B.R.L.	1-61

APPROVED BY T. W. Jennings
Assistant State Highway Engineer

Drawing No. 35 of 60 | Index No. 7700

BX1-48

BX1-48

BX1-49

BX1-49

EB-23

FED. ROAD DIV. NO.	STATE	PROJECT NO.	FISCAL YEAR	SHEET NO.
3	FLA.	12530-3153	61	B-37

BILL OF REINFORCING STEEL

MARK	SIZE	No. Req'd	LENGTH	LOCATION	BENDING
A	5	68	38'-2"	Slab	See Diagram
B	5	136	37'-5"	Slab	"
B1	5	8	27'-10"	Slab	"
C	4	70	41'-0"	Slab & Curb	Straight
C1	4	20	44'-10"	Sidewalk Slab	"
D	4	62	3'-4"	Curb	See Diagram
E	#1" ϕ	2	28'-3"	Diaphragms	"
F	4	2	27'-6"	"	Straight
G	4	27	5'-11"	"	See Diagram
J	4	27	1'-2"	Diaphragms	"
K	5	1	27'-6"	"	Straight

BENDING DIAGRAMS

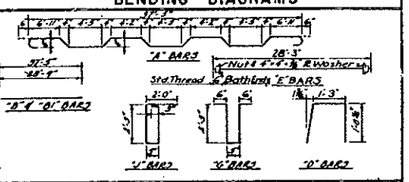

ESTIMATED QUANTITIES

ITEM	UNIT	QUANTITY
Class "A" Concrete . (Approach Spans)	Cu.Yd.	42.64
Reinforcing Steel	Lb.	11,534
Structural Steel (Flanking Span, Ladders & Platforms) Lump Sum *	*	*
Shear Connectors (3"ϕ)	Lb.	973

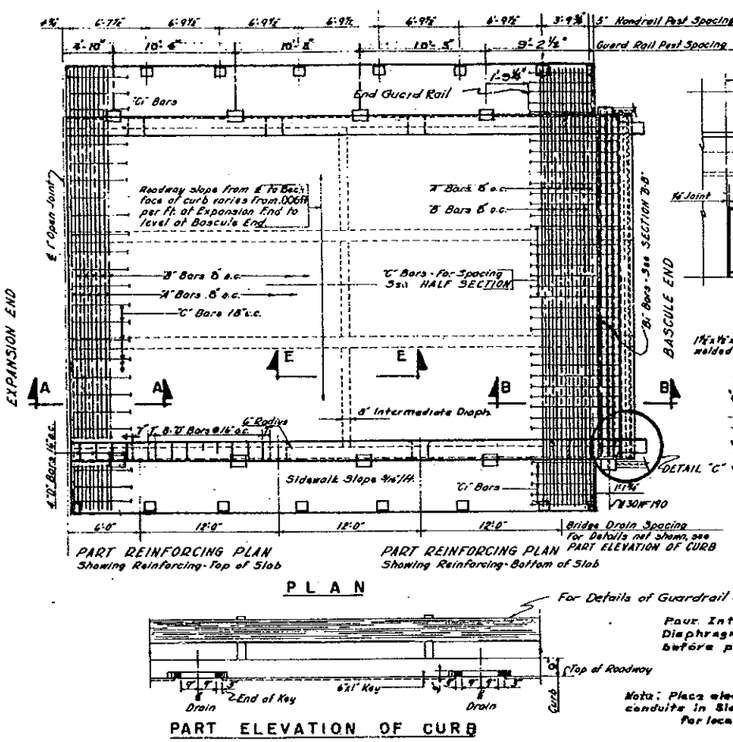

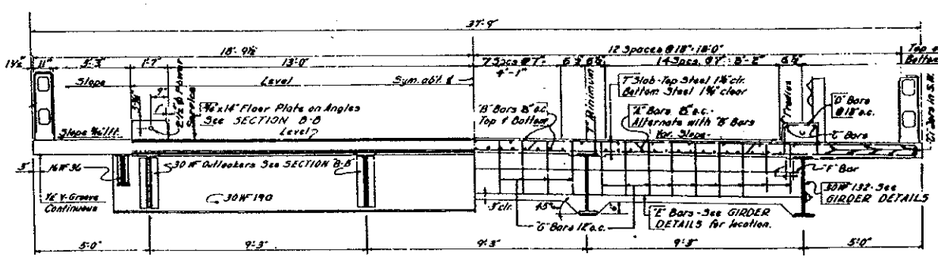

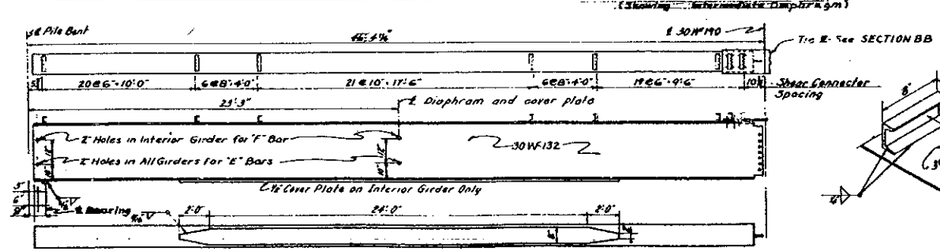

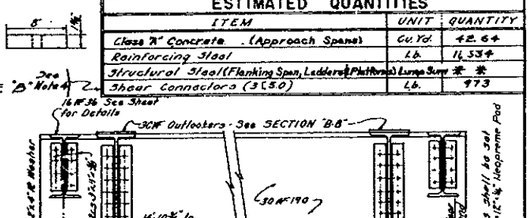

NOTES

1. Paint shall be 7/8 ϕ or High Tension Bolts.
2. For General Notes see Sheet No B-1.
3. See Estimated Bridge Quantities. (The estimated Quantity of Structural Steel for one Steel Flanking Span is 35,280 Lbs.)
4. If Welded Stud Shear Connector Alternate is selected, 4-3/4" ϕ studs shall be paid for as 8" of 3"ϕ Shear Connectors.
5. ½" Neoprene Pads to be included in Contract Unit Price for Structural Steel (Steel Flanking Span, Ladders & Platforms).
6. Bill of Reinforcing Steel and Estimated Quantities are for one Span.

STRUCTURE A — STEEL FLANKING SPAN

STATE ROAD DEPARTMENT OF FLORIDA
BRIDGE DIVISION

BRIDGES BETWEEN ESTERO ISLAND AND BONITA BEACH

REVISIONS Date	Description

ROAD NO.	COUNTY	PROJECT NO.
S-865	LEE	12530-3153

	Name	Date
Detailed by	G.C.L.	7-67
Checked by	L.H.	8-67
Quantities by	L.H.S.	9-67
Checked by	W.B.	9-67
Traced by	G.C.L.	7-67

APPROVED BY

Drawing No. 36 of 60 — Index No. 7700

BX1-49

BX1-49

BX1-50

BX1-50

EB-24

FED. ROAD DIV. NO.	STATE	PROJECT NO.	FISCAL YEAR	SHEET NO.
3	FLA.	12530-3153	'63	B-38

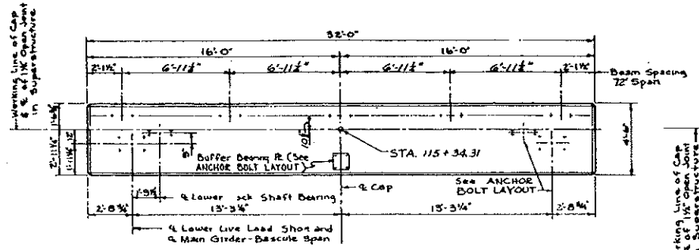

PLAN OF CAP

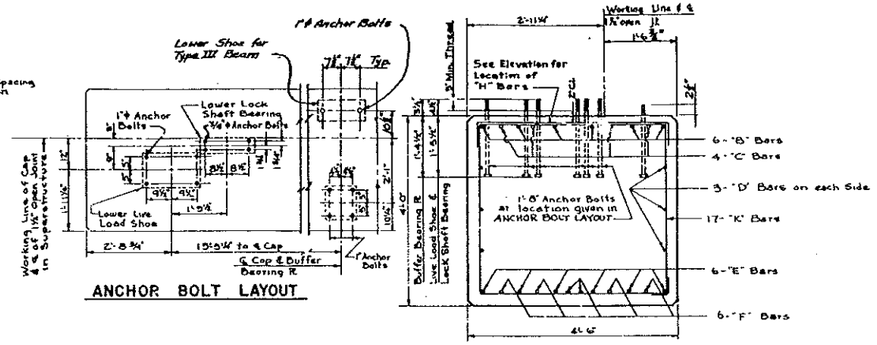

ANCHOR BOLT LAYOUT

SECTION A-A

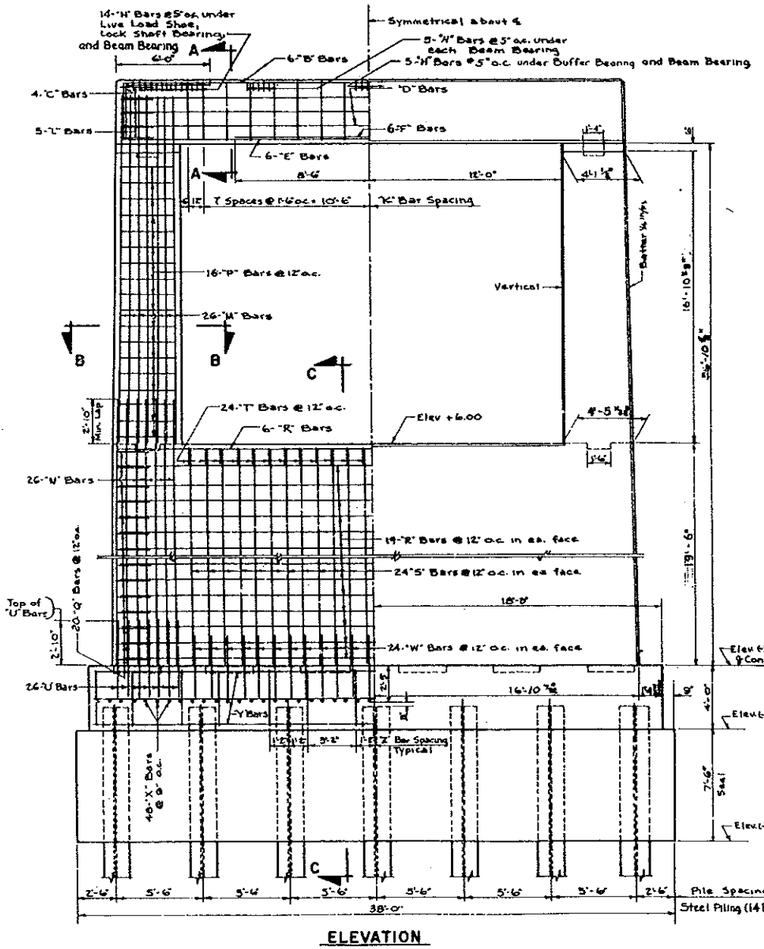

ELEVATION

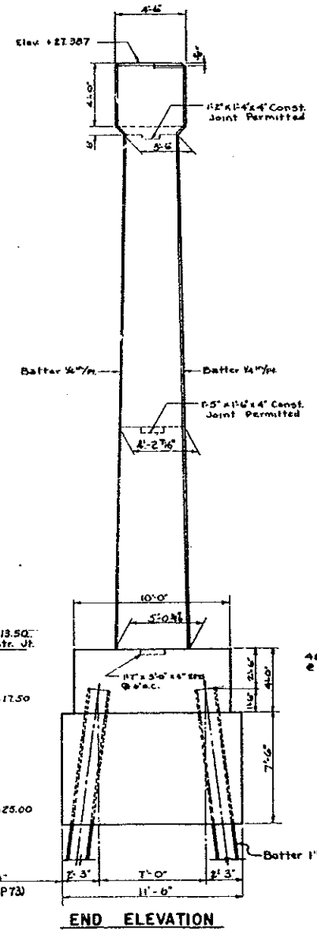

END ELEVATION

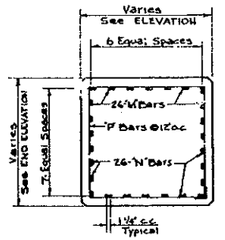

SECTION B-B

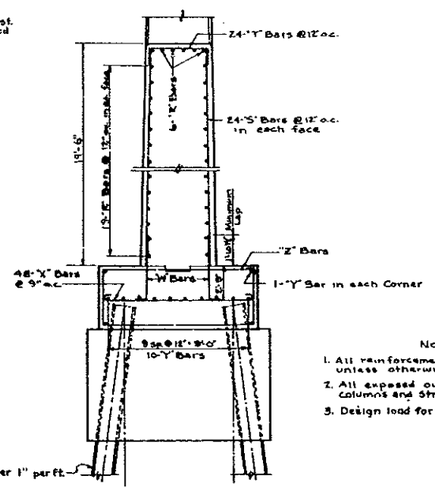

SECTION C-C

BILL OF REINFORCING STEEL

MARK	SIZE	No REQ'D	LENGTH	LOCATION	BENDING
B	9	6	38'-1"	Top of Cap	See Diagram
C	9	8	8'-1"	Top of Cap	See Diagram
D	6	6	31'-6"	Sides of Cap	Straight
E	10	6	31'-8"	Bottom of Cap	Straight
F	10	6	17'-0"	Bottom of Cap	Straight
H	4	43	5'-0"	Top of Cap	See Diagram
K	5	17	16'-2"	Cap Stirrups	See Diagram
L	6	10	8'-0"	End of Cap	See Diagram
M	9	52	20'-5"	Column	Straight
N	9	52	22'-6"	Column	Straight
P	5	32	Varies - See Diag. Ave. = 18'-3"	Column Stirrups	See Diagram
Q	5	40	Varies See Diag. Ave. = 5'-1½"	Col. Sides at Strut	See Diagram
R	5	44	32'6"	Strut	Straight
S	6	48	19'-3"	Strut	Straight
T	6	24	31'-9"	Top of Strut	See Diagram
U	9	52	31'-7"	Dowels in Footing	See Diagram
W	6	48	4'-8"	Dowels in Footing	See Diagram
X	6	48	10'-10"	Footing	See Diagram
Y	6	14	56'-0"	Footing	Straight
Z	6	14	26'-8	Footing Stirrups	See Diagram

BENDING DIAGRAMS

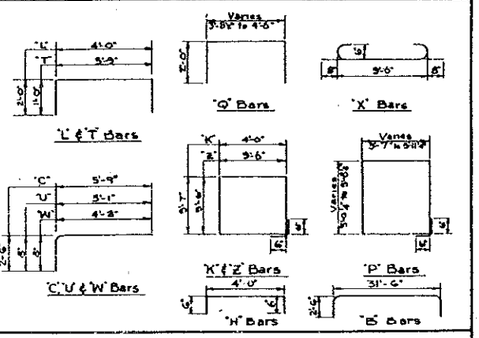

ESTIMATED QUANTITIES

ITEM	UNIT	QUANTITY
Class A Concrete (Trunnion Pier & Rest Pier)	Cu. Yd.	207.43
Seal Concrete	Cu. Yd.	120.81
Reinforcing Steel	Lb.	17,981
Steel Piling Furnished (14 BP 73)	Lin. Ft.	*
Steel Piling Driven (14 BP 73)	Lin. Ft.	*

* For Piling Quantity, see Estimated Bridge Quantities on Sheet B-1.

Notes

1. All reinforcement to have 3" cover unless otherwise noted.
2. All exposed outside edges of cap, columns and strut to be chamfered 1½"x1½".
3. Design load for piles: 55 Tons.

STRUCTURE 'A' - REST PIER I-E

STATE ROAD DEPARTMENT OF FLORIDA
BRIDGE DIVISION

BRIDGES BETWEEN ESTERO ISLAND AND BONITA BEACH

REVISIONS		ROAD NO.	COUNTY	PROJECT NO.
Date	Description	S-865	LEE	12530-3153
1-64	¾" Step on Cap Seal			

	Name	Date
Detailed by	W.P.	1-61
Checked by	R.E.N.	4-61
Quantities by	R.E.N.	4-61
Checked by	N.W.B.	4-61
Traced by		

APPROVED BY: T. W. Lewis, Assistant State Highway Engineer

Drawing No. 37 of 60 | Index No. 7700

BX1-50

BX1-50

BX1-51

BX1-51

EB-25

FED. ROAD DIV. NO.	STATE	PROJECT NO.	FISCAL YEAR	SHEET NO.
3	FLA.	12530-3153	'63	B-39

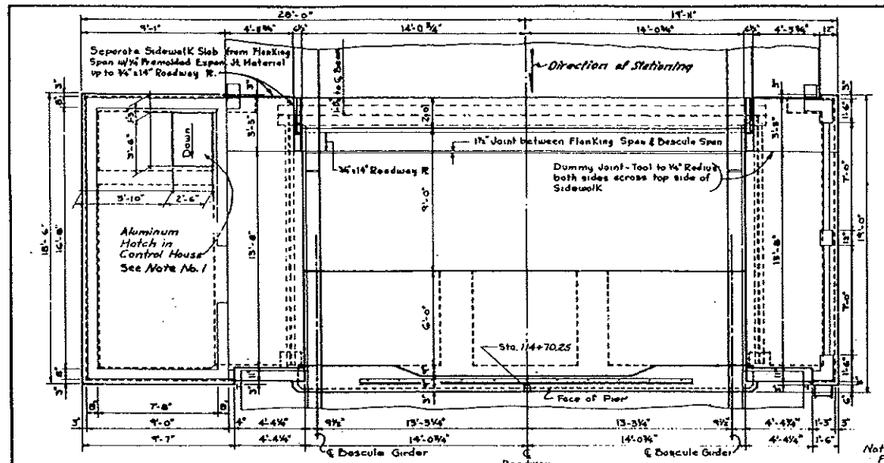

PLAN OF PIER

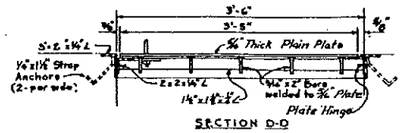

SECTION D-D

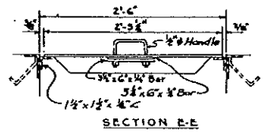

SECTION E-E

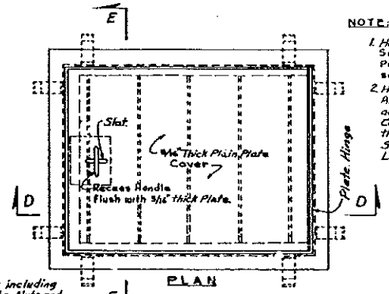

PLAN

DETAIL "Y"

NOTE:
1. Hatch located in Control House: Size of Slab opening 3'-6" x 2'-6". Provision shall be made to hold cover securely while in open position
2. Hatch Cover and Frames shall be Aluminum Alloy 6061-T6 fabricated according to the details shown. Hatch Cover and Frames shall be included in the Contract Lump Sum Price for Structural Steel (Flanking Spans, Ladders and Platforms).

Note: All Steel for Ladders including Plates, Shoes, Bars, Bolts, Nuts and Washers shall be hot dip galvanized in accordance with requirements of A.S.T.M. Specification Designation A-123. Welding of parts shall be done prior to galvanizing.

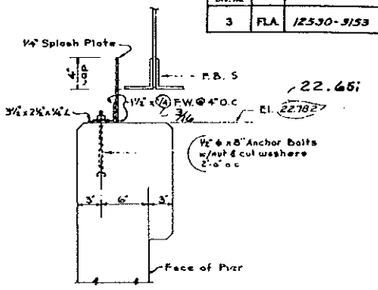

SECTION F-F

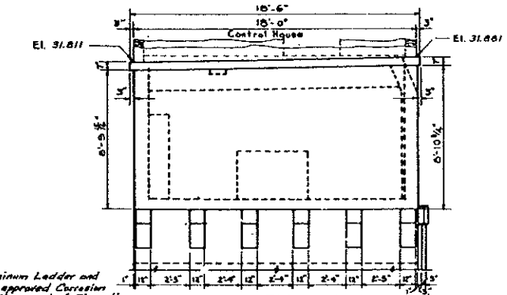

ELEVATION A-A

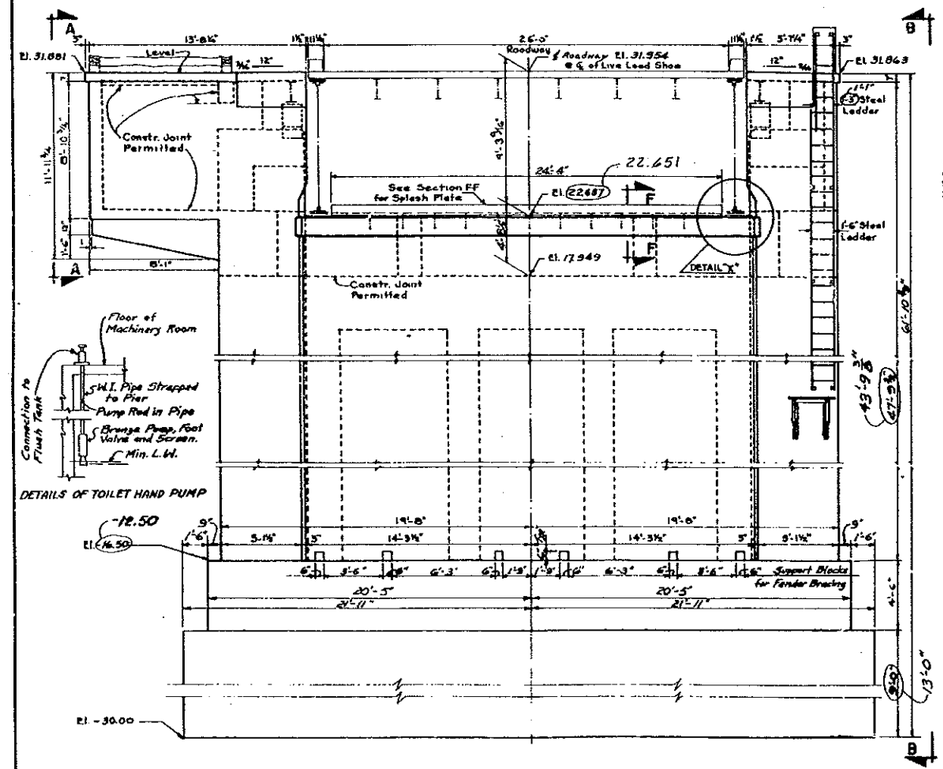

FRONT ELEVATION

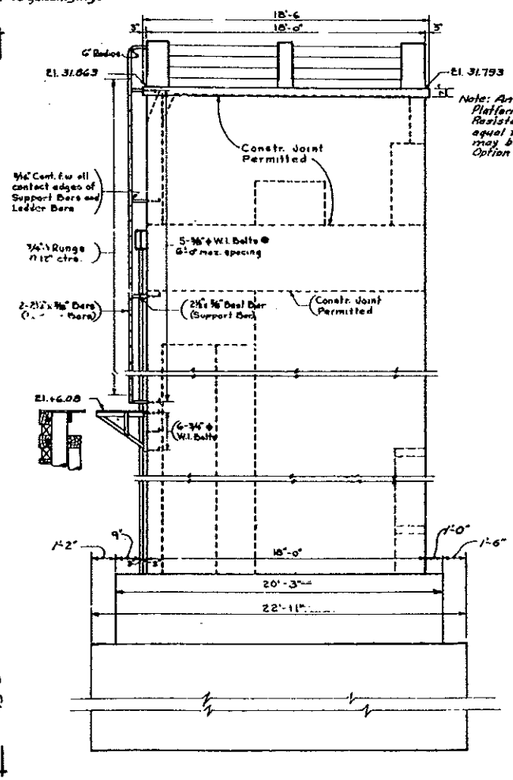

ELEVATION B-B

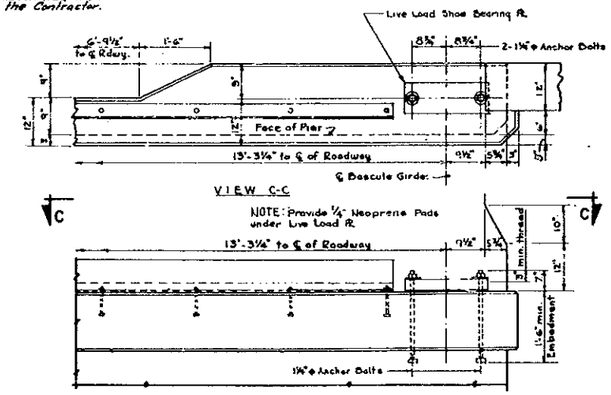

DETAIL "X"

STRUCTURE A

TRUNNION PIER - GENERAL LAYOUT

STATE ROAD DEPARTMENT OF FLORIDA
BRIDGE DIVISION

BRIDGES BETWEEN ESTERO ISLAND AND BONITA BEACH

REVISIONS		ROAD NO.	COUNTY		PROJECT NO.
Date	Descriptions	S-865	LEE		12530-3153
1-64	Revised Steel Plate Details		Names	Dates	APPROVED BY
		Details by	J.L.P.	1-61	
		Checked by	R.L.T.	2-61	
		Quantities by			
		Checked by			
		Traced by			

Drawing No. 38 of 60 | Index No. 7700

BX1-51

BX1-51

EB-26

FED. ROAD DIV. NO.	STATE	PROJECT NO.	FISCAL YEAR	SHEET NO.
3	FLA.	12530-3153	'63	B-40

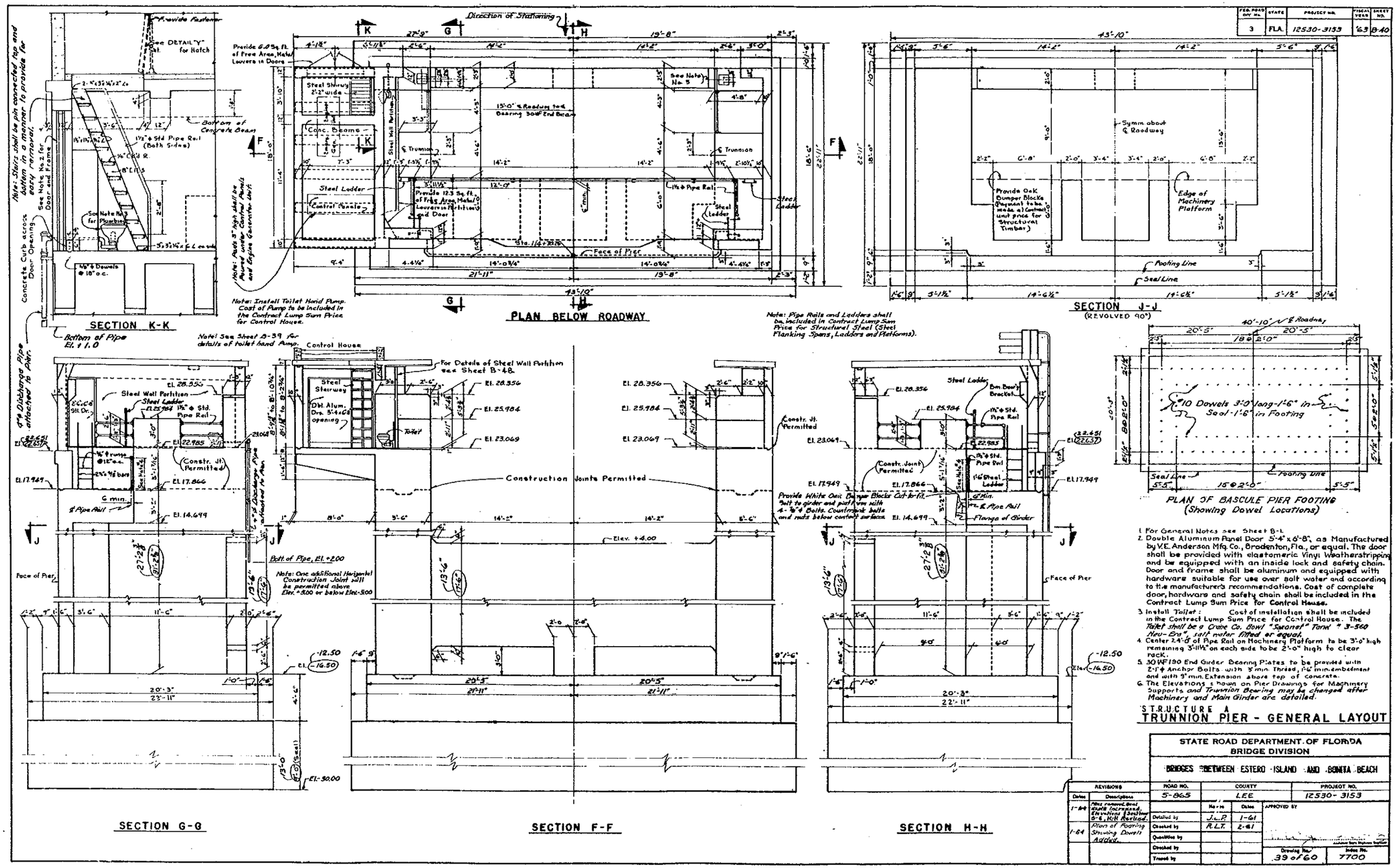

PLAN OF BASCULE PIER FOOTING
(Showing Dowel Locations)

1. For General Notes see Sheet B-1.
2. Double Aluminum Panel Door 5'-4" x 6'-8", as Manufactured by V.E. Anderson Mfg. Co., Bradenton, Fla., or equal. The door shall be provided with elastomeric Vinyl Weatherstripping and be equipped with an inside lock and safety chain. Door and frame shall be aluminum and equipped with hardware suitable for use over salt water and according to the manufacturer's recommendations. Cost of complete door, hardware and safety chain shall be included in the Contract Lump Sum Price for Control House.
3. Install Toilet: Cost of installation shall be included in the Contract Lump Sum Price for Control House. The Toilet shall be a Crane Co. Bowl "Saranet" Tank # 3-560 Neu-Era", salt water fitted or equal.
4. Center 2.4'-0" of Pipe Rail on Machinery Platform to be 3'-0" high remaining 3'-11½" on each side to be 2'-0" high to clear rack.
5. 30 WF 190 End Girder Bearing Plates to be provided with 2-1" ϕ Anchor Bolts with 3" min. Thread, 1'-6" min. embedment and with 9" min. Extension above top of concrete.
6. The Elevations shown on Pier Drawings for Machinery Supports and Trunnion Bearing may be changed after Machinery and Main Girder are detailed.

STRUCTURE A
TRUNNION PIER - GENERAL LAYOUT

STATE ROAD DEPARTMENT OF FLORIDA
BRIDGE DIVISION

BRIDGES BETWEEN ESTERO ISLAND AND BONITA BEACH

REVISIONS		ROAD NO.	COUNTY	PROJECT NO.
Dates	Descriptions	5-865	LEE	12530-3153
1-64	Plan removed. Seal depth increased. Elevations of Section G-G, H-H Revised.		Name / Dates	APPROVED BY
		Detailed by	J.L.P. 1-61	
1-64	Plan of Footing Showing Dowels Added.	Checked by	R.L.T. 2-61	
		Quantities by		
		Checked by		Drawing No. 39 of 60 / Index No. 7700
		Traced by		

BX1-53

BX1-53

EB-27

FED. ROAD DIV. No.	STATE	PROJECT NO.	FISCAL YEAR	SHEET NO.
3	FLA.	12530-3153	63	B-41

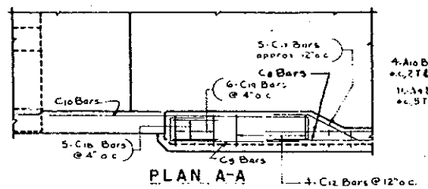

PLAN A-A

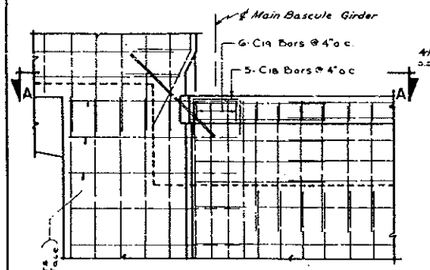

ELEVATION AT LIVE LOAD SHOE

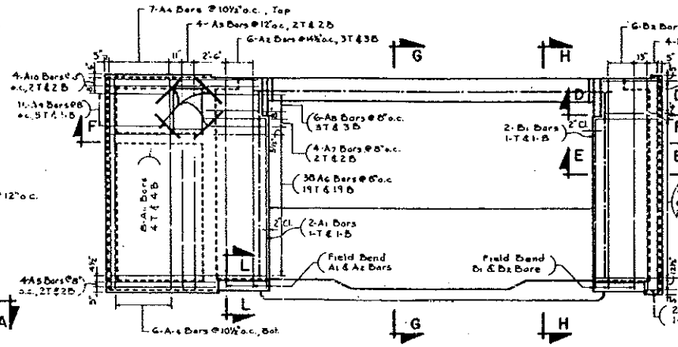

PLAN SHOWING TOP SLABS

NOTE: For SECTIONS F-F, G-G, H-H & L-L; See Sheet No. B-42.

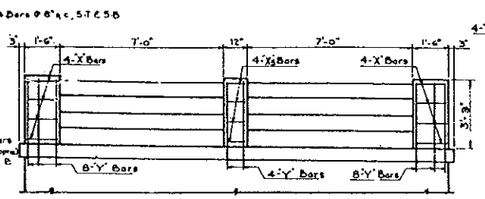

ELEVATION B-B

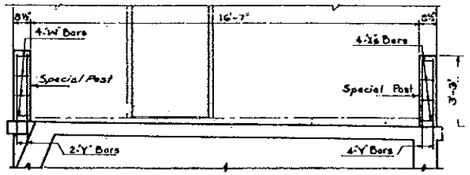

ELEVATION C-C

Handrail Notes:
1. All handrail and handrail posts on Trunnion Pier, including special posts at Control House, shall be paid for at the Contract Unit Price for Concrete Handrail.
2. For details of handrail not shown, see sheet No. B-33.

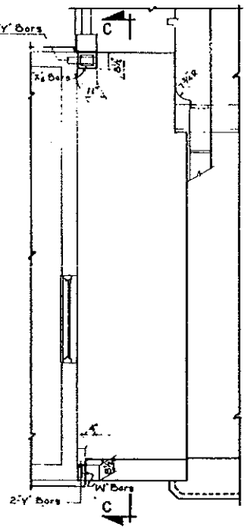

PLAN SPECIAL POSTS

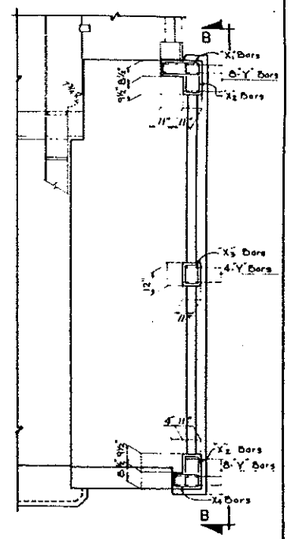

PLAN HANDRAIL POST

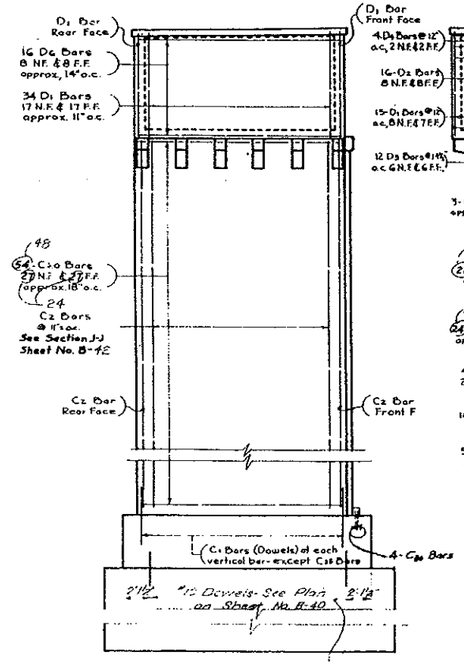

LEFT SIDE ELEVATION

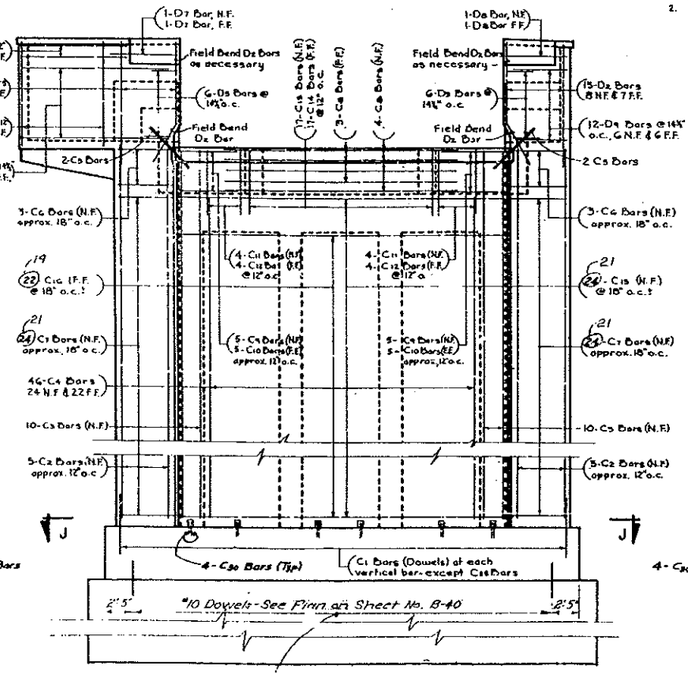

FRONT ELEVATION

Note: Dowels (#10) 3'-0" long imbedded in Seal 1'-6" and on 2'-0" centers, according to Specification 320.31, as shown on Sheet No B-40.

NOTE: For SECTION J-J, see Sheet No. B-42

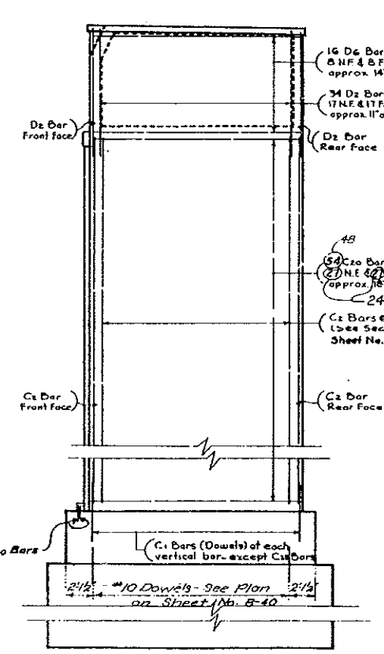

RIGHT SIDE ELEVATION

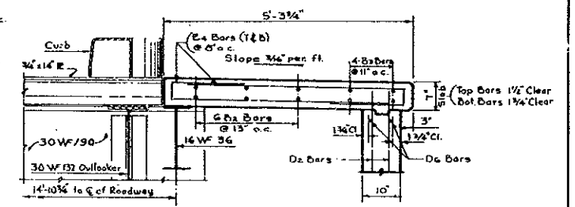

SECTION D-D

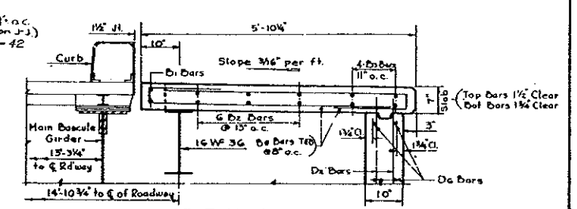

SECTION E-E

STRUCTURE A

TRUNNION PIER - REINFORCING DETAILS

STATE ROAD DEPARTMENT OF FLORIDA
BRIDGE DIVISION

BRIDGES BETWEEN ESTERO ISLAND AND BONITA BEACH

REVISIONS		ROAD NO.	COUNTY		PROJECT NO.
Date	Descriptions	S-865	LEE		12530-3153
1/64	Piles Removed Seal depth increased		Names	Dates	APPROVED BY
1-64	Dowels added between Seal and Footing	Detailed by	J.L.P.	1-61	
		Checked by	R.L.T.	2-61	
		Quantities by			
		Checked by			
		Traced by			

Drawing No. 40 of 40 | Index No. 7700

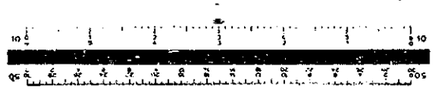

BX1-53

BX1-53

BX1-54

EB-28

FED. ROAD DIV. No.	STATE	PROJECT No.	FISCAL YEAR	SHEET No.
3	FLA	12530-3133	63	9-42

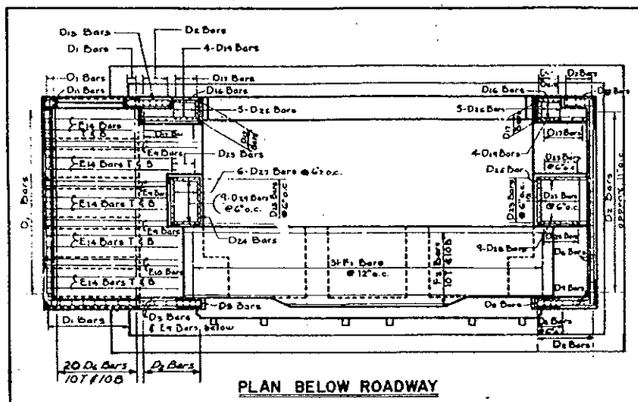

BX1-55

BX1-55

EB-29

FED. ROAD DIV. NO.	STATE	PROJECT NO.	FISCAL YEAR	SHEET NO.
3	FLA.	12530-3153	'63	S-43

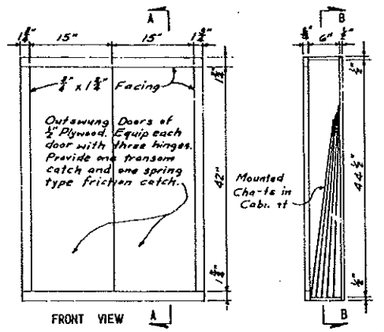

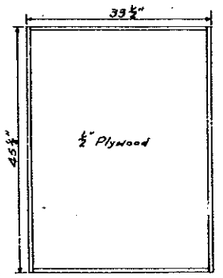

SECTION B-B

DETAILS OF CABINET FOR WIRING DIAGRAMS AND LUBRICATION CHARTS

Cabinet to be mounted on wall in Machinery Room as directed by the Engineer.

Wiring Diagrams and Lubrication Charts shall be mounted on 1/4" Plywood and Varnished.

All exterior and interior surfaces shall be painted with two coats of dark green commercial paint of the best grade.

HANDRAIL POST REINFORCING DETAILS *

MARK	SIZE	No. REQ'D	LENGTH	BENDING	LOCATION
W	2	4	6"	Straight	4"x6 1/2" Spec. Post
X1	2	4	4'-11"	See Diagram	End Post
X2	2	8	4'-8"	↕	End Posts
X3	2	4	3'-8"	↕	Intermediate Post
X4	2	4	3'-9"	↕	End Post
X5	2	4	3'-1"	↕	11 1/2 x 8 1/2" Spec. Post
Y	5	26	5'-8"	See Diagram	All Posts

BENDING DIAGRAMS

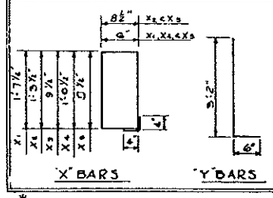

* Cost of Handrail Post Reinforcing Steel to be included in the Contract Unit Price for Concrete Handrail

ESTIMATED QUANTITIES

ITEM	UNIT	QUANTITY
Class A Concrete (Trunnion Pier & Foot Pier)	Cu. Yd.	634 - 593
Structural Steel (Planking Span, Ladders and Platforms)	Lump Sum	**
Seal Concrete	Cu. Yd.	348 - 484
Reinforcing Steel	Lb.	31,950 40,090
Steel Piling Furnished (14BP73)	Lin. Ft.	***
Steel Piling Driven (14BP73)	Lin. Ft.	***
Concrete Handrail	Lin. Ft.	21

** See Estimated Bridge Quantities on sheet No. B-1 (The estimated quantity of Structural Steel in Trunnion Pier is 4200 lbs.).

*** See Estimated Bridge Quantities, Sheet No. B-1.

BILL OF REINFORCING STEEL

BENT BARS

MARK	SIZE	No. REQ'D	TYPE	DIMENSIONS A	B	C	D	LENGTH	LOCATION
A1	4	2	②	14'-1"	4"	6"	—	14'-7"	Sidewk at Control House
A2	4	6	②	17'-6"	4"	6"	—	18'-0"	Sidewalk at Control House
A3	4	4	②	13'-4"	4"	6"	—	13'-10"	Control House Floor
A4	4	13	②	18'-0"	4"	6"	—	18'-6"	Control House Floor
A5	4	4	②	9'-1"	4"	6"	—	9'-7"	Control House Floor
A6	4	38	②	13'-5"	4"	6"	—	13'-11"	Control Hse. Fl. and Sidewalk
A7	4	4	②	5'-2"	4"	6"	—	5'-8"	Sidewalk at Control House
A8	4	6	①	4'-0"	4"	6"	—	4'-6"	Sidewalk at Control House
A9	4	10	②	5'-4"	4"	6"	—	5'-10"	Control House Floor
A10	4	4	②	12'-10"	4"	6"	—	13'-4"	Control Hse. Fl. and Sidewalk
A12	8	4	⑦	—	—	—	—	14'-8"	Control Hse. Floor Beam
A13	8	1	①	—	—	—	—	18'-10"	Control Hse. Floor Beam
A15	3	16	⑥	9"	1'-8"	4"	4"	5'-7"	Control Hse. Floor Beam
B1	4	2	②	14'-1"	4"	6"	—	14'-7"	Sidewalk
B2	4	6	②	17'-6"	4"	6"	—	18'-0"	↕
B3	4	4	③	17'-9"	4"	6"	—	18'-3"	
B4	4	10	②	4'-11"	4"	6"	—	5'-4"	
B5	4	44	②	5'-5"	4"	6"	—	5'-9"	
B6	4	2	②	1'-2"	4"	6"	—	1'-8"	Sidewalk
C6	8	6	⑨	2'-9"	7'-6"	—	—	3'-9"	Front Pier Wall
C7	5	40 42	⑨	2'-9"	7'-1"	—	—	3'-10"	↕
C9	8	10	⑨	5'-4"	5'-1"	1'-6"	—	8'-4"	
C10	5	10	④	10'-6"	2'-1"	1'-6"	—	13'-1"	
C12	5	8	⑪	1'-5"	6'-6"	7"	—	9'-2"	
C19	4	17	⑪	8"	6'-6"	7"	—	8'-5"	
C18	5	40 41	④	2'-6"	28'-6"	2'-6"	—	33'-5"	Front Pier Wall
C17	4	10	⑨	1'-6"	2'-8"	—	—	4'-2"	Live Load Shoe Wall
C16	4	10	④	1'-6"	2'-0"	1'-6"	—	5'-0"	Live Load Shoe Wall
C15	4	12	⑪	1'-5"	1'-8"	1'-6"	—	4'-1"	Live Load Shoe Wall
C21	5	44 39	④	1'-9"	4'-6"	11'-7"	—	9'-1"	Pier Wall, Inside Corner
C22	5	34	④	1'-9"	5'-6"	1'-9"	—	8'-6"	Rear Pier Wall
C20	5	42	⑥	1'-6"	7'-6"	8"	8"	18'-4"	Pilasters
C24	5	2	⑥	1'-6"	3'-6"	8"	8"	11'-4"	Strut
C26	5	18	⑭	1'-6" 1'-6"	11'-6" 11'-6"	—	—	40'-0" 40'-0"	Strut
D1	4	56	④	9"	8'-1"	9"	—	10'-5"	Wall below Control House
D3	4	12	④	2'-5"	13'-2"	—	—	15'-5"	Wall below Control House
D4	4	4	⑨	2'-3"	9'-6"	—	—	11'-3"	Wall below Control House
D5	4	12	④	2'-5"	8"	2'-5"	—	5'-2"	Front Wall below Sidewalk
D9	4	12	⑤	2'-5"	4'-6"	—	—	6'-4"	Front Wall below Sidewalk
D10	6	6	⑨	11'-6"	11"	—	—	12'-5"	Rear Wall over Platform Door
D11	4	5	⑮	10"	11"	—	—	4'-3"	Wall Corner next to Door
D12	4	6	⑤	8"	11'-6"	6"	6"	5'-4"	Rear Wall over Platform Door
D13	4	3	⑤	6"	3'-9"	6"	6"	4'-10"	Rear Wall below Sidewalk
D14	5	4	⑬	2'-0"	2'-0"	—	—	4'-0"	Rear Wall, Corner of wall & Sidewk
D15	4	4	⑥	8"	6'-5"	6"	6"	14'-10"	Rear Wall below Sidewalk
D16	4	16	⑥	1'-6"	11'-6"	6"	6"	14'-0"	Flanking Span Beam Pedestal
D18	4	3	⑩	2'-7"	2'-6"	—	—	7'-1"	Rear Wall below Sidewalk
D19	4	8	⑧	—	—	—	—	7'-1"	Flanking Span Beam Pedestal
D20	5	6	⑨	5'-6"	10'-6"	—	—	14'-0"	Inner Pier Wall
D22	5	6	④	1'-0"	7'-6"	1'-0"	—	9'-0"	Inner Pier Wall
D24	4	11	⑥	4'-0"	2'-6"	6"	6"	14'-6"	Trunnion Pedestal
D26	4	11	⑥	4'-0"	4'-6"	6"	6"	18'-6"	Trunnion Pedestal
D26	4	10	④	1'-0"	1'-11"	1'-0"	—	3'-11"	Flanking Span Beam Pedestal
D27	4	14	④	1'-0"	4'-8"	1'-0"	—	6'-2"	Trunnion Pedestal
D28	4	9	④	1'-0"	4'-10"	1'-0"	—	6'-10"	Trunnion Pedestal
D29	4	9	④	1'-0"	2'-11"	1'-0"	—	4'-11"	Trunnion Pedestal
E1	3	6	⑥	7 1/2"	1'-5"	3"	4"	4'-9"	Bracketed Platform
E2	3	6	⑥	7 1/2"	1'-7 1/2"	4"	4"	5'-2"	↕
E3	3	6	⑥	7 1/2"	1'-9 1/2"	4"	4"	5'-6"	
E4	3	6	⑥	7 1/2"	1'-11 1/2"	4"	4"	5'-10"	
E6	3	6	⑥	7 1/2"	2'-1 1/2"	4"	4"	6'-3"	
E6	3	6	⑥	7 1/2"	2'-4 1/2"	4"	4"	6'-7"	
E7	3	6	⑥	7 1/2"	2'-6 1/2"	4"	4"	7'-0"	
E8	3	6	⑥	7 1/2"	2'-8 1/2"	4"	4"	7'-4"	
E9	7	10	⑮	12'-11"	—	—	—	28'-7"	
E10	7	2	⑨	11'-2"	—	—	—	26'-10"	
E12	8	10	⑨	4'-5"	12'-6"	—	—	17'-0"	
E13	8	2	⑨	4'-5"	11'-5"	—	—	15'-6"	Bracketed Platform
F1	5	31	⑭	2'-1"	70'	—	—	22'-4"	Machinery Platform
G1	6	6	⑤					4'-7	Bracket
G2	3	4	⑥	10"	1'-4 1/2"	4"	4"	5'-1"	Bracket
G3	4	4	④	6"	11"	6"	—	1'-11"	Bracket

STRAIGHT BARS

MARK	SIZE	No. REQ'D.	LENGTH	LOCATION
A11	4	12	31'-0"	Corner of openings
A14	5	6	8'-11"	Beam Control House Floor
C1	5	186	3'-0"	Dowels at Footing
C2	5	78	37'-2"	Pier Walls
C3	5	20	38'-11"	Front Pier Wall below L.L.S.
C4	5	88	44'-1"	Front Pier Wall
C5	5	4	5'-0"	Front Pier Wall at L.L.S.
C8	4	7	20'-4"	Front Pier Wall
C11	5	8	6'-6"	Front Pier Wall
C13	4	17	6'-6"	Front Pier Wall
C16	5	22 5/4	31'-0"	Front Pier Wall
C20	5	108 96	17'-6"	Pier Wall Sides
C28	6	10	18'-0" 22'-9"	Strut
C27	6	6	6'-6"	Strut
C29	6	6	12'-0"	Strut
C24	6	6 6 32	37'-0"	Strut
C30	4	24	1'-5"	Front of Pier on Footing
D2	4	82	10'-9"	Pier Walls below Sidewalk
D6	4	52	17'-6"	Pier Wall sides & Bracketed Platf.
D7	4	2	5'-10"	Front Pier Wall at Sidewalk
D8	4	2	5'-5"	Front Pier Wall at Sidewalk
D17	5	31	10'-1"	Flanking Span Bm. Pedestal
D21	5	14	7'-10"	Inner Pier Wall
D23	5	49	9'-0"	Trunnion Pedestal
D30	5	4	5'-6"	Flanking Span Beam Pedestal
E11	8	12	8'-6"	Bracketed Platform
E14	4	20	11'-4"	Bracketed Platform
F2	8	20	38'-0"	Machinery Platform
H1	10	48	40'-4"	Footing
H2	6	84	19'-9"	Footing
H3	6	21	40'-4"	Footing

BENDING DIAGRAM TYPES

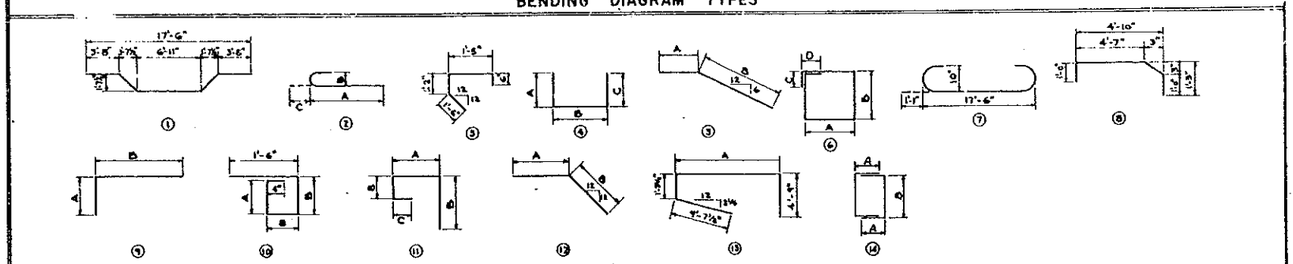
17'-6"
3'-8" 3 7/16" 6'-11" 3 7/16" 3'-8"
1'-6"
4'-10"
4'-2"
3"
1'-6"
17'-6"
1'-6"
1'-6"
1

BX1-56

BX1-56

EB-30

FED. ROAD DIV. NO.	STATE	PROJECT NO.	FISCAL YEAR	SHEET NO.
3	FLA.	12530-3153	63	B-42

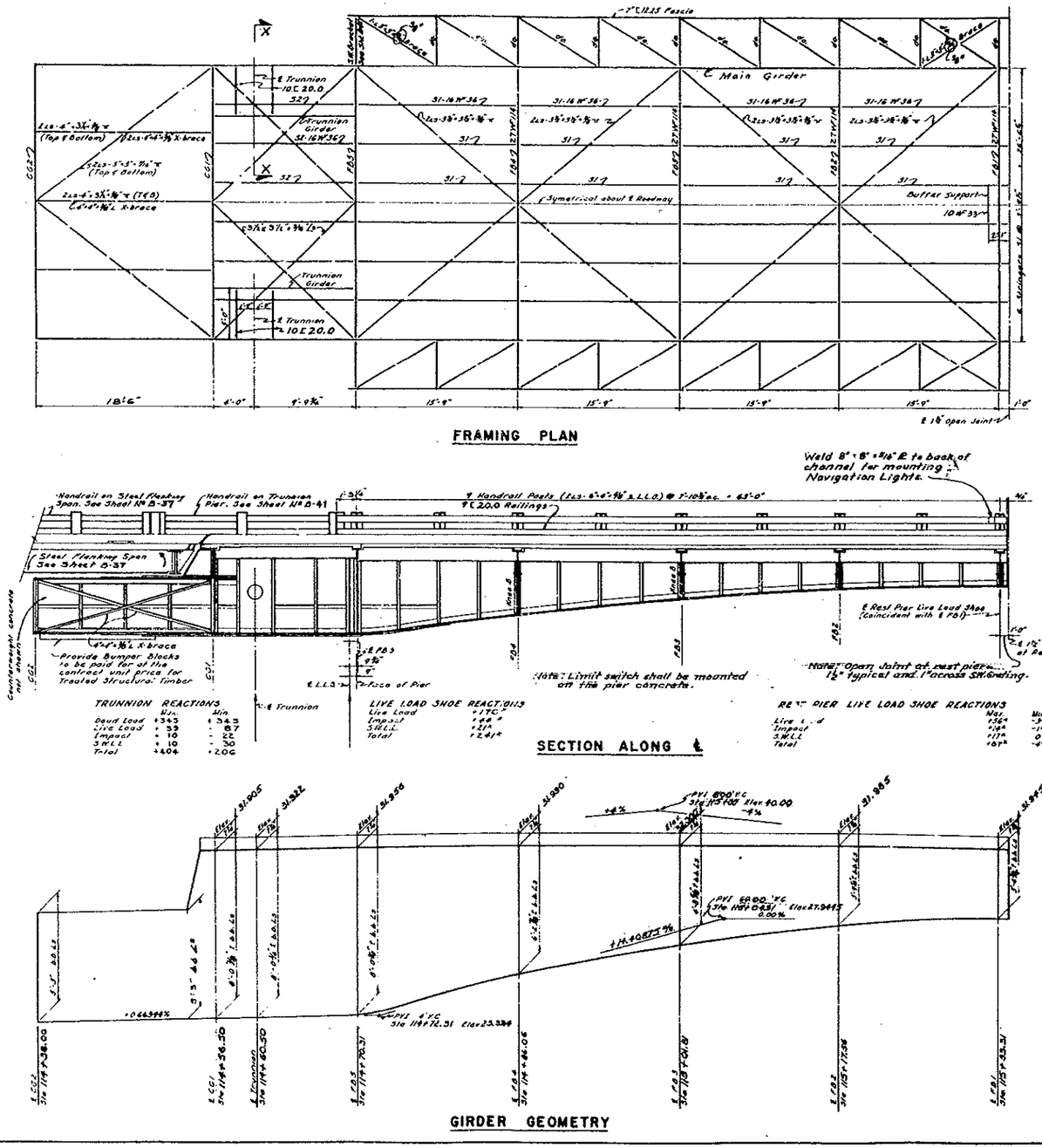

FRAMING PLAN

SECTION ALONG ℄

GIRDER GEOMETRY

STRESSES IN MAIN GIRDERS

POINT	SHEAR IN KIPS D.L.	L.L.	IMP.	S.W.	REV.	DL+20%	D+L+I	MAX	SHEAR STRESS	MOMENTS IN KIPS-FT. D.L.	L.L.	IMP.	S.W.	REV.	DL+20%	D+L+I	MAX	S.M. REQ'D	SECT. PROVIDED	I GROSS	I NET	S.M. GROSS	S.M. NET	STRESS COMP	STRESS TENS
FB1										-0.2	16	5	—	0	-0.3	22	22	147		16739	15226	908.6	738.2	0.29	0.36
	+15.0	+2.0	-0.5	0	+8.8	+18.0	-75.8	-75.8	5.0	-0.2	0	5			-0.3										
	0	-43.7	-11.3	-12.0		0																			
FB2										-208	-31	-10	0	±125	-250	+931	+931	6207		23918	19535	1037.1	847.0	10.77	13.18
										-129	+579	-145	+211		-155										
	+32.1	+18.8	+5.6	0	± 8.0	+38.5	+64.5	+64.5	3.8																
	+27.1	-28.7	-8.0	-6.4		+32.5																			
FB3										-600	-82	-19	0	±367	-683	+1232	+1232	8.21		39240	32054	1366.4	1115.5	10.83	13.25
										-494	+645	+211	+303		-593										
	+49.7	+36.7	+11.0	+8.1	—	+59.6	+105.5	+105.5	5.0																
	+44.7					+53.6																			
FB4										-1367	-274	-82	-87	± 48	-1640	-1858	-1858	12.400	2-2'-6"x⅝" bb ℄ 7/16" WEB 2-6"x6"x⅜" ℄, 17/16"x1⅛" CR.	72148	58287	1917.6	1549.2	11.84	14.40
										-1126	+797	+199	+276		-1351										
	+68.5	+52.2	+14.5	+15.1	—	+82.2	+150.3	+150.3	4.7																
	+83.5					+76.2																			
FB5										-2368	-536	-215	-351	—	-2842	-3792	-3792	25280	2-0 3/8"x⅝" bb ℄ 7/16" WEB 2-6"x6"x3/4" ℄, 2-17/16"x1⅛" CR.	163391	133631	3330.2	2772.3	13.67	16.71
										-2054	+437	+109	+130		-2465										
	+120.9	+64.3	+11.1	+20.9	—	+185.1	+222.2	+222.2	5.3																
	+115.9					+159.1																			
LLS										-2467	-898	-224	-368	—	-2960	-3957	-3957	26.38	2-0 7/16" bb ℄ 7/16" WEB 2-6"x6"x3/4" ℄, 2-17/16"x1⅛" CR.	163862	134041	3333.5	2726.8	14.24	17.41
										-2148	+401	+100	+120		-2578										
	+126.1	+52.3	+13.1	+13.3	—	+154.3	+204.8	+204.8	6.5																
	+121.1	-9.9	-2.5			+145.3																			
℄ Trun										-3578	-142	-45	0	—	-4894	-3763	-4294	29.627	4-0 3/4" bb ℄ 7/16" WEB 2-6"x6"x⅜" ℄, 2-17/16"x1⅛" CR, 1-5/8"x16" CR.	188865	156571	3806.3	3156.7	13.53	16.42
										-3214	0	0	0	—	-3857										
	-39.2	-39.5	-11.9	—	—	-407.4	-390.8	-407.4	6.5																
CG1										2235	—	—	—	—	2682	—	2682		3-0 3/4"x16 7/16" WEB 2-6"x6"x3/4" ℄ 2-17/16"x1⅛" CR.	75175	63075	2295.4	1925.9	14.05	16.72
	-12.40	—	—	—	—	-14.4	-12.4	-14.4	5.3																
CG2										—	—	—	—	—	—	—	—	—	3-0 3/4"x16 7/16" WEB 2-6"x6"x3/4" ℄ 2-17/16"x1⅛" CR.	51373	42671	1600.8	1336.1	—	—

STRESSES IN BEAMS, GIRDERS AND STRINGERS

S1	0.9	18.5	5.0	—	—	1.1	22.4	22.4	4.8	3.5	47.9	14.3	—	—	4.2	65.6	65.6	43.7	16 WF 36	446.3	—	56.3	—	14.0	14.0
S2	1.8	18.0	4.8	—	—	2.2	22.8	22.8	4.8	6.1	42.4	12.7	—	—	7.3	61.2	61.2	40.8	16 WF 36	446.3	—	56.3	—	13.1	13.1
FB1-4	6.9	43.8	13.1	—	—	8.3	63.8	63.8	4.1	30.6	271.7	81.6	—	—	80.8	403.8	403.8	270	27 WF 114	4080	—	299	—	18.2	18.2
FB5	46.7	39.3	11.9	—	—	56.1	57.7	97.7	2.7	258	287.5	86.3	—	—	310	631.8	631.8	428	2-0 3/4"x16 7/16" WEB 2-6"x6"x3/4" ℄, 3/4" CR.	61064	49934	1057	808	7.2	9.4
CG1	216.0	48.2	13.1	—	—	259.2	274.3	274.3	6.3	1293	306.2	69.8	—	—	1553	1691	1691	1127	2-0 3/4"x16 7/16" WEB 2-6"x6"x3/4" ℄, 3/4" CR.	104908	88002	2080.7	1745.0	9.8	11.7
CG2	129.6	—	—	—	—	155.4	—	155.4	—	97.1	—	—	—	—	1164	—	1164	777	2-0" bb ℄, 3/8" WEB 2-6"x3½"x1/2", 3/4" CR.	294332	245668	936	780	15.0	17.92
Trun Girder	85.6	9.4	2.7	—	—	103.0	97.7	103.0	4.02	34.7	37.7	10.8	—	—	41.6	39.6	41.6	27.7	2-0" bb ℄, 3/8" WEB 2-6"x3½"x1/2", 3/4" CR.	254802	233201	773	707	6.5	7.1

ESTIMATED QUANTITIES

ITEM	UNIT	QUANTITY
Structural Steel (Bascule Leaf)	Lump Sum	*
Steel Roadway Floor (5" Deep, Armored)	Sq. Ft.	1788
Steel Roadway Floor (3" Deep, Armored)	Sq. Ft.	385
Steel Sidewalk Floor (1¼" Deep)	Sq. Ft.	525

*Approx. 182,000 lbs; this does not include Structural Steel in Trunnion Pier.

NOTES

1. For General Notes see Sheet No. B-1.
2. If span is erected in closed position, counterweight shall be supported on falsework during pouring of concrete counterweight. If span is erected in open position, girder CG2 shall be supported by falsework at ℄ and ¼ points during pouring of counterweight.
3. All rivets shall be ⅞ ø
4. Reactions given are for one Girder.
5. Counterweight details shall be furnished with the Shop Plans. Provisions shall be made for movable blocks equal to 3½% under and 5% over the calculated weight. Blocks equal to 5% of the calculated weight shall be provided.
6. General reaming will be required for the Main Girders, Trunnion Girders, lateral girder at FB-5 and the Cwh Girders. See Art. 520.11(a) of the Specifications.
7. For rivets passing through fills, See Art. 1.6.33 of the A.A.S.H.O. Specifications. All fills must be solid; rings not permitted.
8. WELDING: American Welding Society. Latest Edition.
9. STRUCTURAL STEEL: Structural steel for stringers, Floor Beams FB-1, FB-2 & FB-3, flanges and web of Floor Beam FB-4, flanges and web of Counterweight Girders, CG-1 and CG-2 and flanges and web of Main Girders shall conform to A.S.T.M. Specification A-36. All other steel shall be A.S.T.M. Specification A-36, A-373 or A-7.

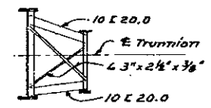

SECTION X-X

STRUCTURE A

BASCULE SPAN - FRAMING PLAN, GIRDER GEOMETRY AND STRESS SHEET

STATE ROAD DEPARTMENT OF FLORIDA
BRIDGE DIVISION

BRIDGES BETWEEN ESTERO ISLAND AND BONITA BEACH

REVISIONS Dates	Descriptions
1-64	Brace Ls-Framing Plan

ROAD NO.	COUNTY	PROJECT NO.
S-865	LEE	12530-3153

	Names	Dates
Detailed by	W.M.G.	1-61
Checked by	J.L.B.	1-61
Quantities by	B.G.C.	8-58
Checked by	J.E.S.	9-58
Traced by	G.C.L.	7-57

APPROVED BY _____ Assistant State Highway Engineer

Drawing No. 43 of 60 | Index No. 7700

BX1-56

BX1-56

BX1-57

BX1-57

EB-31

FED. ROAD DIV. NO.	STATE	PROJECT NO.	FISCAL YEAR	SHEET NO.
3	FLA	12530-3153	63	D-45

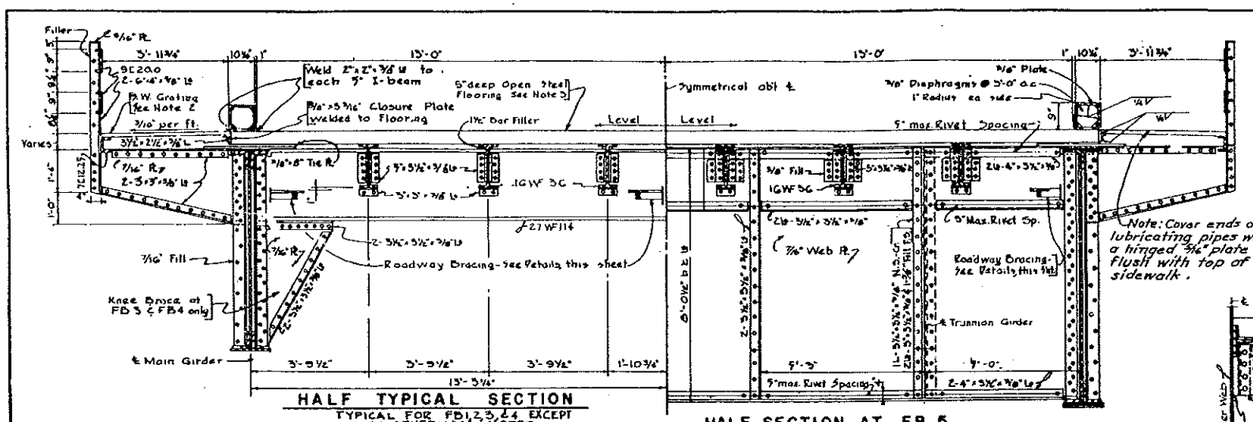

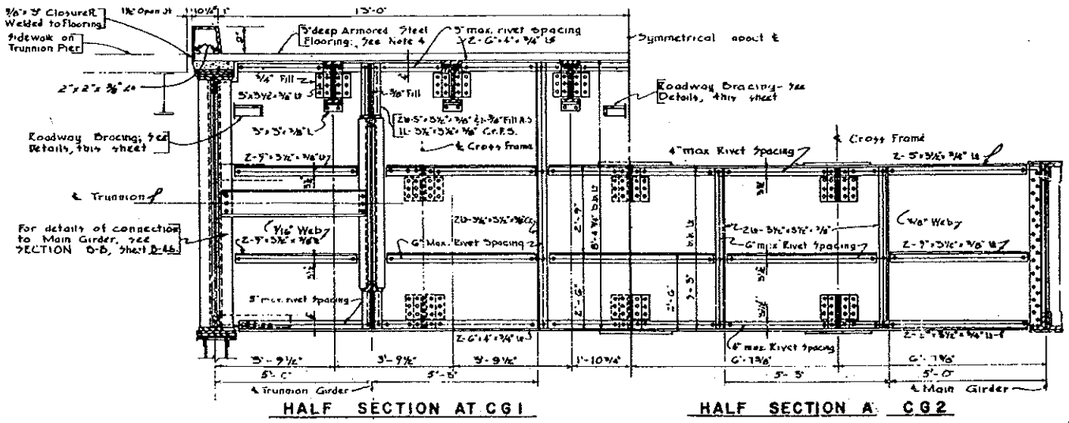

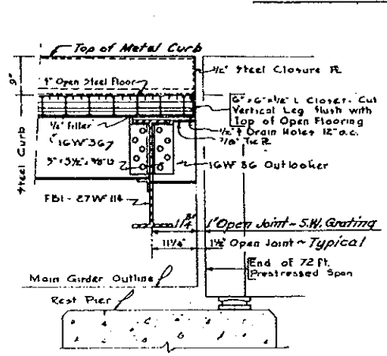

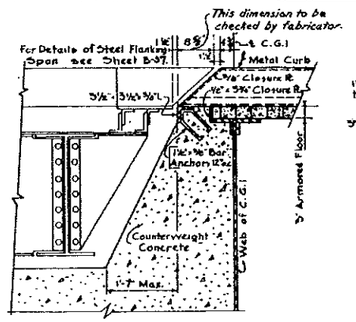

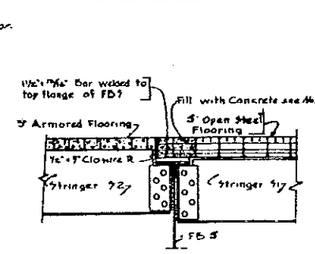

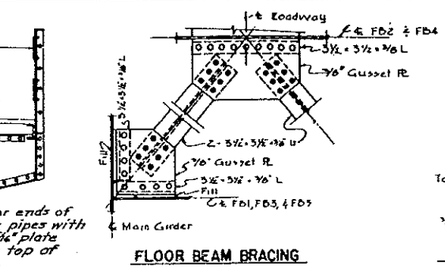

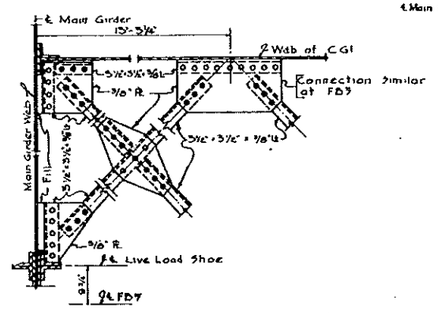

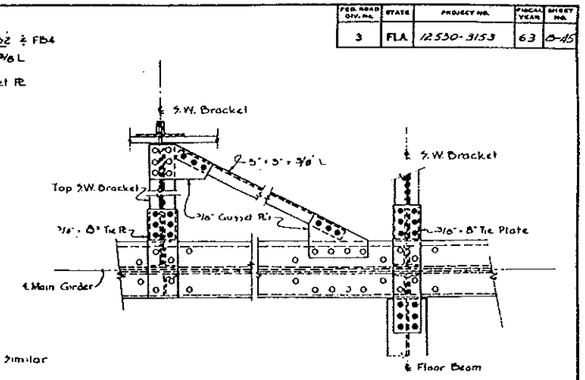

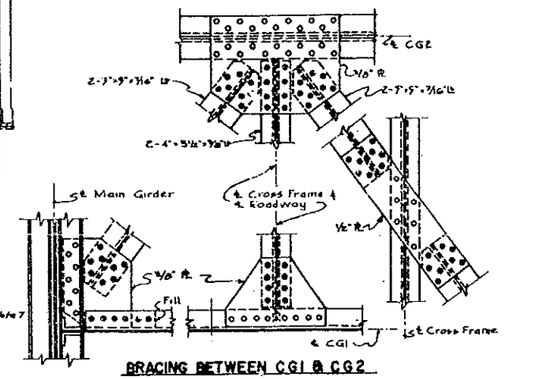

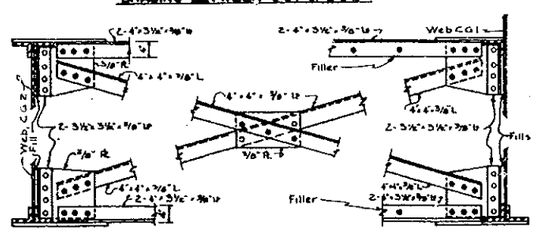

NOTES:

1. For General Notes, see Sheet No. D-1.
2. Sidewalk Grating shall be constructed with 1⅛"x⅜" bearing bars at not more than 1⅞" o.c.; secondary bars shall form rectangular, reticuline or U-shaped openings. Maximum clear size of any opening shall not exceed ⅜"x5".
3. 5" deep open steel deck shall be welded to stringers and bars in accordance with manufacturer's specifications.
4. Cost of Concrete in 5" deep Armored Steel Flooring shall be included in the Contract Lump Sum Price for Steel Roadway Floor (5" deep-Armored).
5. All steel shall be included in Contract Lump Sum Price for Structural Steel (Bascule Leaf), except steel Flooring.
6. The use of ring fillers will not be permitted. All fillers shall be solid.
7. Cost of Concrete in 5" deep open steel deck over FB-5 shall be included in the Contract Lump Sum Price for Steel Roadway Floor.
8. Steel Roadway Floor shall have structural properties and riding properties equivalent to I-Beam L&R Flooring as manufactured by the Carnegie Steel Corp., Pittsburg, Pa.
9. Paint: See General Notes on Sheet No. B-1.

STRUCTURE A

BASCULE SPAN
SECTIONS AND BRACING

STATE ROAD DEPARTMENT OF FLORIDA
BRIDGE DIVISION

BRIDGES BETWEEN ESTERO ISLAND AND BONITA BEACH

REVISIONS		ROAD NO.	COUNTY		PROJECT NO.
Date	Description	S-865	LEE		12530-3153
			Name	Date	APPROVED BY
		Checked by	J.E.S.	7-57	
		Checked by	L.H.K.	8-57	
		Quantities by	B.A.C.	8-58	
		Checked by	J.E.S.	8-58	
		Traced by	J.E.S.	7-57	Sheet No. 44 of 60 — Index No. 7700

BX1-57

BX1-57

BX1-58

BX1-58

EB-32

FED. ROAD DIST. NO.	STATE	PROJECT NO.	FISCAL YEAR	SHEET NO.
3	FLA.	12530-3153	63	B-46

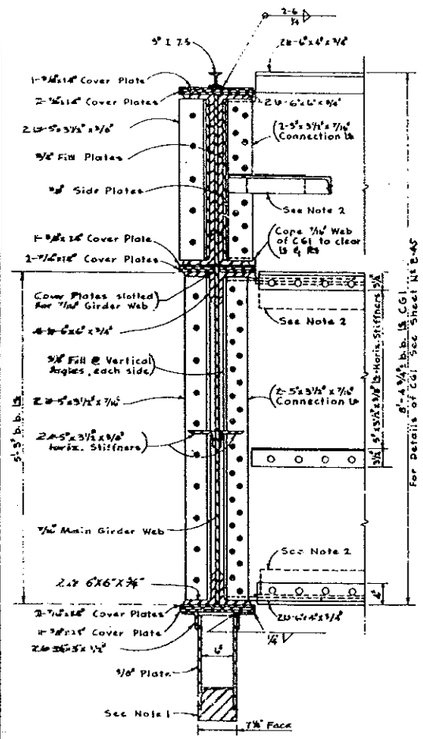

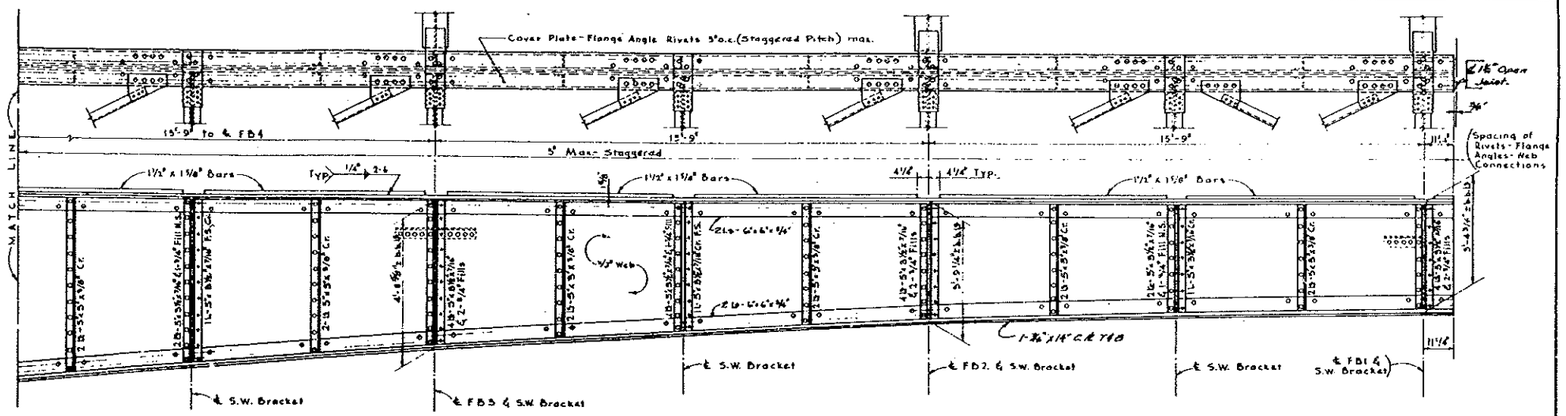

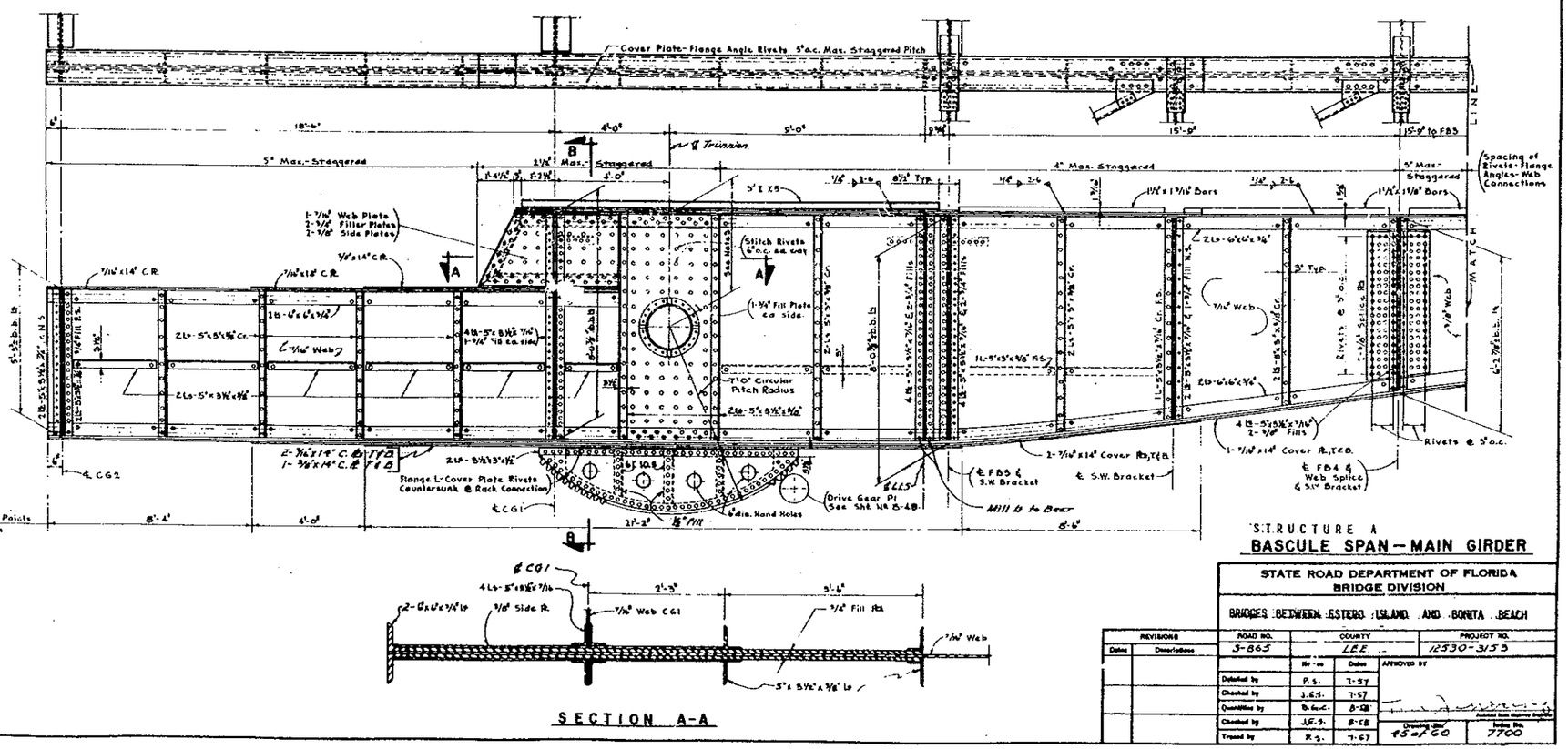

STRUCTURE A

BASCULE SPAN — MAIN GIRDER

NOTES

1. All parts of rack shall be structural steel except tooth section, which shall be Cast Steel.
2. For Details of Bracing between CG1 & CG2 and between CG1 and FB5, see Sheet No B-48.
3. This dimension to be set by Contractor see Special Provisions. These plans based on the assumption that this dimension equals 4'-0"
4. For details of Trunnion Collar, see Sheet B-50.
5. All steel in Rack and Trunnion Collar shall be included in the Contract Lump Sum Price for Machinery and Castings. All other steel shall be included in Contract Lump Sum Price for Structural Steel (Bascule Leaf)
6. Rivets shall be countersunk as required to provide smooth bearing for Live Load Shoes, etc.
7. For General Notes see Sheet No. B-1.

STATE ROAD DEPARTMENT OF FLORIDA
BRIDGE DIVISION

BRIDGES BETWEEN ESTERO ISLAND AND BONITA BEACH

REVISIONS		ROAD NO.	COUNTY		PROJECT NO.
Date	Description	S-865	LEE		12530-3153
			Name	Date	APPROVED BY
		Detailed by	R.S.	7-57	
		Checked by	J.E.S.	7-57	
		Quantities by	B.G.C.	8-58	
		Checked by	J.E.S.	8-58	
		Traced by	R.S.	7-67	

Drawing No. 45-A-60 | Index No. 7700

BX1-59

BX1-59

EB-33

FED. ROAD DIV. NO.	STATE	PROJECT NO.	FISCAL YEAR	SHEET NO.
3	FLA.	12530-3153	63	B-47

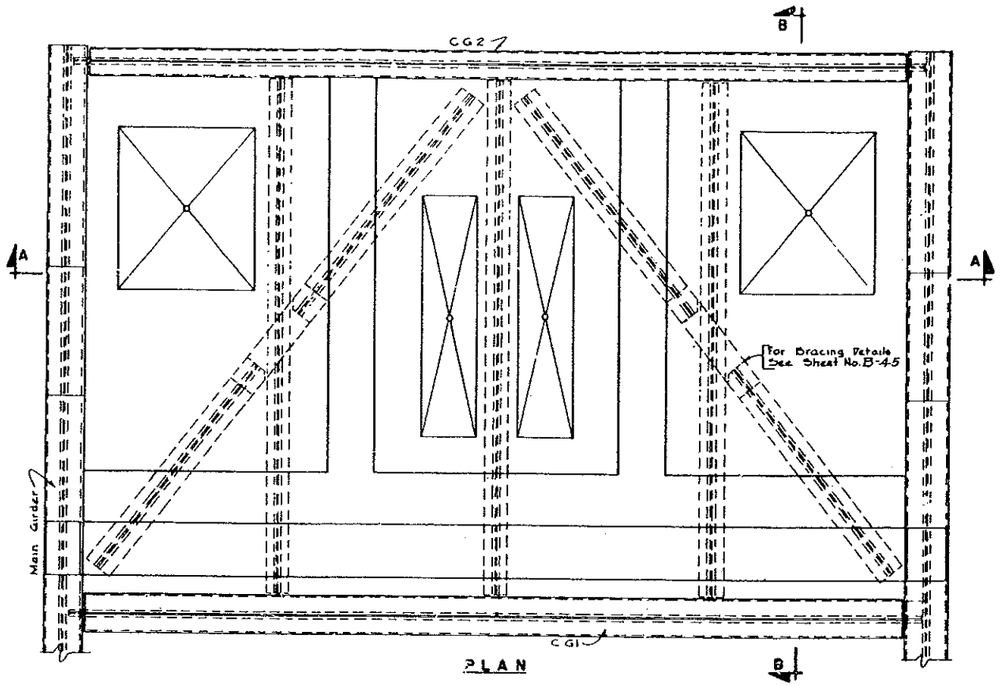

PLAN

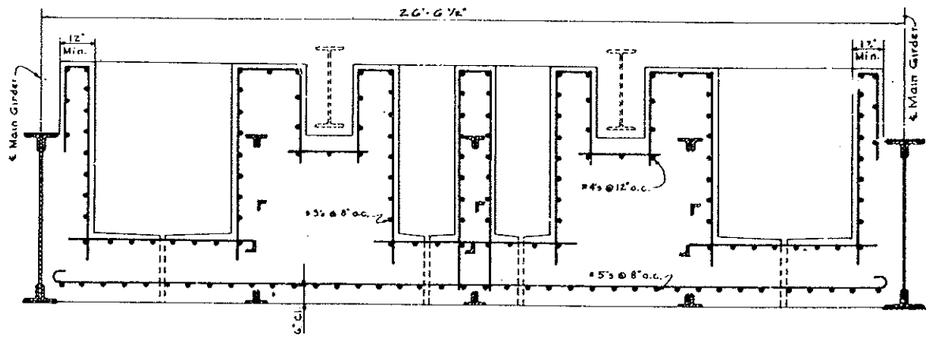

SECTION A-A

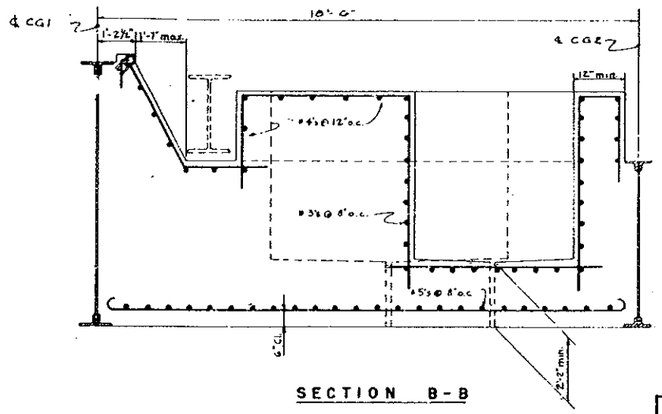

SECTION B-B

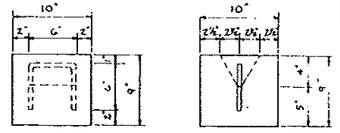

COUNTERWEIGHT BLOCK

Weight of one Block : 72 #

Blocks equal to 5 % of the calculated counterweight shall be provided. (370 ± Required)

ESTIMATED QUANTITIES

ITEM	UNIT	QUANTITY
*Class 'A' Concrete (Counterweight)	Cu. Yd.	115
Reinforcing Steel	Lb.	2,800

*146 lb. per cu. ft.

NOTES:

1. For General Notes, see Sheet B-1.
2. All reinforcing shall have 3" cover unless otherwise noted.
3. Reinforcing: #5 bars at the bottom.
   #4 bars at the top.
   #3 bars at pockets.
4. Counterweight dimensions and center of gravity shall be checked by the Contractor using weight determined from approved shop plans. (See Section 330.6, Standard Specifications).
5. The Contractor shall be responsible for final balancing of the leaf. (See Section 330.6, Standard Specs.).
6. This sheet is intended as a guide only, and is not to scale. Contractor will be required to submit shop drawings showing details of counterweight, and shall submit calculations showing balance of leaf. See Section 330.6 of the Standard Specifications.

STRUCTURE A

COUNTERWEIGHT - GENERAL DETAILS

STATE ROAD DEPARTMENT OF FLORIDA
BRIDGE DIVISION

BRIDGES BETWEEN ESTERO ISLAND AND BONITA BEACH

REVISIONS Date	Description	ROAD NO.	COUNTY	PROJECT NO.
		S-865	LEE	12530-3153

	Names	Dates	APPROVED BY
Detailed by	E.A.H.	7-57	
Checked by	J.E.S.	7-57	
Quantities by	L.V.C.	8-58	
Checked by	B.B.C.	9-58	
Traced by	E.A.H.	7-57	

Assistant State Highway Engineer

Drawing No. 46 of 60

Index No. 7700

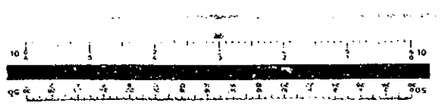

BX1-59

BX1-59

BX1-60

BX1-60

EB-34

FED. ROAD DIV. NO.	STATE	PROJECT NO.	FISCAL YEAR	SHEET NO.
3	FLA.	12530-3153	63	B-48

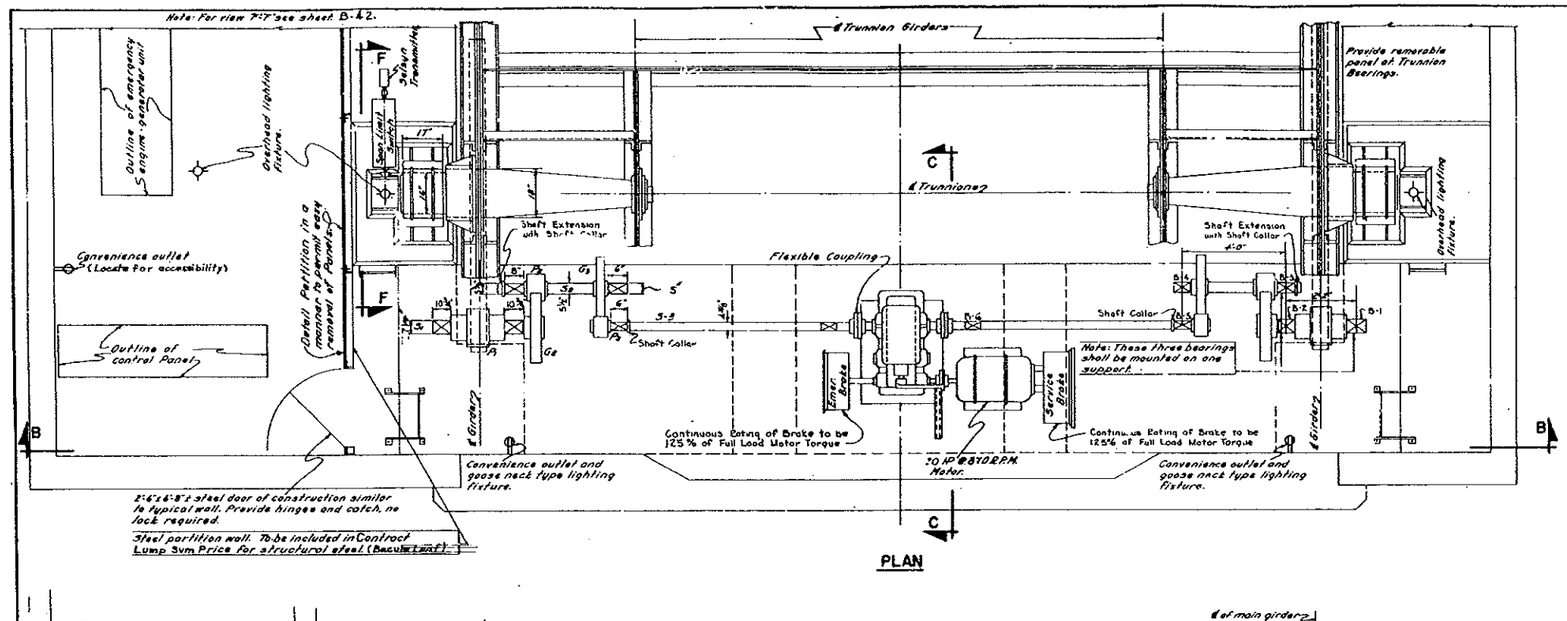

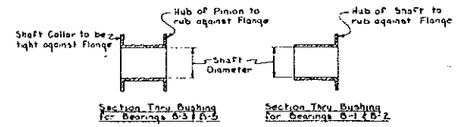

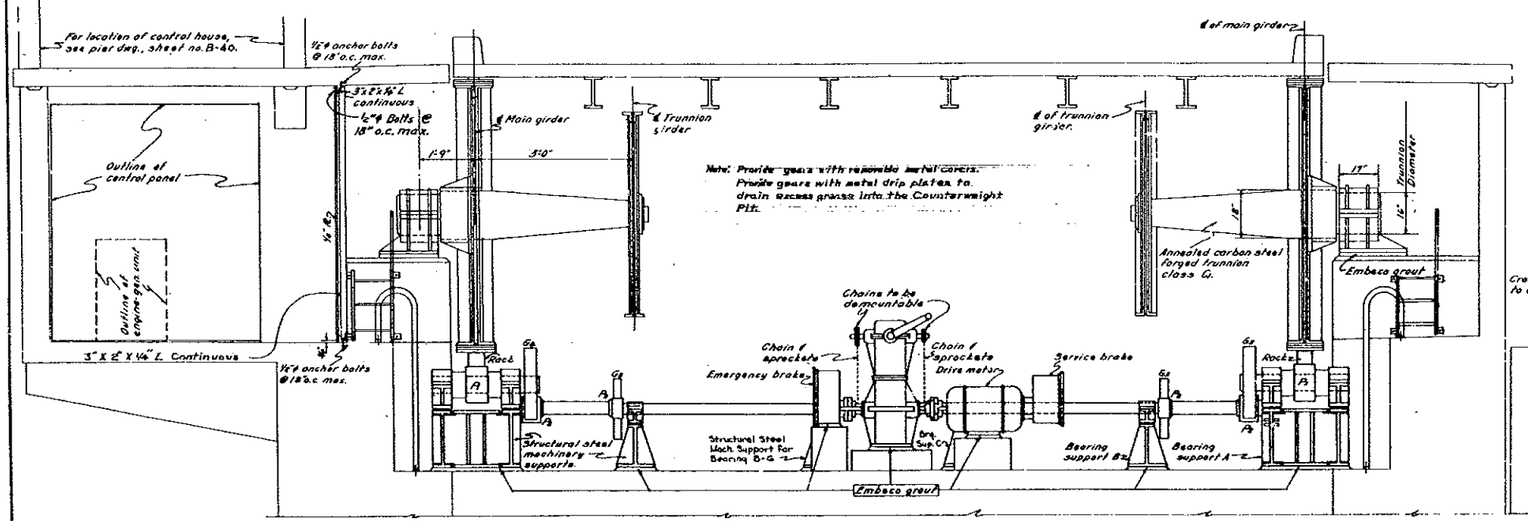

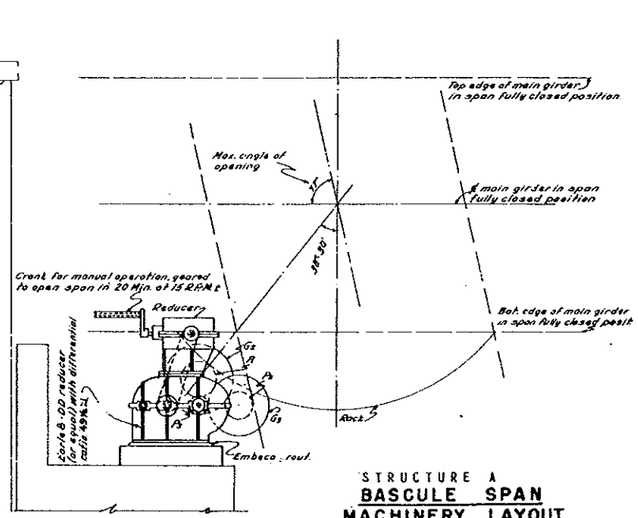

TABLE OF GEARS

MARK	NO. REQ.	PITCH	NO. OF TEETH	PITCH DIAM.	FACE	MIN. HUB	BORE	KEY	MAT'L.	TEETH
Rack	2	3½ C.P.	——	160"	7¼"	——	——	——	C.S.	20° Inv.
P-1	2	3½ C.P.	14	15.597"	10¼"	Integral with G-1			F.S.	20° Inv.
G-2	2	1¼ D.P.	41	32.80"	5¼"	9¼"	7½"	2-1⅜x1⅜	C.S.	20° Inv.
P-2	2	1¼ D.P.	15	12.0"		8¼"	5½"	1-1⅜x1⅜	F.S.	20° Inv.
G-3	2	1¼ D.P.	46	24.286"	4"	8¼"	5½"	2-1⅜x1⅜	C.S.	20° Inv.
P-3	2	1¼ D.P.	15	3.571"	5"	7"	4⅝"	1-1¼"	F.S.	20° Inv.

SECTION B-B

SECTION C-C

-NOTES-

BUSHINGS: Bushings for lower half of trunnion bearings shall be Alloy "A" Bronze. Bushings for shafts S1, S2, & S3 shall be Alloy "C" Bronze. All other bearings shall be of babbit.

MACHINERY LAYOUT: This drawing is intended as a general machinery layout only and does not show all details, see Article 330.4 of Standard Specifications for Road and Bridge Construction.

MACHINERY SUPPORTS: Machinery supports shall be structural steel and the cost shall be included in the Contract Lump Sum Price for structural steel. (Bascule span).

LEAF POSITION INDICATORS: Synchronous leaf position indicators shall be provided (2 in Working Control).

SPECIFICATIONS: AASHO Standard Specifications for Movable Highway Bridges.

RACK: All teeth shall be Cut.

STRUCTURE A

BASCULE SPAN MACHINERY LAYOUT

STATE ROAD DEPARTMENT OF FLORIDA
BRIDGE DIVISION

BRIDGES BETWEEN ESTERO ISLAND AND BONITA BEACH

REVISIONS		ROAD NO.	COUNTY		PROJECT NO.
Dates	Descriptions	S-865	LEE		12530-3153
6-28	Rack teeth note		Names	Dates	APPROVED BY
		Detailed by	Gt.C.L.	11-87	
		Checked by	L.H.S.	11-87	
		Quantities by			
		Checked by			
		Traced by	Gt.C.L.	11-87	

Drawing No. 47 of 60 | Index No. 7700

BX1-60

BX1-60

BX1-61

BX1-61

EB-35

FED. ROAD DIV. NO.	STATE	PROJECT NO.	FISCAL YEAR	SHEET NO.
3	FLA.	12530-3153	63	B-49

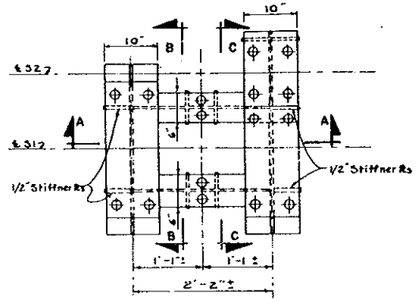

PLAN

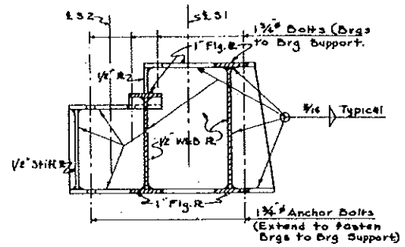

SECTION C-C

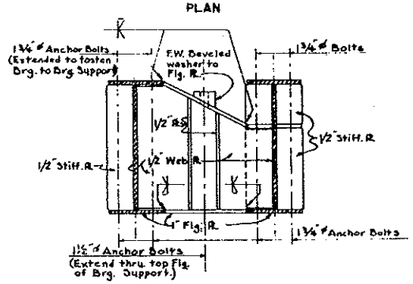

SECTION A-A.

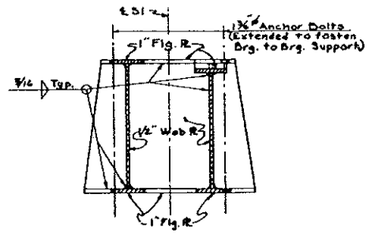

SECTION B-B

BEARING SUPPORT "A"

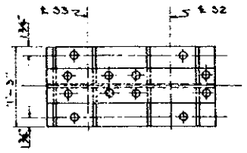

PLAN

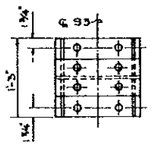

PLAN

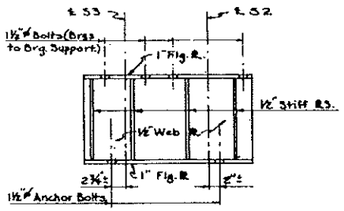

ELEVATION

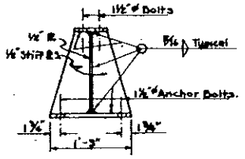

END VIEW

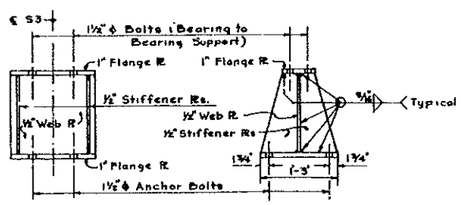

ELEVATION

END VIEW

BEARING SUPPORT "B"

BEARING SUPPORT "C"

STRUCTURE A

BASCULE SPAN-MACHINERY SUPPORTS

STATE ROAD DEPARTMENT OF FLORIDA
BRIDGE DIVISION

BRIDGES BETWEEN ESTERO ISLAND AND BONITA BEACH

REVISIONS		ROAD NO.	COUNTY		PROJECT NO.
Date	Descriptions	S-865	LEE		12530-3155
			Name	Date	APPROVED BY
		Detailed by	S.F.J.	9-67	
		Checked by	L.H.S.	10-67	
		Quantities by			
		Checked by			
		Traced by	S.F.J.	9-67	

Computer Sheet No. 48 of 60 — Index No. 7700

BX1-61

BX1-61

BX1-62

BX1-62

EB-36

FED. ROAD DIV. NO.	STATE	PROJECT NO.	FISCAL YEAR	SHEET NO.
3	FLA.	12530-3153	63	B-50

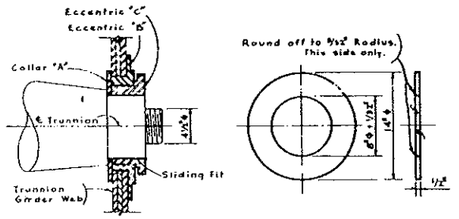

ECCENTRIC ASSEMBLY

COLLAR "A"

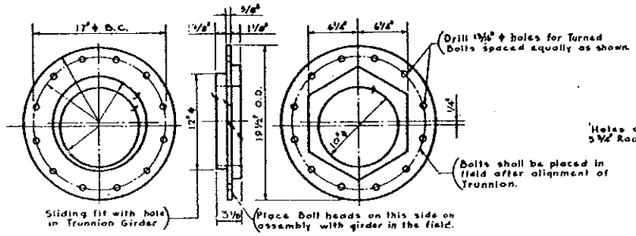

ECCENTRIC "B"

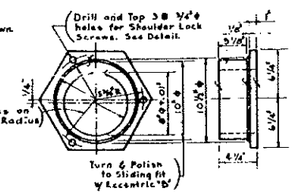

ECCENTRIC "C"

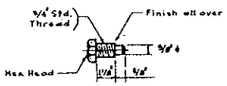

SHOULDER LOCK SCREW

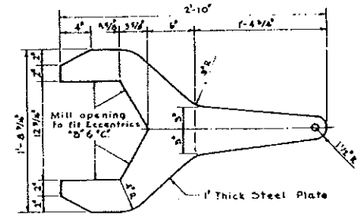

WRENCH FOR ECCENTRICS

DETAILS OF ECCENTRICS

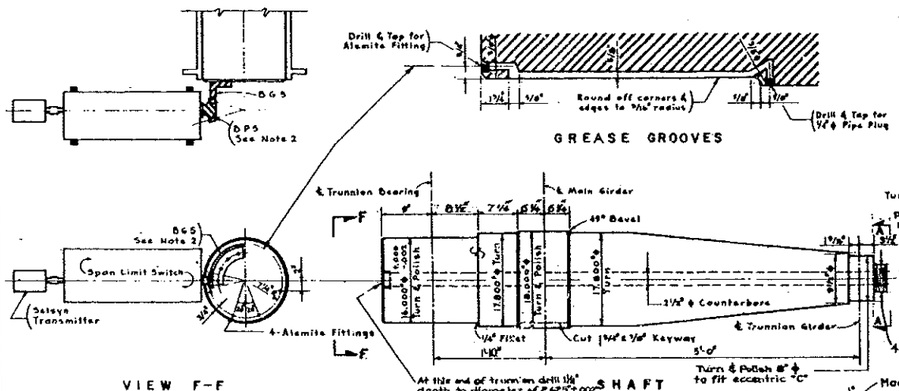

VIEW F-F
(SHOWING SPAN LIMIT SWITCH)

DETAILS OF TRUNNION SHAFT

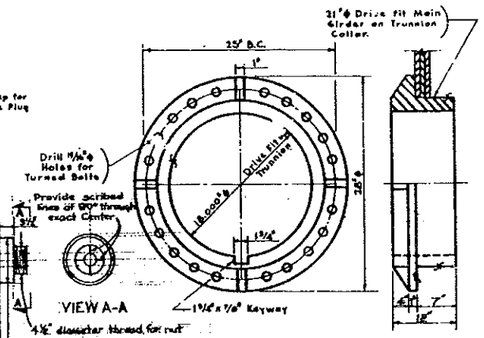

ALIGNING PLUG FOR TRUNNIONS
(Furn. X & Ship for use on each Bascule Project)

DETAIL OF TRUNNION COLLAR

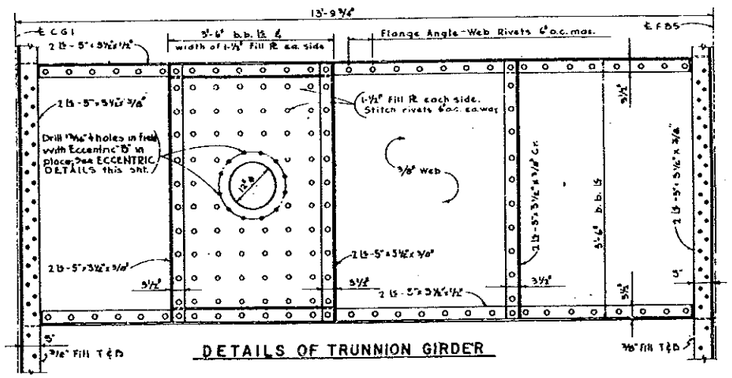

DETAILS OF TRUNNION GIRDER

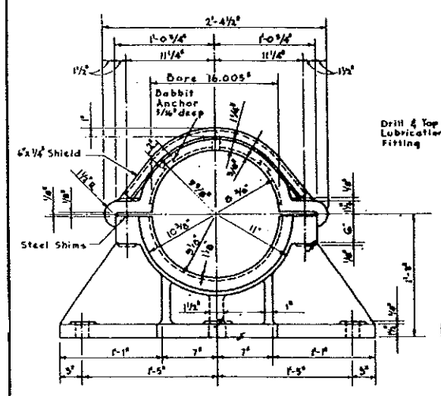

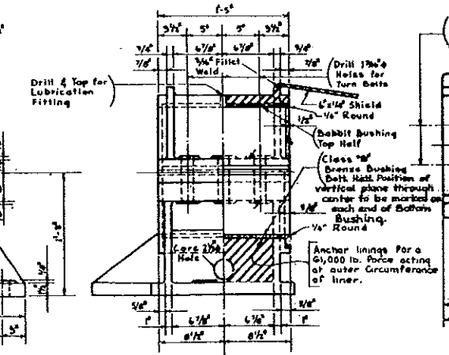

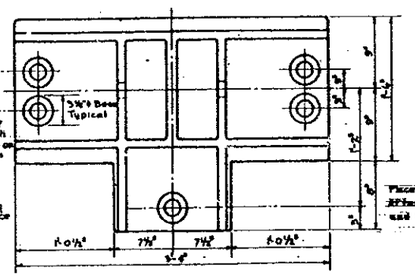

DETAILS OF TRUNNION BEARING

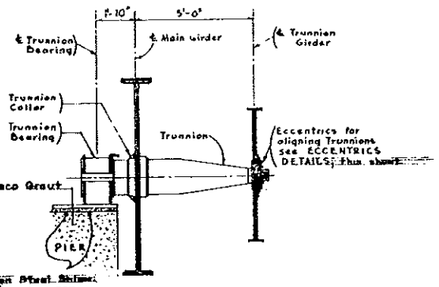

TRUNNION LAYOUT

NOTES

1. Eccentrics and Collar "A" shall be made of Structural Steel Steel; Trunnion Shaft shall be Annealed Carbon Steel, Forged, Class C1; Trunnion Bearing and Trunnion Collar shall be Cast Steel.
2. B.P.-5 17 Tooth, 5 D.P., 9.4" Pitch Diameter Pinion.
B.G.-5 21 Tooth (In Full Circle), 5 D.P. 14.2" Pitch Diameter Rack.
3. For General Notes, see Sheet B-1.
4. Steel in Trunnion Girder shall be included in the Contract Lump Sum Price under Item No. 320-2 Structural Steel (Bascule Leaf). All other metal shall be included in Contract Lump Sum Price under Item No. 320-4 Machinery and Castings.

STRUCTURE A
BASCULE SPAN
TRUNNION AND RELATED DETAILS

STATE ROAD DEPARTMENT OF FLORIDA
BRIDGE DIVISION

BRIDGES BETWEEN ESTERO ISLAND AND BONITA BEACH

REVISIONS		ROAD NO.	COUNTY	PROJECT NO.
Dates	Descriptions	S-865	LEE	12530-3153

	Names	Dates
Detailed by	J.E.S.	8-57
Checked by	L.H.S	8-57
Quantities by	R.G.Z	8-58
Checked by	J.E.S.	8-58
Traced by	J.E.S.	8-57

APPROVED BY
Assistant State Highway Engineer
Drawing No. 49 of 60
Index No. 7700

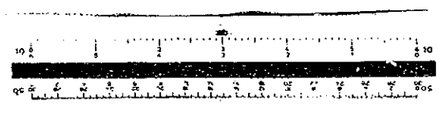

BX1-62

BX1-62

BX1-63

BX1-63

EB-37

FED. ROAD DIST. NO.	STATE	PROJECT NO.	FISCAL YEAR	SHEET NO.
3	FLA.	12530-3153	63	B-51

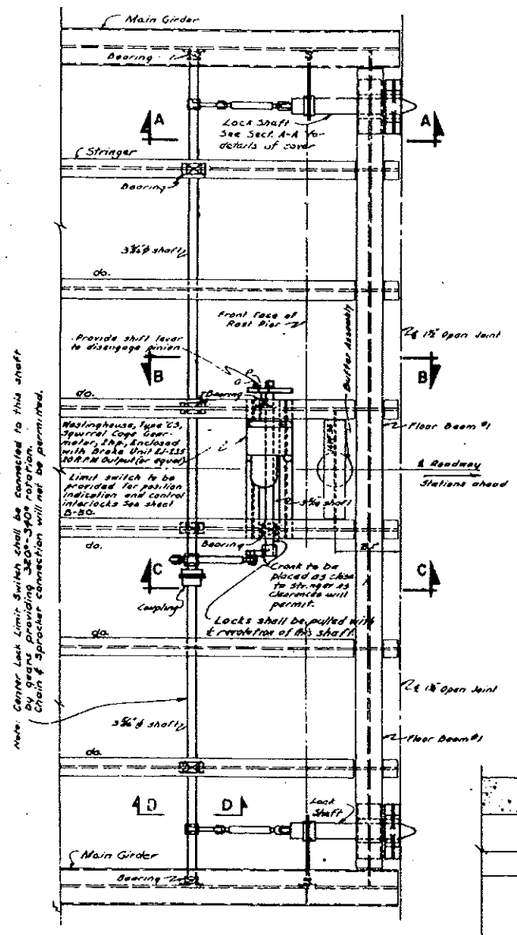

PLAN OF LOCK ASSEMBLY

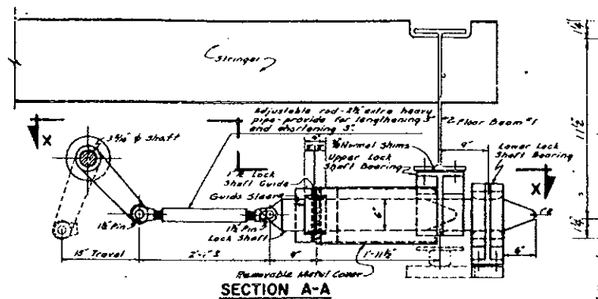

SECTION A-A

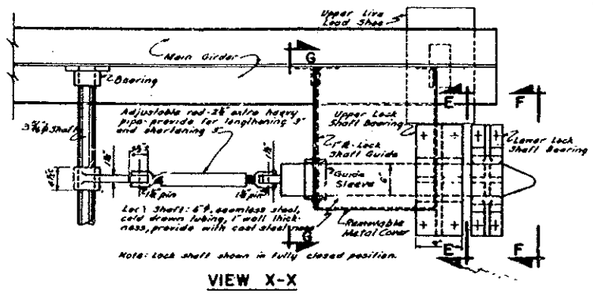

VIEW X-X

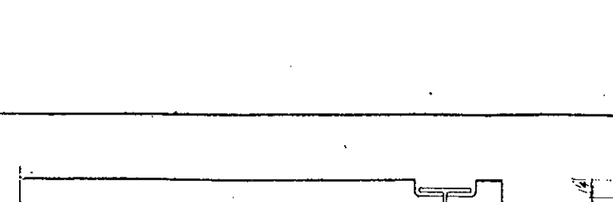

SECTION C-C

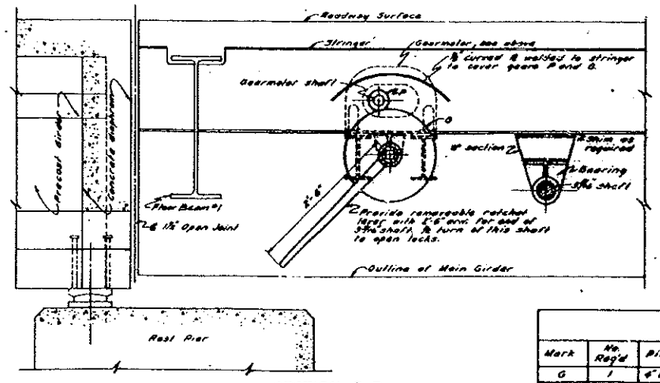

SECTION B-B

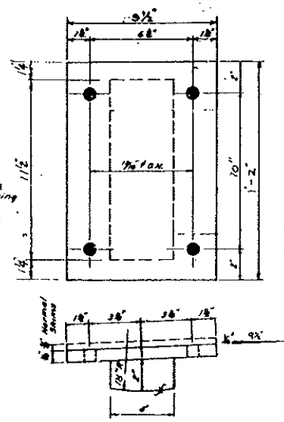

UPPER LIVE LOAD SHOE AT TRUNNION END

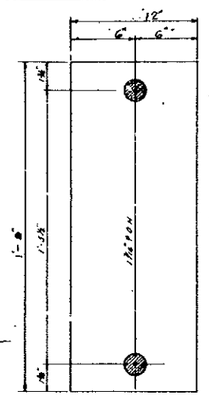



LOWER LIVE LOAD SHOE AT TRUNNION END

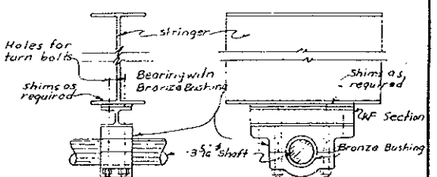

SIDE VIEW SECTION E-E

MAIN SHAFT BEARING DETAILS

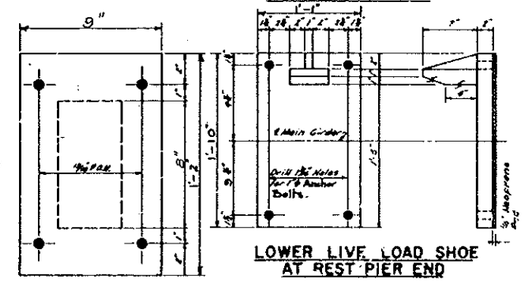

LOWER LIVE LOAD SHOE AT REST PIER END

UPPER LIVE LOAD SHOE AT REST PIER END

ANCHOR BOLT LAYOUT LOWER LIVE LOAD SHOE & LOWER LOCK SHAFT BEARING

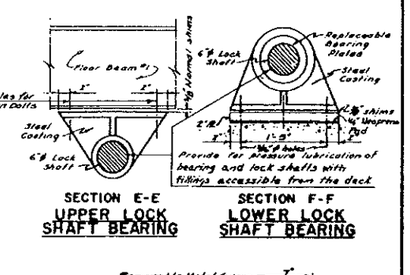

SECTION E-E UPPER LOCK SHAFT BEARING

SECTION F-F LOWER LOCK SHAFT BEARING

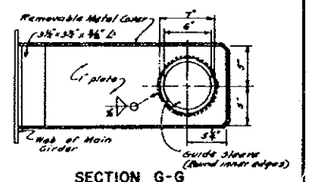

SECTION G-G

NOTES

1. For General Notes see sheet B-1.
2. Provisions shall be made for lubricating, from the Bridge Deck, all moving parts of the lock mechanism. Lubricating fittings for these parts shall be placed on the upper ends of shaft pipes connected to the parts and to the lower side of the Sidewalk Floor Beams of Deck.
3. Live Load Shoes and Lower Lock Shaft Bearing-Masonry Plate shall be fabricated from Structural Steel.
4. Cover ends of 4" Conduit pipes with a hinged ¼" plate flush with top of Sidewalk.

TABLE OF GEARS

Mark	No. Req'd	Pitch	No. of Teeth	Pitch Diam.	Face	Hub	Bore	Key	Mat'l	Teeth
G	1	6" D.P.	78	13.000"	2⅛"	2¾"	3¾"ϕ	⅞"x⅝"	S.S.	20° Inv.
D	1	6" D.P.	14	2.500"	2⅛"	2¾"	1⅞"	½"x⅜"	S.S.	20° Inv.

STRUCTURE A

LOCK ASSEMBLY AND LIVE LOAD SHOES

STATE ROAD DEPARTMENT OF FLORIDA
BRIDGE DIVISION

BRIDGES BETWEEN ESTERO ISLAND AND BONITA BEACH

REVISIONS Date	Description

ROAD NO.	COUNTY	PROJECT NO.
S-865	LEE	12530-3153

	Names	Dates
Detailed by	G.C.L.	10-62
Checked by	L.M.	11-62
Quantities by		
Checked by		
Traced by	G.C.L.	10-62

APPROVED BY: T. W. Jennings
Engineer of Bridges
Drawing No. 30 of 60
Price No. 7720

BX1-63

BX1-63

BX1-64

EB-38

FED. ROAD DIV. No.	STATE	PROJECT No.	FISCAL YEAR	SHEET No.
3	FLA	12530-3153	63	B-52

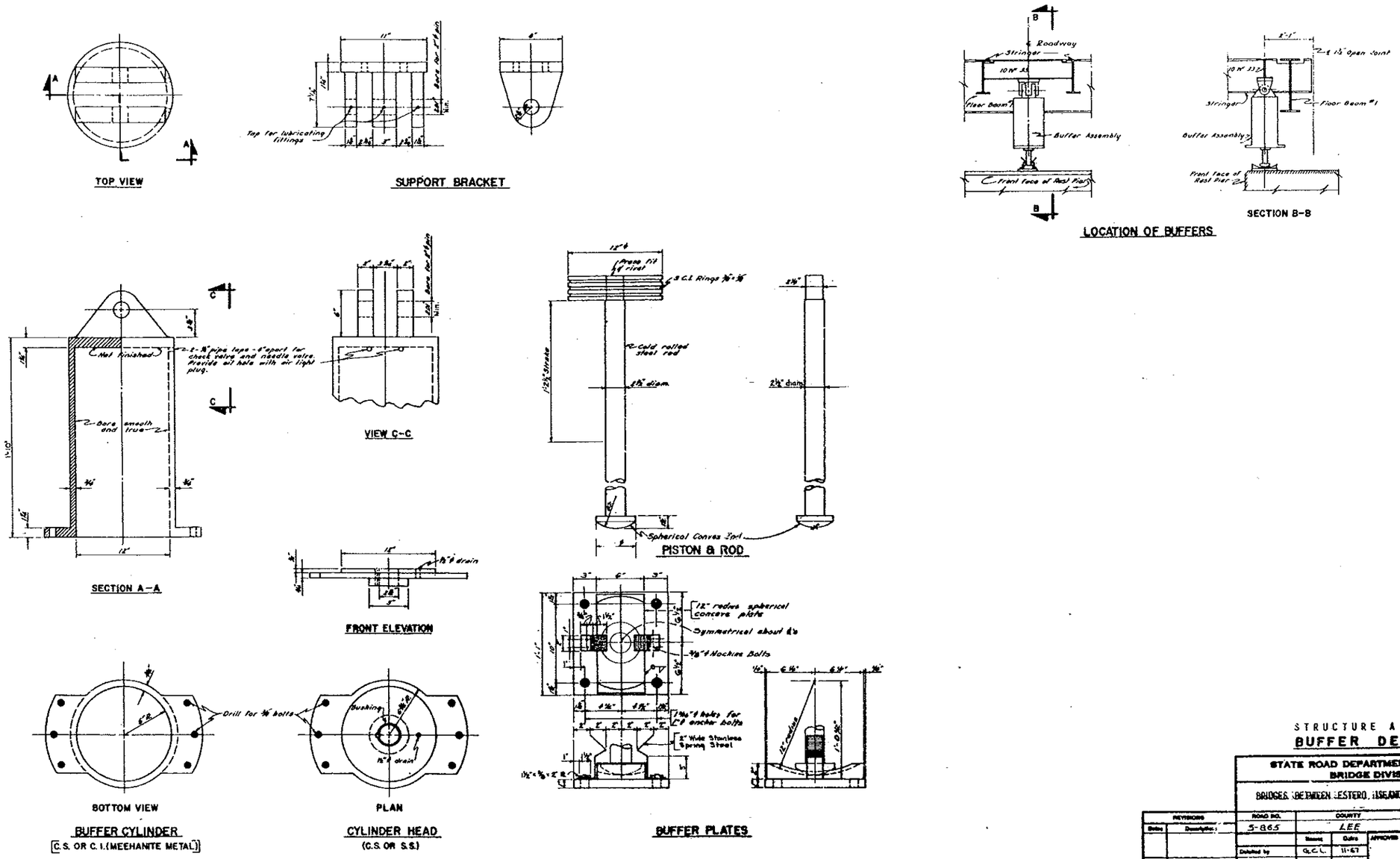

STRUCTURE A

BUFFER DETAILS

STATE ROAD DEPARTMENT OF FLORIDA
BRIDGE DIVISION

BRIDGES BETWEEN ESTERO ISLAND AND BONITA BEACH

REVISIONS		ROAD NO.	COUNTY		PROJECT NO.
Date	Description	5-865	LEE		12530-3153
			Name	Date	APPROVED BY
		Detailed by	G.C.L.	11-67	
		Checked by	L.H.	11-57	
		Quantities by			
		Checked by			
		Traced by	G.C.L.	11-57	Drawing No. 51 of 60 — Index No. 7700

BX1-64

BX1-65

BX1-65

EB-39

FED. ROAD DIV. NO.	STATE	PROJECT NO.	FISCAL YEAR	SHEET NO.
3	FLA.	12530-3153	63	B-53

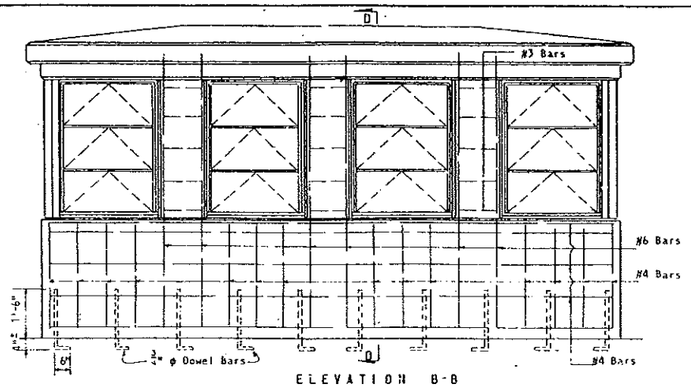

ELEVATION B-B

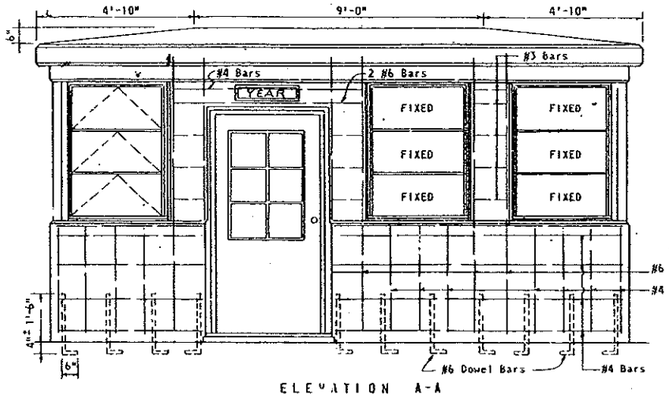

ELEVATION A-A

NOTE: Year of completion of Job shall be formed over the door as shown in 3" recessed figures set in panel ¾" deep.

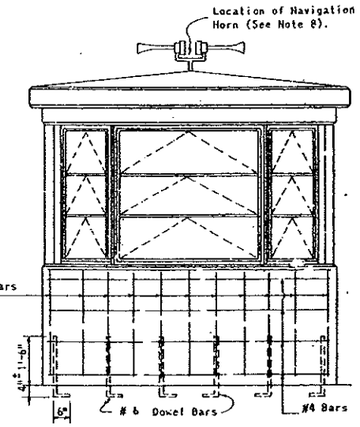

ELEVATION C-C

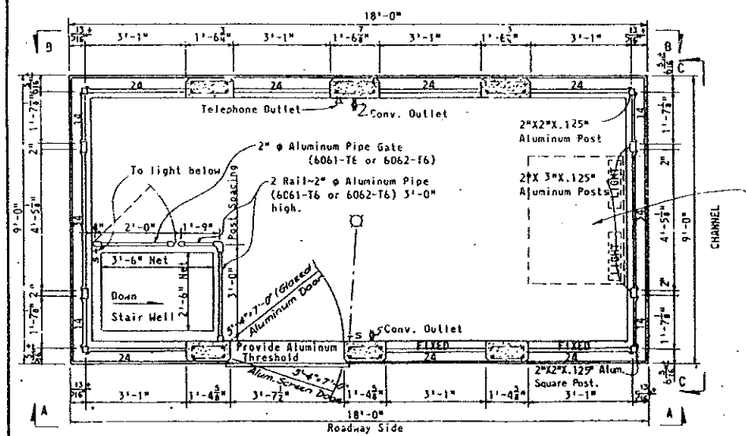

PLAN

Location of Control Desk unless otherwise directed by the Engineer.

NOTE: The Stair Well shall be equipped with Steel Stairs and Aluminum Hatch Cover complete with Alum... frame and handle. Provision shall be ma... for securely holding the Hatch Cover in the open position.

NOTE: Control House shall be constructed opposite hand to details shown on this sheet. See Sheet No. B-39.

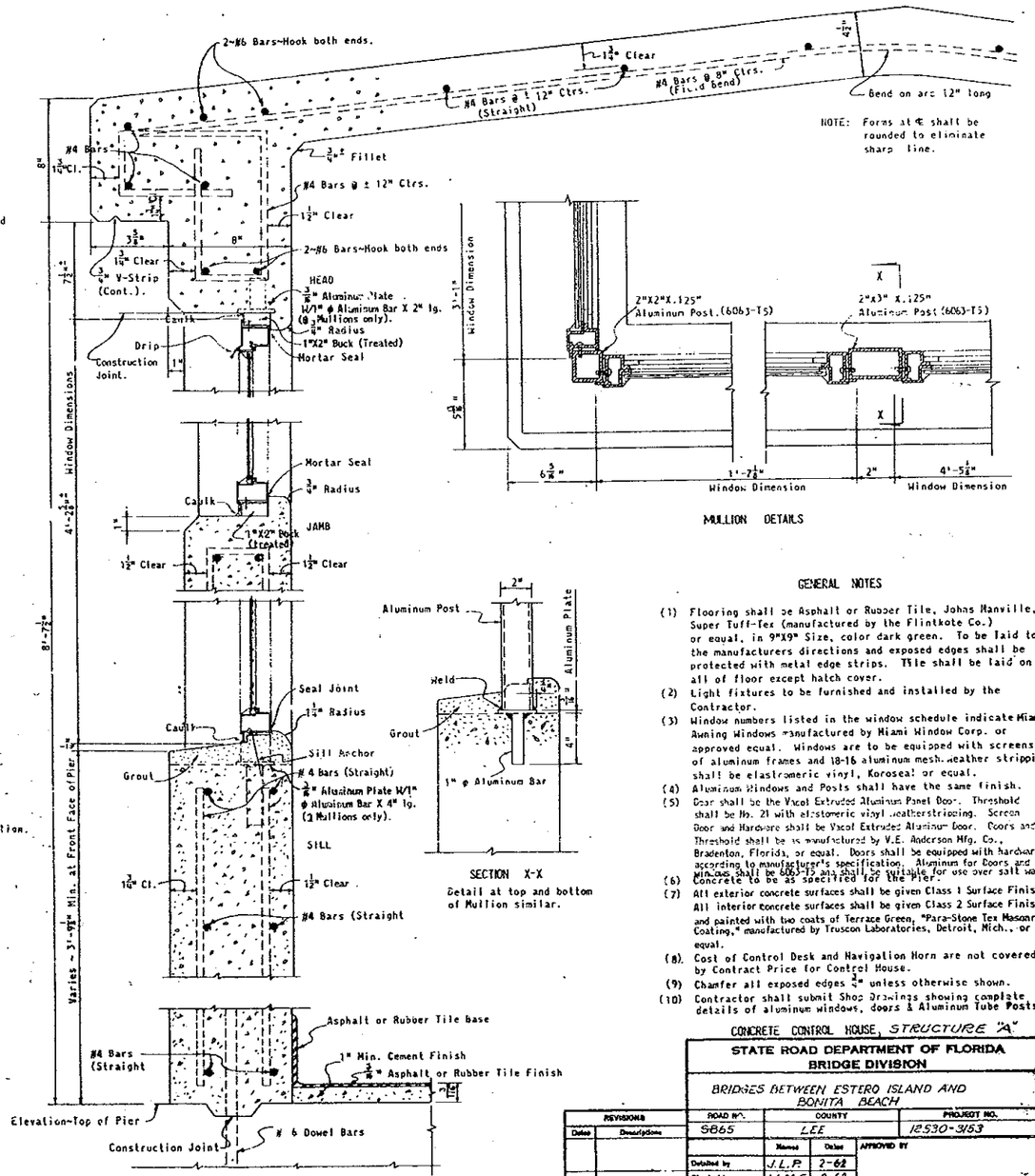

MULLION DETAILS

SECTION X-X

Detail at top and bottom of Mullion similar.

SECTION D-D

GENERAL NOTES

(1) Flooring shall be Asphalt or Rubber Tile, Johns Manville, Super Tuff-Tex (manufactured by the Flintkote Co.) or equal, in 9"X9" Size, color dark green. To be laid to the manufacturers directions and exposed edges shall be protected with metal edge strips. Tile shall be laid on all of floor except hatch cover.

(2) Light fixtures to be furnished and installed by the Contractor.

(3) Window numbers listed in the window schedule indicate Miami Awning Windows manufactured by Miami Window Corp. or approved equal. Windows are to be equipped with screens of aluminum frames and 18-16 aluminum mesh. Weather stripping shall be elastomeric vinyl, Koroseal or equal.

(4) Aluminum Windows and Posts shall have the same finish.

(5) Door shall be the Vacol Extruded Aluminum Panel Door. Threshold shall be No. 21 with elastomeric vinyl weatherstripping. Screen Door and Hardware shall be Vacol Extruded Aluminum Door. Doors and Threshold shall be as manufactured by V.E. Anderson Mfg. Co., Bradenton, Florida, or equal. Doors shall be equipped with hardware according to manufacturer's specification. Aluminum for Doors and Windows shall be 6063-T5 and shall be suitable for use over salt water.

(6) Concrete to be as specified for the Pier.

(7) All exterior concrete surfaces shall be given Class 1 Surface Finish. All interior concrete surfaces shall be given Class 2 Surface Finish, and painted with two coats of Terrace Green, "Para-Stone Tex Masonry Coating," manufactured by Truscon Laboratories, Detroit, Mich., or equal.

(8) Cost of Control Desk and Navigation Horn are not covered by Contract Price for Control House.

(9) Chamfer all exposed edges ¾" unless otherwise shown.

(10) Contractor shall submit Shop Drawings showing complete details of aluminum windows, doors & Aluminum Tube Posts.

CONCRETE CONTROL HOUSE, STRUCTURE "A"

STATE ROAD DEPARTMENT OF FLORIDA
BRIDGE DIVISION

BRIDGES BETWEEN ESTERO ISLAND AND BONITA BEACH

REVISIONS		ROAD NO.	COUNTY		PROJECT NO.
Date	Descriptions	S865	LEE		12530-3153
			Name	Date	APPROVED BY
		Detailed by	J.L.P.	2-62	T. W. Lennon
		Checked by	W.M.G.	2-62	Assistant State Engineer
		Quantities by			Assistant State Engineer
		Checked by			Drawing No. 32 OF 60
		Traced by	C.F.H.	2-62	Index No. 7700

BX1-65

BX1-65

BX1-66

EB-40

FED. ROAD DIST. NO.	STATE	PROJECT NO.	FISCAL YEAR	SHEET NO.
3	FLA.	12530-3153	'63	B-54

Note: Circuit shown for 3 wire service. For 4 wire service omit transformer (#25) and use single pole breakers in panel (#26).

NOTE
Bond all cabinets and frames to the system ground with #4 bare conductors.

KEY

NO.	QUANT.	DESCRIPTION	LOCATION
1	1	Bascule drive machinery unit	M.R.
2	1	Tachometer counter	C.D.
3	1	Tachometer transducer	C.D.
4	1	Cable reel assembly	C.D.
5	1	Cable reeling drive motor, 1/2 H.P., 1750 R.P.M., 115 volt, A.C., single phase, with enclosed gear reducer and integral disc brake	C.D.
6	1	Limit switch assembly	C.D.
7	1	Coupling	C.D.
8	1	Transformer, 2400/115 volt, 1 K.V.A.	C.D.
9	1	Voltmeter, transfer switch	C.D.
10	1	Ammeter, transfer switch	C.D.
11	1	Watt hour circuit breaker	C.D.
12	1	Watt hour circuit breaker	C.D.
13	1	Watt hour circuit breaker	C.D.
14	1	Bell alarm, 115 volt, A.C.	C.D.
15	1	Mercury contactor (electrically and mechanically interlocked)	C.D.
16	1	Mercury contactor (electrically and mechanically interlocked) with time delay opening device relay	C.D.
17	3	Bell alarm, 3 pole circuit breaker, 230 volt, A.C., 60 cycle, 3 wire, 225 amp. trip	M.R.
18	3	Bell alarm, 3 pole circuit breaker, 230 volt, A.C., 60 cycle, 3 wire, 150 amp. trip	M.R.
19	1	Solenoid, 115 volt, A.C.	C.D.
20	1	Solenoid, 230 volt, A.C.	C.D.
21	1	Circuit breaker, 230 volt, A.C., 60 cycle, 3 wire, 225 amp. trip	C.D.
22	1	Circuit breaker, 230 volt, A.C., 60 cycle, 3 wire, 150 amp. trip	C.D.
23	1	Motor starter, 230 volt, A.C., 3 phase, 60 cycle, 20 H.P.	M.R.
24	1	Motor starter, 230 volt, A.C., 3 phase, 60 cycle, 2 H.P.	M.R.
25	1	Transformer, 2400/230 volt, 3 K.V.A.	C.D.
26	1	Panel board, 230 volt, 3 wire, 60 cycle, 225 amp. main, 12 circuit	C.D.
27	1	Panel board, 230 volt, 3 wire, 60 cycle, 150 amp. main, 12 circuit	C.D.
28	1	Control panel, etc.	C.D.
29	2	Fuse block, 30 amp.	C.D.
30	2	Fuse block, 60 amp.	C.D.
31	2	Fuse block, 100 amp.	C.D.
32	2	Fuse block, 200 amp.	C.D.
33	2	Fuse block, 400 amp.	C.D.
34	2	Fuse block, 600 amp.	C.D.
35	2	Fuse block, 800 amp.	C.D.
36	2	Fuse block, 1000 amp.	C.D.
37	1	Limit switch	C.D.
38	1	Push button station (Lowering)	C.D.
39	1	Push button station (Raising)	C.D.
40	1	Push button station (Stop)	C.D.
41	1	Push button station (Lowering)	C.D.
42	1	Push button station (Raising)	C.D.
43	1	Push button station (Stop)	C.D.
44	1	Push button station (Lowering)	C.D.
45	1	Push button station (Raising)	C.D.
46	1	Push button station (Stop)	C.D.
47	1	Push button station (Lowering)	C.D.
48	1	Push button station (Raising)	C.D.
49	1	Push button station (Stop)	C.D.
50	1	Push button station (Lowering)	C.D.
51	1	Push button station (Raising)	C.D.
52	1	Push button station (Stop)	C.D.
53	1	Push button station (Lowering)	C.D.
54	1	Push button station (Raising)	C.D.
55	1	Push button station (Stop)	C.D.
56	1	Push button station (Lowering)	C.D.
57	1	Push button station (Raising)	C.D.
58	1	Push button station (Stop)	C.D.
59	1	Push button station (Lowering)	C.D.
60	1	Push button station (Raising)	C.D.
61	1	Push button station (Stop)	C.D.
62	1	Push button station (Lowering)	C.D.
63	1	Push button station (Raising)	C.D.
64	1	Push button station (Stop)	C.D.
65	1	Push button station (Lowering)	C.D.
66	1	Push button station (Raising)	C.D.
67	1	Push button station (Stop)	C.D.
68	1	Push button station (Lowering)	C.D.
69	1	Push button station (Raising)	C.D.
70	1	Push button station (Stop)	C.D.
71	1	Push button station (Lowering)	C.D.
72	1	Push button station (Raising)	C.D.
73	1	Push button station (Stop)	C.D.
74	1	Push button station (Lowering)	C.D.
75	1	Push button station (Raising)	C.D.
76	1	Push button station (Stop)	C.D.
77	1	Push button station (Lowering)	C.D.
78	1	Push button station (Raising)	C.D.
79	1	Push button station (Stop)	C.D.
80	1	Push button station (Lowering)	C.D.
81	1	Push button station (Raising)	C.D.
82	1	Push button station (Stop)	C.D.
83	1	Push button station (Lowering)	C.D.
84	1	Push button station (Raising)	C.D.
85	1	Push button station (Stop)	C.D.
86	1	Push button station (Lowering)	C.D.
87	1	Push button station (Raising)	C.D.
88	1	Push button station (Stop)	C.D.
89	1	Push button station (Lowering)	C.D.
90	1	Push button station (Raising)	C.D.
91	1	Push button station (Stop)	C.D.
92	1	Push button station (Lowering)	C.D.
93	1	Push button station (Raising)	C.D.
94	1	Push button station (Stop)	C.D.
95	1	Push button station (Lowering)	C.D.
96	1	Push button station (Raising)	C.D.
97	1	Push button station (Stop)	C.D.
98	1	Push button station (Lowering)	C.D.
99	1	Push button station (Raising)	C.D.
100	1	Push button station (Stop)	C.D.

LIMIT SWITCH SCHEDULE

| | | |

BX1-67

BX1-67

EB-41

FED. ROAD DIV. NO.	STATE	PROJECT NO.	FISCAL YEAR	SHEET NO.
3	FLA	12530-3153	61	8-55

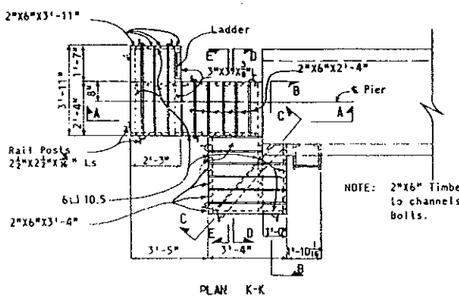

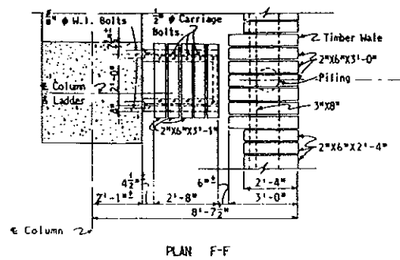

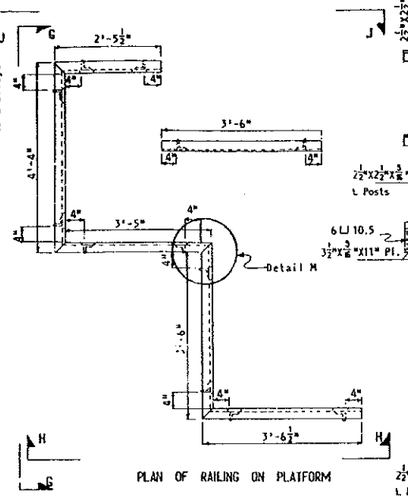

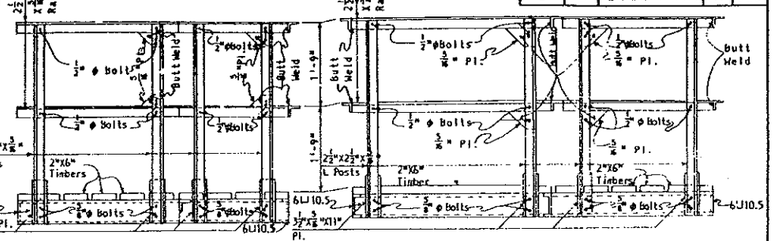

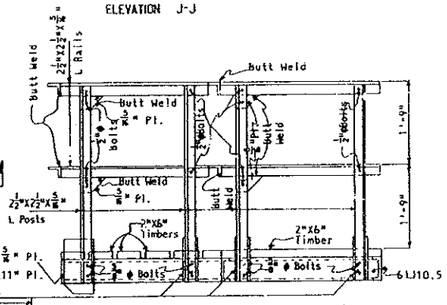

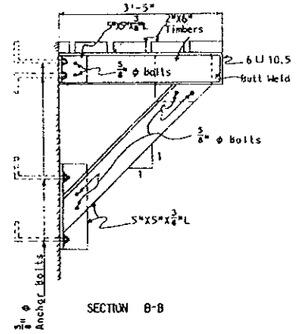

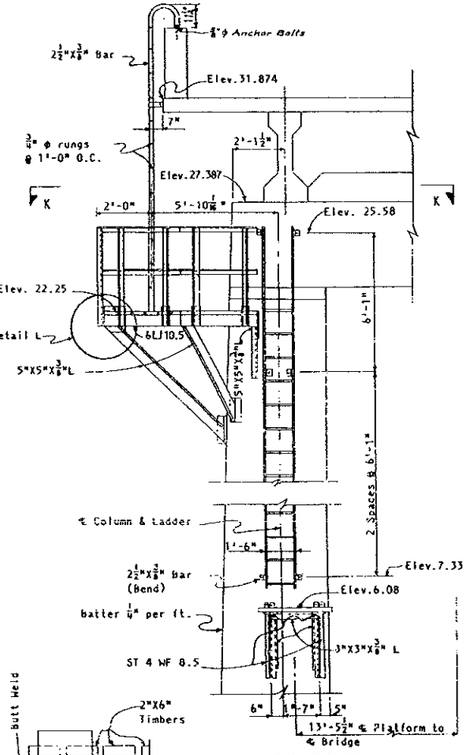

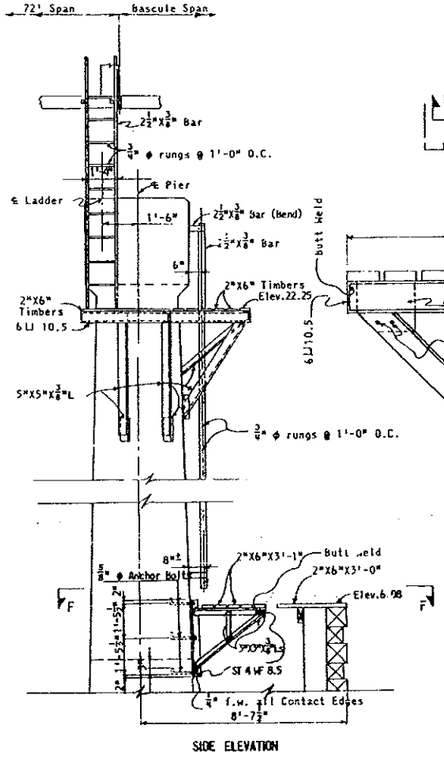

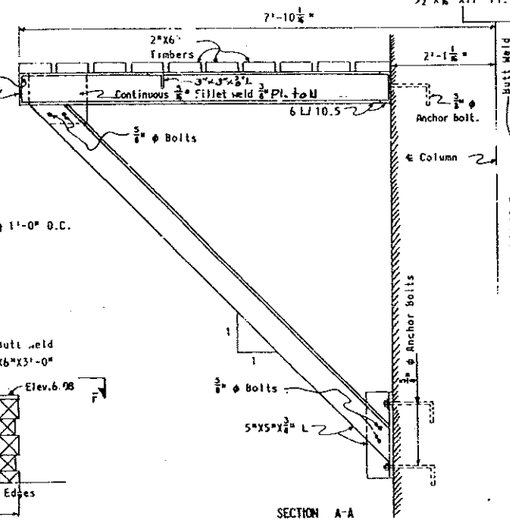

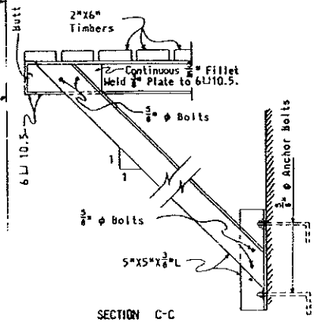

NOTE: An aluminum ladder and Platform of Corrosion Resistant Alloys and of strength equal to the Steel Design shown may be substituted at the Option of the Contractor.

NOTE: All Timber shall be rough.

NOTE: All Steel for Ladders and Access Platforms including Plates, Shapes, Bars, Bolts, Nuts and Washers shall be hot dip galvanized in accordance with requirements of A.S.T.M. Specification Designation A-123. Welding of parts shall be done prior to galvanizing.

ESTIMATED QUANTITIES		
ITEM	UNIT	QUANTITY
Structural Steel (Flanking Span, Ladders & Platforms)	Lump Sum	*
Treated Structural Timber (12 lb. Treatment)	M.F.B.M.	.065

* See Estimated Bridge Quantities (Estimated Structural Steel in Ladders & Platforms for One Rest Pier is 1963 lbs.).

STRUCTURE A ~ REST PIER

ACCESS LADDERS AND PLATFORMS

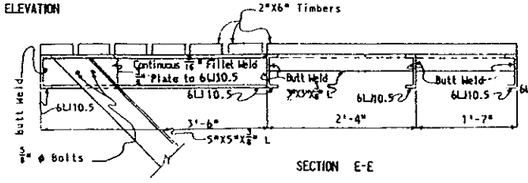

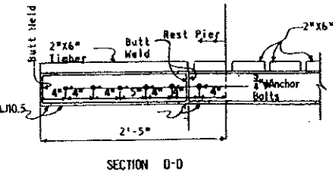

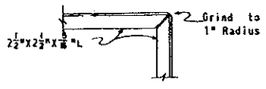

STATE ROAD DEPARTMENT OF FLORIDA
BRIDGE DIVISION

BRIDGES BETWEEN ESTERO ISLAND AND BONITA BEACH

REVISIONS		ROAD NO.	COUNTY	PROJECT NO.
Date	Descriptions	S-865	LEE	12530-3153

	Names	Dates
Detailed by	B.R.L.	2-61
Checked by	R.L.T.	2-61
Quantities by	B.R.L.	2-61
Checked by	R.L.T.	2-61
Traced by	B.R.L.	2-61

APPROVED BY: T. W. Jennings, Assistant State Highway Engineer

Drawing No. 39 of 60

Index No. 7700

BX1-67

BX1-68

BX1-68

EB-42

FED. ROAD DIST. NO.	STATE	PROJECT NO.	FISCAL YEARS	SHEET NO.
3	FLA.	[illegible]	[illegible]	[illegible]

Red Navigation Light and Clearance Gage — see notes and details on other Fender.

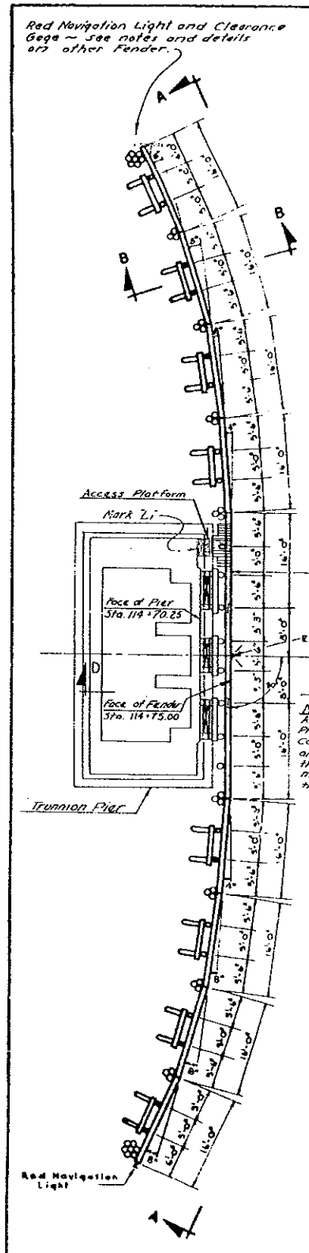

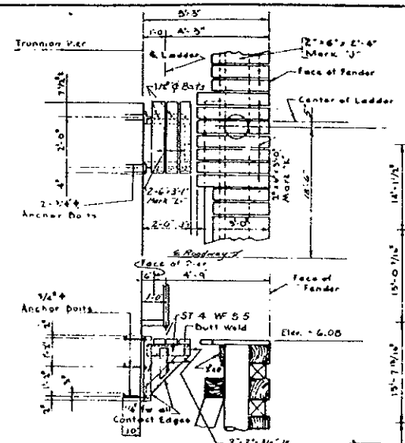

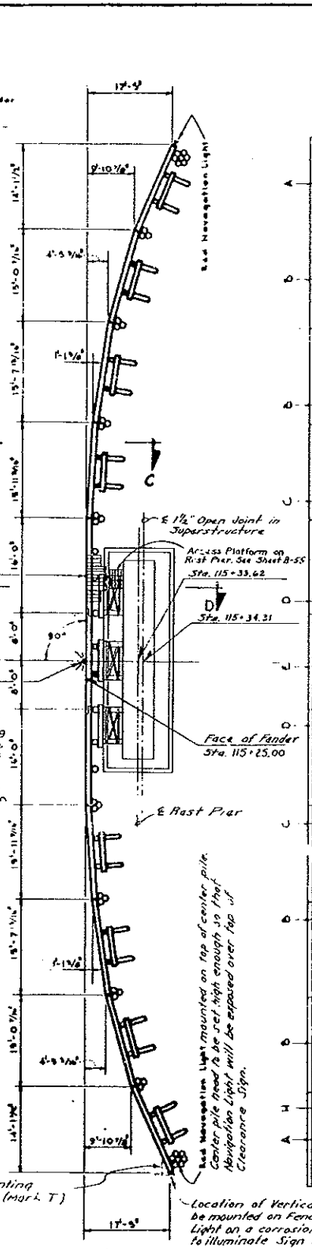

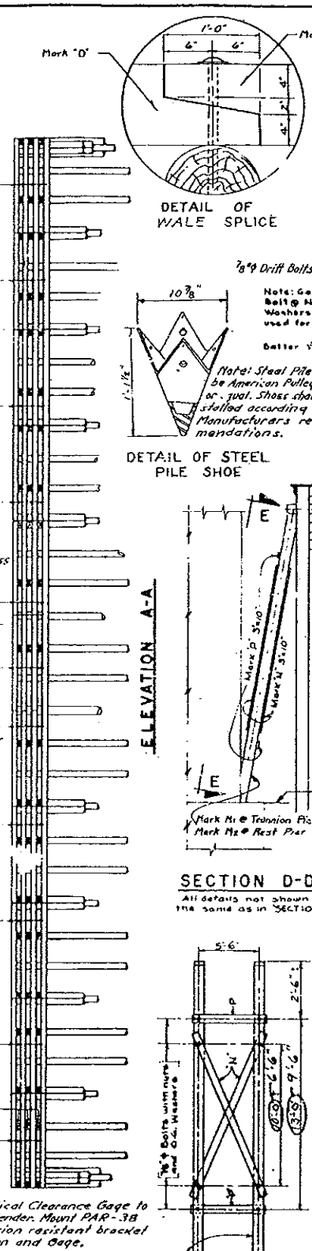

PILE HEADS: Treat with creosote oil and pitch as specified in Article 403.15 of the Specifications, and cover with 10 oz. Copper Sheets at least 6" larger in each dimension than the diameter of the pile. Bend cover down and fasten with large headed copper nails or three wraps of #12 Copper Wire.

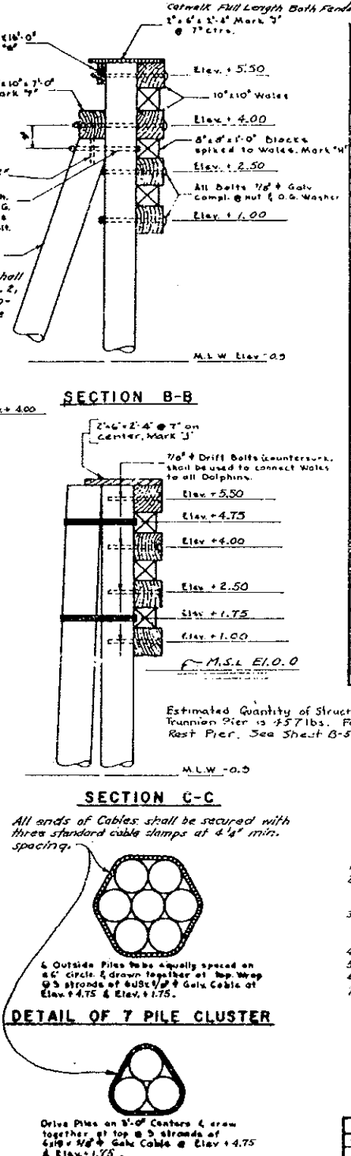

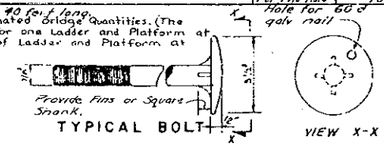

BILL OF TREATED STRUCTURAL TIMBER FOR TWO FENDERS

MARK	SIZE	LENGTH	NO. REQ	F B M	CUTTING DIAGRAM
A	10"x10"	16'-0"	16	2133	16' 4'-0"
B	10"x10"	16'-0"	32	4267	8'-0" 16' 4'-0"
C	10"x10"	16'-0"	16	2133	4'-0" 16' 7'-0"
D	10"x10"	16'-6"	16	2200	2'-0" 16'-6" 16' 4" 2"
E	10"x10"	17'-0"	8	1133	1'-6" 17' same as other end
F	10"x10"	7'-0"	22	1283	7'
G	5"x8"	16'-0"	22	704	16'
H	8"x8"	1'-0"	132	704	1'-0"
J	7"x6"	2'-9"	590	1377	2'-9"
K	5"x6"	3'-0"	14	42	3'-0"
L1	2"x6"	3'-1"	3	9	3'-1"
M1	10"x10"	(16'-6" 20'-6")	6	(825) 825	Cut Ends in Field to Fit
M2	10"x10"	17'-6"	6	875	
N	3"x10"	(3'-6" 12'-0")	12	285 (375)	(12'-0" 3'-6")
P	3"x10"	6'-6"	12	195	6'-6"
T	10"x10"	14'-0"	2	233	Cut to Fit

ESTIMATED QUANTITIES FOR TWO FENDERS

ITEM	UNIT	QUANTITY
Treated Structural Timber (12 # Treatment)	M.F.B.M.	(18.68#)
Treated Timber Piling #	Lin. Ft.	4240
Structural Steel (Flanking Spans, Ladders & Platforms)	Lump. Sum	*
Shoes for Timber Piling	Each	156
Punching	Per Pile Hole	78

156 Piles @ 40 feet long.
* See Estimated Bridge Quantities. (The

SECTION D-D

All details not shown are the same as in "SECTION E-E"

All ends of Cables shall be secured with three standard cable clamps at 4'-4" min. spacing.

NOTES

1. Pile Tips: 7" diameter tips will be accepted on Timber Piles.
2. Bolts: All bolts shall be Dome Head Bolts, 7/8"ø with one Galv. O.G. washer & nut. Special forged nut equal to diameter of O.G. washer may be used in lieu of O.G. washer.
3. Access Platform: Anchor Bolts & 3/4" ø Bolts (Round Head) shall be Galv. & shall be paid for as Structural Steel (Flanking Spans, Ladders & Platforms.)
4. Treatment: All Timber shall be given 12# Treatment
5. Pile Head Coverings: See Specifications & Pile Head Note on this Sheet.
6. Timber: All Timber shall be rough.
7. Hardware: The cost of Hardware shall be included in the Contract Unit Price for Treated Structural Timber (12# Treatment). All Hardware shall be Galv.

Signs to be furnished by State Road Dept. and erected by the Contractor. Cost of erection to be included in the Contract Unit Price for Treated Structural Timber (12 Lb. Tr.). Mounting Timber (10"x10"x 14'-0" - 2 req'd.) shall be paid for at the Contract Unit Price for Treated Structural Timber (12 Lb. Tr.).

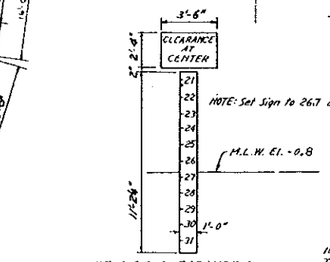

PLAN
(With Catwalk Omitted)

STRUCTURE A ~ DETAILS OF FENDER AND PLATFORM

STATE ROAD DEPARTMENT OF FLORIDA
BRIDGE DIVISION

BRIDGES BETWEEN ESTERO ISLAND AND BONITA BEACH

REVISIONS		ROAD NO.	COUNTY	PROJECT NO.
Date	Description	S 865	[illegible]	[illegible]
1/64	Piles Removed, Seal depth increased			

	Name	Date
Detailed by	G.F.J.	9-57
Checked by	L.H.S.	10-57
Quantities by	L.H.S.	10-57
Checked by	B.G.L.	9-58
Traced by	S.F.J.	9-57

APPROVED BY: T. W. [illegible]

Sheet No. 55 of 60 Sheets | Index No. .7700

BX1-68

BX1-68

BX1-69
BX1-69

LEE COUNTY
BOARD OF COUNTY COMMISSIONERS

PUBLIC WORKS ADMINISTRATION
DEPARTMENT OF TRANSPORTATION

SCOTT GILBERTSON, DIRECTOR
BRUCE McAULIFFE, PROJECT MANAGER

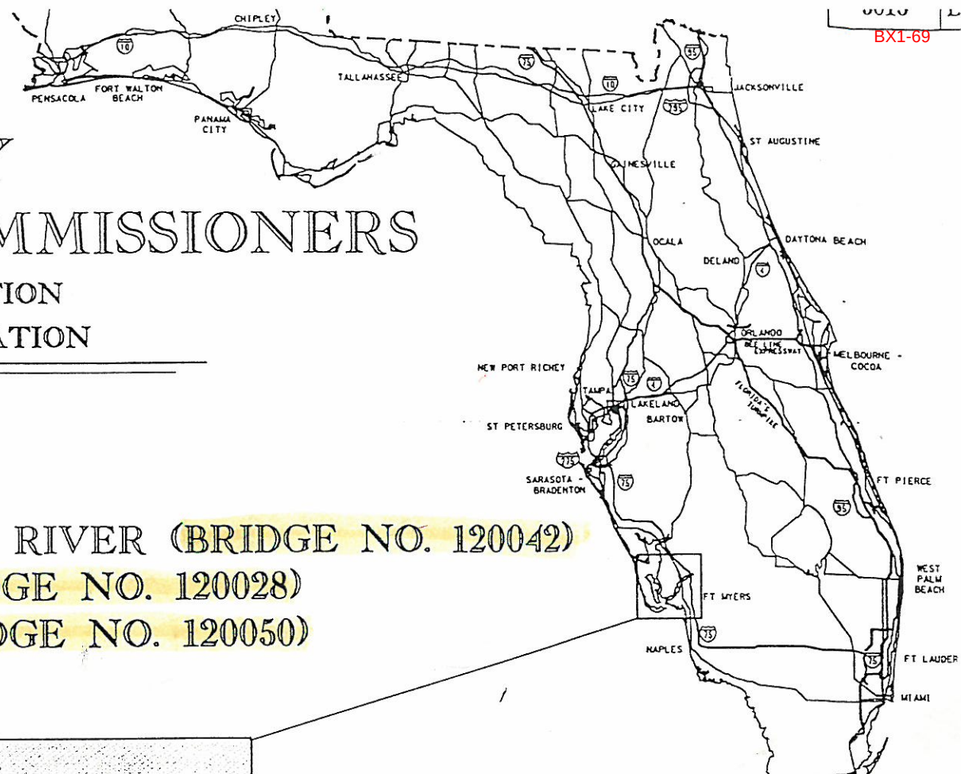

ALVA DRAW BRIDGE OVER CALOOSAHATCHEE RIVER (BRIDGE NO. 120042)
CR 865 OVER BIG CARLOS PASS (BRIDGE NO. 120028)
CR 78 OVER MATLACHA PASS (BRIDGE NO. 120050)

PROJECT NO. 5015

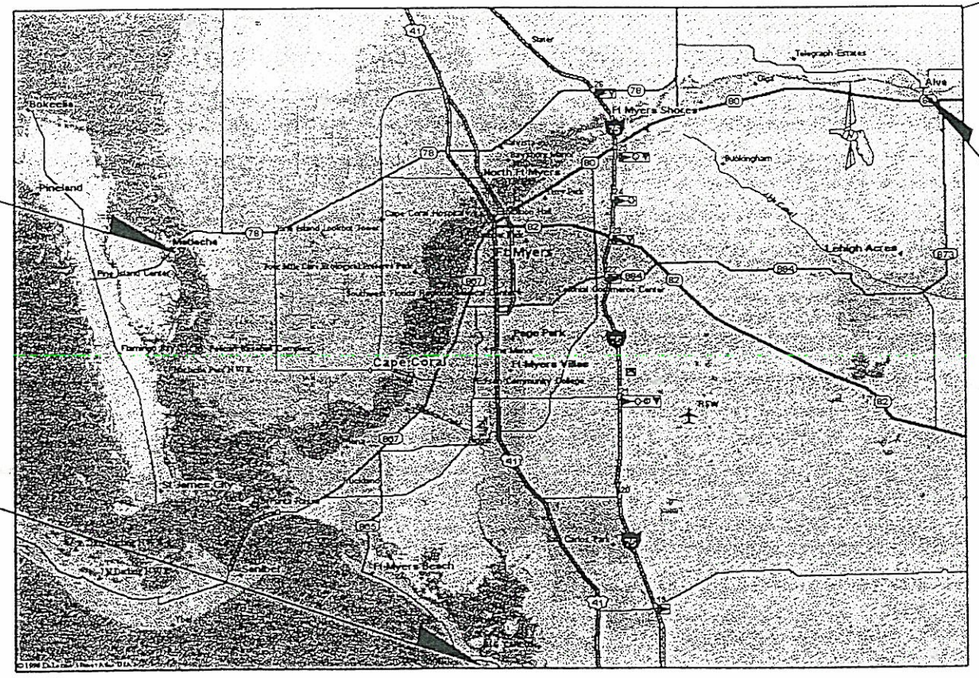
Alva
Ft Myers Shores
North Ft Myers
Ft Myers
Cape Coral
Fort Myers Beach
Buckingham
Lehigh Acres
Pine Island Center
Matlacha
Pine Island
Pine Island Ridge
Pine Island Estates
Pine Island Center
Pine Island Sound
Matlacha Pass
Matlacha Pass National Wildlife Refuge
Caloosahatchee River
Gulf of Mexico
Estero Bay
Estero
Telegraph Estates
Princeland
Pine Island Landing Airport
Pine Island Elementary School
Pine Island Cemetery
Pine Island Community Park
Pine Island Recreation Complex
Pine Island Fire Station
Pine Island Public Library
Pine Island Volunteer Fire Department
Pine Island Chamber of Commerce
Pine Island Historical Museum
Pine Island Florist & Nursery
Pine Island Elementary School
Pine Island Middle-High School
Pine Island Church
Pine Island Baptist Church
Pine Island Methodist Church
Pine Island Presbyterian Church
Pine Island Congregational Church
Pine Island Community Center
Pine Island Fire Department
Pine Island Public Library

BX1-70

BX1-70 B

PLOT STATION TEXT

GENERAL DRAWINGS

SHEET NO.	SHEET DESCRIPTION
B-1	KEY SHEET
B-2	INDEX OF SHEETS
B-3	GENERAL NOTES (1 OF 2)
B-4	GENERAL NOTES (2 OF 2)
B-5	PLAN & ELEVATION (ALVA DRAW BRIDGE)
B-6	PLAN & ELEVATION (BIG CARLOS DRAW BRIDGE)
B-7	PLAN & ELEVATION (MATLACHA DRAW BRIDGE)
B-8	ALVA BASCULE SPAN WORK IDENTIFICATION
B-9	BIG CARLOS BASCULE SPAN WORK IDENTIFICATION
B-10	MATLACHA BASCULE SPAN WORK IDENTIFICATION
B-11	MACHINERY ROOM WORK IDENTIFICATION
B-12	GUARDRAIL END RETROFIT (ALVA DRAW BRIDGE)
B-13	CONCRETE REPAIR DETAILS
B-14	PILE JACKETS (1 OF 3) (MATLACHA DRAW BRIDGE)
B-15	PILE JACKETS (2 OF 3) (MATLACHA DRAW BRIDGE)
B-16	PILE JACKETS (3 OF 3) (MATLACHA DRAW BRIDGE)
B-17	PILE REPAIR DETAILS (BIG CARLOS DRAW BRIDGE)
B-18	FENDER SYSTEM REPAIR DETAILS (MATLACHA DRAW BRIDGE)
B-19	MAINTENANCE PAINTING OF STRUCTURAL STEEL
B-20	CLEANING & COATING OF CONCRETE SURFACES
B-21	STRUCTURAL STEEL REPAIR DETAILS (1 OF 6)
B-22	STRUCTURAL STEEL REPAIR DETAILS (2 OF 6)
B-23	STRUCTURAL STEEL REPAIR DETAILS (3 OF 6)
B-24	STRUCTURAL STEEL REPAIR DETAILS (4 OF 6)
B-25	STRUCTURAL STEEL REPAIR DETAILS (5 OF 6)
B-26	STRUCTURAL STEEL REPAIR DETAILS (6 OF 6)

MECHANICAL DRAWINGS

SHEET NO.	SHEET DESCRIPTION
M-1	MECHANICAL REPAIR DETAILS (1 OF 3)
M-2	MECHANICAL REPAIR DETAILS (2 OF 3)
M-3	MECHANICAL REPAIR DETAILS (3 OF 3)
M-4	SPAN LOCK DETAILS (ALVA DRAW BRIDGE)
M-5	SPAN LOCK DETAILS (MATLACHA DRAW BRIDGE)

ELECTRICAL DRAWINGS

SHEET NO.	SHEET DESCRIPTION
E-1	MOVABLE BRIDGE SIGNALS
E-2	TRAFFIC SAFETY GATES & ELECTRICAL REPAIR DETAILS (MATLACHA DRAW BRIDGE)
E-3	ELECTRICAL REPAIR DETAILS (BIG CARLOS DRAW BRIDGE)

EXISTING BRIDGE DRAWINGS

SHEET NO.	SHEET DESCRIPTION	EXISTING SHEET NO.
	ALVA DRAW BRIDGE	
EB-1A	SAFETY GATE PLATFORMS	B-14
EB-2A	BASCULE SPAN - MAIN GIRDER	B-25
EB-3A	COUNTERWEIGHT - GENERAL OUTLINE	B-28
EB-4A	BASCULE SPAN - CENTERLOCK DETAILS	B-33
EB-5A	ELEMENTARY WIRING DIAGRAM	B-35
	BIG CARLOS DRAW BRIDGE	
EB-1B	TYPICAL DETAIL FOR 18" SQUARE AND 20" SQUARE PRESTRESSED PILES	B-12
EB-2B & EB-3B	DETAILS OF TRAFFIC LIGHT AND SAFETY GATE PLATFORMS	B-35 & B-36
EB-4B	REST PIER 1-E (REST PIER 19)	B-38
EB-5B	TRUNNION PIER - GENERAL LAYOUT	B-39
EB-6B	BASCULE SPAN - MAIN GIRDER	B-46
EB-7B	COUTERWEIGHT - GENERAL DETAILS	B-47
EB-8B	BASCULE SPAN - MACHINERY LAYOUT	B-48
EB-9B	BASCULE SPAN - TRUNNION & RELATED DETAILS	B-50
EB-10B	LOCK ASSEMBLIES AND LIVE LOAD SHOES	B-51
EB-11B	BUFFER DETAILS	B-52
EB-12B	ELEMENTARY WIRING DIAGRAM	B-54
	MATLACHA DRAW BRIDGE	
EB-1C	SAFETY GATE FOUNDATION DETAILS	B-22
EB-2C	REST PIER	B-23
EB-3C & EB-4C	TRUNNION PIER - GENERAL LAYOUT	B-24 & B-25
EB-5C THRU EB-8C	BASCULE SPAN - FRAMING PLAN & DETAILS	B-33 THRU B-36
EB-9C	COUNTERWEIGHT	B-37
EB-10C	BASCULE SPAN - LOCK DETAILS	B-40
EB-11C	ELEMENTARY WIRING DIAGRAM	B-45
EB-12C	18" SQUARE, 20" SQUARE AND 24" SQUARE PRESTRESSED CONCRETE PILES	B-46

SCALE: 1/2 REVISION: 0 02/18/00 LFS

19805.03 GENNOTES.DGN

REVISIONS					
Date	By	Description	Date	By	Description

	Names	Dates
Drawn by	LFS	02/00
Checked by	DBT	02/00
Designed by	---	---
Checked by	---	---
Approved by	[signature]	2/18/00

ENGINEER OF RECORD:
Kisinger Campo and Associates Corp.
2203 N. LOIS AVE.
SUITE 1200
TAMPA, FLORIDA 33607

LOGO: KCA

Lee COUNTY

DEPARTMENT OF TRANSPORTATION

SHEET TITLE: INDEX OF SHEETS

PROJECT NAME: ALVA, BIG CARLOS, & MATLACHA BASCULE BRIDGE REPAIR

BX1-70

BX1-70

BX1-71

BX1-71

DESIGN SPECIFICATIONS :

1. FLORIDA DEPARTMENT OF TRANSPORTATION (FDOT) STANDARD SPECIFICATIONS FOR ROAD AND BRIDGE CONSTRUCTION (1999 EDITION WITH METRIC UNITS CONVERTED TO EQUIVALENT ENGUSH UNITS AND ALL SUPPLEMENTS THERETO).
2. AMERICAN ASSOCIATION OF STATE HIGHWAY AND TRANSPORTATION OFFICIALS (AASHTO) STANDARD SPECIFICATIONS FOR HIGHWAY BRIDGES (1996 EDITION WITH REVISIONS THROUGH 1999).
3. AASHTO STANDARD SPECIFICATIONS FOR MOVABLE HIGHWAY BRIDGES (1988 WITH REVISIONS THROUGH 1999).
4. FDOT STRUCTURES DESIGN GUIDELINES (1997 EDITION).
5. FDOT ROADWAY AND TRAFFIC DESIGN STANDARDS (JANUARY 1998).

DESIGN METHOD :

STRENGTH DESIGN METHOD (LOAD FACTOR DESIGN) FOR NEW MECHANICAL COMPONENTS.
WORKING STRESS DESIGN FOR REPLACEMENT OF COMPONENTS IN KIND.

SCOPE OF WORK :

1. STRUCTURAL STEEL REPAIR
2. CONCRETE SPALL REPAIR
3. GUARDRAIL RETROFIT
4. FENDER REPAIR
5. MECHANICAL REPAIR
5. ELECTRICAL REPAIR
6. CLEANING & COATING OF CONCRETE SURFACES
7. MAINTENANCE PAINTING OF STRUCTURAL STEEL
8. PILE JACKET INSTALLATION
9. BRIDGE BALANCING

DRAWINGS AND DIMENSIONS:

1. DO NOT SCALE DRAWINGS FOR DIMENSIONS NOT GIVEN.

2. VERIFY ALL EXISTING FIELD CONDITIONS AND DIMENSIONS PRIOR TO COMMENCING REPAIRS OR ORDERING ANY MATERIALS. NOTIFY ENGINEER OF ANY DISCREPANCIES FOUND.

ACCESS AND SECURITY:

THE CONTRACTOR SHALL PROVIDE SAFE ACCESS TO ALL WORK AREAS. IT SHALL BE THE CONTRACTOR'S RESPONSIBILITY TO MAINTAIN A SAFE AND SECURE WORK SITE INCLUDING ALL LOCAL WORK SITES, EQUIPMENT, AND STAGING AREAS. FENCING AND OTHER BARRIERS SHALL BE PROVIDED BY THE CONTRACTOR TO PREVENT HARM TO THE PUBLIC.

DATUM:

MEAN HIGH WATER AND MEAN LOW WATER ELEVATIONS BASED ON NGVD, 1929.

ENVIRONMENT:

DESCRIPTION: CORROSIVE (EXTREMELY AGGRESSIVE)
LOCATION: COASTAL

ENVIRONMENTAL CONSIDERATION :

STANDARD MANATEE CONSTRUCTION CONDITIONS ARE REQUIRED IN ACCORDANCE WITH THE FDEP BUREAU OF PROTECTED SPECIES MANAGEMENT. ASSOCIATED COSTS SHALL BE INCIDENTAL TO THE PROJECT.

EQUIPMENT:

IT SHALL BE THE CONTRACTOR'S SOLE RESPONSIBILITY TO PROVIDE ALL EQUIPMENT NECESSARY FOR THE COMPLETION OF THE REPAIRS DESCRIBED IN THE PLANS AND SPECIFICATIONS, INCLUDING ITEMS SUCH AS LIGHTING, WORKBOATS AND MOORING ARRANGEMENTS.

MATERIAL PRODUCTS:

1. EXCEPT FOR THOSE MATERIAL PRODUCTS SPECIFICALLY CALLED FOR IN THE PLANS AND SPECIFICATIONS, ALL MATERIAL PRODUCTS SPECIFIED FOR THIS PROJECT SHALL BE ON THE FDOT QUALIFIED PRODUCTS LIST.

2. MATERIALS MEETING THE REQUIREMENTS OF THE PLANS AND SPECIFICATIONS SHALL BE INSTALLED IN ACCORDANCE WITH APPROVED MANUFACTURER'S RECOMMENDATIONS.

CONCRETE:

CAST-IN-PLACE SIDEWALK CONCRETE SHALL BE IN ACCORDANCE WITH SECTION 346 OF THE SPECIFICATIONS.

CLASS	APPLICATION	MIN. 28 DAY COMPRESSIVE STRESS
II	CAST-IN-PLACE SIDEWALK	3000 PSI

PILE JACKETS SYSTEM:

THE PILE JACKETS SHALL BE IN ACCORDANCE WITH SECTION 457 OF THE SPECIAL PROVISIONS.

CONCRETE FOR PILE JACKETS:

THE FILLER ASSOCIATED WITH THE PILE JACKETS SHALL BE IN ACCORDANCE WITH SECTION 457 OF THE SPECIAL PROVISIONS. THE USE OF FLY ASH IN THE MIX IS NOT ALLOWED.

LATEX MODIFIED PORTLAND CEMENT CONCRETE:

1. FOR REQUIREMENTS ON MIX PROPORTIONS, SURFACE PREPARATION, MIXING, PLACING, FINISHING, MATERIALS AND OTHER RELATED ITEMS, REFER TO THE SPECIFICATIONS FOR LATEX MODIFIED PORTLAND CEMENT CONCRETE.

2. AS AN ALTERNATE TO LATEX MODIFIED PORTLAND CEMENT CONCRETE, THE FOLLOWING BAG MIXES OR APPROVED EQUALS MAY BE SUBSTITUTED IN ACCORDANCE WITH MANUFACTURER'S SPECIFICATIONS:
   A) EUCO-SPEED MP (EUCLID CHEMICAL COMPANY (800) 321-7628)
   B) RAPID ROAD REPAIR (QUIKRETE (404) 634-9100)
   C) SET 45 HOT WEATHER (MASTER BUILDERS (800) MBT-9900)

3. FOR VOLUMES OF BAG MIX IN EXCESS OF 3.0 CUBIC FEET AT A SINGLE LOCATION, A MIX PLAN MUST BE SUBMITTED TO THE ENGINEE FOR APPROVAL.

4. AGGREGATE MUST BE ANGULAR GRANITE TYPE. SMOOTH RIVER ROCK IS NOT ALLOWED.

5. FOR MINOR SPALL REPAIRS TO HANDRAILS AND BARRIERS (LESS THAN 1.0 CU. FT.), PROPRIETARY MORTARS MAY BE SUBSTITUTED FOR LATEX MODIFIED PORTLAND CEMENT CONCRETE AS APPROVED BY THE ENGINEER.

STRUCTURAL STEEL:

1. ALL STRUCTURAL STEEL SHALL BE IN ACCORDANCE WITH ASTM A709, GRADE 36 (AASHTO DESIGNATION M270, GRADE 36). MAXIMUM ULTIMATE DESIGN STRESSES ARE AS FOLLOWS:

	GRADE 36
TENSION	36,000 PSI
SHEAR	21,000 PSI

2. ALL ASTM A709 STRUCTURAL STEEL SHALL BE FABRICATED BY A CERTIFIED SHOP MEETING THE REQUIREMENTS OF AISC CATEGORY Sbr (SIMPLE STEEL BRIDGES) CERTIFICATION. SHOP DRAWINGS ARE REQUIRED ON ALL STRUCTURAL STEEL.

3. BOLTS: ALL FIELD CONNECTIONS SHALL BE MADE WITH HIGH STRENGTH FRICTION TYPE BOLTS IN ACCORDANCE WITH ASTM A325 (TYPE 1), NOT COATED, WITH HARDENED STEEL WASHERS AND HEAVY HEX NUTS, UNLESS OTHERWISE NOTED. CONNECTIONS ARE CONSIDERED 'SLIP-CRITICAL'. FASTENER COMPONENTS SHALL BE CLEAN OF SCALE AND RUST, LUBRICATED AND TENSIONED ACCORDING TO THE SPECIFICATIONS. BOLTS, NUTS AND WASHERS SHALL BE BLACK AND PAINTED WITH THE STEEL.

WELDING:

1. WELD DETAILS AND THE WELDING OPERATIONS SHALL BE IN ACCORDANCE WITH THE CURRENT EDITION OF THE ANSI/AASHTO/AWS D1.5-96 BRIDGE WELDING CODE. WELDS REQUIRING NON-DESTRUCTIVE TESTING SHALL BE RADIOGRAPHICALLY INSPECTED EXCEPT WHERE THE GEOMETRY OF THE REGION OF THE WELD WILL NOT PERMIT SATISFACTORY INFORMATION TO BE SECURED FOR VERIFICATION OF THE WELD QUALITY. WHEN SUCH GEOMETRICAL CONDITIONS EXIST, OTHER INSPECTION PROCEDURES OR COMBINATIONS OF PROCEDURES SUCH AS ULTRASONIC INSPECTION, DYE PENETRANT INSPECTION, AND/OR MAGNETIC PARTICLE INSPECTION SHALL BE USED.

2. NO WELDING SHALL BE ALLOWED ON THE STRUCTURAL STEEL OTHER THAN THOSE WELDS SHOWN ON THE DRAWING AND APPROVED BY THE ENGINEER.

PAINTING:

1. CLEANING AND PAINTING OF NEW STRUCTURAL STEEL AND EXISTING STRUCTURAL STEEL (MAINTENANCE PAINTING) SHALL BE IN ACCORDANCE WITH SECTION 560 OF THE SPECIFICATIONS AND THE SPECIAL PROVISIONS. THE FINISH COAT COLOR SHALL BE SELECTED BY THE ENGINEER.

2. TESTS INDICATE THAT THE ALVA AND MATLACHA DRAW BRIDGES CONTAIN LEAD BASED PAINT. REMOVAL AND DISPOSAL OF ALL LEAD BASED PAINT SHALL CONFORM TO SECTION 560 OF THE SPECIAL PROVISIONS. CONTRACTOR SHALL COMPLY WITH ALL APPLICABLE FEDERAL, STATE AND LOCAL POLLUTION STANDARDS AND REGULATIONS. THE BIDDER MUST PROVIDE EVIDENCE TO LEE COUNTY WITH THE BID THAT THE CONTRACTOR OR SUBCONTRACTOR PERFORMING MAINTENANCE PAINTING OR DEMOLITION WORK ON COMPONENTS COATED WITH LEAD BASED PAINT IS CURRENTLY SSPC-QP 2 CERTIFIED.

3. CLEAN AND PAINT OVER WELDED AREAS OF GALVANIZED STRUCTURAL MEMBERS, AREAS OF PREVIOUSLY PAINTED GALVANIZED MEMBERS AND GALVANIZED MEMBERS ON WHICH THE GALVANIZING HAS, IN THE OPINION OF THE ENGINEER, BECOME SIGNIFICANTLY DAMAGED. REFER TO SECTION 562 OF THE SPECIFICATIONS.

4. IF ANY STRUCTURAL STEEL MEMBERS ARE FOUND TO BE DEFECTIVE AND IN NEED OF REPLACEMENT OR REPAIRS DURING THE CLEANI OPERATION, IN ADDITION TO REPAIRS SPECIFIED, THE CONTRACTOR SHALL PROVIDE DETAILED SHOP DRAWINGS FOR THE REPAIR OF TH STRUCTURAL STEEL FOR THE ENGINEER'S APPROVAL, SIGNED AND SEALED BY A FLORIDA REGISTERED ENGINEER. THE ADDITIONAL REPAIRS WILL BE PAID UNDER PAY ITEM NO. 460-95, STRUCTURAL STEEL REPAIR (PER LB). AFTER COMPLETING THE REPAIRS, THE CONTRACTOR SHALL CLEAN AND PAINT THE REPAIRED SECTIONS AT NO ADDITIONAL COST TO LEE COUNTY.

5. CLEAN AND PAINT REPAIRED STEEL ACCORDING TO THE SPECIFICATIONS AFTER THE COMPLETION OF EACH REPAIR. PAINTING COSTS ASSOCIATED WITH EACH REPAIR SHALL BE CONSIDERED INCIDENTAL TO THE INDIVIDUAL REPAIR PAY ITEMS.

PLOT STATION TEXT ##
SCALE: 1/2 REVISION: 0 02/18/00 PEC
19805.03 GENNOTES

REVISIONS							Names	Dates
Date	By	Description	Date	By	Description	Drawn by	LFS	02/00
						Checked by	DBT	02/00
						Designed by	—	—
						Checked by	—	—
						Approved by	[signature]	2/18/00

ENGINEER OF RECORD:
Kisinger Campo and Associates Corp.
2203 N. LOIS AVE.
SUITE 1200
TAMPA, FLORIDA 33607

LOGO: KCA

LEE COUNTY

DEPARTMENT OF TRANSPORTATION

SHEET TITLE: GENERAL NOTES (1 OF 2)

PROJECT NAME: ALVA, BIG CARLOS, & MATLACHA BASCULE BRIDGE REPAIR

Drawing Index

BX1-71

BX1-71

BX1-72

BX1-72

MAINTENANCE OF TRAFFIC:

1. CONTRACTOR MUST PLAN, SCHEDULE, AND COORDINATE ALL REPAIRS THAT AFFECT BOTH VEHICLE AND MARINE TRAFFIC IN ACCORDANCE WITH THE SPECIFICATIONS.

2. TRAFFIC CONTROL FOR CONSTRUCTION SHALL BE IN ACCORDANCE WITH INDEX SERIES 600 OF THE FDOT ROADWAY AND TRAFFIC DESIGN STANDARDS.

3. THE CONTRACTOR SHALL NOTIFY THE U.S. COAST GUARD MARINE SAFETY OFFICE IN TAMPA AT LEAST 30 DAYS IN ADVANCE FOR APPROVAL OF CONSTRUCTION ACTIVITIES WHICH REDUCE ANY HORIZONTAL OR VERTICAL CLEARANCE OF THE BRIDGE OR WILL REQUIRE FLOATING EQUIPMENT IN THE WATERWAY THAT MAY IMPEDE NAVIGATION. THE U.S. COAST GUARD MARINE SAFETY OFFICE CONTACT IS LT. WARREN WEDEN, (813) 228-2189.

4. THE CONTRACTOR SHALL NOTIFY THE U.S. COAST GUARD BRIDGE ADMINISTRATION OFFICE IN MIAMI AT LEAST 30 DAYS IN ADVANCE FOR APPROVAL OF CONSTRUCTION ACTIVITIES WHICH WILL AFFECT THE OPENING OF THE DRAWBRIDGES AT ANY TIME OR REDUCE THE HORIZONTAL OR VERTICAL CLEARANCE OF THE BRIDGE. THE U.S. COAST GUARD BRIDGE ADMINISTRATION OFFICE CONTACT IS WALT PASKOWSKY, (305) 536-4504.

5. THE CONTRACTOR WILL BE RESPONSIBLE FOR MONITORING VHF CHANNELS 13 AND 16 DURING WORK HOURS FOR MARINER'S INQUIRIES.

6. THE NORMAL OPERATIONS FOR DRAW BRIDGE OPENINGS (MANNED BY A BRIDGE TENDER) ARE AS FOLLOWS:

   ALVA DRAW BRIDGE - 6 A.M. TO 10 P.M., 7 DAYS A WEEK
   BIG CARLOS DRAW BRIDGE - 8 A.M. TO 7 P.M., 7 DAYS A WEEK
   MATLACHA DRAW BRIDGE- 8 A.M. TO 7 P.M., 7 DAYS A WEEK

7. THE CONTRACTOR MAY PERFORM WORK THAT DOES NOT RESTRICT VEHICULAR OR MARINE TRAFFIC AT ANY TIME DURING THE DAY OR NIGHT. THE CONTRACTOR SHALL NOTIFY THE ENGINEER 72 HOURS IN ADVANCE OF ANY NIGHT WORK.

8. THE ALVA DRAW BRIDGE WATERWAY UNDER A SINGLE LEAF SHALL, AT ALL TIMES, REMAIN FREE OF ANY OBJECTS THAT REDUCE THE HORIZONTAL OR VERTICAL CLEARANCE AND IMPEDE NAVIGATION. DURING TIMES NORMALLY MANNED BY A BRIDGE TENDER, THE BRIDGE SHALL OPEN ON DEMAND (SINGLE LEAF OPENING).

9. SINGLE LANE CLOSURES ARE PERMITTED ON THE ALVA, BIG CARLOS & MATLACHA DRAW BRIDGES EXCEPT NO LANE CLOSURES ARE PERMITED FROM 7 A.M. TO 9 A.M AND 4 P.M. TO 6 P.M. MON. - FRI. NOTIFY LEE COUNTY 72 HRS. IN ADVANCE OF ANY SINGLE LANE CLOSURES.

11. ALVA DRAW BIRDGE - COMPLETE BRIDGE CLOSURE TO VEHICULAR TRAFFIC IS PERMITTED FROM 1 A.M. - 6 A.M., SUN. - THUR. (EXCEPT HOLIDAYS) FOR SPAN LOCK INSTALLATION, LIVE LOAD SHOE REPAIR AND BRIDGE BALANCING ONLY. ALL OTHER BRIDGE REPAIRS, INCLUDING PAINTING, SHALL BE COMPLETED WITH AT LEAST ONE LANE OPEN AT ALL TIMES TO VEHICULAR TRAFFIC.
    NOTIFY LEE COUNTY 2 WEEKS IN ADVANCE PRIOR TO ANY BRIDGE CLOSURES.
    ALL REQUESTS FOR BRIDGE CLOSURE REQUIRE THE ENGINEER'S APPROVAL.

12. BIG CARLOS AND MATLACHA DRAW BRIDGE - COMPLETE BRIDGE CLOSURE TO VEHICULAR TRAFFIC IS LIMITED AS FOLLOWS:
    A. INTERMITTEN CLOSURE IS PERMITTED FROM 1 A.M. - 6 A.M., SUN. - THUR. ONLY (EXCEPT HOLIDAYS) FOR SPAN LOCK INSTALLATION, LIVE LOAD SHOE REPAIR AND BRIDGE BALANCING ONLY. BRIDGE MAY BE CLOSED TO TRAFFIC FOR 10 MIN. AND THEN MUST REOPEN (SINGLE LANE) UNTIL WAITING TRAFFIC CLEARS AS DIRECTED BY THE ENGINEER. ALL OTHER BRIDGE REPAIRS, INCLUDING PAINTING, SHALL BE COMPLETED WITH AT LEAST ONE LANE OPEN AT ALL TIMES TO VEHICULAR TRAFFIC.
    B. BRIDGE TO BE ACCESSIBLE TO EMERGENCY VEHICLES ON DEMAND (3 MINUTES MAXIMUM WAIT TO CLOSE AND SECURELY LOCK DOWN BRIDGE). CONTRACTOR TO PROVIDE WRITTEN PLAN OF ACTION FOR ENGINEER'S APPROVAL.
    C. ALL EMERGENCY OPENING AND CLOSING COSTS SHALL BE INCIDENTAL TO PAY ITEM 102-1, MAINTENANCE OF TRAFFIC.
    NOTIFY LEE COUNTY 2 WEEKS IN ADVANCE PRIOR TO ANY BRIDGE CLOSURES.
    ALL REQUESTS FOR BRIDGE CLOSURE REQUIRE THE ENGINEER'S APPROVAL.

13. ALL LABOR, MATERIAL AND EQUIPMENT NECESSARY TO PROPERLY MAINTAIN TRAFFIC WILL BE INCLUDED IN PAY ITEM 102-1, MAINTENANCE OF TRAFFIC, LUMP SUM. A SEPARATE LUMP SUM QUANTITY IS REQUIRED FOR EACH BRIDGE.

BRIDGE BALANCING:

1. THE CONTRACTOR IS RESPONSIBLE FOR THE STABILITY AND STRUCTURAL INTEGRITY OF THE BRIDGE AND SHALL MAINTAIN SPAN BALANCE THROUGHOUT THE COURSE OF THE REPAIR WORK. ALL INTERIM WORK TO MAINTAIN SPAN BALANCE SHALL BE INCIDENTAL TO THE INDIVIDUAL REPAIR PAY ITEMS.

2. THE CONTRACTOR SHALL PERFORM A BASCULE BRIDGE COUNTERWEIGHT BALANCE ON EACH BRIDGE AFTER ALL REPAIRS AND PAINTING HAVE BEEN COMPLETED.

3. THE CONTRACTOR SHALL PROVIDE A SCOPE OF WORK FOR PERFORMING THE BASCULE BRIDGE COUNTERWEIGHT BALANCE AND PROVIDE ALL APPPLICABLE SHOP DRAWINGS TO BE APPROVED BY THE ENGINEER. THE COUNTERWEIGHT BALANCE SHALL INCORPORATE THE USE OF STRAIN GAGES TO MEASURE TORSIONIAL STRESSES TO DETERMINE COUNTERWEIGHT CENTER OF GRAVITY AND DEGREE OF IMBALANCE. A FINAL REPORT SUMMARIZING THE BALANCE TESTS AND PROPOSED METHODS TO ACHIEVE FINAL SPAN BALANCE SHALL BE SUBMITTED TO THE ENGINEER FOR APPROVAL.

4. THERE ARE APPROXIMATELY 250 EXISTING COUNTERWEIGHT ADJUSTING BLOCKS LOCATED IN THE MATLACHA DRAW BRIDGE MACHINERY ROOM. THE CONTRACTOR SHALL SUPPLY ANY ADDITIONAL BLOCKS AS NECESSARY TO MAINTAIN SPAN BALANCE ON EACH BRIDGE. REFER TO THE ORIGINAL BRIDGE PLANS FOR BLOCK DETAILS. THE COST OF FABRICATING AND INSTALLING ALL BLOCKS SHALL BE INCIDENTAL TO THE INDIVIDUAL REPAIR PAY ITEMS OR THE FINAL BRIDGE BALANCING AS REQUIRED.

4. PAY ITEM 460-121-50, COUNTERWEIGHT MOVABLE BRIDGE BALANCE (LS), TO INCLUDE THE FOLLOWING:
   A. CLEANING OUT COUNTERWEIGHT
   B. PERFORMING COUNTERWEIGHT BALANCE
   C. PROVIDING AND PLACING COUNTERWEIGHT ADJUSTING BLOCKS AS REQUIRED TO ACHEIVE BALANCING.

SUBMITTALS:

THE CONTRACTOR SHALL SUBMIT DETAILED SHOP DRAWINGS AND/OR MANUFACTURER'S LITERATURE FOR ALL NEW STRUCTURAL, MECHANICAL, AND ELECTRICAL COMPONENTS TO BECOME PART OF THE REHABILITATED STRUCTURE. SUCH DRAWINGS SHALL INCLUDE ALL DIMENSIONS, FITS, FINISHES, MATERIALS, AND SPECIAL INSTRUCTIONS REQUIRED TO PROPERLY CONSTRUCT, FABRICATE, AND INSTALL THESE COMPONENTS. FIELD VERIFIED DIMENSIONS SHALL BE SHOWN AND CLEARLY IDENTIFIED AS SUCH IN THE SHOP DRAWINGS. THE CONTRACTOR SHALL NOT ORDER MATERIALS UNTIL THE SHOP DRAWINGS AND/OR MANUFACTURER'S LITERATURE HAS BEEN APPROVED BY THE ENGINEER.

UTILITIES:

THE CONTRACTOR SHALL BE RESPONSIBLE FOR LOCATING ALL UTILITIES PRIOR TO COMMENCING WITH CONSTRUCTION. THE CONTRACTOR SHALL CONTACT SUNSHINE AT (800) 432-4770 AND ANY OTHER LOCAL UTILITIES TO VERIFY EXISTING UTILITIES AT SITE OF CONSTRUCTION. UTILITIES SHALL BE PROTECTED DURING ALL PHASES OF CONSTRUCTION. IF ANY EXISTING UTILITIES CONFLICT WITH PROPOSED CONSTRUCTION METHODS, MATERIALS, OR EQUIPMENT, THE CONTRACTOR SHALL NOTIFY THE ENGINEER.

POLLUTION CONTROL:

THE CONTRACTOR SHALL SUBMIT A POLLUTION CONTROL PLAN TO THE ENGINEER FOR APPROVAL PRIOR TO COMMENCING ANY CONSTRUCTION ACTIVITIES.

PAY ITEM NOTES:

1. QUANTITIES SHOWN FOR THE PAY ITEMS HAVE BEEN ESTIMATED FROM FIELD OBSERVATION AND INSPECTION REPORTS.

2. PAYMENT FOR INCIDENTAL ITEMS NOT SPECIFICALLY COVERED IN THE INDIVIDUAL BID ITEMS SHALL BE INCLUDED IN THE CONTRACT UNIT PRICE FOR BID ITEMS CONTAINED IN THIS CONTRACT.

SALVAGABLE EQUIPMENT:

1. THE CONTRACTOR SHALL BE RESPONSIBLE FOR DELIVERY OF THE FOLLOWING ITEMS TO LEE COUNTY MAINTENANCE:
   TRAFFIC GATE ASSEMBLIES (MATLACHA DRAW BRIDGE)
   TRAFFIC WARNING SIGNS AND SIGNALS (ALVA & BIG CARLOS DRAW BRIDGES)

2. THE CONTRACTOR SHALL REMOVE AND TRANSPORT THESE ITEMS IN A MANNER AS TO LIMIT SIGNIFICANT DAMAGE.

PLOT STATION TEXT

REVISION: 0 02/18/00 LFS

SCALE: 1/2

19805.03 GENNOTE.

REVISIONS					
Date	By	Description	Date	By	Description

	Names	Dates
Drawn by	LFS	02/00
Checked by	DBT	02/00
Designed by	—	—
Checked by	—	—
Approved by	LFS	2/18/00

ENGINEER OF RECORD:
Kisinger Campo and Associates Corp.
2203 N. LOIS AVE.
SUITE 1200
TAMPA, FLORIDA 33607

LOGO:

DEPARTMENT OF TRANSPORTATION

SHEET TITLE: GENERAL NOTES (2 OF 2)

PROJECT NAME: ALVA, BIG CARLOS, & MATLACHA BASCULE BRIDGE REPAIR

Drawing N

Index No

BX1-72

BX1-72

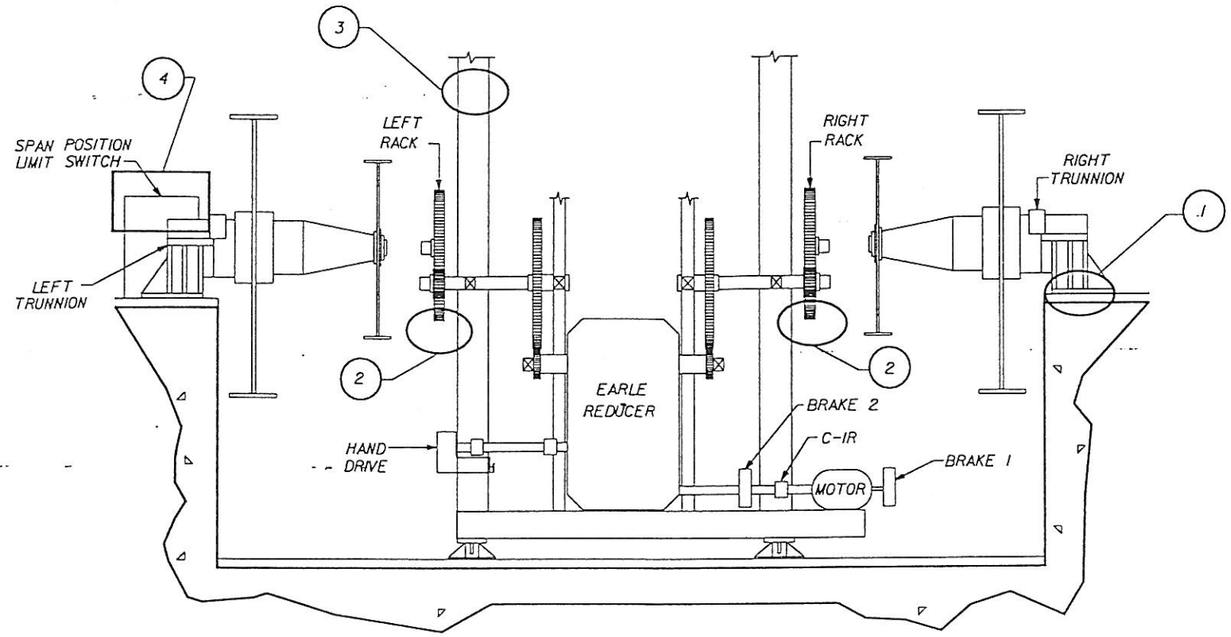

MACHINERY ROOM ELEVATION
ALVA, BIG CARLOS & MATALCHA DRAW BRIDGES
(LOOKING AWAY FROM CHANNEL)

WORK IDENTIFICATION:

ALVA DRAW BRIDGE

1 REPLACE CORRODED NUTS ON TRUNNION ANCHOR BOLTS. REFER TO SHEET B-21 FOR DETAILS.

BIG CARLOS DRAW BRIDGE

1 REPLACE CORRODED NUTS ON TRUNNION ANCHOR BOLTS. REFER TO SHEET B-21 FOR DETAILS.

2 REPLACE OPEN RACK MOUNTING BOLTS. REFER TO SHEET B-21 FOR DETAILS.

4 REPLACE COUPLING SPIDER, REALIGN SPAN POSITION LIMIT SWITCH AND REPLACE SUPPORT FRAME. REFER TO SHEET M-3 FOR DETAILS.

MATLACHA DRAW BRIDGE

1 REPLACE CORRODED NUTS ON TRUNNION ANCHOR BOLTS. REFER TO SHEET B-21 FOR DETAILS.

2 REPLACE OPEN RACK MOUNTING BOLTS. REFER TO SHEET B-21 FOR DETAILS.

3 REPAIR FATIGUE CRACKS ON LEFT (NORTH) RACK GEAR SUPPORT FRAME. REFER TO SHEET B-25 FOR DETAILS.

19805.03 WORKID.DGN SCALE: 1:1 REVISION: 0 02/18/00 LFS

REVISIONS					
Date	By	Description	Date	By	Description

	Names	Dates
Drawn by	LFS	11/99
Checked by	DBT	11/99
Designed by	—	—
Checked by	—	—
Approved by	LFS	02/18/00

ENGINEER OF RECORD:
Kisinger Campo and Associates Corp.
2203 N. LOIS AVE.
SUITE 1200
TAMPA, FLORIDA 33607

LOGO: KCA

Lee COUNTY

DEPARTMENT OF TRANSPORTATION

SHEET TITLE: MACHINERY ROOM WORK IDENTIFICATION

PROJECT NAME: ALVA, BIG CARLOS & MATLACHA BASCULE BRIDGE REPAIR

Drawing

Index

BX1-74

****** PLOT STATION TEXT

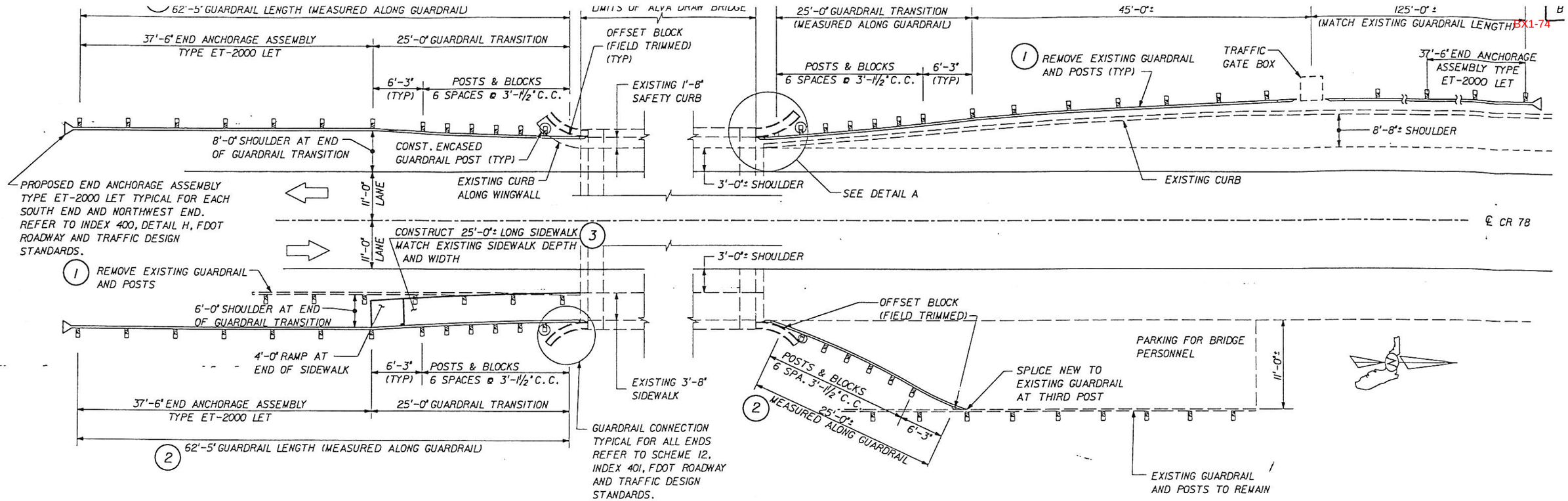

PLAN

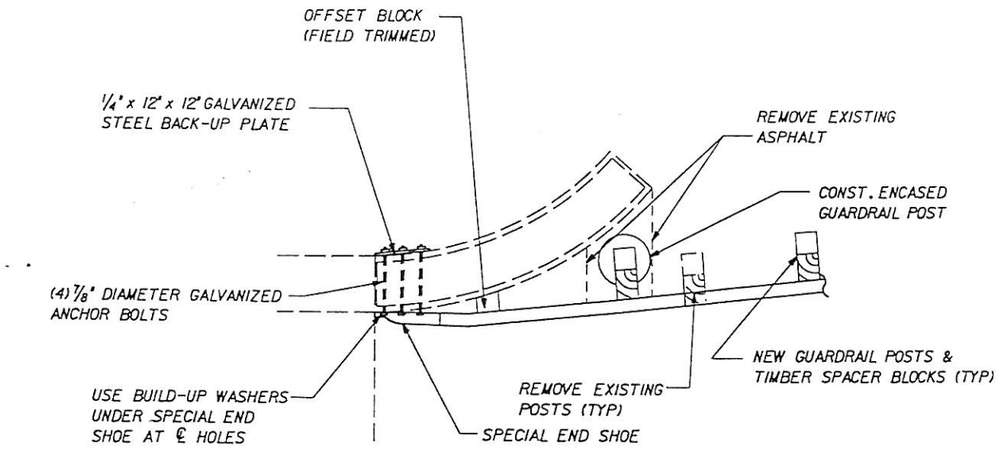

DETAIL A

WORK IDENTIFICATION:

1. REMOVE EXISTING GUARDRAIL AND POSTS AT SE CORNER AND AT NW COR
2. INSTALL NEW GUARDRAIL AT ALL FOUR CORNERS OF BRIDGE.
3. CONSTRUCT CAST-IN-PLACE SIDEWALK AT SE CORNER OF BRIDGE.

NOTES:

1. CONNECTION BETWEEN GUARDRAIL SPECIAL END SHOE AND THE WINGWALL SHALL HAVE A ¼" X 12" X 12" GALVANIZED STEEL BACK-UP PLATE FOR GANG TIGHTENING OF HEX NUTS ON ⅞" DIAMETER GALVANIZED ANCHOR BOLTS ACCORDING TO FDOT ROADWAY AND TRAFFIC DESIGN STANDARDS, INDEX 401.
2. ALL WORK ON THIS SHEET SHALL BE PAID UNDER PAY ITEM 536-8, BRIDGE ANCHORAGE ASSEMBLIES (LUMP SUM), INCLUDING:
   A. REMOVING EXISTING SECTION OF GUARDRAIL AND SPECIAL END SHOES AT SE AND NW CORNERS.
   B. FURNISHING AND INSTALLING NEW SPECIAL END SHOES, GUARDRAIL, GUARDRAIL POSTS, TIMBER FILLER BLOCKS AND ALL CONNECTORS.
   C. CONSTRUCTING CAST-IN-PLACE SIDEWALK. REFER TO FDOT ROADWAY AND TRAFFIC DESIGN STANDARDS, INDEX 310.
   D. DELIVERY OF EXISTING GUARDRAIL TO LEE COUNTY MAINTENANCE.
3. CONTRACTOR TO PROVIDE MAINTENANCE OF TRAFFIC FOR ALL WORK ON THIS SHEET. ALL COSTS ASSOCIATED WITH MAINTENANCE OF TRAFFIC SHALL BE INCLUDED IN THE LUMP SUM PAY ITEM 102-1 FOR THE ALVA DRAW BRIDGE.

19805.1 GUARDRAIL.DGN SCALE: ½" REVISION: 0 10/06/99 JCA

REVISIONS					
Date	By	Description	Date	By	Description

	Names	Dates
Drawn by	JCA	10/99
Checked by	LFS	10/99
Designed by	JAC	12/99
Checked by	LFS	12/99
Approved by	[illegible]	12/12/99

ENGINEER OF RECORD:
Kisinger Campo and Associates Corp.
2203 N. LOIS AVE.
SUITE 1200
TAMPA, FLORIDA 33607

LOGO: KCA

Lee COUNTY

DEPARTMENT OF TRANSPORTATION

SHEET TITLE: GUARDRAIL END RETROFIT ALVA DRAW BRIDGE

PROJECT NAME: ALVA, BIG CARLOS & MATLACHA BASCULSE BRIDGE REPAIR

BX1-74

PLOT STATION TEXT

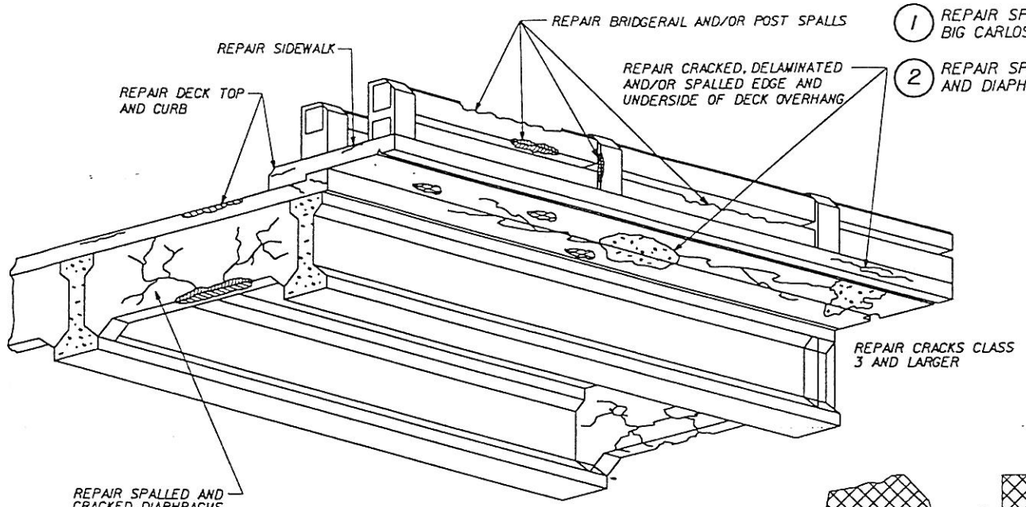

TYPICAL SUPERSTRUCTURE DEFICIENCIES

MATLACHA DRAW BRIDGE SHOWN
ALVA & BIG CARLOS DRAW BRIDGES SIMILAR

(1) REPAIR SPALLS IN PEDESTRIAN/TRAFFIC RAILING. CUBS & POSTS ON THE ALVA, BIG CARLOS & MATLACHA DRAW BRIDGES.

(2) REPAIR SPALLS IN DECK TOP & UNDERSIDE, OVERHANG END & UNDERSIDE, AND DIAPHRAGMS ON THE MATLACHA DRAW BRIDGE.

LAP SPLICE TABLE	
REBAR SIZE	LAP SPLICE LENGTH
BARS 4 THRU 6	24 TIMES BAR DIAMETER
7	28 TIMES BAR DIAMETER
8	32 TIMES BAR DIAMETER
9	36 TIMES BAR DIAMETER
10	41 TIMES BAR DIAMETER
11	45 TIMES BAR DIAMETER

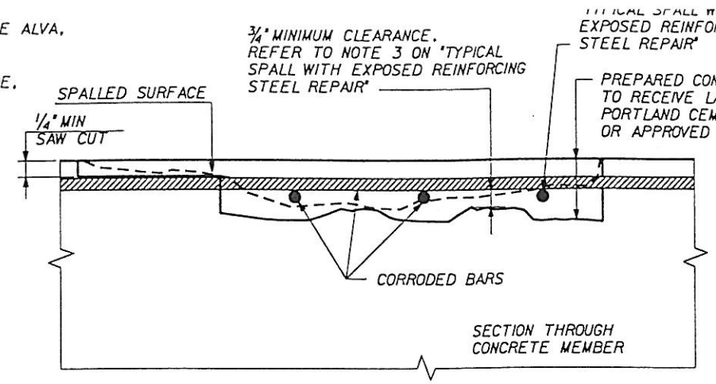

EXPOSING AND UNDERCUTTING REINFORCING STEEL

APPLICABLE TO HORIZONTAL, VERTICAL, AND OVERHEAD LOCATIONS

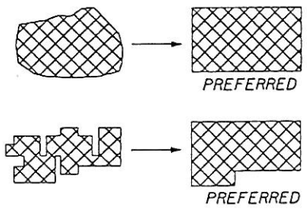

SIMPLE PATCH CONFIGURATION

SAW CUT SO THAT CORNER LOCATIONS HAVE RIGHT ANGLES. PATCH CONFIGURATIONS SHALL BE KEPT AS SIMPLE AS POSSIBLE.

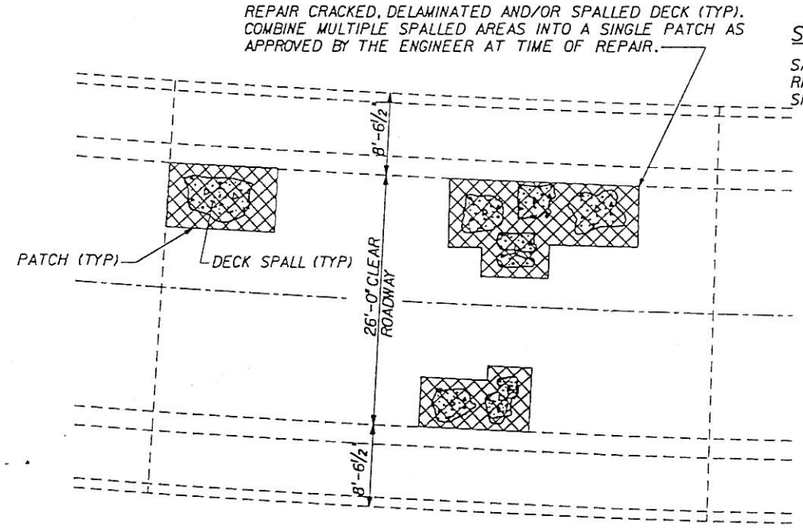

PARTIAL PLAN VIEW

MATLACHA DRAW BRIDGE

TYPICAL CRACK REPAIR METHOD

1. REMOVE UNSOUND CONCRETE FROM CRACK AREA.
2. DRILL HOLES FOR EPOXY INJECTION AND FOR AIRVENTING. SEAL EXPOSED CRACK SURFACES IN ACCORDANCE WITH SECTION 411 OF THE STANDARD SPECIFICATIONS.
3. INJECT EPOXY INTO CRACK. WHEN MATERIAL EXTRUDES FROM VENT HOLES, STOP OPERATIONS AND ALLOW FOR CURING.
4. APPLY CLASS II FINISH AT CRACK REPAIR TO REMOVE FINS OR KNOBS. APPLY MATCHING FINISH, TEXTURE AND COLOR AS THE EXISTING FININSH, IN ACCORDANCE WITH THE SPECIFICATIONS.
5. CRACK INJECTION WORK SHALL BE PAID UNDER PAY ITEM NO. 400-135, INJECT AND SEAL CRACKS (PER LINEAR FOOT). ESTIMATED QUANTITY FOR BIDDING PURPOSES = 200 LF.

TYPICAL SPALL REPAIR METHOD

1. REMOVE UNSOUND CONCRETE FROM SPALL OR DELAMINATED AREA (NO JACK HAMMERS).
2. PREPARE SURFACE FOR THE LATEX ADMIXTURE OR AN ALTERNATIVE (SHOWN ON SHEET B-3) IN ACCORDANCE WITH MANUFACTURER'S RECOMMENDATIONS AND THE SPECIFICATIONS.
3. APPLY LATEX MODIFIED PORTLAND CEMENT CONCRETE OR AN ALTERNATIVE (SHOWN ON SHEET B-3) TO SPALL.
4. APPLY MATCHING FINISH, TEXTURE AND COLOR AS THE EXISTING FINISH, IN ACCORDANCE WITH THE SPECIFICATIONS.

CONCRETE SPALL REPAIR ESTIMATED QUANTITIES

MATLACHA DRAW BRIDGE	
LOCATION	CUBIC FEET
DECK TOP	450
CURB, SIDEWALK & RAILING	100
DECK UNDERSIDE & DIAPHRAGMS	100
ALVA DRAW BRIDGE	
LOCATION	CUBIC FEET
CURB, SIDEWALK & RAILING	10
BIG CARLOS DRAW BRIDGE	
LOCATION	CUBIC FEET
CURB, SIDEWALK & RAILING	40
	TOTAL = 700 CU. FT.

TYPICAL SPALL WITH EXPOSED REINFORCING STEEL REPAIR

1. REMOVE UNSOUND CONCRETE FROM CRACK/SPALL AREA (NO JACK HAMMERS). SAW CUT THE PERIMETER.
2. REMOVE ANY LOOSE OR DELAMINATED CONCRETE ABOVE CORRODED REINFORCING STEEL. ONCE INITIAL REMOVALS ARE MADE, PROCEED WITH THE UNDERCUTTING OF ALL EXPOSED BARS. UNDERCUT TO PROVIDE CLEARANCE FOR UNDER BAR CLEANING, FULL BAR CIRCUMFERENCE BONDING TO SURROUNDING CONCRETE, AND TO SECURE THE PATCH STRUCTURALLY.
3. PROVIDE MINIMUM 3/4" CLEARANCE BETWEEN EXPOSED REBARS AND SURROUNDING CONCRETE OR 1/4" LARGER THAN LARGEST AGGREGATE IN REPAIR MORTAR, WHICHEVER IS GREATER.
4. CONCRETE REMOVALS SHALL EXTEND ALONG THE BARS TO LOCATIONS ALONG THE BAR FREE OF BOND INHIBITING CORROSION, AND WHERE THE BAR IS WELL BONDED TO SURROUNDING CONCRETE.
5. IF REINFORCING STEEL IS EXPOSED DURING THE UNDERCUTTING PROCESS, CARE SHALL BE TAKEN NOT TO DAMAGE THE BAR'S BOND TO SURROUNDING CONCRETE. IF BOND BETWEEN BAR AND CONCRETE IS BROKEN, UNDERCUTTING OF THE BAR SHALL BE REQUIRED.
6. ANY REINFORCEMENT WHICH IS LOOSE SHALL BE SECURED IN PLACE BY TYING TO OTHER SECURED BARS OR BY OTHER METHODS APPROVED BY THE ENGINEER.
7. CLEAN EXPOSED REBARS BY SANDBLASTING (COMMERCIAL GRADE) AND REMOVE ANY RUST SCALE, LOOSE CONCRETE, OR ABRASIVES, AND PROPERLY CONTAIN AND DISPOSE OF ALL WASTE.
8. ANY REINFORCING STEEL BAR WITH MORE THAN 25% LOSS OF DIAMETER SHALL BE REINFORCED BY ADDING AN ADDITIONAL REINFORCING STEEL BAR. CONCRETE SHALL BE REMOVED FROM THE EXISTING BAR FOR SUFFICIENT LENGTH TO ALLOW FOR A LAP SPLICE AT EACH END OF THE DETERIORATED SECTION OF BAR. THE MINIMUM LAP SPLICE SHALL BE AS SHOWN IN THE TABLE. THE ADDITIONAL REINFORCING BAR SHALL BE THE SAME SIZE AS THE ORIGINAL BAR.
9. PREPARE SURFACES FOR LATEX ADMIXTURE OR AN APPROVED ALTERNATIVE (SHOWN ON SHEET B-3) IN ACCORDANCE WITH MANUFACTURER'S RECOMMENDATIONS AND THE SPECIFICATIONS.
10. APPLY LATEX MODIFIED PORTLAND CEMENT CONCRETE OR AN ALTERNATIVE SHOWN ON SHEET B-3 TO SPALL.
11. THE SURFACE OF THE PATCH SHALL BE FINISHED TO CONFORM TO THE TEXTURE AND COLOR OF THE EXISTING SURFACE. ALLOW ADEQUATE CURING TIME IN ACCORDANCE WITH MANUFACTURER'S RECOMMENDATIONS PRIOR TO APPLICATION OF PAINT OR OTHER COATING.
12. THE WORK DESCRIBED ON THIS SHEET FOR SPALL REPAIRS SHALL BE PAID UNDER PAY ITEM NO. 405-70-1, LATEX MODIFIED PORTLAND CEMENT CONCRETE (PER CUBIC FOOT).

GENERAL NOTE:

DEFICIENCIES SHOWN ARE FOR ILLUSTRATION ONLY, ALL DIMENSIONS ARE APPROXIMATE. IN THE PRESENCE OF THE ENGINEER, THE CONTRACTOR SHALL CLEARLY OUTLINE ALL AREAS IN NEED OF REPAIR WITH AN APPROVED PAINT OR MARKER PRIOR TO DEMOLITION. NO DEMOLITION OF ANY AREA OR MEMBER OF THE BRIDGE SHALL BE PERFORMED UNTIL THE CONTRACTOR RECEIVES APPROVAL FROM THE ENGINEER.

SUPERA... DGN | SCALE: 1/4 | REVISION: 0 | 02/18/00 LFS

REVISIONS					
Date	By	Description	Date	By	Description

	Names	Dates
Drawn by	DEL	12/99
Checked by	LFS	12/99
Designed by	LFS	12/99
Checked by	DBT	12/99
Approved by	LFS	02/18/00

ENGINEER OF RECORD:
Kisinger Campo and Associates Corp.
2203 N. LOIS AVE.
SUITE 1200
TAMPA, FLORIDA 33607

LOGO: KCA

LEE COUNTY

ALVA, BIG CARLOS, & MATLACHA BASCULE BRIDGE REPAIR PLANS

SHEET TITLE: CONCRETE REPAIR DETAILS

Drawing

PROJECT NAME: ALVA, BIG CARLOS & MATLACHA BASCULE BRIDGE REPAIR

Index

BX1-76

BX1-76

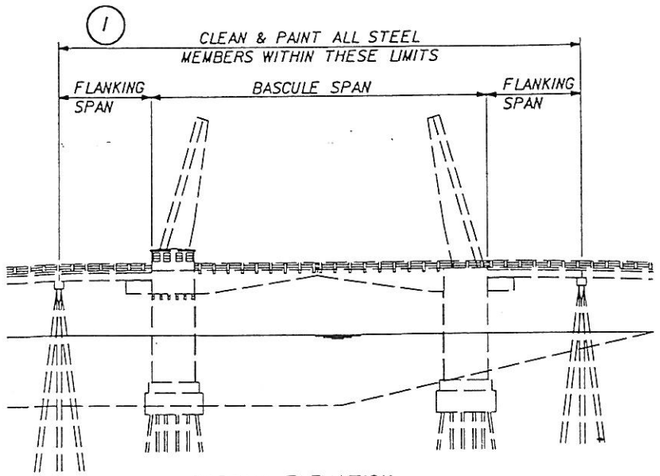

PARTIAL ELEVATION
ALVA DRAW BRIDGE

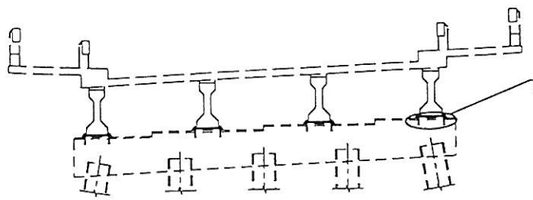

TYPICAL SECTION
SPANS 1-3, 5, 7-11

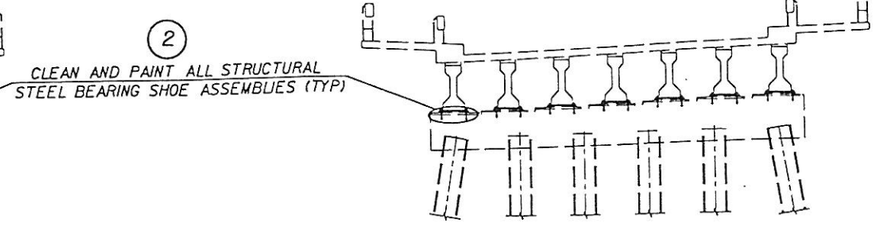

TYPICAL SECTION
SPAN 4

MATLACHA DRAW BRIDGE

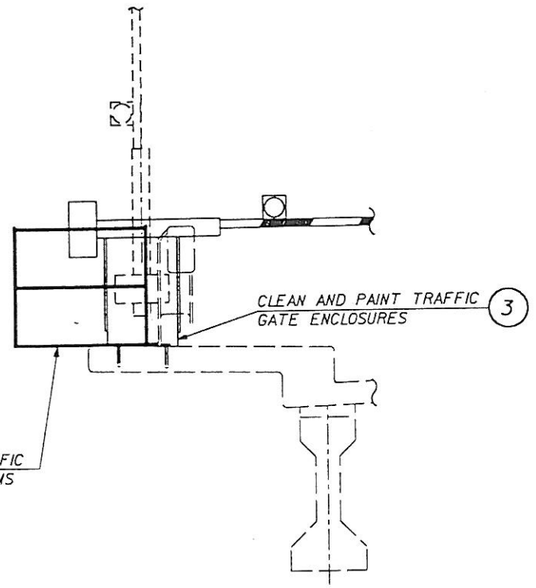

PARTIAL CROSS SECTION AT
TRAFFIC GATE AND PLATFORM

ALVA AND BIG CARLOS DRAW BRIDGES

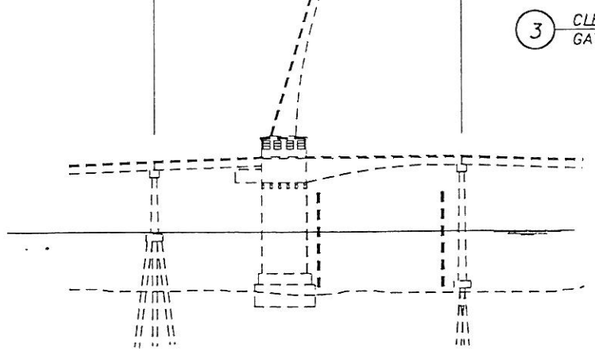

PARTIAL ELEVATION
BIG CARLOS AND MATLACHA DRAW BRIDGES

WORK IDENTIFICATION:

1. CLEAN AND PAINT STEEL AND MACHINERY ON THE ALVA, BIG CARLOS & MATLACHA DRAW BRIDGES.
2. CLEAN AND PAINT ALL EXPOSED STEEL BEARING SHOE ASSEMBLIES ON THE APPROACH SPANS OF THE MATLACHA DRAW BRIDGE.
3. CLEAN AND PAINT STEEL TRAFFIC GATE ENCLOSURES AND PLATFORMS ON THE ALVA & BIG CARLOS DRAW BRIDGES.

NOTES:

1. PAINTING TO INCLUDE ALL STEEL (INCLUDING LADDERS AND PLATFORMS) AND MACHINERY WITHIN THE STEEL SPANS (BASCULE AND FLANKING) OF EACH BRIDGE. ALL EXPOSED STRUCTURAL STEEL BEARING SHOE ASSEMBLIES FOR EACH TYPE III PRESTRESSED BEAM ON THE APPROACH SPANS FOR THE MATLACHA DRAW BRIDGE, AND ALL EXPOSED STEEL ON THE TRAFFIC GATE ENCLOSURES AND ACCESS PLATFORMS ON THE ALVA & BIG CARLOS DRAW BRIDGES.
2. DO NOT PAINT THE TOP SIDE OF THE STEEL FLOOR GRATING. PAINT THE UNDERSIDE OF THE STEEL FLOOR GRATING ON THE ALVA DRAW BRIDGE ONLY. DO NOT PAINT THE UNDERSIDE OF THE STEEL FLOOR GRATING ON THE BIG CARLOS OR MATLACHA DRAW BRIDGES EXCEPT AS NOTED IN THE GENERAL NOTES (SHEET B-3), PAINTING NOTE 3.
3. PAINTING SHALL CONFORM TO SECTION 560 OF THE SPECIFICATIONS - MAINTENANCE PAINTING OF STRUCTRUAL STEEL AND THE SPECIAL PROVISIONS TO THE STANDARD SPECIFICATIONS.
4. REFER TO EXISTING BRIDGE PLANS FOR ADDITIONAL INFORMATION REGARDING FRAMING PLAN, STRUCTURAL STEEL DETAILS, AND STEEL BEARING SHOE ASSEMBLY DETAILS.
5. TESTS INDICATE THAT THE MATLACHA AND ALVA DRAW BRIDGES CONTAIN LEAD BASED PAINT. EXISTING PAINT TO BE REMOVED IN ACCORDANCE WITH THE TECHNICAL SPECIFICATIONS.
6. CONTRACTOR TO SUBMIT POLLUTION CONTROL PLAN TO BE APPROVED BY THE ENGINEER. CONTAINMENT METHODS TO BE IN ACCORDANCE WITH F.D.O.T. STANDARD SPECIFICATIONS AND SUPPLEMENTS THERETO.
7. FLORIDA DEPARTMENT OF ENVIRONMENTAL PROTECTION TO BE NOTIFIED OF SCHEDULE PRIOR TO COMMENCEMENT OF WORK.
8. THE COST OF REMOVING THE EXISTING PAINT AND PAINTING THE STRUCTURE AS DESCRIBED ON THIS SHEET AND IN THE SPECIFICATIONS SHALL BE PAID FOR UNDER PAY ITEM 560-1, MAINTENANCE PAINTING OF STRUCTURAL STEEL, LUMP SUM, AND SHALL INCLUDE THE REMOVAL AND DISPOSAL OF HAZARDOUS MATERIALS. A SEPARATE LUMP SUM QUANTITY IS REQUIRED FOR EACH BRIDGE.

19805.03 PAINTSTL.DGN SCALE: 3/16 REVISION: 0 02/18/00 LFS

REVISIONS					
Date	By	Description	Date	By	Description

	Names	Dates
Drawn by	JEC	10/99
Checked by	LFS	10/99
Designed by	LFS	10/99
Checked by	DBT	12/99
Approved by	LFS	02/18/00

ENGINEER OF RECORD:
Kisinger Campo and Associates Corp.
2203 N. Lois Ave.
Suite 1200
Tampa, Florida 33607

LOGO: KCA

Lee County

DEPARTMENT OF TRANSPORTATION

SHEET TITLE: MAINTENANCE PAINTING OF STRUCTURAL STEEL

PROJECT NAME: ALVA, BIG CARLOS, & MATLACHA BASCULE BRIDGE REPAIR

Drawin

Index

BX1-76

BX1-76

BX1-77

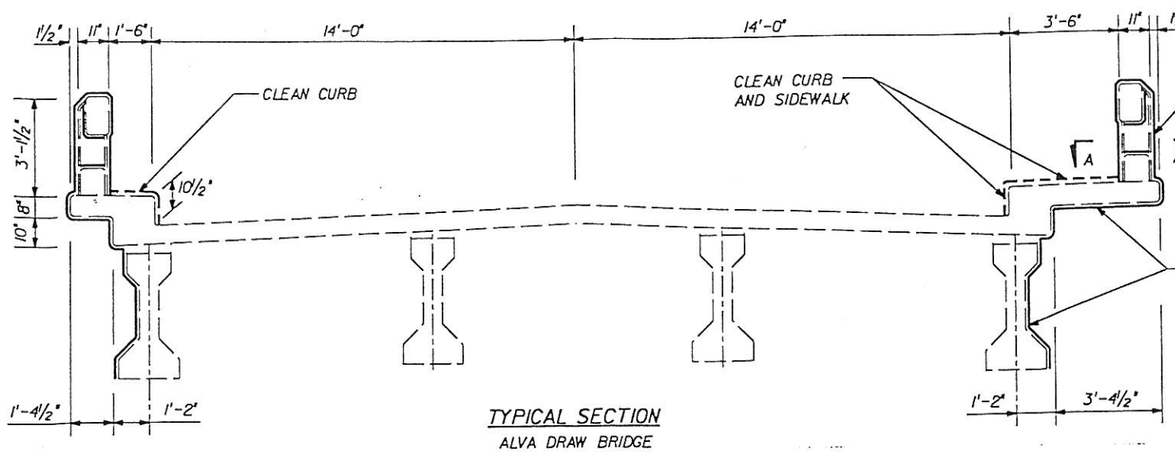

TYPICAL SECTION
ALVA DRAW BRIDGE

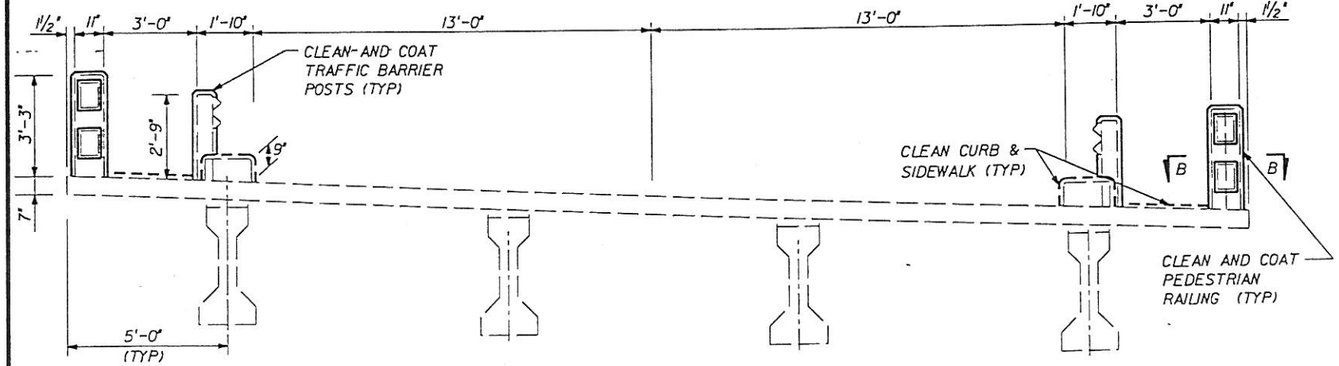

TYPICAL SECTION
BIG CARLOS DRAW BRIDGE

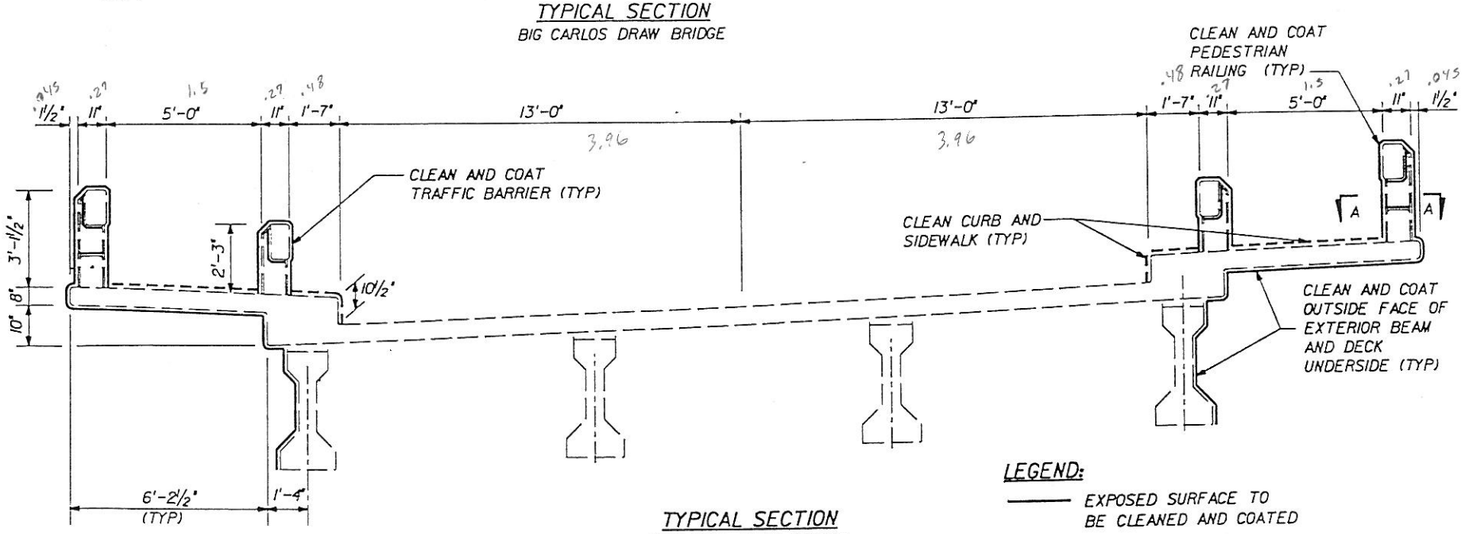

TYPICAL SECTION
MATLACHA DRAW BRIDGE

ESTIMATED QUANTITIES (SF)		
DRAW BRIDGE NAME	CLEANING & COATING PAY ITEM 400-143	CLEANING ONLY PAY ITEM 400-145
ALVA	14100	3500
BIG CARLOS	21000	18200
MATLACHA	18000	9600

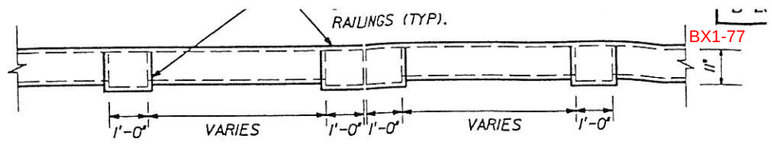

SECTION A-A

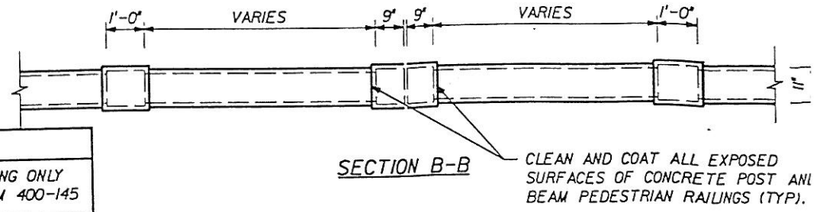

SECTION B-B

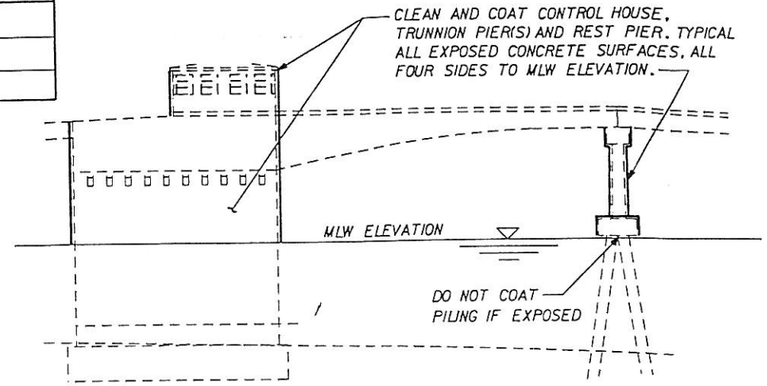

PARTIAL ELEVATION OF CONTROL HOUSE, TRUNNION PIER & REST PIER
MATLACHA DRAW BRIDGE SHOWN (REST PIER 6 AND TRUNNION PIER 7)
ALVA DRAW BRIDGE SIMILAR (TRUNNION PIERS 7 & 8)

WORK IDENTIFICATION:

CLEAN (PRESSURIZED WATER) OR CLEAN AND COAT (CLASS 5 APPLIED FINISH COATING) EXPOSED CONCRETE SURFACES AS DETAILED ON THIS SHEET FOR THE ALVA, BIG CARLOS & MATLACHA DRAW BRIDGES.

NOTES:

1. CLEAN ALL SURFACES INDICATED BY UTILIZING PRESSURIZED POTABLE WATER OF SUFFICIENT PRESSURE TO REMOVE DIRT, OIL, GREASE, SALTS AND OTHER FOREIGN OR LOOSE MATERIAL. ALLOW SURFACES TO COMPLTELY DRY (48 HRS. MIN.). ALL CLEANED SURFACES SHALL BE "BLOWN DOWN" WITH PRESSURIZED AIR (80 TO 100 PSI) PRIOR TO COATING.
2. APPLY A CLASS 5 APPLIED FINISH COATING TO ALL EXPOSED SURFACES AS INDICATED IN CROSS SECTIONS FOR THE FULL LENGTH OF THE ALVA, BIG CARLOS AND MATLACHA DRAW BRIDGES. INCLUDE THE FOLLOWING EXPOSED CONCRETE SURFACES:
   - ALVA DRAW BRIDGE - TRAFFIC BARRIERS, OUTSIDE FACE OF EXTERIOR BEAMS, OUTSIDE FACE OF EXTE DECK UNDERSIDE AND ALL FOUR SIDES OF BOTH TRUNNION PIERS 7 & 8.
   - BIG CARLOS DRAW BRIDGE - TRAFFIC & PEDESTRIAN BARRIERS.
   - MATLACHA DRAW BRIDGE - TRAFFIC & PEDESTRIAN BARRIERS, OUTSIDE FACE OF EXTERIOR BEAMS, OUTS FACE OF EXTERIOR DECK UNDERSIDE AND ALL FOUR SIDES OF REST PIER 6 AND TRUNNION PIER 7.

   NOTE: DO NOT COAT CURBS AND SIDEWALKS.
3. PROTECT ALL MARKINGS, BRIDGE NUMBERS, REFLECTORS, WINDOWS, DOORS, OTHER COATINGS AND ALL ATTACHMENTS SUCH AS GUARDRAIL, HANDRAIL, LIGHTS, CONDUIT, SIGNING, ETC. COSTS OF PROTECTION TO BE INCIDENTAL TO THE PAY ITEMS.
4. PAY ITEM 400-143, CLEANING AND COATING OF CONCRETE SURFACES (SF), TO INCLUDE ALL COSTS ASSOCIATED WITH THE PREPARATION, INCLUDING PRESSURE WASHING, AND APPLICATION OF CLASS 5 APPLIED FINISH COATING AS DESCRIBED ON THIS SHEET. A SEPARATE QUANTITY IS REQUIRED FOR EACH BRIDGE.
5. PAY ITEM 400-145, CLEANING CONCRETE SURFACES (SF), TO INCLUDE ALL COSTS ASSOCIATED WITH PRESSURE WASHING CONCRETE SURFACES AS DETAILED ON THIS SHEET. THE QUANTITY FOR THIS PAY ITEM IS FOR CONCRETE SURFACES THAT WILL BE CLEANED ONLY. A SEPARATE QUANTITY IS REQUIRED FOR EACH BRIDGE.

LEGEND:

——— EXPOSED SURFACE TO BE CLEANED AND COATED

- - - - EXPOSED SURFACE TO BE CLEANED ONLY

REVISIONS					
Date	By	Description	Date	By	Description

	Names	Dates
Drawn by	DEC	10/99
Checked by	LFS	10/99
Designed by	DEC	12/99
Checked by	LFS	12/99
Approved by	LFS	02/18/00

ENGINEER OF RECORD:
Kisinger Campo and Associates Corp.
2203 N. LOIS AVE.
SUITE 1200
TAMPA, FLORIDA 33607

LOGO:

DEPARTMENT OF TRANSPORTATION

SHEET TITLE: CLEANING AND COATING OF CONCRETE SURFACES

PROJECT NAME: ALVA, BIG CARLOS, & MATLACHA BASCULE BRIDGE REPAIR

Drawi

Inde

19805.03 PAINTCTE.DGN SCALE: 1½ REVISION: 0 02/18/00 LFS

BX1-77

PLOT STATION TEXT

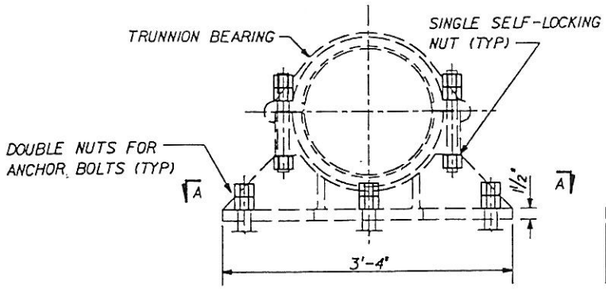

END VIEW

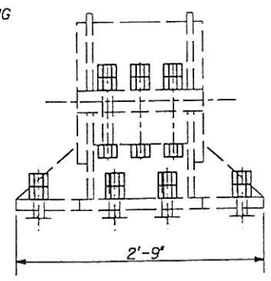

ELEVATION

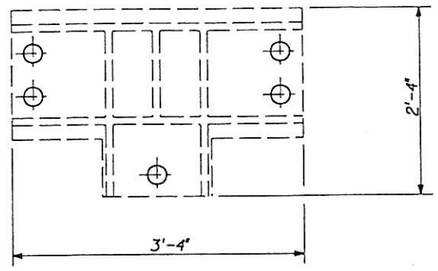

SECTION A-A

(1) TRUNNION BEARING ANCHOR BOLT NUT REPLACEMENT

NOTES:

1. REPLACE ANCHOR BOLT NUTS WITH 20% OR MORE SECTION LOSS AS DIRECTED BY THE ENGINEER AT THE TIME OF REPAIR.
2. REMOVE EXISTING CORRODED ANCHOR BOLT NUTS WITHOUT DAMAGING THE EXISTING THREADS. CLEAN THREADS OF SCALE AND CORROSION AND LUBRICATE. REMOVE CORRODED NUTS FROM ONLY ONE (1) ANCHOR BOLT AT A TIME AND INSTALL NEW NUTS BEFORE REMOVING CORRODED NUTS FROM THE NEXT ANCHOR BOLT.
3. REPLACE EXISTING CORRODED NUT WITH EITHER DOUBLE HEAVY HEX NUTS OR SINGLE SELF-LOCKING NUT AS NECESSARY. MATCH EXISTING ANCHOR BOLT DIAMETER FOR NEW NUTS. TENSION ACCORDING TO THE SPECIFICATIONS.
4. PAY ITEM 460-95, STRUCTURAL STEEL REPAIR (PER LB), SHALL INCLUDE ALL WORK DESCRIBED ABOVE FOR THE REMOVAL OF EXISTING NUT AND INSTALLATION OF NEW NUT(S). ESTIMATED QUANTITY FOR BIDDING PURPOSES = 100 LBS.

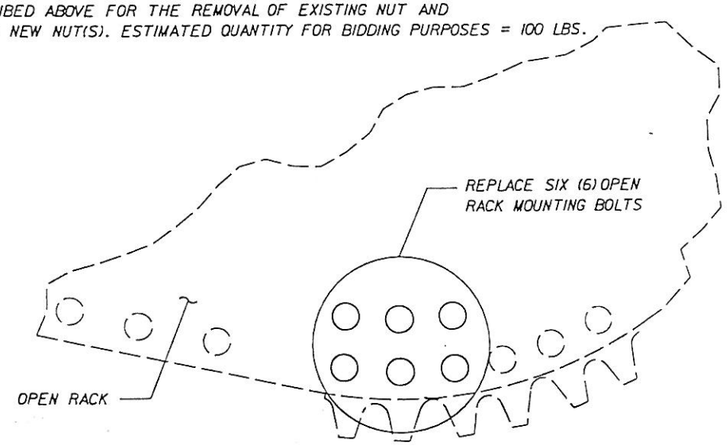

PARTIAL ELEVATION OF OPEN RACK
LEFT OPEN RACK OUTSIDE FACE SHOWN
RIGHT RACK OPPOSITE HAND

(2) OPEN RACK BOLT REPLACEMENT

NOTES:

1. REPLACE THE SIX (6) CORRODED OPEN RACK MOUNTING BOLTS AS SHOWN ABOVE IN THE LEFT AND RIGHT RACKS ON THE BIG CARLOS AND MATLACHA DRAW BRIDGES. TOTAL QUANTITY TO BE REPLACED = 24 BOLTS.
2. ALL BOLTS SHALL BE ASTM-A325 HIGH STRENGTH BOLT W/ HARDENED WASHERS AND HEAVY HEX NUTS. BOLT DIAMETER AND LENGTH TO BE DETERMINED BY CONTRACTOR AND APPROVED BY THE ENGINEER.
3. REMOVE ONE (1) BOLT ONLY AT A TIME AND INSTALL NEW BOLT BEFORE REMOVING THE NEXT BOLT. BOLTS TO BE PROPERLY LUBRICATED AND TENSIONED ACCORDING TO THE SPECIFICATIONS.
4. CLEAN AND PAINT NEW BOLTS AND IMMEDIATE AREA OF RACK ACCORDING TO THE SPECIFICATIONS AFTER COMPLETION OF REPAIR.
5. PAY ITEM 460-81, HIGH STRENGTH BOLT REPLACEMENT (EA), SHALL INCLUDE ALL WORK DESCRIBED ABOVE FOR THE REMOVAL OF EXISTING BOLT AND INSTALLATION OF NEW BOLT AS DETAILED ABOVE.

WORK IDENTIFICATION:

(1) REPLACE TRUNNION BEARING ANCHOR BOLT NUTS W/ 20% OR GREATER SECTION LOSS (ALVA, BIG CARLOS & MATLACHA DRAW BRIDGES).

(2) REPLACE OPEN RACK MOUNTING BOLTS (BIG CARLOS & MATLACHA DRAW BRIDGES).

(3) REPLACE RIVETS OR BOLTS AND NUTS W/ 20% OR GREATER SECTION LOSS (BIG CARLOS & MATLACHA DRAW BRIDGES).

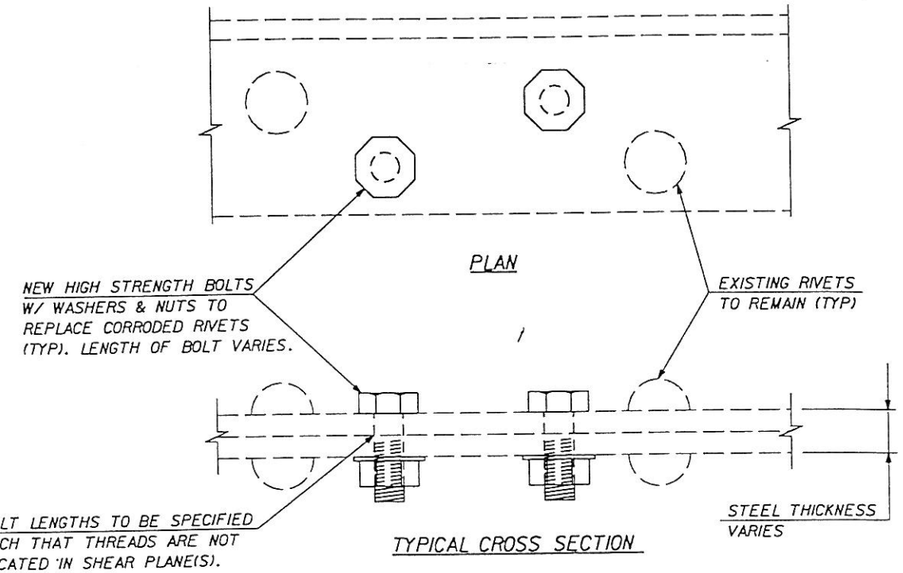

TYPICAL CROSS SECTION

(3) RIVET REPLACEMENT WITH HIGH STRENGTH BOLT

NOTES:

1. REPLACE ALL RIVETS OR BOLTS AND NUTS WITH 20% OR GREATER SECTION LOSS AS DIRECTED BY THE ENGINEER AT TIME OF REPAIR.
2. REMOVE THE DAMAGED RIVET HEAD BY MECHANICAL MEANS AND THEN MECHANICALLY EXTRACT RIVET. DO NOT USE A CUTTING TORCH WITHOUT THE ENGINEER'S APPROVAL. DRILL OR REAM TO PROVIDE A CLE BOLT HOLE.
3. INSTALL NEW HIGH STRENGTH BOLT (ASTM A325) WITH HARDENED WASHER AND HEAVY HEX NUT. BOLT DIAMETER IS TYPICALLY 7/8", HOWEVER, BOLT DIAMETER TO BE INCREASED AS NECESSARY TO PROVIDE MAXIMUM CLEARANCE OF 1/8" ON NEWLY DRILLED HOLE DIAMETER. BOLT LENGTHS TO BE APPROVED BY THE ENGINEER.
4. BOLTS SHALL BE PROPERLY LUBRICATED AND TENSIONED ACCORDING TO THE SPECIFICATIONS.
5. CLEAN AND PAINT NEW BOLT AND IMMEDIATE AREA OF REPAIR ACCORDING TO THE SPECIFICATIONS AFTE COMPLETION OF REPAIR.
6. PAY ITEM 460-81, RIVET OR HIGH STRENGTH BOLT REPLACEMENT (EA), SHALL INCLUDE ALL WORK DESCRIBED ABOVE FOR THE REMOVAL OF EXISTING RIVET OR BOLT AND INSTALLATION OF NEW BOLT (ESTIMATED QUANTITY FOR BIDDING PURPOSES = 900 EACH).

REVISIONS					
Date	By	Description	Date	By	Description

	Names	Dates
Drawn by	AEC	9/99
Checked by	LFS	9/99
Designed by	LFS	11/99
Checked by	DBT	12/99
Approved by	LFS	02/18/00

ENGINEER OF RECORD:
Kisinger Campo and Associates Corp.
2203 N. LOIS AVE.
SUITE 1200
TAMPA, FLORIDA 33607

LOGO: KCA

Lee COUNTY

DEPARTMENT OF TRANSPORTATION

SHEET TITLE: STRUCTURAL STEEL REPAIR DETAILS (1 OF 6)

PROJECT NAME: ALVA, BIG CARLOS & MATLACHA BASCULE BRIDGE REPAIR

Drawin

Index

19805.03 STRSTL.. SCALE: NI REVISION: 0 02/18/00 LFS

BX1-78

****** PLOT STATION TEXT ******

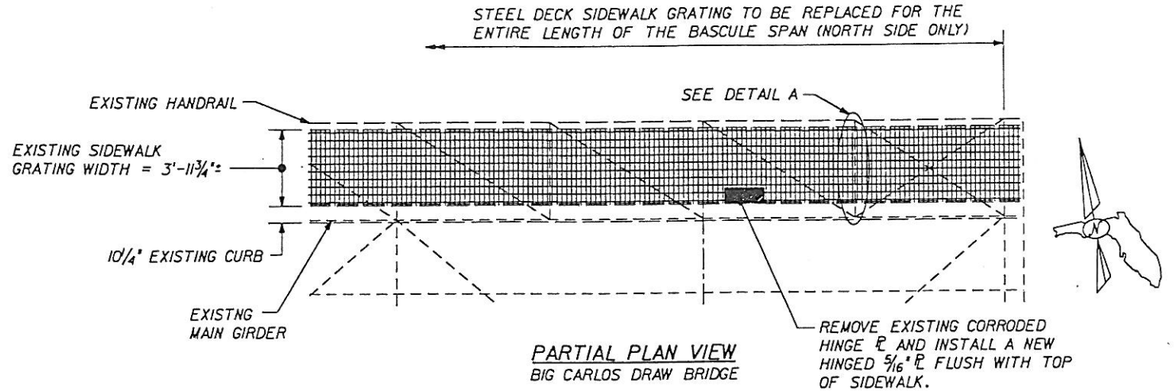

PARTIAL PLAN VIEW
BIG CARLOS DRAW BRIDGE

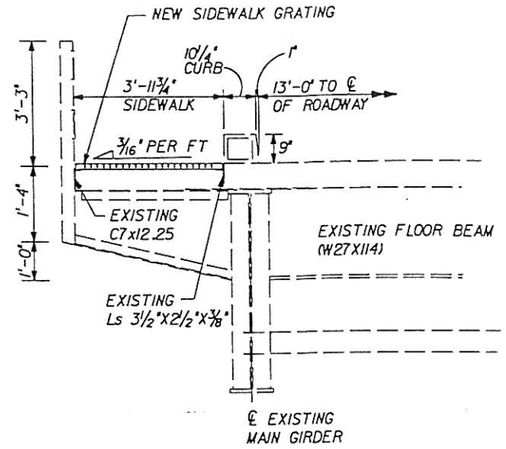

PARTIAL SIDEWALK ELEVATION
BIG CARLOS DRAW BRIDGE

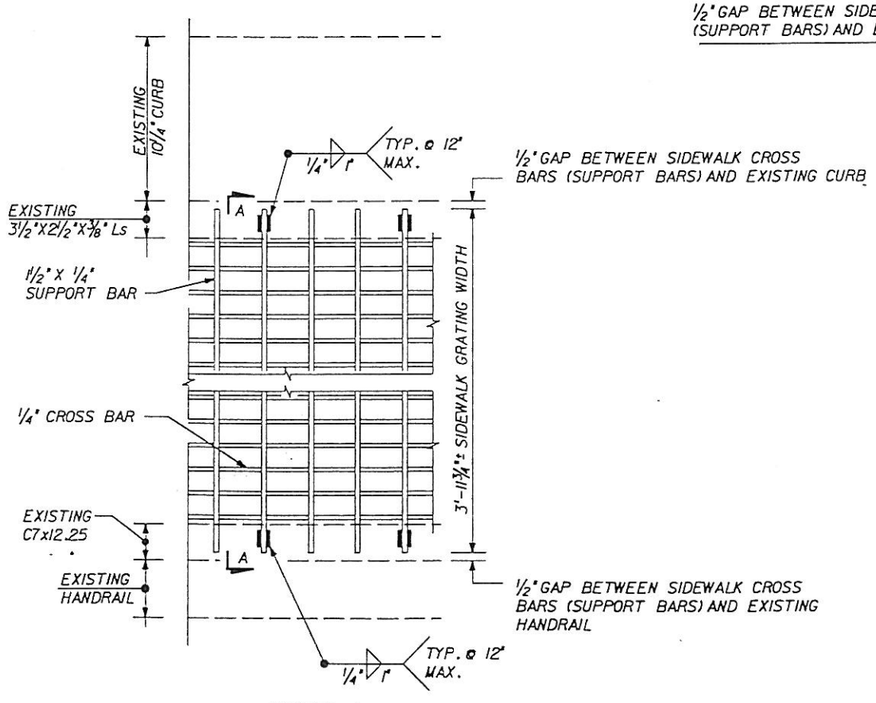

DETAIL A

NOTE: EXISTING BRACING UNDERNEATH SIDEWALK NOT SHOWN FOR CLARITY

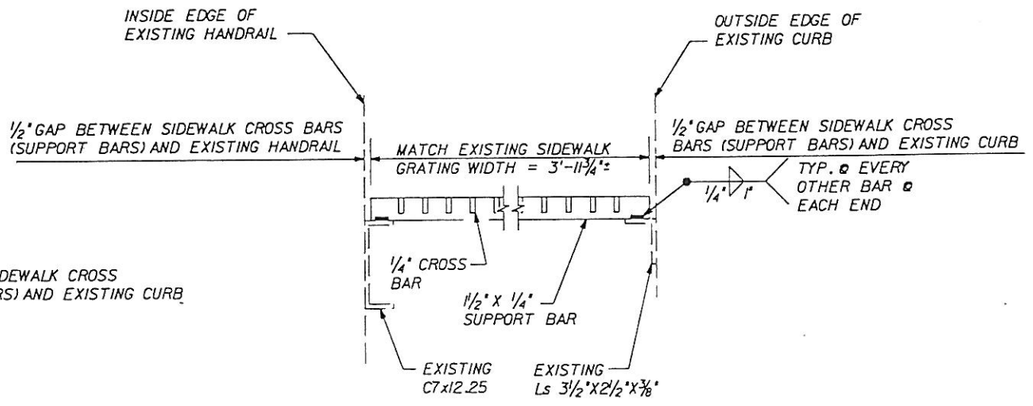

SECTION A-A THROUGH SIDEWALK GRATING

WORK IDENTIFICATION:

REPLACE CORRODED STEEL SIDEWALK DECK GRATING (BIG CARLOS DRAW BRIDGE).

NOTES:

1. REMOVE THE EXISTING SIDEWALK GRATING. DO NOT DAMAGE THE REMAINING STRUCTURAL STEEL SUPPORTING THE SIDEWALK.
2. CLEAN AND PAINT THE EXISTING SUPPORT CHANNEL AND ANGLE ACCORDING TO THE SPECIFICATION
3. INSTALL AN APPROVED SIDEWALK GRATING AND WELD TO THE EXISTING STEEL SUPPORT CHANNEL AND ANGLE AS DETAILED OR AS PER THE MANUFACTURER'S SPECIFICATIONS.
4. STEEL SIDEWALK FLOOR GRATING SHALL BE ASTM A709, GRADE 36 AND CONFORM TO SECTION 504 OF THE SPECIFICATIONS.
5. CONTRACTOR TO VERIFY DIMENSIONS SHOWN FOR CONSTUCTIBILITY. SIDEWALK GRATING SHALL BE FLUSH WITH EXISTING CONCRETE SIDEWALK AND EACH END OF BASCULE SPAN. NOTIFY THE ENGINEER FOR APPROVAL PRIOR ORDERING ANY MATERIAL.
6. PAY ITEM 504-2, STEEL SIDEWALK FLOOR (SF) TO INCLUDE ALL COSTS AS FOLLOWS:
   1. REMOVAL OF EXISTING GRATING.
   2. CLEANING AND PAINTING OF EXISTING SUPPORT CHANNEL AND ANGLE.
   3. FURNISHING AND INSTALLING NEW GRATING.
   4. DELIVERY OF EXISTING GRATING TO LEE COUNTY MAINTENANCE.

   ESTIMATED QUANTITY OF STEEL SIDEWALK FLOOR = 260 SF.
7. 5/16" HINGED ℄ TO BE ASTM A709, GRADE 36.

REVISION: 1 02/18/00 LFS
SCALE: 3
19805.03 STRST2.DGN

REVISIONS					
Date	By	Description	Date	By	Description

	Names	Dates
Drawn by	AEC	11/99
Checked by	LFS	11/99
Designed by	AEC	12/99
Checked by	LFS	12/99
Approved by	LFS	02/18/00

ENGINEER OF RECORD:
Kisinger Campo and Associates Corp.
2203 N. LOIS AVE.
SUITE 1200
TAMPA, FLORIDA 33607

LOGO: KCA

Lee COUNTY

DEPARTMENT OF TRANSPORTATION

SHEET TITLE: STRUCTURAL STEEL REPAIR DETAILS (2 OF 6)

PROJECT NAME: ALVA, BIG CARLOS & MATLACHA BASCULE BRIDGE REPAIR

Drawing

Index

BX1-80

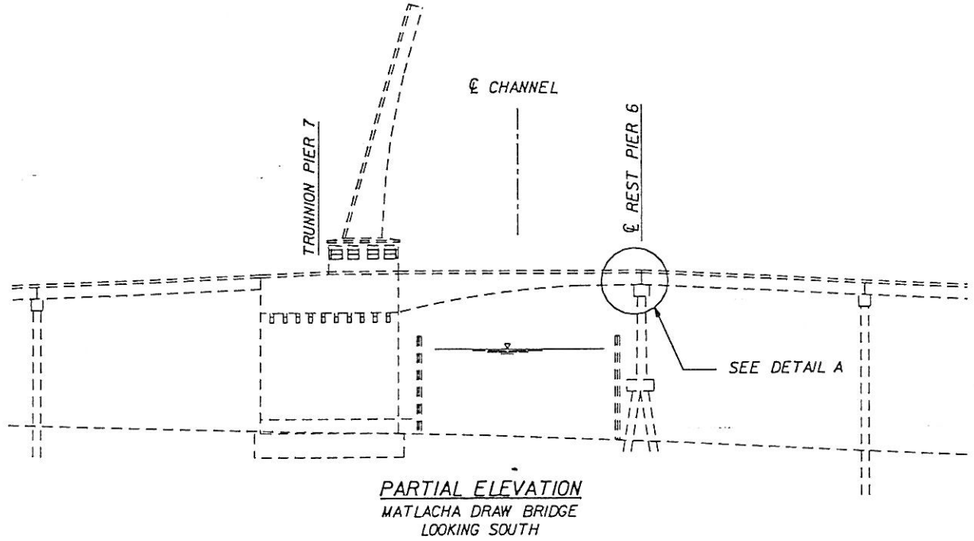

PARTIAL ELEVATION
MATLACHA DRAW BRIDGE
LOOKING SOUTH

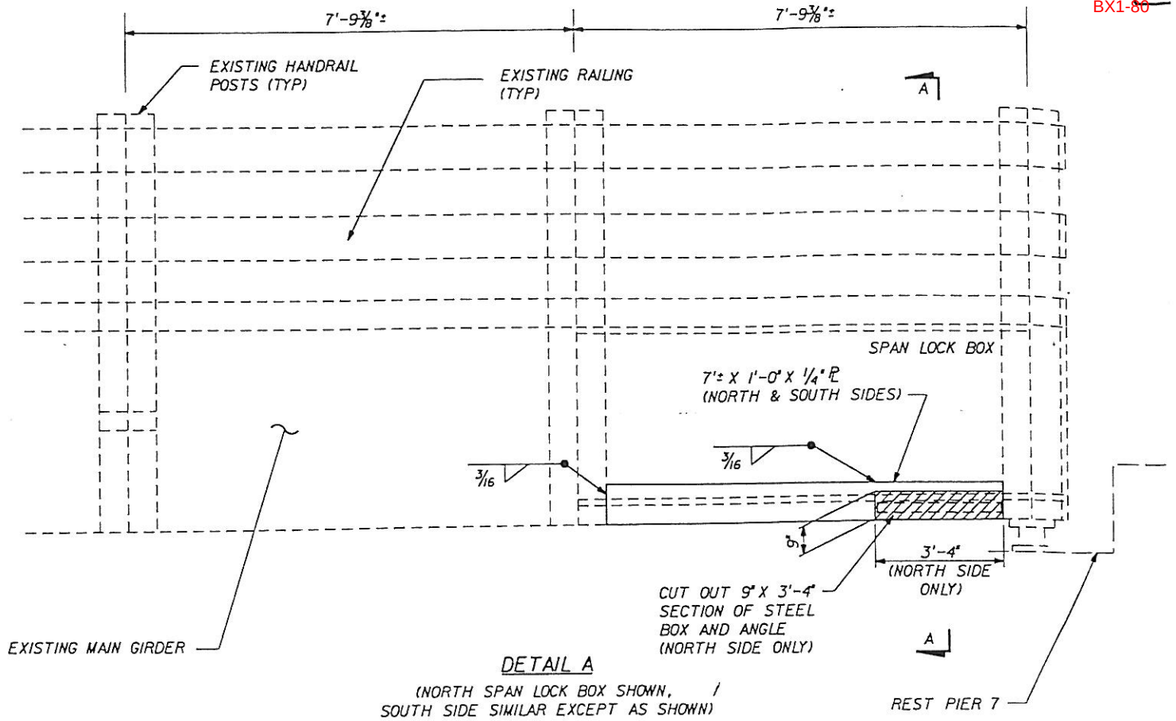

DETAIL A
(NORTH SPAN LOCK BOX SHOWN, SOUTH SIDE SIMILAR EXCEPT AS SHOWN)

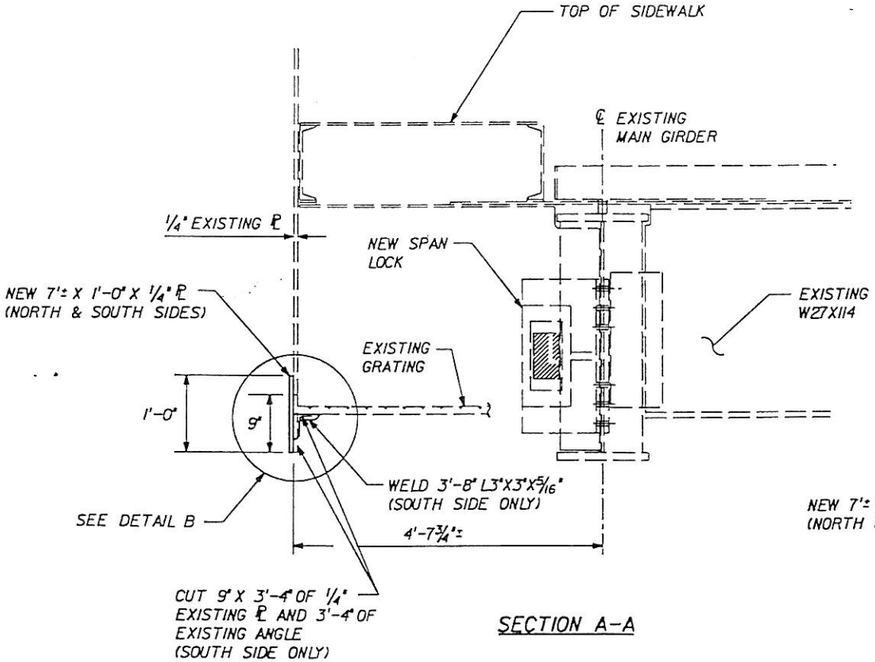

SECTION A-A

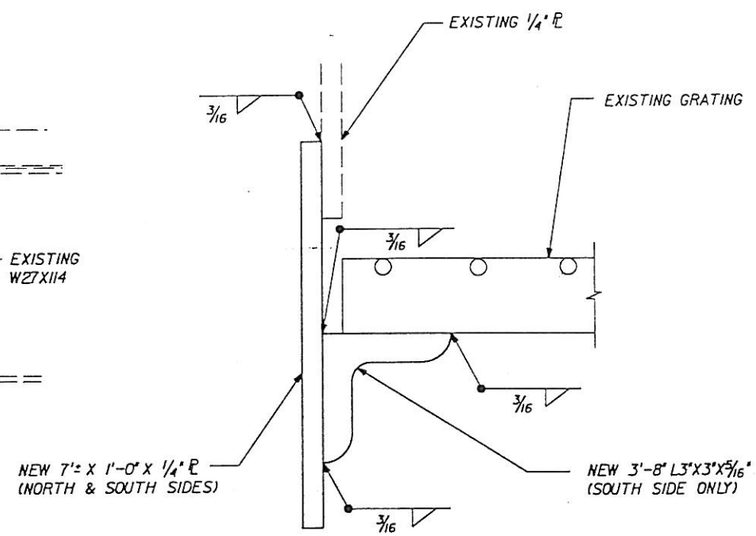

DETAIL B

WORK IDENTIFICATION:

REMOVE CORRODED SECTION OF SPAN LOCK BOX AND INSTALL NEW STEEL PLATE AND ANGLE TO SUPPORT GRATING ON NORTH SIDE OF BRIDGE.

INSTALL NEW STEEL PLATE ON SOUTH SIDE SPAN LOCK BOX.

NOTES:

1. CUT OUT 9" X 3'-4" SECTION OF SPAN LOCK BOX ON NORTH SIDE OF BRIDGE AS SHOWN ON THIS SHEET USING MECHANICAL MEANS.
2. CLEAN CORROSION FROM AREA TO BE REPAIRED ACCORDING TO THE SPECIFICATIONS.
3. WELD GRATING SUPPORT ANGLE (L3"X3"X5/16") TO NEW 1/4" ℄.
4. WELD 1/4" ℄ TO EACH SPAN LOCK BOX AS SHOWN.
5. ALL MEASUREMENTS SHALL BE VERIFIED IN THE FIELD PRIOR ORDERING ANY MATERIAL.
6. ALL WELDS TO BE IN ACCORDANCE WITH ANSI/AASHTO/AWS D1.5 BRIDGE WELDING CODE.
7. ALL STEEL TO BE ASTM A706, GRADE 36.
8. THE COST OF REPAIRING THE SPAN LOCK SHALL BE PAID UNDER PAY ITEM NO. 460-95, STRUCTURAL STEEL REPAIR (PER LB), INCLUDING ALL COSTS ASSOCIATED WITH COMPLETING THE REPAIR AS DETAILED. ESTIMATED QUANTITY = 160 LBS.

REVISIONS

Date	By	Description	Date	By	Description

	Names	Dates
Drawn by	[illegible]	11/99
Checked by	LFS	11/99
Designed by	[illegible]	12/99
Checked by	LFS	12/99
Approved by	[illegible]	02/18/00

ENGINEER OF RECORD:
Kisinger Campo and Associates Corp.
2203 N. LOIS AVE.
SUITE 1200
TAMPA, FLORIDA 33607

LOGO: KCA

LEE COUNTY

DEPARTMENT OF TRANSPORTATION

SHEET TITLE: STRUCTURAL STEEL REPAIR DETAILS (3 OF 6)

PROJECT NAME: ALVA, BIG CARLOS & MATLACHA BASCULE BRIDGE REPAIR

Drawing Index

19805.03 STRST3.DGN SCALE: 3 REVISION: 0 02/18/00 LFS

BX1-80

BX1-81

BX1-81

****** PLOT STATION TEXT ******

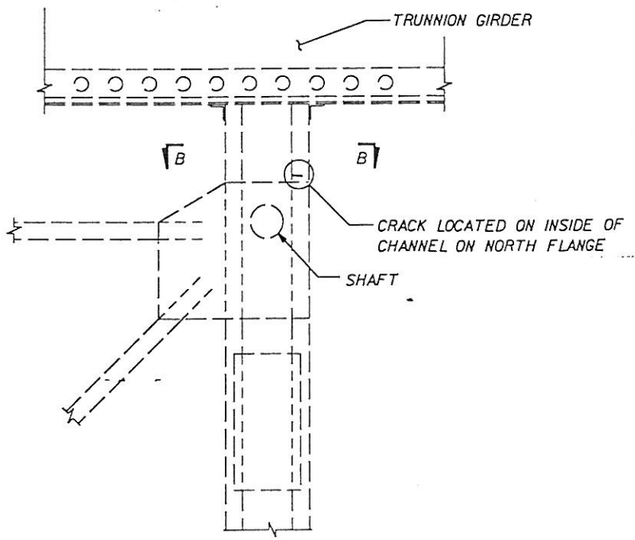

PARTIAL ELEVATION OF NORTH RACK GEAR SUPPORT
VIEW LOOKING NORTH

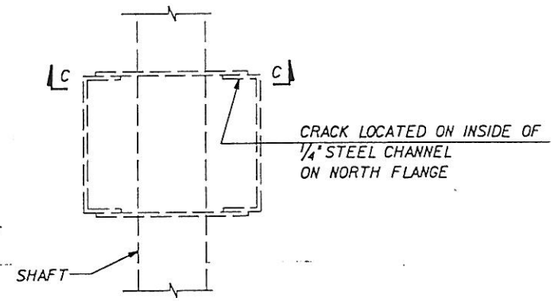

SECTION B-B

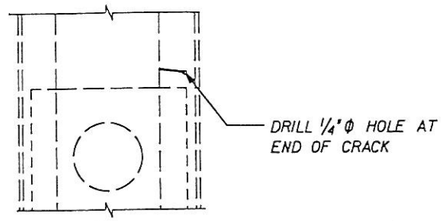

SECTION C-C

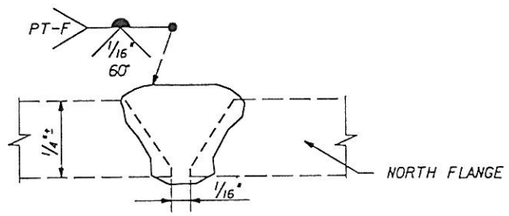

SINGLE VEE-GROOVE
COMPLETE PENETRATION
SECTION THROUGH FLANGE AT CRACK

WORK IDENTIFICATION:

REPAIR CRACK IN NORTH RACK GEAR SUPPORT OF THE MATLACHA DRAW BRIDGE.

CRACK REPAIRS TO NORTH RACK GEAR SUPPORT
MATLACHA DRAW BRIDGE

NOTES:

1. CLEAN STEEL OF PAINT, OIL AND GREASE AROUND CRACK.
2. PERFORM DYE PENETRANT TEST ON CRACK TO LOCATE FULL EXTENT OF CRACK.
3. DRILL 1/4" Φ HOLE AT END OF CRACK NEAREST TO CHANNEL WEB.
4. GRIND CRACK IN V-SHAPE THROUGH FLANGE. APPLY FULL PENETRATION GROOVE WELD AS DETAILED.
5. PERFORM SECOND DYE PENETRANT TEST AFTER WELDING IS COMPLETED.
6. CLEAN AND PAINT REPAIRED STEEL ACCORDING TO THE SPECIFICATIONS AFTER FINAL COMPLETION OF REPAIRS.
7. PAY ITEM 460-95-1, STRUCTURAL STEEL CRACK REPAIR (LUMP SUM), TO INCLUDE ALL COSTS ASSOCIATED WITH THE CRACK REPAIRS AS DETAILED ABOVE.

19805.03 STRST2.DGN SCALE: 3 REVISION: 1 02/18/00 LFS

REVISIONS

Date	By	Description	Date	By	Description

	Names	Dates
Drawn by	DEC	11/99
Checked by	LFS	11/99
Designed by	LFS	11/99
Checked by	PLH	12/99
Approved by	LFS	02/18/00

ENGINEER OF RECORD:
Kisinger Campo and Associates Corp.
2203 N. LOIS AVE.
SUITE 1200
TAMPA, FLORIDA 33607

LOGO:

DEPARTMENT OF TRANSPORTATION

SHEET TITLE: STRUCTURAL STEEL REPAIR DETAILS (5 OF 6)

PROJECT NAME: ALVA, BIG CARLOS & MATLACHA BASCULE BRIDGE REPAIR

BX1-81

BX1-81

BX1-82

PLOT STATION TEXT

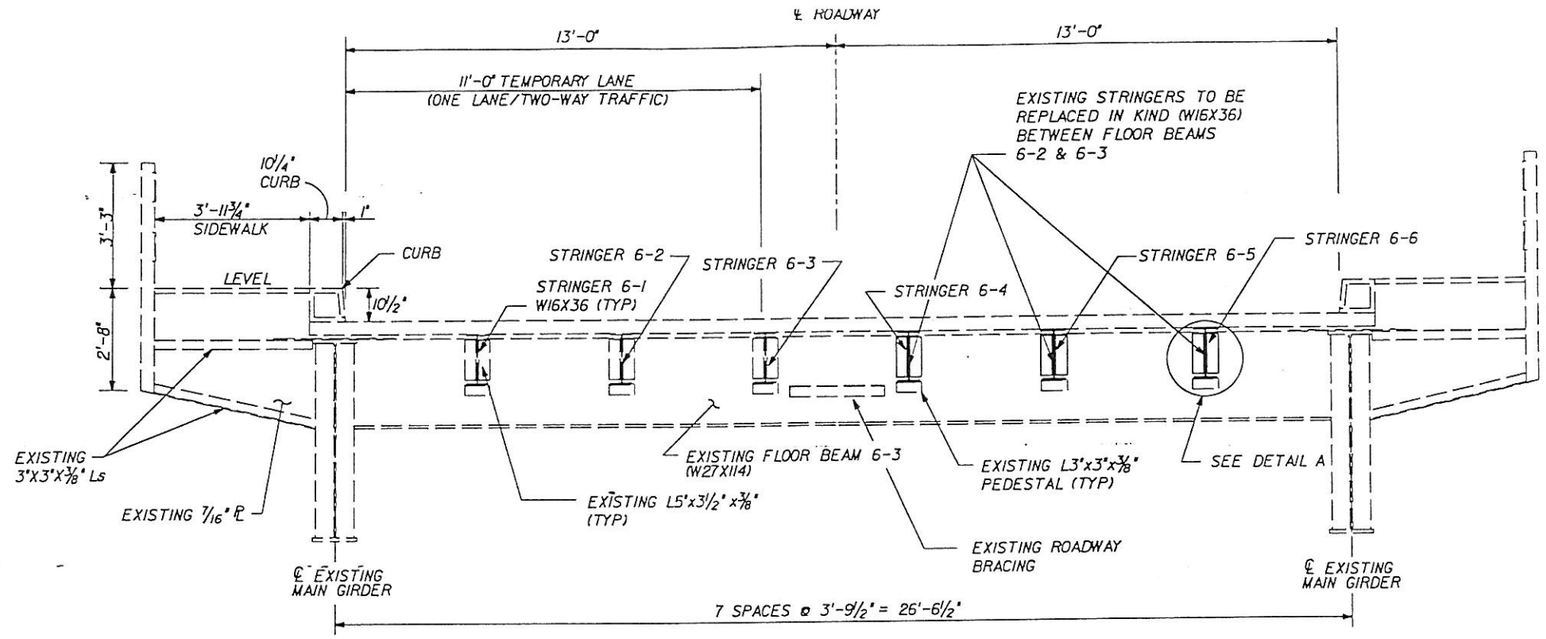

TYPICAL SECTION

SPAN 6 BETWEEN FLOOR BEAMS 6-2 & 6-3
LOOKING STATION AHEAD
MATLACHA DRAW BRIDGE

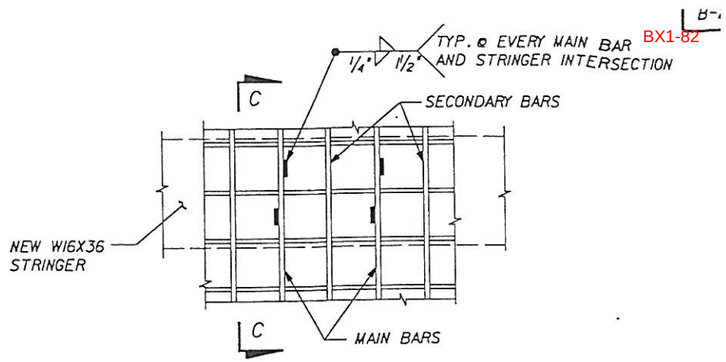

PARTIAL PLAN VIEW

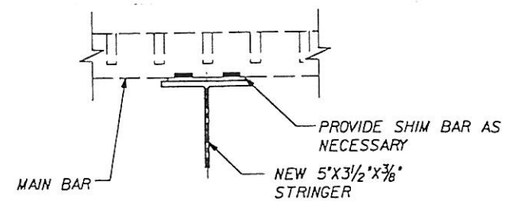

SECTION C-C THROUGH ROADWAY GRATING

WORK IDENTIFICATION:

REPLACE EXISTING CORRODED STEEL STRINGERS 6-4, 5 & 6 BETWEEN FLOOR BEAMS 6-2 AND 6-3 WITH NEW STRINGERS.

NOTES:

1. REPLACE ONLY ONE STRINGER AT A TIME.
2. CLOSE TRAFFIC LANE ABOVE STRINGERS TO BE REPLACED. A SINGLE 11'-0" LANE SHALL REMAIN OPEN AT ALL TIMES DURING REPAIR CONSTRUCTION. REFER TO THE GENERAL NOTES (SHEET B-4) FOR MAINTENANCE OF TRAFFIC NOTES AND LIMITATIONS.
3. CUT WELDS CONNECTING STRINGER TO STEEL DECK FLOORING. DO NOT CUT OR DAMAGE EXISTING STEEL DECK FLOORING. CONTRACTOR IS RESPONSIBLE FOR ANY DAMAGE TO EXISTING STEEL DECK FLOORING AND SHALL REPAIR DAMAGED FLOORING AT NO ADDITIONAL COST TO LEE COUNTY.
4. REMOVE EXISTING STRINGER AND INSTALL NEW STRINGER. CONTRACTOR SHALL REPLACE ALL ANGLES AND CONNECTORS (IN KIND) THAT HAVE 10% OR MORE SECTION LOSS. ALL EXISTING ANGLES THAT ARE REUSED SHALL BE CLEANED AND PAINTED ACCORDING TO THE SPECIFICATIONS.
5. ALL NEW STEEL SHAPES, ANGLES AND BARS TO BE ASTM A709, GRADE 36 AND BE PAINTED ACCORDING TO THE SPECIFICATIONS.
6. ALL BOLTS TO BE ⅞"Ø ASTM A325 HIGH STRENGTH BOLTS WITH HARDENED WASHERS AND HEAVY HEX NUTS.
7. CONTRACTOR TO SUPPLY SHOP DRAWINGS DETAILING PROCEDURE FOR REPLACING STRINGERS, INCLUDING METHOD OF CUTTING WELDS, ANY TEMPORARY SHORING REQUIRED AND INSTALLATION OF NEW STRINGERS. CONTRACTOR TO VERIFY DIMENSIONS FOR CONSTRUCTIBILITY. ALL SHOP DRAWINGS TO BE APPROVED BY THE ENGINEER PRIOR TO ORDERING OF ANY MATERIAL.
8. WELD NEW STRINGER TO STEEL DECK FLOORING AS DETAILED. PROVIDE SHIM BARS AS NECESSARY. PROVIDE SHOP DRAWINGS FOR SHIM BAR WELD ATTACHMENT TO STRINGERS FOR ENGINEER'S APPROVAL.
9. PAY ITEM NO. 460-95, STRUCTURAL STEEL REPAIR (PER LB) TO INCLUDE ALL COSTS ASSOCIATED WITH REMOVING EXISTING STRINGERS AND FURNISHING AND INSTALLING NEW STRINGERS, INCLUDING ALL NEW ANGLES, BARS AND CONNECTORS.
   ESTIMATED QUANTITY = 1850 LBS.

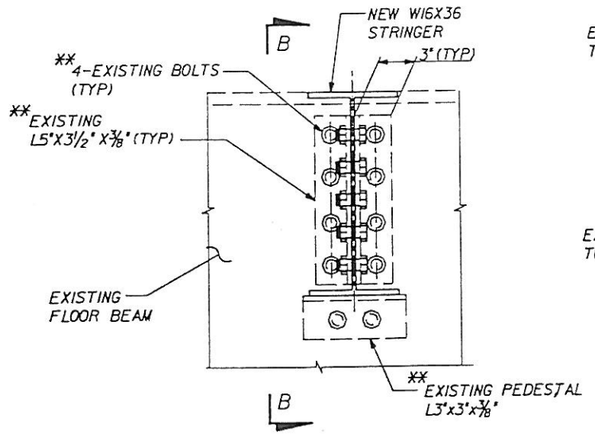

DETAIL A

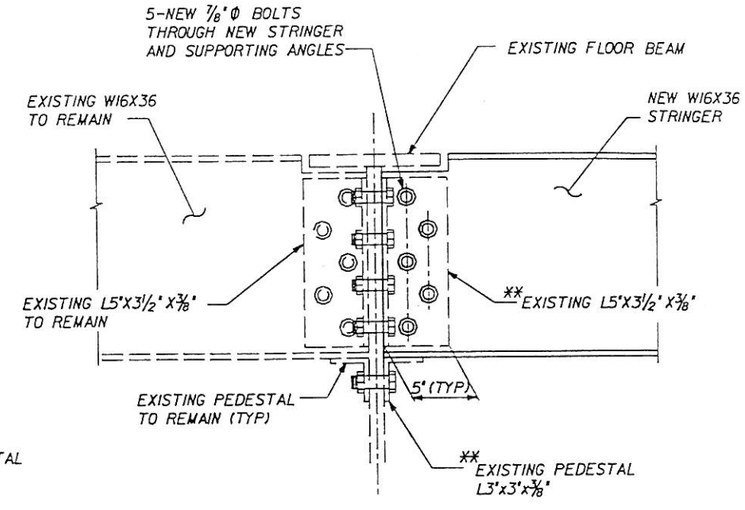

SECTION B-B

** REPLACE EXISTING ANGLES OR BOLTS (IN KIND) THAT HAVE 10% OR MORE SECTION LOSS

REVISIONS					
Date	By	Description	Date	By	Description

	Names	Dates
Drawn by	CAL	11/99
Checked by	LFS	12/99
Designed by	CAL	11/99
Checked by	LFS	12/99
Approved by	LFS	02/18/00

ENGINEER OF RECORD:
Kisinger Campo and Associates Corp.
2203 N. LOIS AVE.
SUITE 1200
TAMPA, FLORIDA 33607

LOGO: KCA

LEE COUNTY

DEPARTMENT OF TRANSPORTATION

SHEET TITLE: STRUCTURAL STEEL REPAIR DETAILS (4 OF 6)

PROJECT NAME: ALVA, BIG CARLOS & MATLACHA BASCULE BRIDGE REPAIR

Drawing No.

Index

19805.03
STRST4.DGN
SCALE: 3
REVISION: 0
02/18/00 LFS

BX1-82

BX1-83

PLOT STATION TEXT

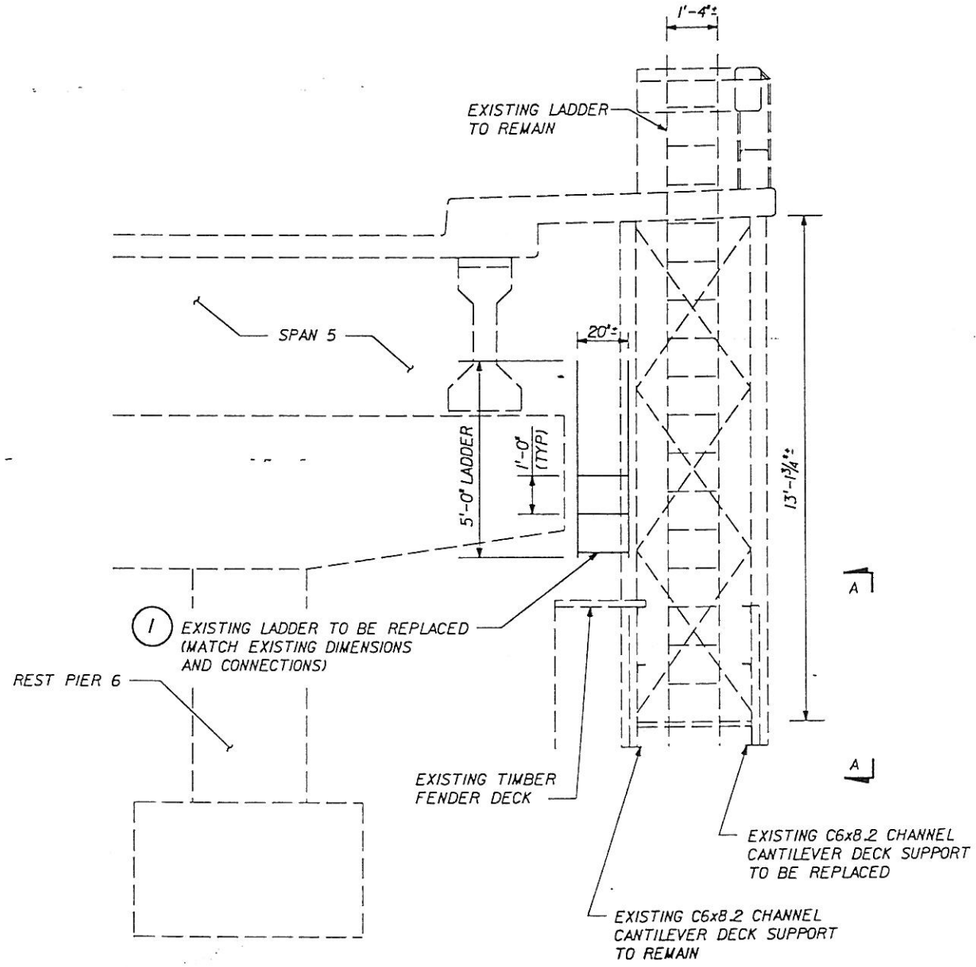

PARTIAL ELEVATION - REST PIER 6

MATLACHA DRAW BRIDGE

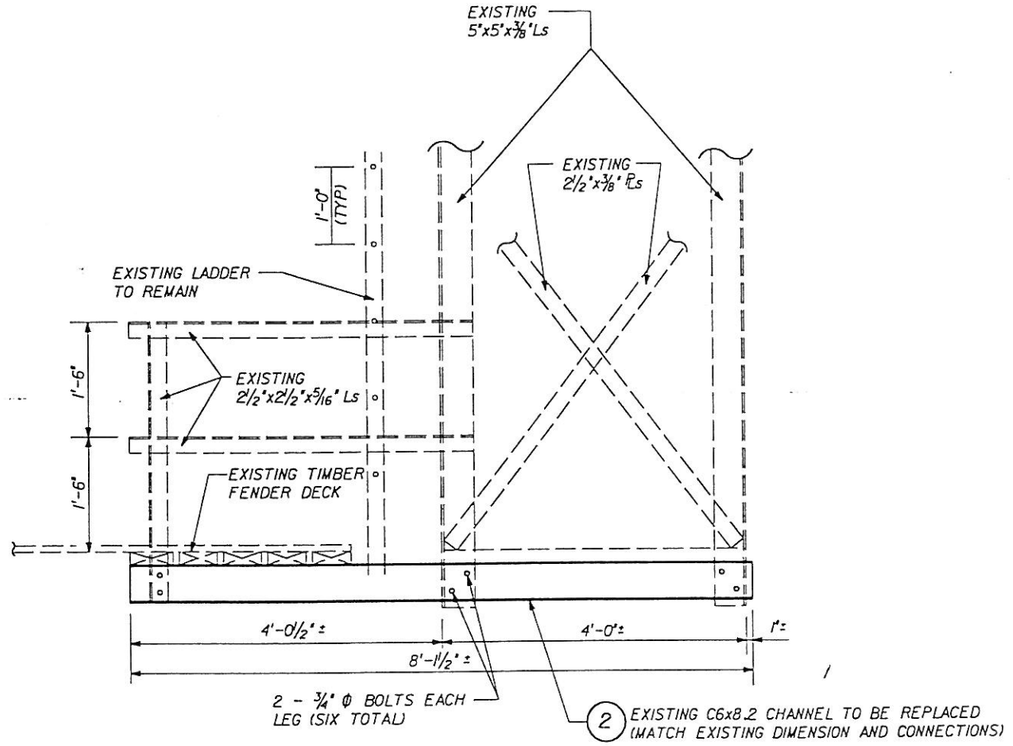

VIEW A-A

WORK IDENTIFICATION:

1. REPLACE CORRODED LADDER (MATLACHA DRAW BRIDGE).
2. REPLACE CORRODED CHANNEL SUPPORTING TIMBER FENDER DECK (MATLACHA DRAW BRIDGE).

NOTES:

1. REMOVE EXISTING CORRODED LADDER AND INSTALL NEW 5'-0" STEEL LADDER IN SAME LOCATION AS EXISTING. CONTRACTOR TO PROVIDE SHOP DRAWINGS OF LADDER AND METHOD OF ATTACHMENT TO EXISTING STRUCTURE FOR ENGINEER'S APPROVAL PRIOR TO ORDERING ANY MATERIALS.
2. REPLACE CORRODED C6x8.2 CHANNEL SUPPORTING TIMBER DECK. APPROXIMATE LENGTH, OF C6x8.2 CHANNEL BEAM IS 8'-1½'. CONTRACTOR TO VERIFY CHANNEL LENGTH. REPLACE CHANNEL BOLTS WITH 20% OR GREATER SECTIN LOSS.
3. ALL STEEL FOR LADDER, SUPPORT CHANNEL TO BE ASTM A709, GRADE 36 AND GALVANIZED ACCORDING TO ASTM A 123.
4. ALL BOLTS TO BE ASTM A307, ¾"ϕ WITH STANDARD WASHER AND NUT AND HOT DIPPED GALVANIZED ACCORDING TO ASTM A 153. ALL CONNECTION HARDWARE TO BE INCLUDED IN PAY ITEM 460-95, STRUCTURAL STEEL REPAIR.
5. PAY ITEM 460-95, STRUCTURAL STEEL REPAIR (LB) TO INCLUDED ALL COSTS ASSOCIATED WITH THE REPLACEMENT OF EXISTING LADDER & CHANNEL AS DETAILED ABOVE. ESTIMATED QUANTITY = 120 LBS.

19805.03 STRST3.DGN SCALE: 3 REVISION: 0 02/18/00 LFS

REVISIONS

Date	By	Description	Date	By	Description

	Names	Dates
Drawn by	AEC	11/99
Checked by	LFS	11/99
Designed by	AEC	12/99
Checked by	LFS	12/99
Approved by	LFS	02/18/00

ENGINEER OF RECORD:
Kisinger Campo and Associates Corp.
2203 N. LOIS AVE.
SUITE 1200
TAMPA, FLORIDA 33607

LOGO:

DEPARTMENT OF TRANSPORTATION

SHEET TITLE: STRUCTURAL STEEL REPAIR DETAILS (6 OF 6)

PROJECT NAME: ALVA, BIG CARLOS & MATLACHA BASCULE BRIDGE REPAIR

BX1-83

BX1-84

PLOT STATION TEXT

WORK IDENTIFICATION:

1. RECONDITION AIR BUFFER ASSEMBLY (BIG CARLOS DRAW BRIDGE)
2. RECONDITION UPPER LIVE LOAD SHOES (ALVA, BIG CARLOS & MATLACHA DRAW BRIDGES) AND BEARING STRIKE PLATE ASSEMBLIES (ALVA & BIG CARLOS DRAW BRIDGES).
3. REPLACE UPPER LIVE LOAD SHOES (BIG CARLOS & MATLACHA DRAW BRIDGES).

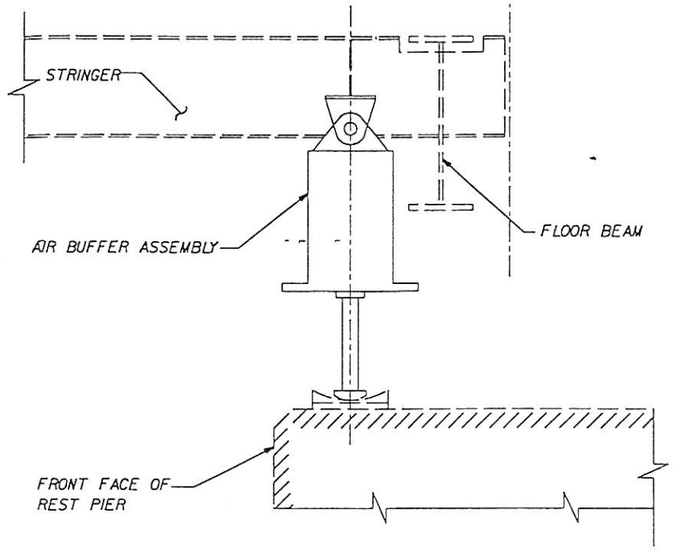

(1) AIR BUFFER CYLINDER
BIG CARLOS DRAW BRIDGE

NOTES:

1. BUFFER CYLINDER (BIG CARLOS DRAW BRIDGE) TO BE REMOVED FROM SERVICE, CLEANED, DISASSEMBLED AND RECONDITIONED.
2. REFURBISHMENT OF BUFFER CYLINDER TO INCLUDE, AS A MINIMUM:
   A. HONING OF THE CYLINDER.
   B. HONING OF THE PISTON ROD.
   C. INSPECTION AND REPLACEMENT OF PISTON SHAFT GUIDE BUSHING.
   E. INSPECTION AND REPLACEMENT OF PISTON RINGS.
   F. INSPECTION AND REPLACEMENT OF LUBRICATION FITINGS, PRESSURE GAGES AND AIR VALVES.
3. CONTRACTOR TO SUBMIT SHOP DRAWINGS AND A CONDITION AND REHABILITATION REPORT OUTLINING THE CONDITION OF EACH ELEMENT AND THE CORRECTIVE ACTION TO BE TAKEN. PHOTOS OF DISASSEMBLED PARTS TO BE PROVIDED IN REPORT.
4. CLEAN AND PAINT BUFFER CYLINDER ASSEMBLY AFTER REPAIRS ARE COMPLETED AND TOUCH-UP PAINT AFTER INSTALLATION ACCORDING TO THE SPECIFICATIONS.
4. INSTALL RECONDITIONED BUFFER CYLINDER AND VERIFY THAT IT IS OPERATING ACCORDING TO THE SPECIFICATIONS.
5. PAY ITEM 460-110, BUFFER CYLINDER (EA), SHALL INCLUDE ALL COSTS ASSOCIATED WITH REMOVING, RECONDITIONING AND REINSTALLING AIR BUFFER CYLINDER AS DETAILED ABOVE.

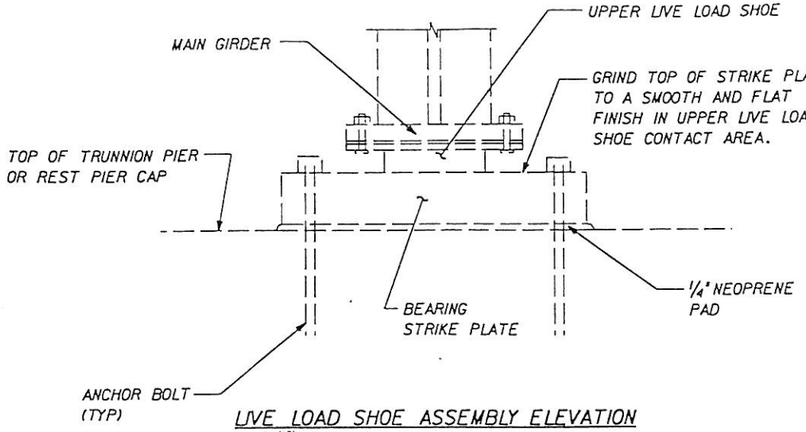

LIVE LOAD SHOE ASSEMBLY ELEVATION

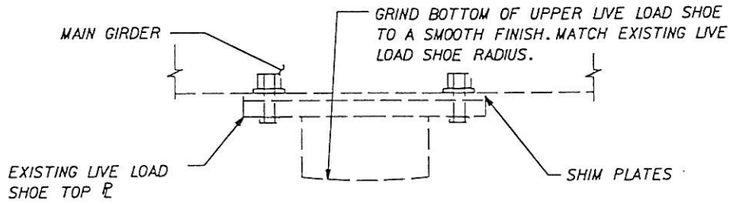

UPPER LIVE LOAD SHOE END VIEW

NOTE: REFER TO EXISTING PLANS FOR DIMENSIONS AND DETAILS NOT SHOWN.

(2) RECONDITION LIVE LOAD SHOE ASSEMBLIES
ALVA, BIG CARLOS & MATLACHA DRAW BRIDGES

(3) REPLACE UPPER LIVE LOAD SHOE
BIG CARLOS & MATLACHA DRAW BRIDGES

NOTES:

1. CLEAN EXISITNG UPPER LIVE LOAD SHOES AND BEARING STRIKE PLATE ASSEMBLIES TO REMAIN ACCORDING TO THE SPECIFICATIONS.
2. GRIND TOP OF BEARING STRIKE PLATE AND BOTTOM OF LIVE LOAD SHOE TO A SMOOTH FINISH (MATCH EXISTING RADIUS).
3. REMOVE EXISTING UPPER LIVE LOAD SHOE ASSEMBLIES TO BE REPLACED IN KIND. CLEAN EXISTING MAIN GIRDER OF CORROSION ACCORDING TO THE SPECIFICATIONS AND INSTALL NEW UPPER LIVE LOAD SHOE ASSEMBLY. REFER TO EXISTING PLANS FOR DETAILS.
4. SHIM LIVE LOAD SHOES, IF NECESSARY, TO PROVIDE A FIRM SEAT BETWEEN LIVE LOAD SHOE AND BEARING STRIKE PLATE. SHIM PLATES SHALL BE STAINLESS STEEL. REFER TO EXISTING PLANS FOR PLATE DETAILS.
5. FINAL LIVE LOAD SHOE ADJUSTMENT IS TO BE MADE WITH THE SPAN LOCKS DISENGAGED AND NO TRAFFIC ON THE BRIDGE. CONTRACTOR TO COORDINATE THE LIVE LOAD SHOE RECONDITIONING WITH THE SPAN LOCK REPLACEMENT ON THE ALVA & MATLACHA DRAW BRIDGES. REFER TO THE GENERAL NOTES FOR MAINTENANCE OF TRAFFIC AND LANE CLOSURE RESTRICTIONS.
6. CLEAN AND PAINT REPAIRED STEEL ACCORDING TO THE SPECIFICATIONS AFTER FINAL COMPLETION OF REPAIRS.
7. PAY ITEM 460-3-808, MACHINERY & CASTINGS (LIVE LOAD SHOE ASSEMBLY - LUMP SUM, TO INCLUDE ALL COSTS ASSOCIATED WITH THE FOLLOWING:
   1. CLEANING AND FINISHING OF EXISTING CORRODED UPPER LIVE LOAD SHOES AND BEARING STRIKE PLATES.
   2. REMOVING EXISTING LIVE LOAD SHOES AND STRIKE PLATES TO BE REPLACED.
   3. FURNISHING AND INSTALLING OF NEW UPPER LIVE LOAD SHOE ASSEMBLIES AND AL CONNECTING HARDWARE.
   4. FURNISHING AND INSTALLING OF STAINLESS STEEL SHIMS.
   5. REPLACING BEARING STRIKE PLATES ON THE BIG CARLOS & MATLACHA DRAW BRID AS DETAILED ON SHEET M-2.

   NOTE: A SEPARATE LUMP SUM IS REQUIRED FOR EACH BRIDGE. THE QUANTITIES FOR RECONDITIONING AND REPLACING OF UPPER LIVE LOAD SHOES AND STRIKE PLATES ARE SUMMARIZED BELOW.
8. WORK THIS SHEET WITH SHEETS B-8, 9 & 10 (BASCULE SPAN WORK IDENTIFICATION) AN SHEET M-2 (SPAN LOCK DETAILS).

LIVE LOAD SHOE ASSEMBLY QUANTITIES FOR REPLACEMENT & RECONDITIONING

	RECONDITION UPPER LL SHOES	RECONDITION STRIKE PLATES	REPLACE LL SHOES	REPLACE STRIKE PLATES
ALVA	(4) @ TRUNNION PIERS	(4) @ TRUNNION PIERS	---	---
BIG CARLOS	(2) @ TRUNNION PIER (1) @ LEFT REST PIER	(2) @ TRUNNION PIER (1) @ LEFT REST PIER	(1) @ RIGHT REST PIER	(1) @ RIGHT REST PIER
MATLACHA	(2) @ TRUNNION PIER	---	(2) @ REST PIER	(2) @ TRUNNION PIER (2) @ REST PIER *

* COST OF STRIKE PLATE REPLACEMENT AT TRUNNION PIER ON THE MATLACHA DRAW BRIDGE IS INCLUDED IN PAY ITEM 460-3-105, SPAN LOCKS. REFER TO SHEET M-5 FOR DETAILS.

19805.03 MECHDET.DGN SCALE:1:1 REVISION:0 02/18/00 LFS

REVISIONS					
Date	By	Description	Date	By	Description

	Names	Dates
Drawn by	DEC	9/99
Checked by	LFS	9/99
Designed by	LFS	12/99
Checked by	PLH	12/99
Approved by	LFS	02/18/00

ENGINEER OF RECORD:
Kisinger Campo and Associates Corp.
2203 N. LOIS AVE.
SUITE 1200
TAMPA, FLORIDA 33607

LOGO: KCA

LEE COUNTY DEPARTMENT OF TRANSPORTATION

SHEET TITLE: MECHANICAL REPAIR DETAILS (1 OF 3)

PROJECT NAME: ALVA, BIG CARLOS AND MATLACHA BASCULE BRIDGE REPAIR

BX1-84

WORK IDENTIFICATION:

1. REPLACE LIVE LOAD SHOE BEARING STRIKE PLATES AT TRUNNION PIER 7 (MATLACHA DRAW BRIDGE).
2. REPLACE LIVE LOAD SHOE BEARING STRIKE PLATE AT REST PIER 19, NORTH BEARING ONLY (BIG CARLOS DRAW BRIDGE).

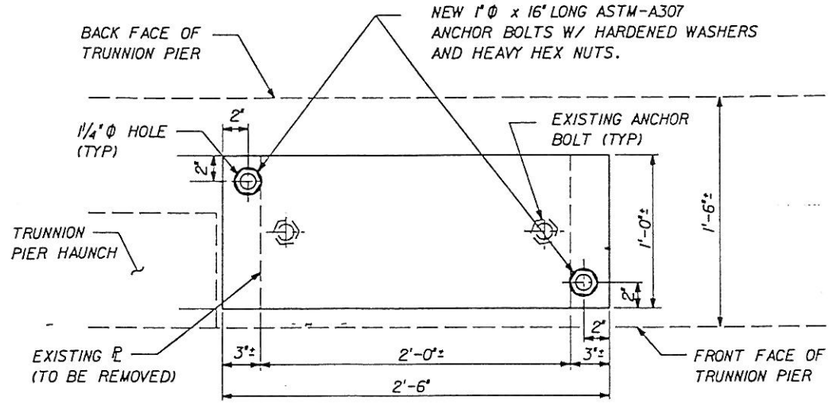

PLAN

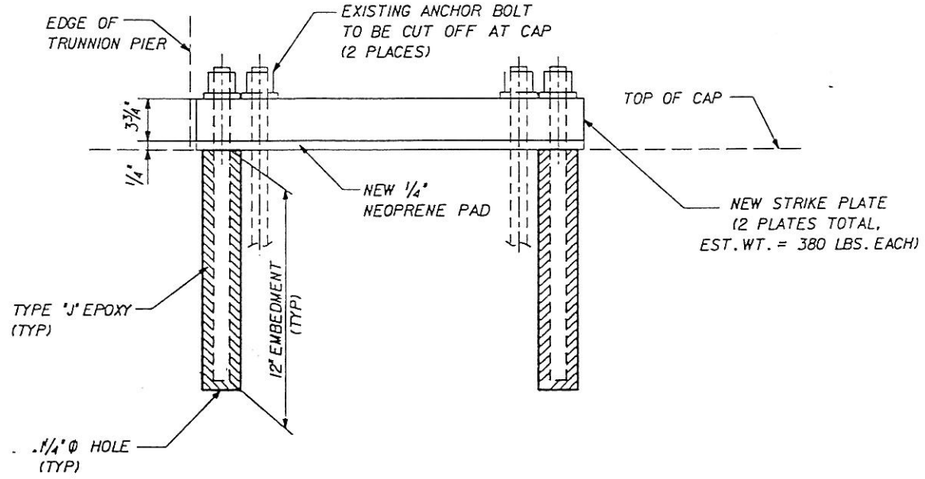

ELEVATION

(1) REPLACE BEARING STRIKE PLATE
MATLACHA DRAW BRIDGE

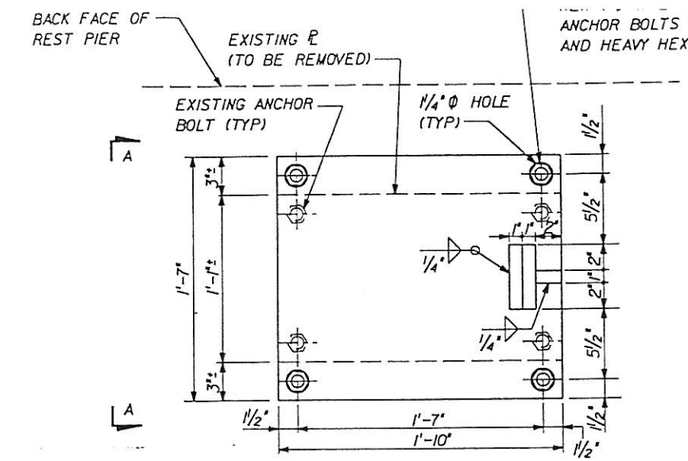

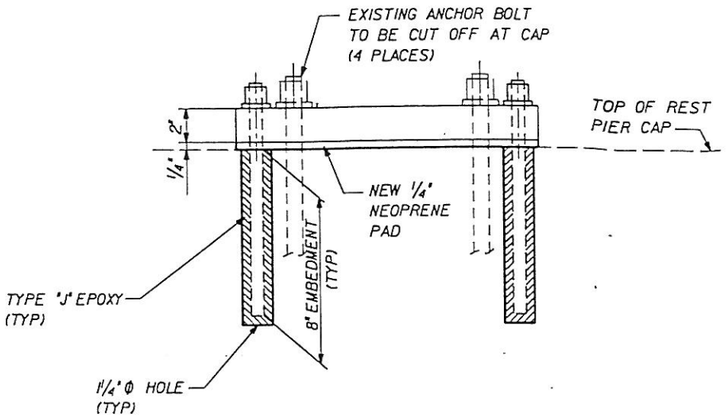

VIEW A-A

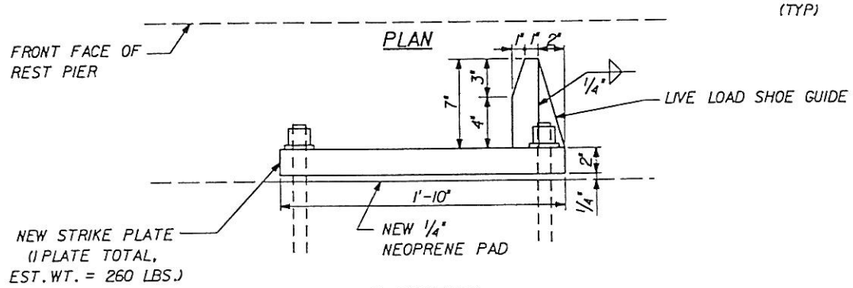

ELEVATION

(2) REPLACE BEARING STRIKE PLATE
BIG CARLOS DRAW BRIDGE

INSTALL NEW BEARING STRIKE PLATES
BIG CARLOS & MATLACHA DRAW BRIDGE

NOTES:

1. REMOVE OR CUT OFF EXISTING ANCHOR BOLT NUTS.
2. PROVIDE TEMPORARY SUPPORT FOR LIVE LOAD SHOES AND REMOVE EXISTING BEARING STRIKE PLATE AND NEOPRENE PAD.
2. CUT OFF EXISTING ANCHOR BOLTS AT CAP LEVEL AND CLEAN ANY VISIBLE CORROSION.
3. DRILL NEW ANCHOR BOLT HOLES IN CONCRETE CAP. IF REBAR IS ENCOUNTERED, SHIFT NORMAL TO FACE OF PIER TO CLEAR REBAR AND REDRILL. AFTER ENGINEER HAS APPROVED BOLT HOLE LOCATION, CLEAN OUT DEBRIS, INJECT TYPE J EPOXY AND INSTALL NEW ANCHOR BOLTS.
4. DRILL HOLES IN NEW STRIKE PLATES CORRESPONDING TO APPROVED HOLE LAYOUT IN CAP.
5. PLACE NEW NEOPRENE BEARING PAD AND NEW STRIKE PLATE. NEW STRIKE PLATE TO BE PAINTED ACCORDING TO THE SPECIFICATIONS PRIOR TO INSTALLATION.
6. AFTER EPOXY HAS SET, ACCORDING TO MANUFACTURER'S SPECIFICATIONS, ATTACH ANCHOR BOLT, WASHERS AND NUTS. BOLTS SHALL BE PROPERLY LUBRICATED AND TENSIONED ACCORDING TO THE SPECIFICATIONS.
7. STEEL FOR STRIKE PLATES TO BE ASTM A709, GRADE 36 AND ANCHOR BOLTS TO BE ASTM A307 WITH WASHERS AND HEX NUTS.
8. SHIM LIVE LOAD SHOE, IF NECESSARY, TO PROVIDE A FIRM SEAT BETWEEN LIVE LOAD SHOE AND STRIKE PLATE.
9. NOTE THAT ALL WORK MUST BE COMPLETED WITHIN THE MAINTENANCE OF TRAFFIC LIMITATIONS OUTLINED IN THE GENERAL NOTES, SHEET B-4.
10. PAY ITEM 460-3-808, MACHINERY & CASTINGS (LIVE LOAD SHOE ASSEMBLY - LUMP SUM) TO INCLUDE ALL COSTS ASSOCIATED WITH THE FOLLOWING:
    1. REMOVING EXISTING PLATE AND CUTTING OFF ANCHOR BOLTS.
    2. FURNISHING AND INSTALLING NEW ANCHOR BOLT W/ EPOXY, NEOPRENE PAD AND NEW BEARING STRIKE PLATES.
    3. SHIMMING LIVE LOAD SHOES; IF NECESSARY, INCLUDING FURNISHING OF STAINLESS STEEL SHIMS.
    4. CLEANING AND PAINTING OF NEW STRIKE PLATE ASSEMBLIES.
11. REFER TO SHEET M-1 FOR ADDITIONAL PAY ITEM NOTES.
12. WORK THIS SHEET WITH SHEETS B-9 & 10 (BIG CARLOS & MATLACHA BASCULE SPAN WORK IDENTIFICATION).

19805.03 MECHDET.DGN SCALE: 1:1 REVISION: 0 02/18/00 LFS

REVISIONS

Date	By	Description	Date	By	Description

	Names	Dates
Drawn by	[illegible]	9/99
Checked by	LFS	9/99
Designed by	[illegible]	12/99
Checked by	LFS	12/99
Approved by	LFS	02/18/00

ENGINEER OF RECORD:
Kisinger Campo and Associates Corp.
2203 N. LOIS AVE.
SUITE 1200
TAMPA, FLORIDA 33607

LOGO: KCA

LEE COUNTY DEPARTMENT OF TRANSPORTATION

SHEET TITLE: MECHANICAL REPAIR DETAILS (2 OF 3)

PROJECT NAME: ALVA, BIG CARLOS AND MATLACHA BASCULE BRIDGE REPAIR

BX1-85

PLOT STATION TEXT BOX

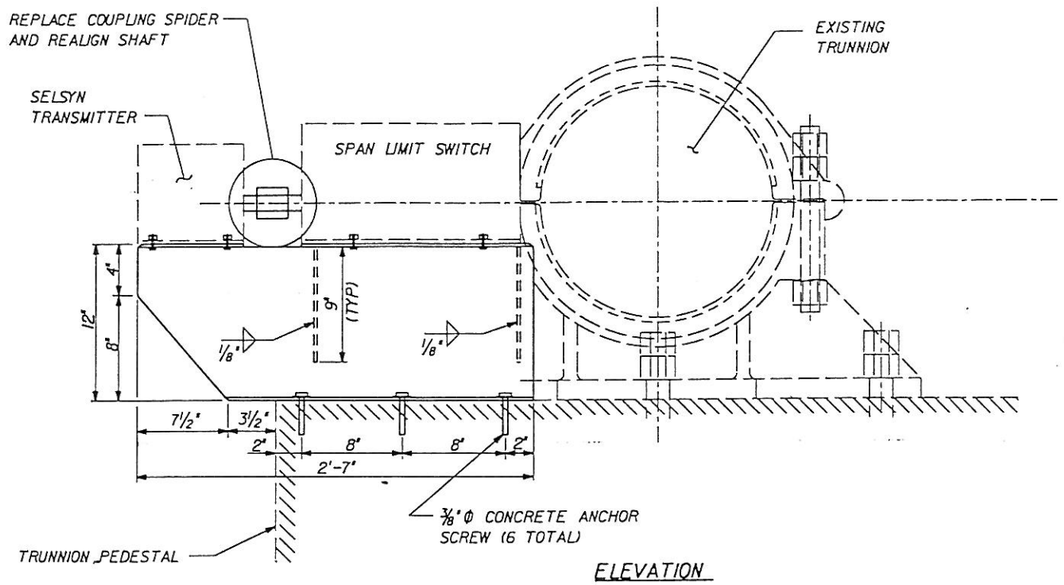

ELEVATION

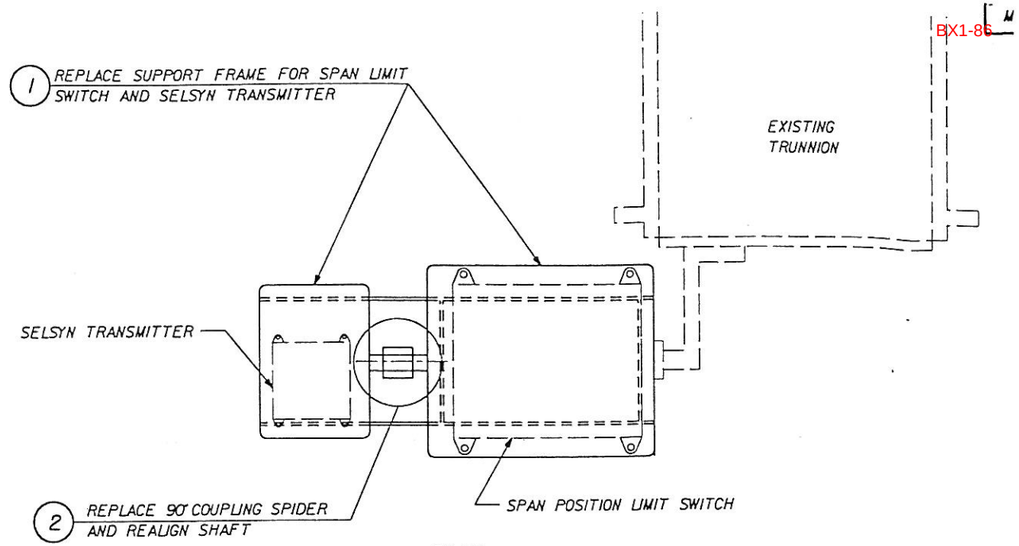

PLAN

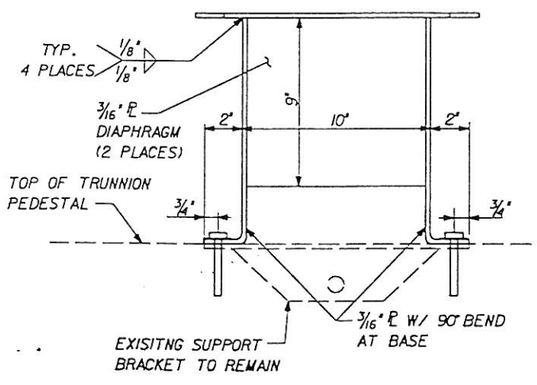

SUPPORT FRAME ELEVATION

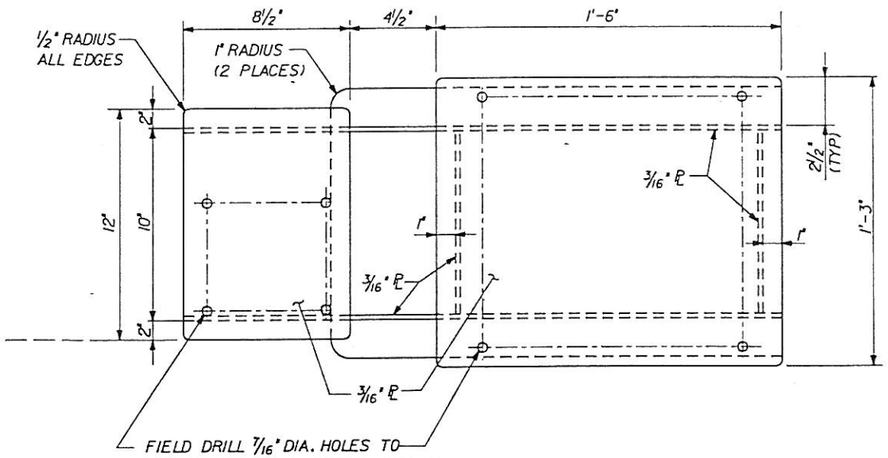

SUPPORT FRAME PLAN
(EST. WT. = 80 LBS.)

SPAN POSITION LIMIT SWITCH & SELSYN TRANSMITTER REPAIR DETAILS

WORK IDENTIFICATION:

1. REMOVE EXISTING SUPPORT FRAME AND INSTALL NEW SUPPORT FRAME FOR THE SPAN POSITION LIMIT SWITCH AND SELSYN TRANSMITTER.

2. REMOVE EXISTING COUPLING, REALIGN SHAFTS AND INSTALL NEW COUPLING BETWEEN THE SPAN POSITION LIMIT SWITCH AND SELSYN TRANSMITTER.

NOTES:

1. THE EXISTING STEEL SUPPORT SHALL BE COMPLETELY REMOVED USING MECHANICAL MEANS. DO NO DAMAGE THE TRUNNION PEDESTAL.
2. ALL STEEL PLATES ARE ASTM A-709, GRADE 36, 3/16" THICK.
3. CONTRACTOR TO FIELD VERIFY ALL DIMENSIONS TO ENSURE VERTICAL ALIGNMENT OF LIMIT SWITCH WITH TRUNNION.
4. CONTRACTOR TO FABRICATE NEW SUPPORT FRAME IN SHOP AND CLEAN, PRIME AND PAINT IN ACCORDANCE WITH SECTION 560 OF THE SPECIFICATIONS PRIOR TO INSTALLATION.
5. INSTALL SUPPORT FRAME AS SHOWN USING CONCRETE ANCHOR SCREWS.
6. REALIGN SHAFTS, ATTACH NEW COUPLING AND REATTACH SPAN POSITION LIMIT SWITCH AND SELSYN TRANSMITTER TO SUPPORT FRAME USING CONNECTORS AS SHOWN.
7. ALL BOLTS ARE 3/8" x 1 1/2" 16UNC-2b HEAVY HEX BOLT W/ WASHERS & NUTS (ASTM A325). ALL CONNECTORS SHALL BE HOT DIPPED GALVANIZED IN ACCORDANCE WITH ASTM A-153.
8. PAY ITEM 460-95, STRUCTURAL STEEL REPAIR (PER LB.) TO INCLUDE THE FOLLOWING:
   A. REMOVAL OF EXISTING SUPPORT FRAME.
   B. FURNISHING AND INSTALLING NEW SUPPORT FRAME INCLUDING ALL CONNECTORS.
   C. REMOVAL OF EXISTING COUPLING, REALIGNMENT OF SHAFTS AND FURNISHING AND INSTALLING NEW COUPLING SPIDER FOR CONNECTION BETWEEN SELSYN TRANSMITTER AND SPAN POSITION LIMIT SWITCH.

STRUCTURAL STEEL REPAIR QUANTITY ESTIMATE = 80 LBS.

19805.03 MECHDET.DGN SCALE:1W REVISION:0 02/18/00 LFS

REVISIONS					
Date	By	Description	Date	By	Description

	Names	Dates
Drawn by	DFC	9/99
Checked by	LFS	9/99
Designed by	DFC	9/99
Checked by	LFS	10/99
Approved by	LFS	02/18/00

ENGINEER OF RECORD:
Kisinger Campo and Associates Corp.
2203 N. LOIS AVE.
SUITE 1200
TAMPA, FLORIDA 33607

LOGO: KCA

Lee COUNTY

DEPARTMENT OF TRANSPORTATION

SHEET TITLE: MECHANICAL REPAIR DETAILS (3 OF 3)

PROJECT NAME: ALVA, BIG CARLOS AND MATLACHA BASCULE BRIDGE REPAIR

BX1-86

BX1-87

BX1-87

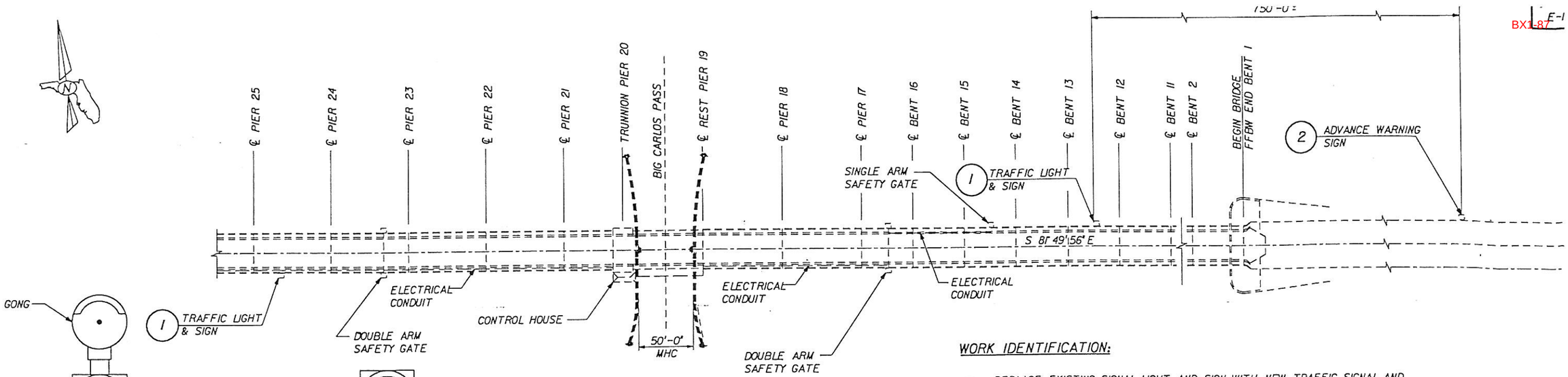

PLAN

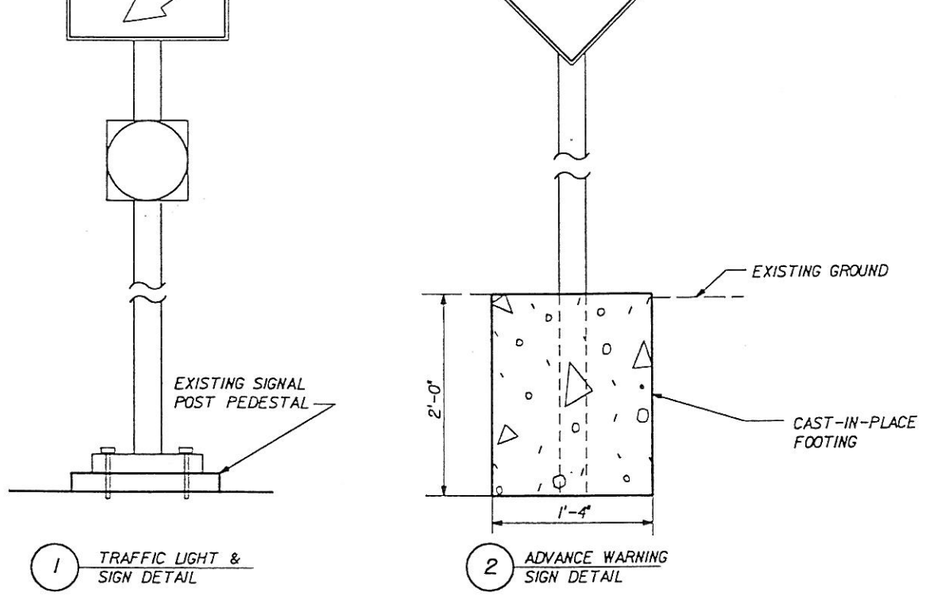

1 TRAFFIC LIGHT & SIGN DETAIL

2 ADVANCE WARNING SIGN DETAIL

WORK IDENTIFICATION:

1. REPLACE EXISTING SIGNAL LIGHT AND SIGN WITH NEW TRAFFIC SIGNAL AND SIGN ("STOP HERE ON RED") AT EACH END OF BRIDGE AS DETAILED ON THIS SHEET (ALVA & BIG CARLOS DRAW BRIDGES).
2. INSTALL NEW ADVANCE WARNING SIGN ("DRAW BRIDGE AHEAD") AT NORTHBOUND APPROACH TO BIG CARLOS DRAW BRIDGE AS DETAILED ON THIS SHEET.

QUANTITIES	"STOP HERE ON RED" SIGNAL	"DRAW BRIDE AHEAD" SIGNAL
ALVA DRAW BRIDGE	2	---
BIG CARLOS DRAW BRIDGE	2	1
TOTAL (AS)	4	1

NOTES:

1. REPLACE EXISTING TRAFFIC SIGNALS WITH NEW TRAFFIC SIGNALS ON THE ALVA AND BIG CARLOS DRAW BRIDGES. THE PLAN VIEW OF THE BIG CARLOS DRAW BRIDGE IS SHOWN ABOVE. REFER TO SHEET B-5 FOR THE LOCATION OF TRAFFIC SIGNALS ON THE ALVA DRAW BRIDGE. LOCATE NEW SIGNALS IN THE IDENTICAL LOCATION AS THE EXISTING SIGNALS.
2. NEW TRAFFIC SIGNALS TO BE MODEL TS-1201 (12" LENS) TRAFFIC WARNING SIGNAL AS FURNISHED BY B & B ELECTROMATIC, NORWOOD, LA (504-629-5234) OR APPROVED EQUAL. THE TRAFFIC SIGNAL SHALL BE WEATHERPROOF, CORROSION RESISTANT AND INCLUDE A GONG.
3. NO INTERUPTION OF SERVICE IS PERMITTED UNLESS FLAGMAN IS PROVIDED BY CONTRACTOR. COST OF FLAGMAN TO BE INCIDENTAL TO THE MOVABLE BRIDGE SIGNAL PAY ITEM.
4. FURNISH AND INSTALL NEW TRAFFIC SIGNALS AND SIGNS ACCORDING TO THE ROADWAY AND TRAFFIC DESIG. STANDARDS, INDEX 17890.
5. CONTRACTOR TO SUBMIT SHOP DRAWINGS FOR THE TRAFFIC SIGNALS AND SIGNS TO BE APPROVED BY TH ENGINEER. SHOP DRAWINGS TO INCLUDE DETAILS TO MOUNT SIGN TO EXISTING BRIDGE. REFER TO EXISTI PLANS FOR EXISTING SIGNAL PEDESTALS.
6. PAY ITEM 712-70-121, MOVABLE BRIDGE SIGNAL, SHALL INCLUDE THE FOLLOWING:
   A. REMOVAL OF EXISTING SIGNALS AND SIGNS,
   B. FURNISHING NEW SIGNALS, SIGNS, GONGS, POSTS AND CONNECTION HARDWARE.
   C. INSTALLING NEW SIGNALS AND SIGNS INCLUDING MOUNTING OF SIGN TO EXISTING PEDESTAL.
   D. ALL ELECTRICAL CONNECTIONS TO EXISTING WIRING INCLUDING NEW CONDUIT AND WIRING FOR ADVANCE WARNING SIGN.
   E. DELIVERY OF EXISTING SIGNALS AND SIGNS TO LEE COUNTY MAINTENANCE.

REVISIONS

Date	By	Description	Date	By	Description

	Names	Dates
Drawn by	DEC	9/99
Checked by	LFS	10/99
Designed by	DEC	9/99
Checked by	LFS	10/99
Approved by	LFS	02/18/00

ENGINEER OF RECORD:
Kisinger Campo and Associates Corp.
2203 N. LOIS AVE.
SUITE 1200
TAMPA, FLORIDA 33607

LOGO: KCA

Lee COUNTY

DEPARTMENT OF TRANSPORTATION

SHEET TITLE: MOVABLE BRIDGE SIGNALS

PROJECT NAME: ALVA, BIG CARLOS & MATLACHA BASCULE BRIDGE REPAIR

Drawing

Index

19805.03
GATEMATL.DGN
SCALE: 1/8
REVISION: 0
02/18/00
LFS

BX1-87

BX1-87

BX1-88
BX1-88

EB-5A

FED. ROAD DIST. NO.	STATE	PROJECT NO.	FISCAL YEAR	SHEET NO.
3	FLA.			B-35

Elec. Toilet

Note: Circuit shown for 3 wire service.
For 4 wire service omit transformer (T23)
and use single pole breakers in panel (P24).

To Engine Battery

KEY

NO.	QUAN.	DESCRIPTION	LOCATION
1	1	Bascule span control unit	H.R.
2	1	Relief capstan	C.A.
3	1	Relief capstan	C.A.
4	1	Traveler, traffic gate	C.A.
5	1	Misc. electrical power, light and control equipment and wiring not enumerated herein	C.A.
6	1	Circuit breaker switch	C.A.
7	1	Circuit breaker switch	C.A.
8	1	Ammeter	C.A.
9	1	Open and closed gate indicator	C.A.
10	1	Voltmeter	C.A.
11	1	Voltmeter transfer switch	C.A.
12	1	Night gate control switch	C.A.
13	1	Night gate control receiver	C.A.
14	1	Protective control relay (overspeed)	C.A.
15	1	Protective control relay (undervoltage and reversing) (with disc gasket)	C.A.
16	1	Span motor running overload relay	C.A.
17	1	Time delay relay	H.R.
18	1	Night gate control receiver	H.R.
19	1	Low voltage relay (with contacts)	H.R.
20	1	Low voltage relay (with contacts)	H.R.
21	1	Frequency transducer	H.R.
22	1	Double pole, single throw control switch	C.A.
23	1	Transformer, 440 V. primary, 220 V. secondary, 1 KVA	C.A.
24	1	Circuit breaker panel	C.A.
25	1	Ammeter (with 3 phase selector switch)	C.A.
26	1	Ammeter (with 3 phase selector switch)	C.A.
27	1	Air heater	Control House
28	1	Ammeter shunt, 100 amp.	C.A.
29	1	Control desk	C.A.
30	1	Control desk switch	C.A.
31	1	Control desk switch	C.A.
32	1	Control desk switch	C.A.
33	1	Instrument transformer	Control House
34	1	Instrument heater	Control House
35	1	2 Color running light assembly	C.A.
36	3	Red lens for running light assembly	C.A.
37	3	Amber lens for running light assembly	C.A.
38	3	Green lens for running light assembly	C.A.
39	3	Clear lens for running light assembly	C.A.
40	1	Single receiver (or required to prevent transmitter in control desk, from operating)	C.A.
41	1	Receiver, 24 V. D.C. operated, 4 pole, 3 amp. contacts, explosion proof, type EBR-4	C.A.
42	1	Receiver, 24 V. D.C. operated, 4 pole, 3 amp. contacts, explosion proof, type EBR-4	C.A.
43	1	Limit switch, 24 V. D.C. operated, explosion proof, type EBL-4	C.A.
44	1	Limit switch, 24 V. D.C. operated, explosion proof, type EBL-4	C.A.
45	1	Limit switch, 24 V. D.C. operated, explosion proof, type EBL-4	C.A.
46	1	Limit switch, 24 V. D.C. operated, explosion proof, type EBL-4	C.A.
47	1	Limit switch, 24 V. D.C. operated, explosion proof, type EBL-4	C.A.
48	1	Limit switch, 24 V. D.C. operated, explosion proof, type EBL-4	C.A.
49	1	Limit switch, 24 V. D.C. operated, explosion proof, type EBL-4	C.A.
50	1	Limit switch, 24 V. D.C. operated, explosion proof, type EBL-4	C.A.
51	1	Limit switch, 24 V. D.C. operated, explosion proof, type EBL-4	C.A.
52	1	Limit switch, 24 V. D.C. operated, explosion proof, type EBL-4	C.A.
53	1	Limit switch, 24 V. D.C. operated, explosion proof, type EBL-4	C.A.
54	1	Limit switch, 24 V. D.C. operated, explosion proof, type EBL-4	C.A.
55	1	Limit switch, 24 V. D.C. operated, explosion proof, type EBL-4	C.A.
56	1	Limit switch, 24 V. D.C. operated, explosion proof, type EBL-4	C.A.
57	1	Limit switch, 24 V. D.C. operated, explosion proof, type EBL-4	C.A.
58	1	Limit switch, 24 V. D.C. operated, explosion proof, type EBL-4	C.A.
59	1	Limit switch, 24 V. D.C. operated, explosion proof, type EBL-4	C.A.
60	1	Limit switch, 24 V. D.C. operated, explosion proof, type EBL-4	C.A.
61	1	Limit switch, 24 V. D.C. operated, explosion proof, type EBL-4	C.A.
62	1	Limit switch, 24 V. D.C. operated, explosion proof, type EBL-4	C.A.
63	1	Limit switch, 24 V. D.C. operated, explosion proof, type EBL-4	C.A.
64	1	Limit switch, 24 V. D.C. operated, explosion proof, type EBL-4	C.A.
65	1	Limit switch, 24 V. D.C. operated, explosion proof, type EBL-4	C.A.
66	1	Limit switch, 24 V. D.C. operated, explosion proof, type EBL-4	C.A.

C.A. = Control Desk
H.R. = Machinery Room
Key as mounted on engine-generator unit may be altered by the engineer, if approved by the engineer.

LIMIT SWITCH SCHEDULE

#44 Span fully closed Limit switch
Span fully closed
Span not fully closed

#45 Span Limit switch
Span fully closed
" nearly "
" open
" fully "

#46 Lock Limit switch
Locks pulled
Locks driven

#47 Gate Limit switch
Gate raised
Gate lowered

SIZE OF UNITS

MOT. NO.	GENERATOR	MAIN MOTOR	LOCK MOTOR
1512-150	25 KW. 31 KVA 0.8 PF	15 HP	2 HP
5371-175	-	"	"
11310-3401	-	"	"
12360-3603	20 KW 30 KVA 0.667 PF	20 HP	

SIX SPAN CONTROLLER
Relay Panel 23 & 5 6
Lamps 6 3 0 2 1 0 0 1 2 3 4 5 6
Switch

SIX SPAN CONTROLLER
Relay Panel 23 & 5 6
Lamps 6 5 4 3 2 1 0 0 1 2 3 4 5 6
Switch

DOUBLE LEAF BASCULE - 220V, 3Ø, 60~, AUXILIARY GENERATOR, 2 LEAF MOTORS

STATE ROAD DEPARTMENT OF FLORIDA
BRIDGE DIVISION

ELEMENTARY WIRING DIAGRAM

REVISIONS		ROAD NO.	COUNTY		PROJECT NO.
Date	Description	S-78	LEE		12560-3603
9/66	Added Lock		Number	Date	APPROVED BY
7/68	Revised Title & Circuit	Drawn by	C.H.U.	5-56	
		Checked by			
		Quantities by			
		Checked by			
		Traced by	C.E.S.	5-56	

Drawing No. 1 OF 1
Index No. 3723

BX1-88
BX1-88

BX1-89
BX1-89

EB-1B

FED. ROAD DIV. NO.	STATE	PROJECT NO.	FISCAL YEARS	SHEET NO.
3	FLA.	12530-3/53	63-64	B-12

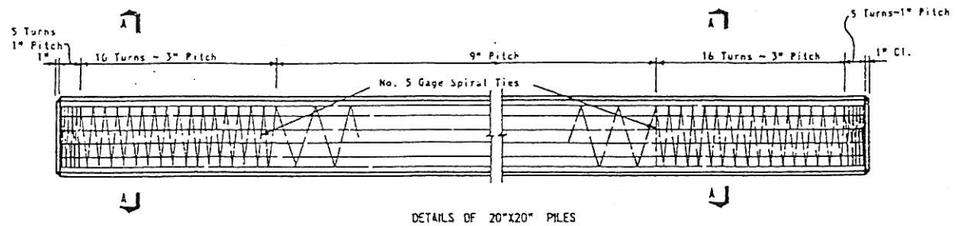

DETAILS OF 20"X20" PILES
Maximum Length- 75 Ft.-Single Point Pick-up
Maximum Length-107 Ft.-Double Point Pick-up

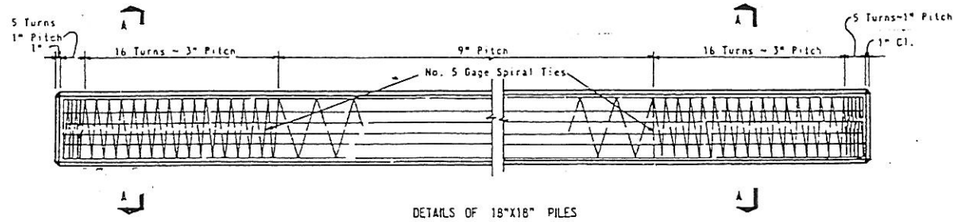

DETAILS OF 18"X18" PILES
Maximum Length-70 Ft.-Single Point Pick-up
Maximum Length-95 Ft.-Double Point Pick-up

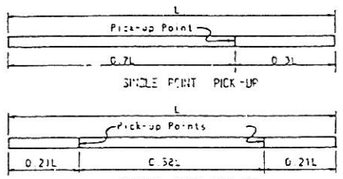

SINGLE POINT PICK-UP

DOUBLE POINT PICK-UP

NOTE: Piles shall be marked at Pick-up Points to indicate proper points for attaching handling lines.

DETAILS OF PRESTRESSED CONCRETE PILES

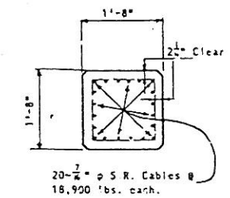

SECTION A-A

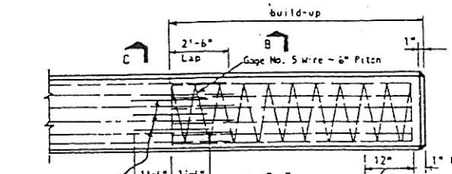

PILE BUILD-UP

NOTE: If additional driving is required, 2" pitch shall be used for spiral wire within these limits.

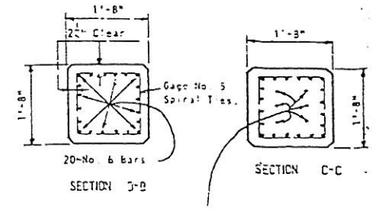

SECTION B-B

SECTION C-C

Provide 6-#10 Dowels 3'-0" Long.

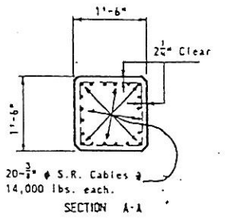

SECTION A-A

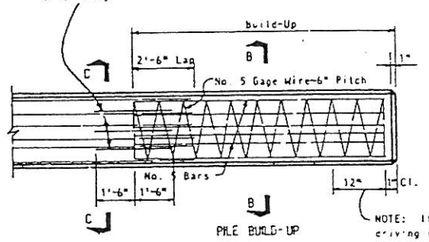

PILE BUILD-UP

NOTE: If additional driving is required, 2" pitch shall be used for spiral wire within these limits.

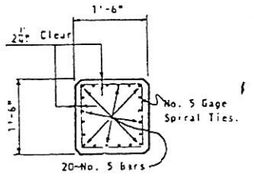

SECTION B-B

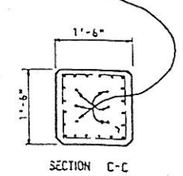

SECTION C-C

Provide 6-#10 Dowels 3'-0" long

NOTE: All build-ups shall be made with Class P Concrete.

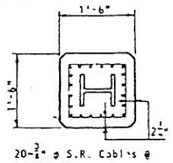

SECTION A-A

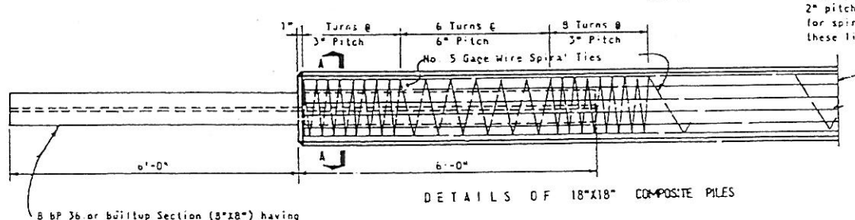

8 BP 36 or built-up Section (5"x8") having flange plates ½" min. thickness and a web plate ½" min. thickness or 2-90 lb. per yard Rails welded back to back.

DETAILS OF 18"X18" COMPOSITE PILES

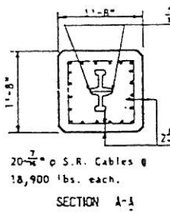

SECTION A-A

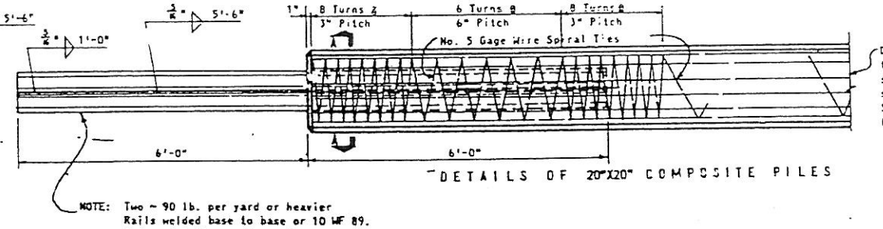

NOTE: Two ~ 90 lb. per yard or heavier Rails welded base to base or 10 WF 89. Salvaged Rails may be used.

DETAILS OF 20"X20" COMPOSITE PILES

GENERAL NOTES

SPIRAL TIES: Each wrap of spiral shall be tied to at least two corner Cables.

MATERIAL FOR SPIRAL TIES: Spirals may be manufactured from steel meeting requirements of any grade of reinforcing steel or hard drawn wire.

PILE CUTOFFS: In cutting of Concrete Piles an abrasive saw shall be used to score the Concrete at cut off Elevation to the approximate depth of Reinforcing Steel. As an alternate to sawing, scoring may be done with a templated power drill.

OCTAGONAL PILES: Prestressed Octagonal Piles of equivalent strength may be substituted for square piles. Details of pile shall be submitted to the Engineer for Approval.

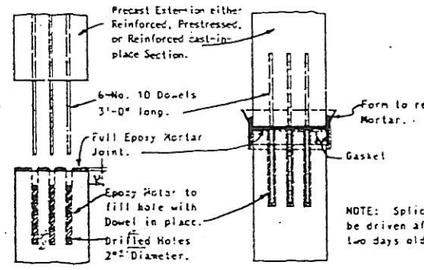

TYPICAL BONDING DETAILS FOR 18"□ & 20"□ PILE

ALTERNATE EPOXY BONDED SPLICE

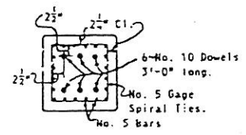

18"□ & 20"□ PILES

NOTE: Spliced Piles may be driven after splice is two days old.

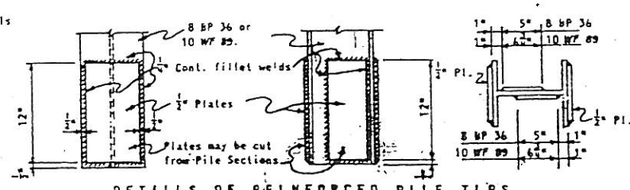

DETAILS OF REINFORCED PILE TIPS

NOTE: Reinforced Pile Tips required only when shown on the Plans or ordered by the Engineer. Each Authorized Reinforced Tip shall be paid for as four additional feet of Composite Concrete and Steel Pile Reinforcement.

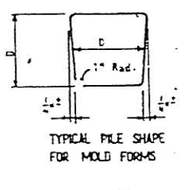

TYPICAL PILE SHAPE FOR MOLD FORMS

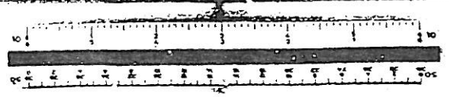

STATE ROAD DEPARTMENT OF FLORIDA
BRIDGE DIVISION
TYPICAL DETAILS OF 18" SQUARE AND 20" SQUARE PRESTRESSED PILES

REVISIONS		ROAD NO.	COUNTY	PROJECT NO.
Dates	Descriptions	S-865	LEE	12530-3/53
			Names	Dates
		Detailed by	C.T.F.	11-61
		Checked by	J.L.M.	11-61
		Quantities by		
		Checked by		
		Traced by	C.T.F.	11-61

APPROVED BY: T. W. Demmon, Engineer of Bridges
Date 1/61 Sheet No. 3673

BX1-89
BX1-89

BX1-90

EB-2B

FED. ROAD DIV. NO.	STATE	PROJECT NO.	FISCAL YEAR	SHEET NO.
3	FLA.	12530-3153	61	B-35

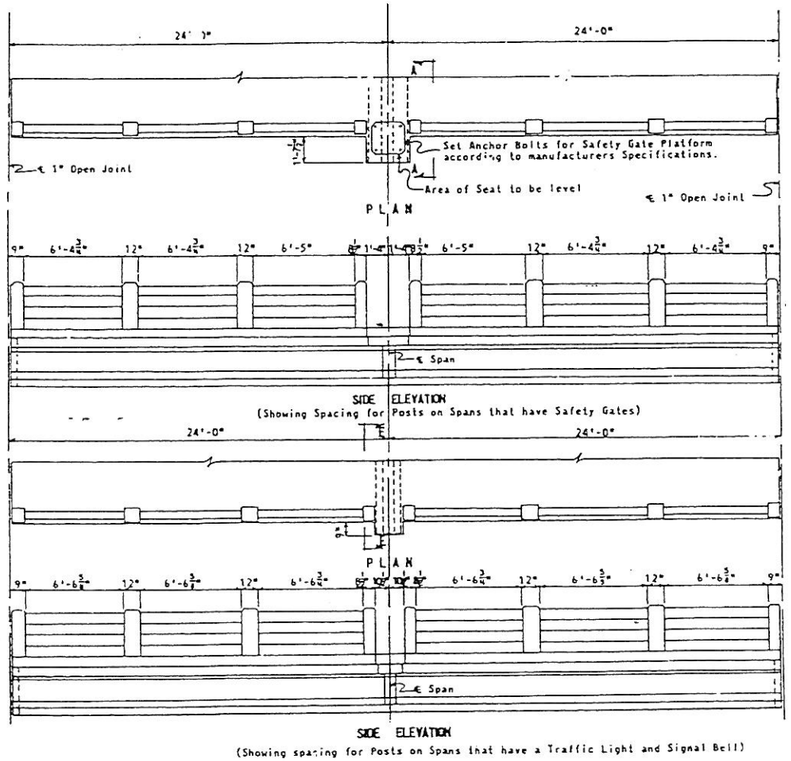

SIDE ELEVATION

(Showing spacing for Posts on Spans that have a Traffic Light and Signal Bell)

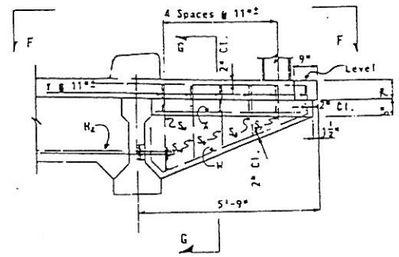

SECTION E-E

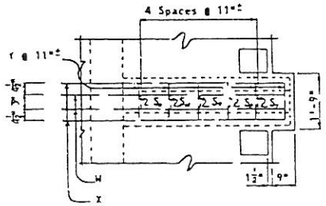

VIEW F-F

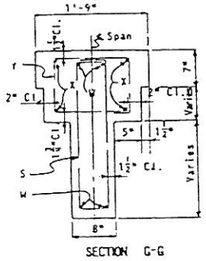

SECTION G-G

NOTE: The Estimated Quantities shown are in addition to the Estimated Quantities shown on the Superstructure Drawings that have Safety Gate Platforms or Traffic Light and Signal Bell Platforms.

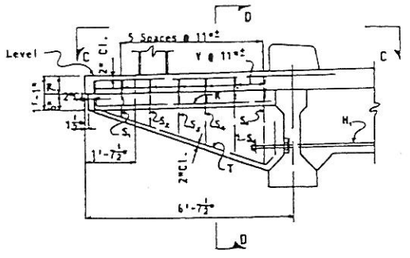

SECTION A-A

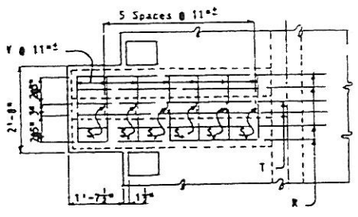

VIEW C-C

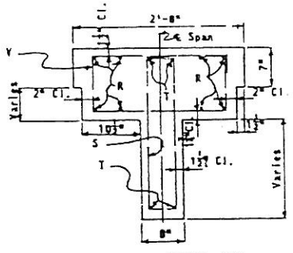

SECTION D-D

* Bar H_1 is smooth, round structural or intermediate grade steel rod with course threads, heavy duty nuts & 4"X4"X⅜" Pl. Bar H_1 shall be substituted for Bar H in Superstructures that have Safety Gate Platforms.

** Bar H_2 is smooth, round structural or intermediate grade steel rod with course threads, heavy duty nuts & 4"X4"X⅜" Pl. Bar H_2 shall be substituted for Bar H in Superstructures that have Traffic Light Platform.

BILL OF REINFORCING STEEL*

MARK	SIZE	NO. REQUIRED (SAFETY GATE PLATFORM)	NO. REQUIRED (TRAFFIC LIGHT & SIGNAL BELL PLATFORM)	LENGTH
H_1 *	1" ø	1	———	30'- 4"
H_2 **	1" ø	———	1	29'- 4"
R	4	4	———	14'- 1"
S_1	4	1	———	3'- 5"
S_2	4	1	———	4'- 1"
S_3	4	1	———	4'- 9"
S_4	4	1	———	5'- 5"
S_5	4	1	———	6'- 1"
S_6	4	1	———	6'- 9"
S_7	4	———	1	3'- 9"
S_8	4	———	1	4'- 7"
S_9	4	———	1	5'- 3"
S_{10}	4	———	1	6'- 1"
S_{11}	4	———	1	6'- 9"
T	8	2	———	17'- 3"
W	8	———	2	15'- 2"
V	4	7	———	6'- 6"
X	4	———	2	12'- 3"
Y	4	———	6	4'- 8"

BENDING DIAGRAMS

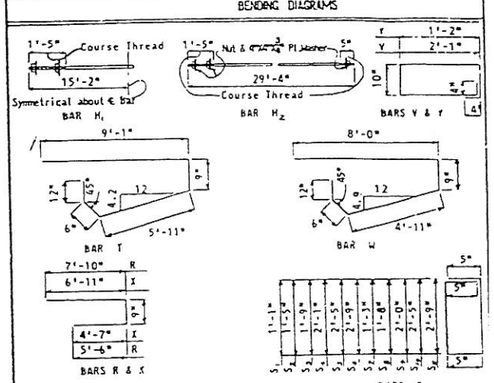

NOTE: All bar dimensions are out-to-out.

ESTIMATED QUANTITIES*

ITEM	SAFETY GATE PLATFORM UNIT	SAFETY GATE PLATFORM QUANTITY	TRAFFIC LIGHT & SIGNAL BELL PLATFORM UNIT	TRAFFIC LIGHT & SIGNAL BELL PLATFORM QUANTITY
Class A Concrete (Approach Spans)	Cu. Yd.	.53	Cu. Yd.	.31
Reinforcing Steel	Lb.	186	Lb.	136

*Concrete and reinforcing steel quantities shown are for one Safety Gate Platform or one Traffic Light & Signal Bell Platform.

DETAILS OF TRAFFIC LIGHT AND SAFETY GATE PLATFORMS HANDRAIL FOR 48 FT. SPAN - STRUCTURE A

STATE ROAD DEPARTMENT OF FLORIDA
BRIDGE DIVISION

BRIDGES BETWEEN ESTERO ISLAND AND BONITA BEACH

REVISIONS Dates	Description

ROAD NO.	COUNTY	PROJECT NO.
S-865	LEE	12530-3153

	Names	Dates
Detailed by	B.R.L.	1-61
Checked by	J.L.P.	1-61
Quantities by	B.R.L.	1-61
Checked by	J.L.P.	1-61
Traced by	B.R.L.	1-61

APPROVED BY: T. W. Brennan, Assistant State Engineer

Drawing No. 3702 60 — Shelving Nos. 7700

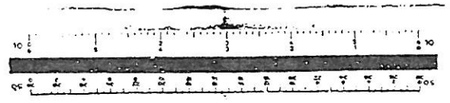

BX1-90

BX1-91
BX1-91

EB-4B

FED. ROAD DIV. NO.	STATE	PROJECT NO.	FISCAL YEAR	SHEET NO.
3	FLA.	12530-3159	'63	6-32

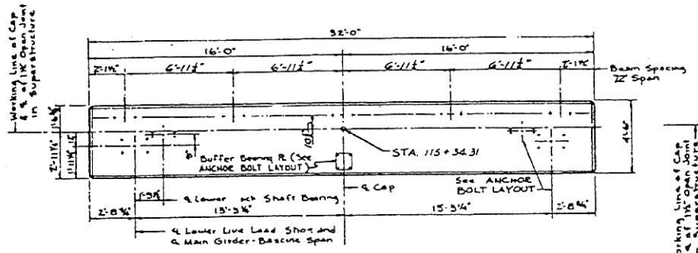

PLAN OF CAP

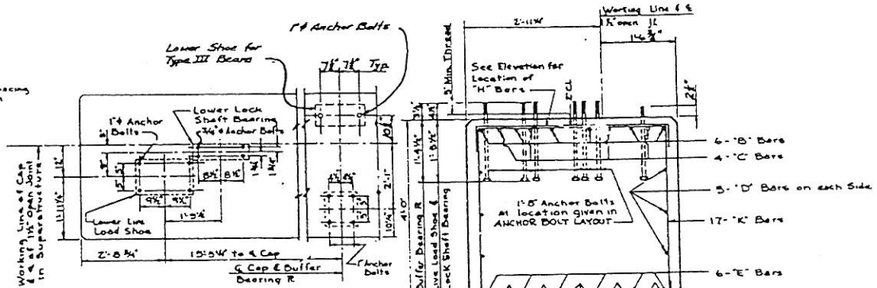

ANCHOR BOLT - LAYOUT

SECTION A-A

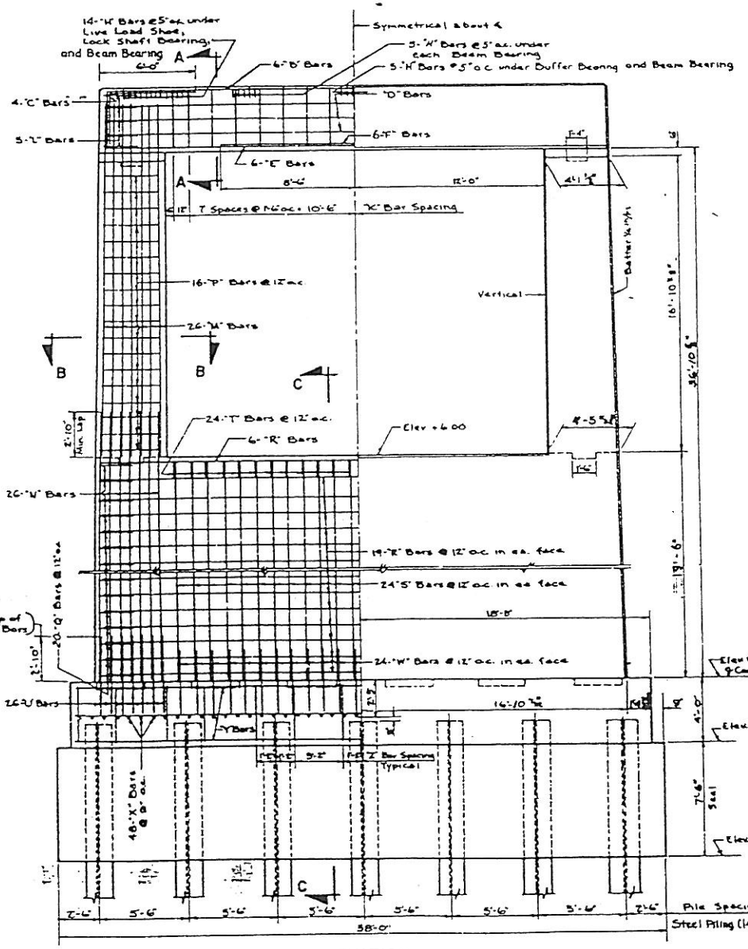

ELEVATION

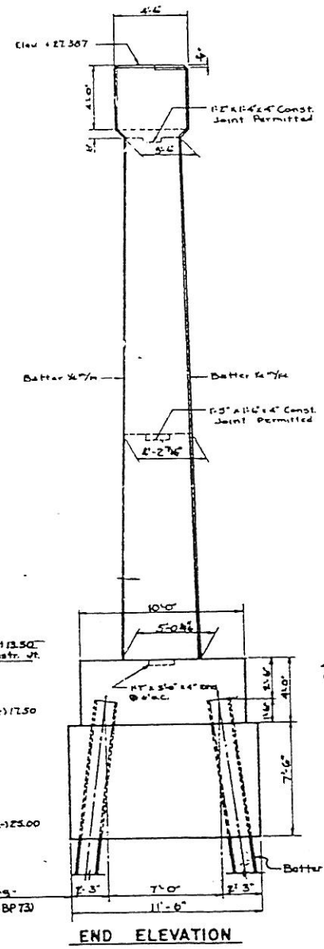

END ELEVATION

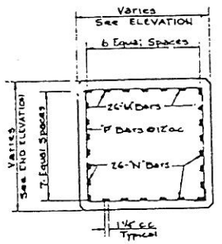

SECTION B-B

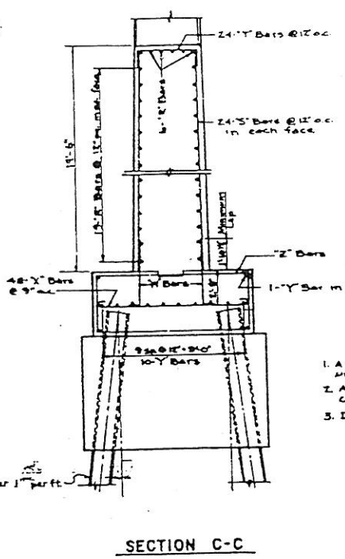

SECTION C-C

Notes

1. All reinforcement to have 3" cover unless otherwise noted.
2. All exposed outside edges of cap, columns and strut to be chamfered ¾"x¾".
3. Design load for piles: 55 Tons.

BILL OF REINFORCING STEEL

MARK	SIZE	No REQ'D	LENGTH	LOCATION	BENDING
B	9	6	36'-1"	Top of Cap	See Diagram
C	9	8	8'-1"	Top of Cap	See Diagram
D	6	6	31'-6"	Sides of Cap	Straight
E	10	6	31'-8"	Bottom of Cap	Straight
F	10	6	17'-0"	Bottom of Cap	Straight
H	4	43	5'-0"	Top of Cap	See Diagram
K	5	17	16'-2"	Cap Stirrups	See Diagram
L	6	10	8'-0"	End of Cap	See Diagram
M	9	32	20'-5"	Column	Straight
N	9	32	22'-4"	Column	Straight
P	5	32	Varies - See Diagram Ave. = 18'-3"	Column Stirrups	See Diagram
Q	5	40	Varies See Diagram Ave. = 8'-1½"	Col. Sides at Strut	See Diagram
R	5	44	32'-4"	Strut	Straight
S	6	48	19'-3"	Strut	Straight
T	6	24	31'-9"	Top of Strut	See Diagram
U	9	52	31'-7"	Dowels in Footing	See Diagram
W	6	48	4'-8"	Dowels in Footing	See Diagram
X	6	48	10'-6"	Footing	See Diagram
Y	6	14	34'-0"	Footing	Straight
Z	6	14	26'-8	Footing Stirrups	See Diagram

BENDING DIAGRAMS

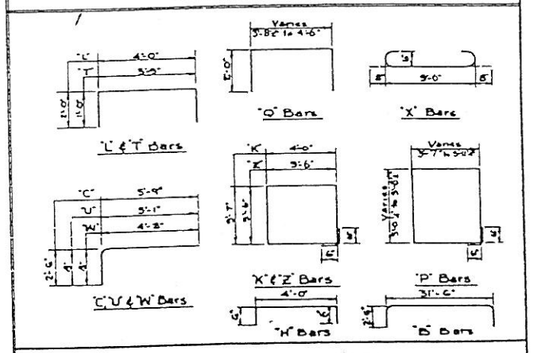

ESTIMATED QUANTITIES

ITEM	UNIT	QUANTITY
Class A Concrete (Trunnion Pier & Rest Pier)	Cu. Yd.	207.43
Steel Concrete	Cu. Yd.	120.81
Reinforcing Steel	Lb.	17,901
Steel Piling Furnished (14 BP 73)	Lin. Ft.	*
Steel Piling Driven (14 BP 73)	Lin. Ft.	*

* For Piling Quantity, see Estimated Bridge Quantities on Sheet B-1.

STRUCTURE A - REST PIER I-E

STATE ROAD DEPARTMENT OF FLORIDA
BRIDGE DIVISION

BRIDGES BETWEEN ESTERO ISLAND AND BONITA BEACH

REVISIONS		ROAD NO.	COUNTY	PROJECT NO.
Date	Description	S-865	LEE	12530-3153
1-64	4"x12"Step on Cap Seat			

	Checked	Date
Detailed by	I.L.P.	1-61
Checked by	R.E.N.	4-61
Quantities by	R.E.N.	4-61
Checked by	N.W.B.	4-61
Traced by		

APPROVED BY

Drawing No. 37 of 60

Bridge No. 7700

BX1-91
BX1-91

BX1-92
BX1-92

EB-4B

FED. ROAD DIV. NO.	STATE	PROJECT NO.	FISCAL YEAR	SHEET NO.
3	FLA.	12530-3153	'63	E-3.3

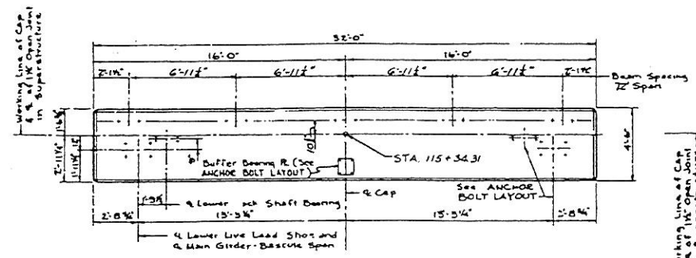

PLAN OF CAP

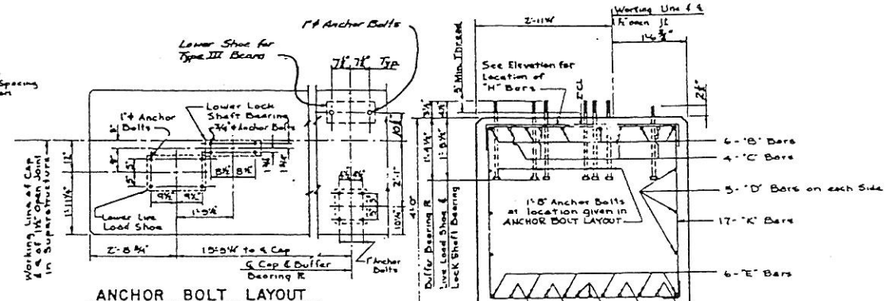

ANCHOR BOLT LAYOUT

SECTION A-A

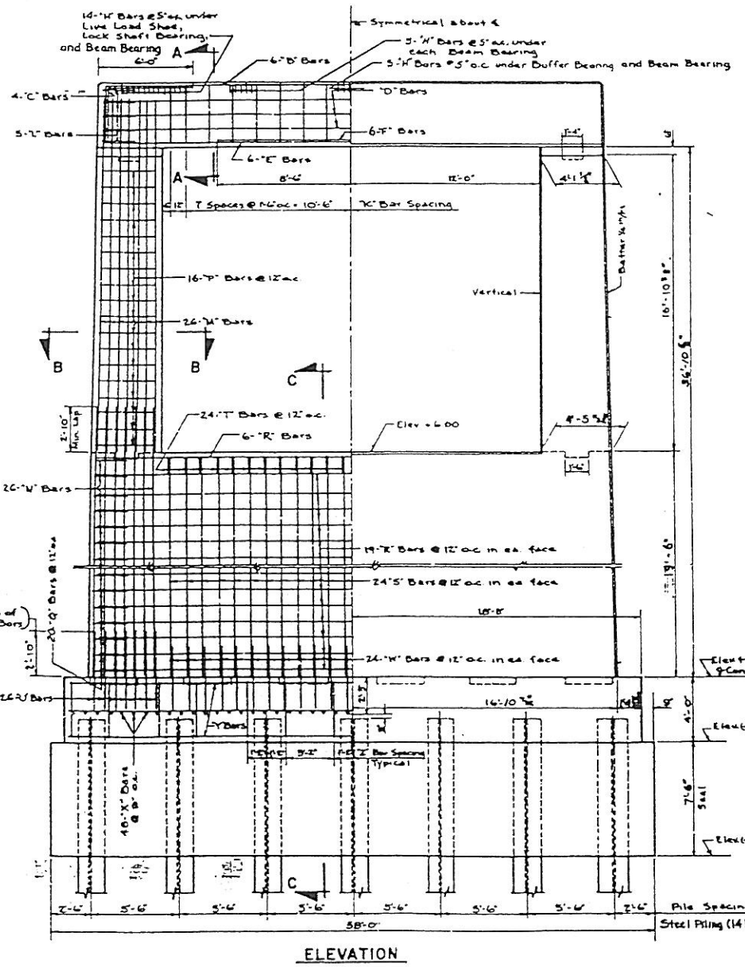

ELEVATION

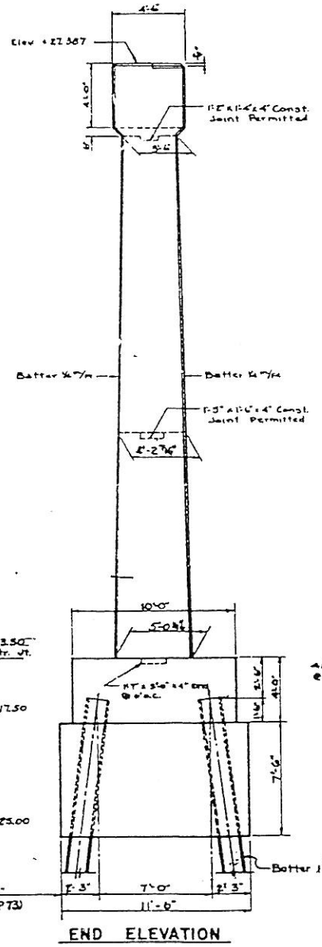

END ELEVATION

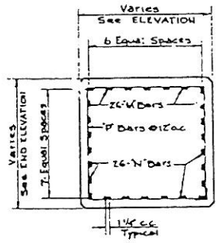

SECTION B-B

SECTION C-C

Notes

1. All reinforcement to have 3" cover unless otherwise noted.
2. All exposed outside edges of cap, columns and strut to be Chamfered 1½" x 1½".
3. Design load for piles: 55 Tons.

BILL OF REINFORCING STEEL

MARK	SIZE	No REQD	LENGTH	LOCATION	BENDING
B	9	6	56'-1"	Top of Cap	See Diagram
C	9	8	8'-1"	Top of Cap	See Diagram
D	6	6	31'-6"	Sides of Cap	Straight
E	10	6	31'-5"	Bottom of Cap	Straight
F	10	6	17'-0"	Bottom of Cap	Straight
H	4	43	5'-0"	Top of Cap	See Diagram
K	5	17	16'-2"	Cap Stirrups	See Diagram
L	6	10	8'0"	End of Cap	See Diagram
M	9	52	20'-5"	Column	Straight
N	9	52	22'-4"	Column	Straight
P	5	32	Varies - See Detail Avg. = 18'-3"	Column Stirrups	See Diagram
Q	3	40	Varies - See Detail Avg. = 8'-11½"	Col. Sides at Strut	See Diagram
R	5	44	32'4"	Strut	Straight
S	6	48	19'-3"	Strut	Straight
T	6	24	31'-5"	Top of Strut	See Diagram
U	9	52	31'-7"	Dowels in Footing	See Diagram
W	6	48	4'-8"	Dowels in Footing	See Diagram
X	6	48	10'-10"	Footing	See Diagram
Y	6	14	36'-0"	Footing	Straight
Z	6	14	26'8	Footing Stirrups	See Diagram

BENDING DIAGRAMS

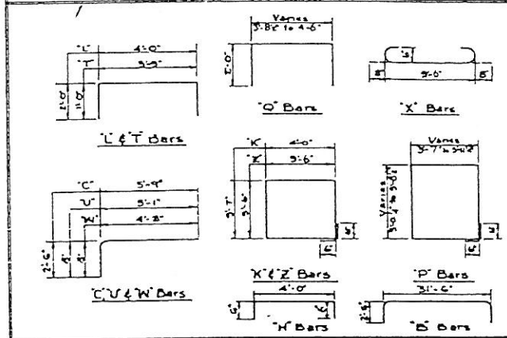

ESTIMATED QUANTITIES

ITEM	UNIT	QUANTITY
Class A Concrete (Trunnion Pier & Rest Pier)	Cu. Yd.	207.43
Seal Concrete	Cu. Yd.	120.81
Reinforcing Steel	Lb.	17,961
Steel Piling Furnished (14 BP 73)	Lin. Ft.	*
Steel Piling Driven (14 BP 73)	Lin. Ft.	*

* For Piling Quantity, see Estimated Bridge Quantities on Sheet B-1.

STRUCTURE NO. - REST PIER I-E

STATE ROAD DEPARTMENT OF FLORIDA
BRIDGE DIVISION

BRIDGES BETWEEN ESTERO ISLAND AND BONITA BEACH

REVISIONS		ROAD NO.	COUNTY	PROJECT NO.
Date	Description	S-865	LEE	12530-3153
1-64	Sq'Ney on Cap Seal			

	Initials	Date	APPROVED BY
Detailed by	I.L.P.	1-61	
Checked by	R.E.N.	4-61	
Quantities by	R.E.N.	4-61	
Checked by	N.W.B.	4-61	
Traced by			

Drawing No. 37 of 60 | Project No. 7700

BX1-92
BX1-92

BX1-93
BX1-93

EB-5B

FED. ROAD DIV. No.	STATE	PROJECT NO.	FISCAL YEAR	SHEET NO.
3	FLA.	12530-3153	63	B-39

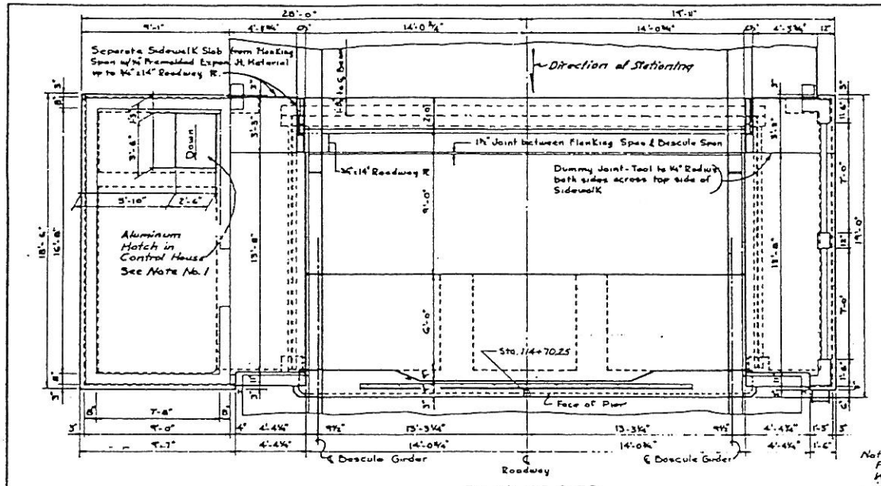

PLAN OF PIER

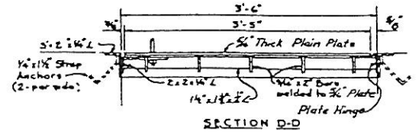

SECTION D-D

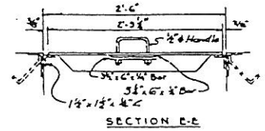

SECTION E-E

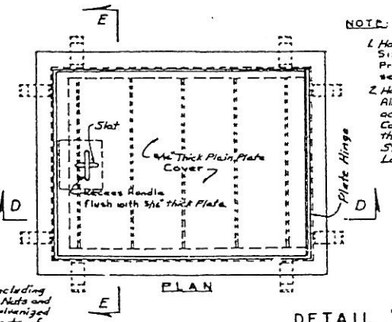

PLAN

DETAIL "Y"

NOTE:

1. Hatch located in Control House: Size of Slab opening 3'-6" x 2'-6". Provision shall be made to hold cover securely while in open position
2. Hatch Cover and Frames shall be Aluminum Alloy 6061-T6 fabricated according to the details shown. Hatch Cover and Frame shall be included in the Contract Lump Sum Price for Structural Steel (Flanking Spans, Ladders and Platforms).

Note: All Steel for Ladders including Plates, Stringers, Bars, Bolts, Nuts and Washers shall be hot dip galvanized in accordance with requirements of A.S.T.M. Specification Designation A-123. Welding of parts shall be done prior to galvanizing.

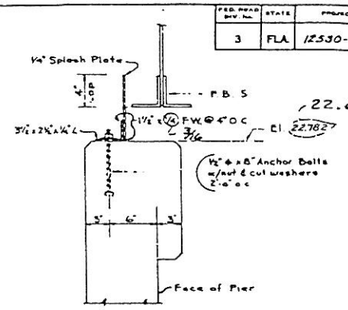

SECTION F-F

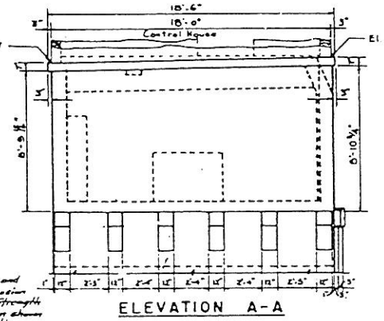

ELEVATION A-A

Note: An Aluminum Ladder and Platform of approved Corrosion Resistant Alloys and of strength equal to the Steel Design shown may be substituted at the Option of the Contractor.

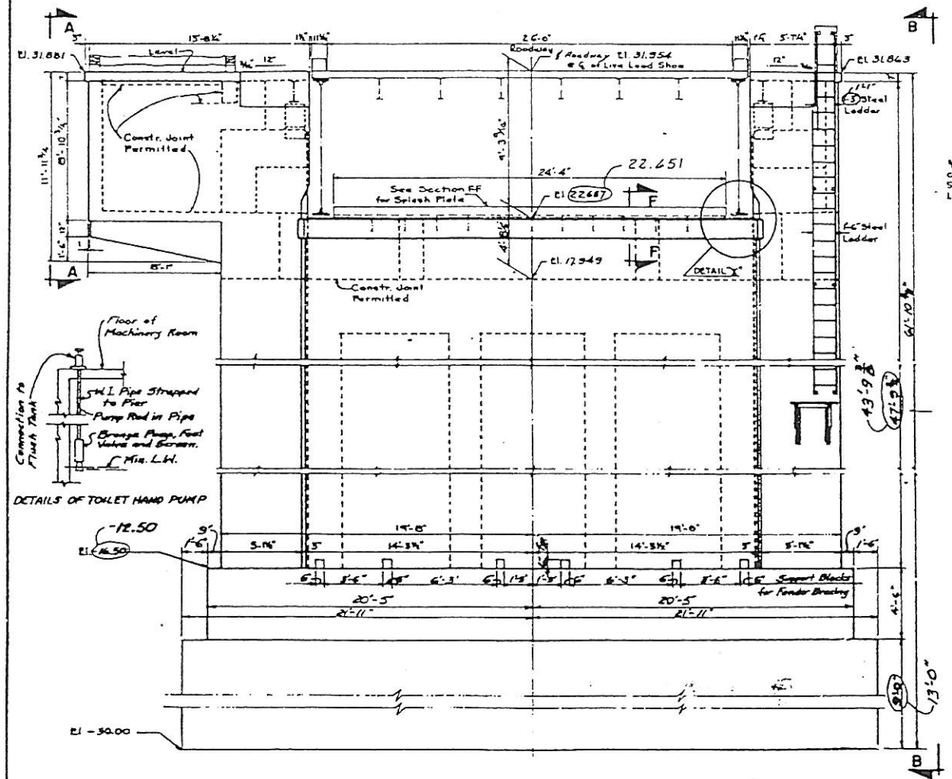

FRONT ELEVATION

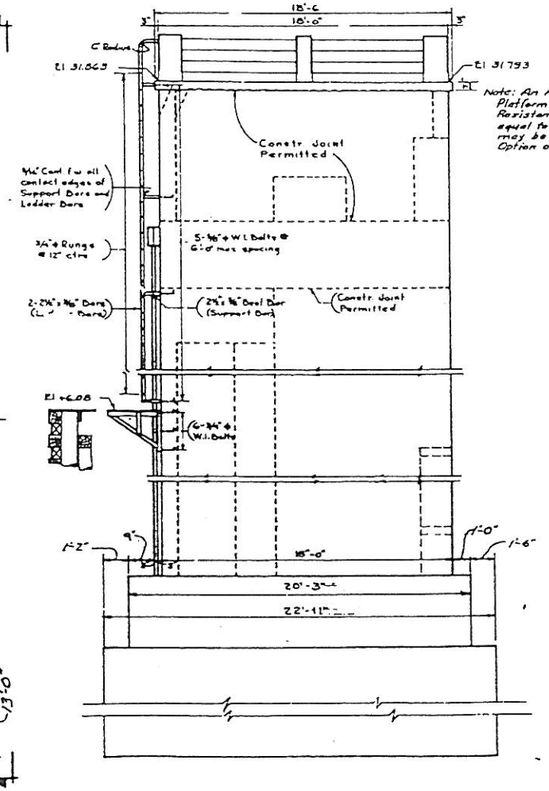

ELEVATION B-B

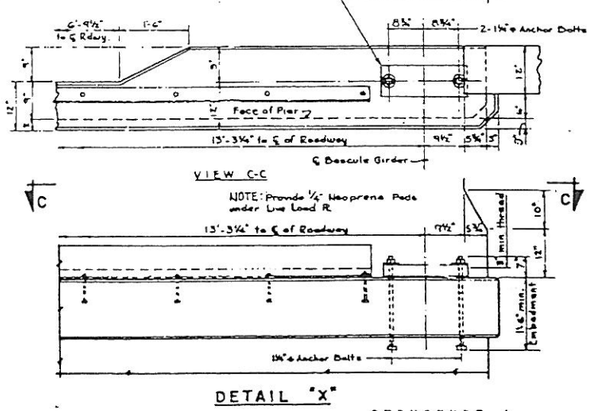

DETAIL "X"

STRUCTURE A

TRUNNION PIER - GENERAL LAYOUT

STATE ROAD DEPARTMENT OF FLORIDA
BRIDGE DIVISION

BRIDGES BETWEEN ESTERO ISLAND AND BONITA BEACH

REVISIONS		ROAD NO.	COUNTY	PROJECT NO.
Date	Description	S-865	LEE	12530-3153
1-64	Revised Plan Title Block		Drawn	Checked
		Detailed by	VLD	1-61
		Checked by	RLT	2-61
		Quantities by		
		Checked by		
		Traced by		

APPROVED BY: T. W. [illegible]
Assistant State Highway Engineer

Drawing No. 36 of 60 | Index No. 7700

BX1-93
BX1-93

BX1-94

EB-6B

FED. ROAD DIV. NO.	STATE	PROJECT NO.	FISCAL YEAR	SHEET NO.
3	FLA	12530-3153	63	B-46

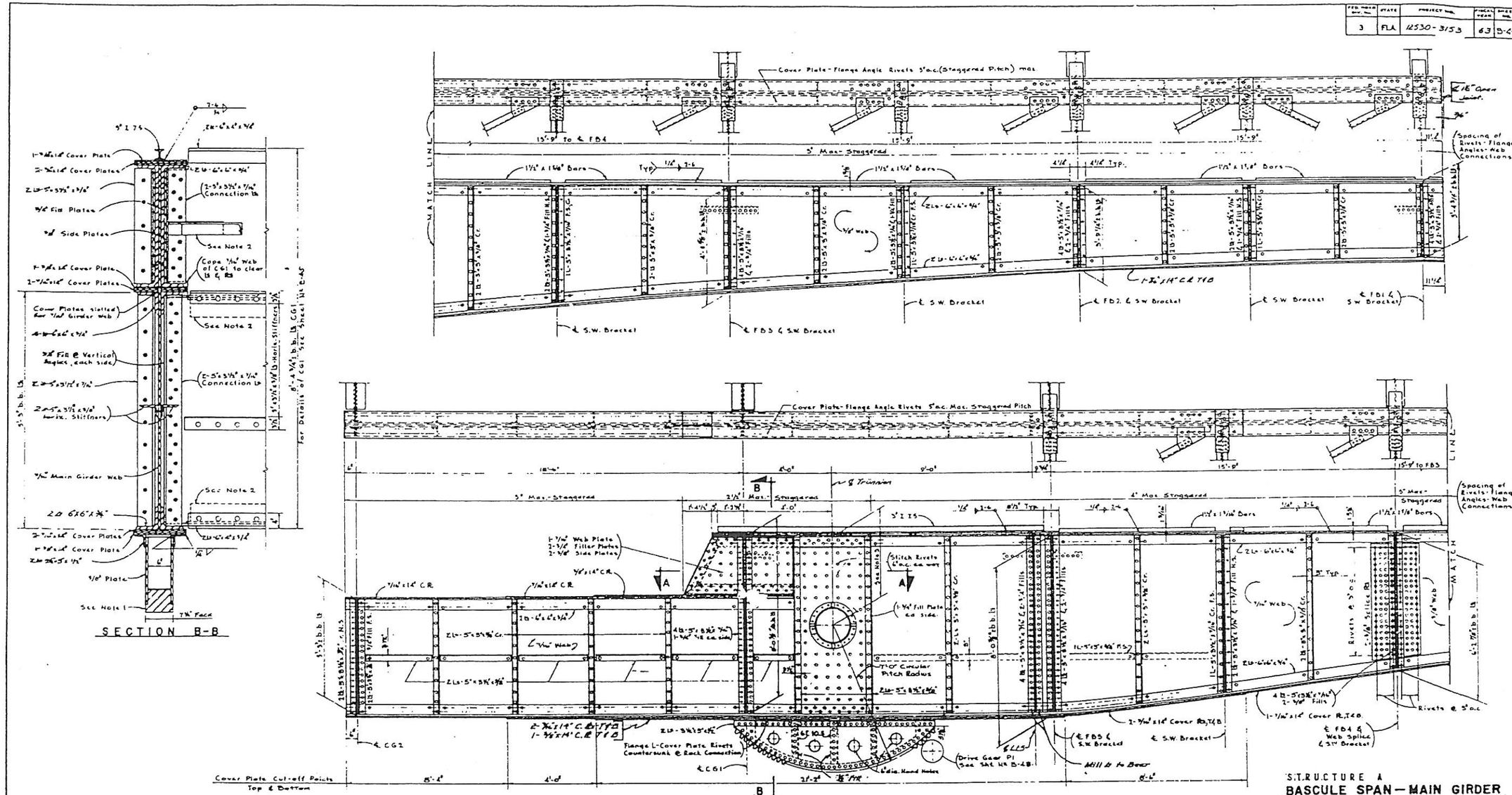

NOTES

1. All parts of rack shall be structural steel except Teeth section, which shall be Cast Steel.
2. For Details of Bracing between CG1 & CG2 and between CG1 and FB5, see Sheet No. B-48.
3. This dimension to be set by Contractor see Special Provisions. These plans based on the assumption that this dimension equals 2'-0"
4. For details of Trunnion Collar, see Sheet B-50.
5. All steel in Rack and Trunnion Collar shall be included in the Contract Lump Sum Price for Machinery and Castings. All other steel shall be included in Contract Lump Sum Price for Structural Steel (Bascule Leaf)
6. Rivets shall be countersunk as required to provide smooth bearing for Live Load Shoes, etc.
7. For General Notes see Sheet No. B-1.

STRUCTURE A
BASCULE SPAN—MAIN GIRDER

STATE ROAD DEPARTMENT OF FLORIDA
BRIDGE DIVISION

BRIDGES BETWEEN ESTERO ISLAND AND BONITA BEACH

REVISIONS		ROAD NO.	COUNTY	PROJECT NO.
Dates	Descriptions	S-865	LEE	12530-3153

	Name	Dates
Detailed by	P.S.	7-57
Checked by	J.C.S.	7-57
Quantities by	B.G.C.	8-58
Checked by	J.E.S.	8-58
Traced by	P.S.	7-57

APPROVED BY

Drawing No. 45 of 60 | Index No. 7700

BX1-94

BX1-95

EB-7B

FED. ROAD DIV. NO.	STATE	PROJECT NO.	FISCAL YEAR
3	FLA	12530-3153	63

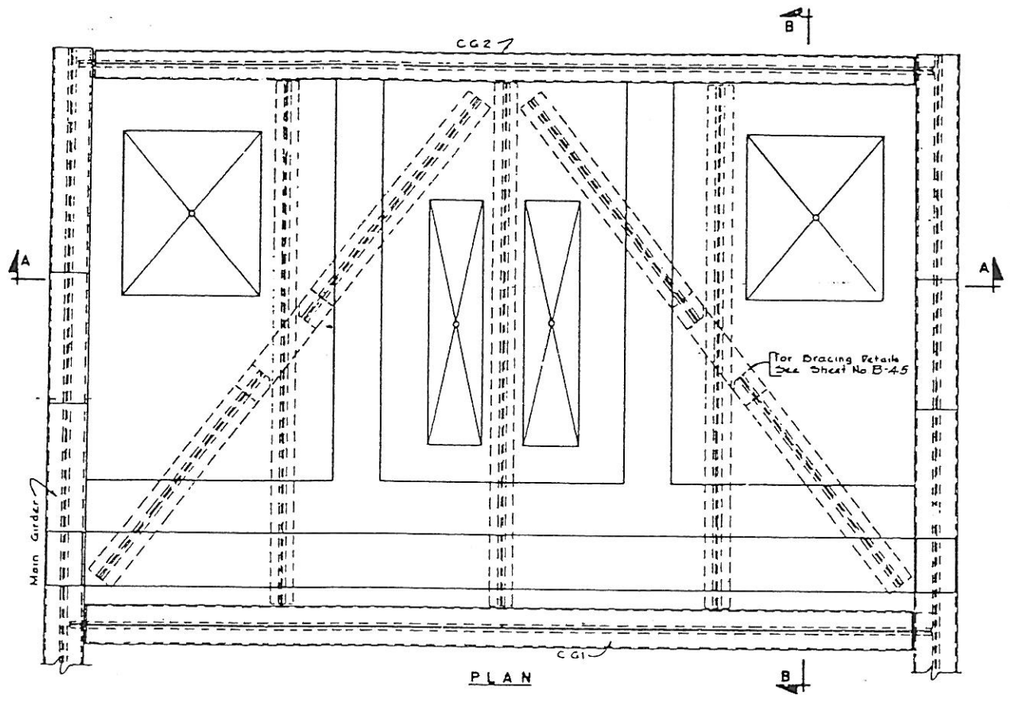

PLAN

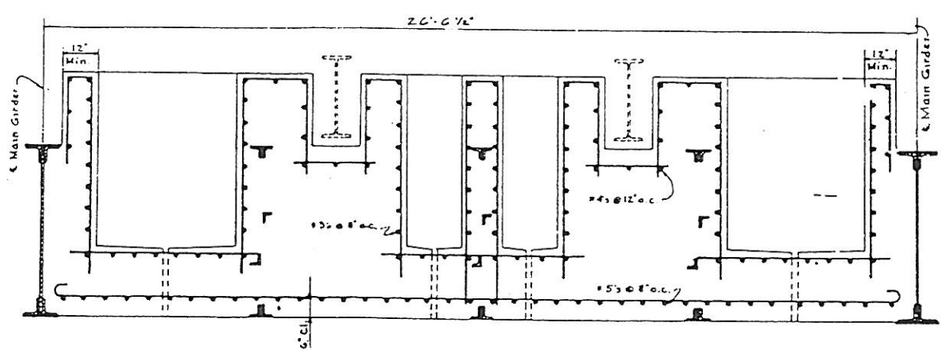

SECTION A-A

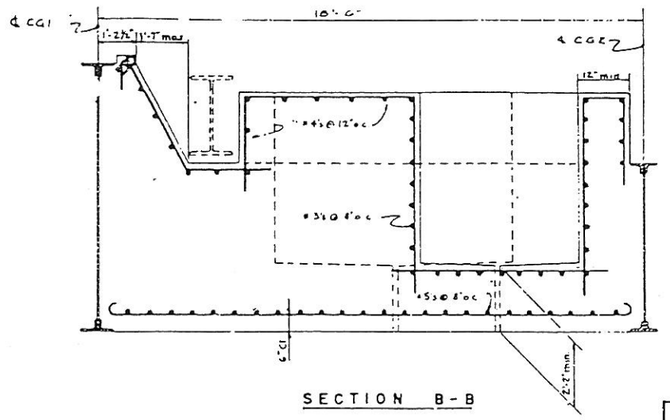

SECTION B-B

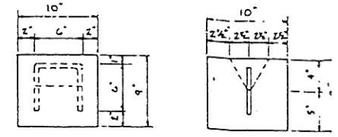

COUNTERWEIGHT BLOCK

Weight of one Block : 72 #

Blocks equal to 5 % of the calculated counterweight shall be provided (370 ± Required)

ESTIMATED QUANTITIES		
ITEM	UNIT	QUANTITY
*Class "A" Concrete (Counterweight)	Cu. Yd	115
Reinforcing Steel	Lb.	2,800

*146 Lb per cu. ft.

NOTES:

1. For General Notes, see Sheet B-1.
2. All reinforcing shall have 3" cover unless otherwise noted.
3. Reinforcing: #5 bars at the bottom.
   #4 bars at the top.
   #3 bars at pockets.
4. Counterweight dimensions and center of gravity sh be checked by the Contractor using weight determin from approved shop plans (See Section 330.6, Standard Specifications).
5. The Contractor shall be responsible for final balanci of the leaf. (See Section 330.6, Standard Specs.).
6. This sheet is intended as a guide only, and is not t scale. Contractor will be required to submit shop drawings showing details of counterweight, and shall submit calculations showing balance of leaf See Section 330.6 of the Standard Specificati

STRUCTURE A

COUNTERWEIGHT - GENERAL DETAI

STATE ROAD DEPARTMENT OF FLORIDA
BRIDGE DIVISION

BRIDGES BETWEEN ESTERO ISLAND AND BONITA BEA

REVISIONS		ROAD NO.	COUNTY	PROJECT NO.
Dates	Description	S-865	LEE	12530-3153

	Names	Dates	APPROVED BY
Detailed by	E.A.H.	7-57	
Checked by	J.E.S.	7-57	
Quantities by	L.K.	8-58	
Checked by	B.G.C.	9-58	Drawing No. 46 of 60
Traced by	E.A.H.	7-57	Index No. 7700

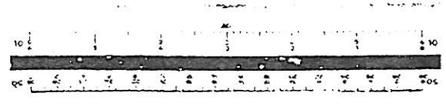

BX1-95

BX1-96

EB-8B

FED. ROAD DIV. NO.	STATE	PROJECT NO.	FISCAL YEAR	SHEET NO.
3	FLA	12530-3153	63	B-48

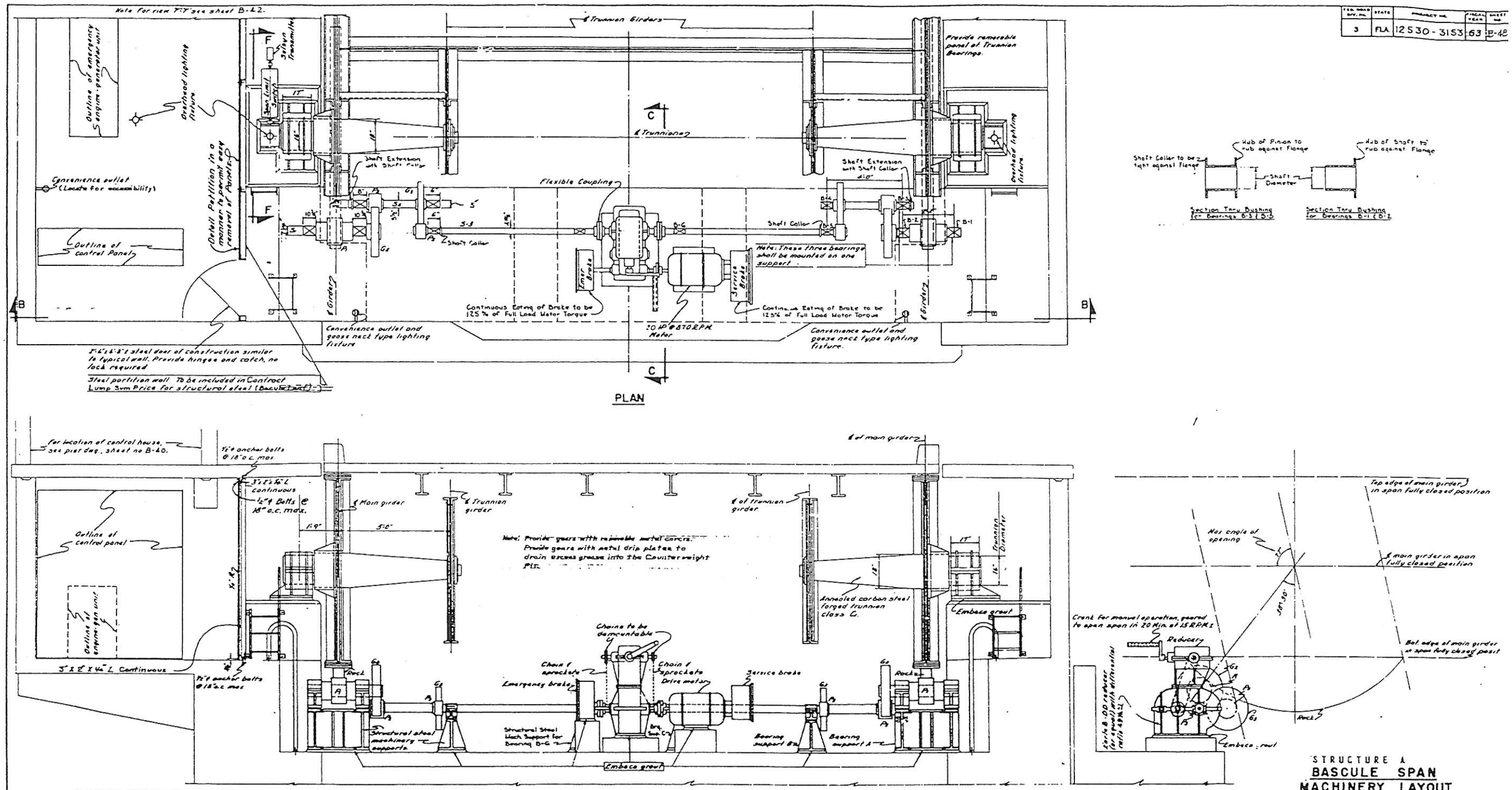

TABLE OF GEARS										
MARK	NO. REQ.	PITCH	NO. OF TEETH	PITCH DIAM.	FACE	MIN. HUB	BORE	KEY	MAT'L.	TEETH
Rock	2	3½" C.P.	—	16.8"	7¼"	—	—	—	C.S.	20° Inv.
P-1	2	3½" C.P.	14	15.597"	10½"	Intergral with S-1			F.S.	20° Inv.
G-2	2	1¼" D.P.	41	32.80"	5½"	9½"	7¼"	2-1¾"x1¾"	C.S.	20° Inv.
P-2	2	1¼" D.P.	15	12.0"		8¼"	5½"	1-1⅝"x1⅝"	F.S.	20° Inv.
G-3	2	1¼" D.P.	46	26.286"	4"	8¼"	3½"	2-1⅝"x1⅝"	C.S.	20° Inv.
P-3	2	1¼" D.P.	15	3.571"	5"	7"	4⅝"	1-1"x1"	F.S.	20° Inv.

-NOTES-

BUSHINGS: Bushings for lower half of trunnion bearings shall be Alloy "B" Bronze. Bushings for shafts S_1, S_2, & S_3 shall be Alloy "C" Bronze. All other bearings shall be of babbit.

MACHINERY LAYOUT: This drawing is intended as a general machinery layout only and does not show all details, see Article 330.4 of Standard Specifications for Road and Bridge Construction.

MACHINERY SUPPORTS: Machinery supports shall be structural steel and the cost shall be included in the Contract Lump Sum Price for structural steel. (Bascule Leaf)

LEAF POSITION INDICATORS: Synchronous leaf position indicators shall be provided (Switching Diagram).

SPECIFICATIONS: AASHO Standard Specifications for Movable Highway Bridges.

RACK: All teeth shall be Cut.

STRUCTURE A
BASCULE SPAN
MACHINERY LAYOUT

STATE ROAD DEPARTMENT OF FLORIDA
BRIDGE DIVISION

BRIDGES BETWEEN ESTERO ISLAND AND BONITA BEACH

REVISIONS		ROAD NO.	COUNTY	PROJECT NO.
Dates	Descriptions	S-865	LEE	12530-3153
6-24	Rock tooth note			

	Names	Dates	APPROVED BY
Detailed by	G.C.L.	11-57	
Checked by	L.H.L.	11-57	
Quantities by			
Checked by			
Traced by	G.C.L.	11-57	Drawing No. 47 of 60 / Index No. 7700

BX1-96

BX1-97
BX1-97

EB-9B

FED. ROAD DIST. NO.	STATE	PROJECT NO.	FISCAL YEAR	SHEET NO.
3	FLA.	12530-3153	63	B-50

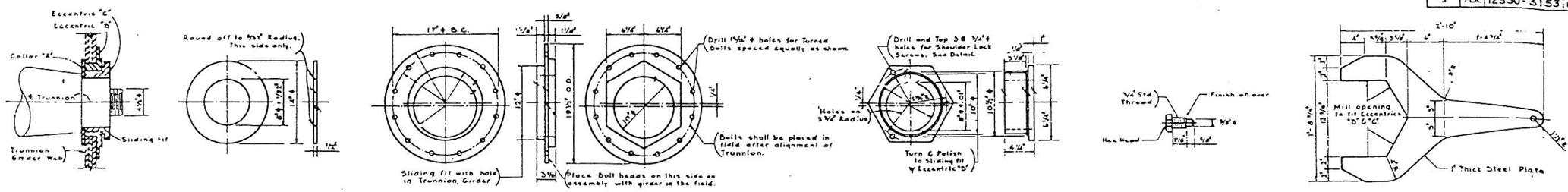

DETAILS OF ECCENTRICS

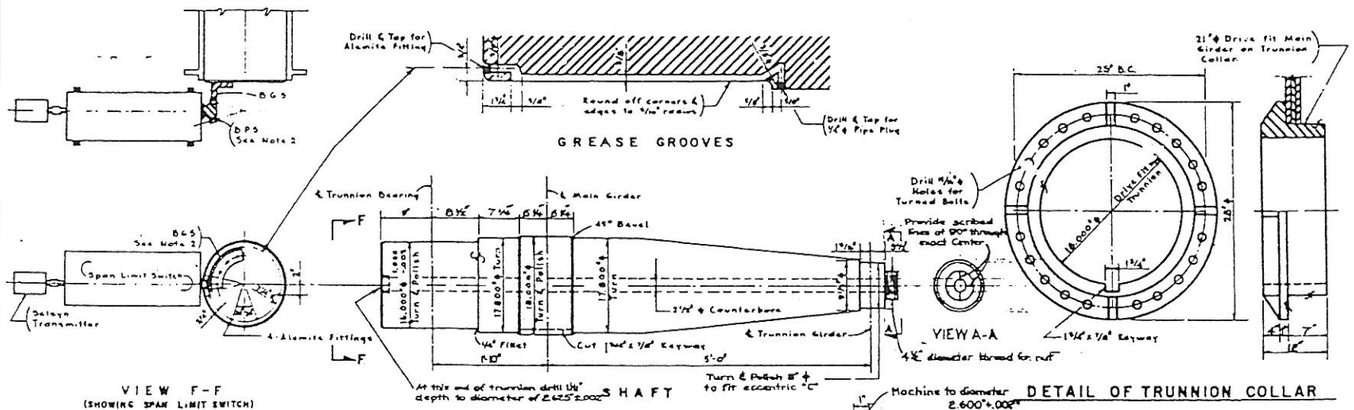

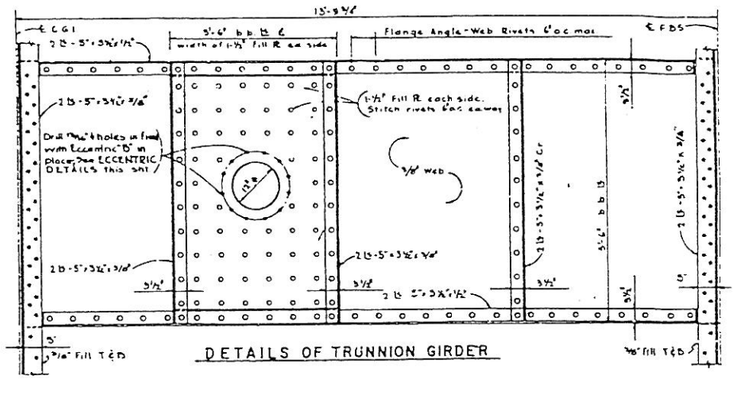

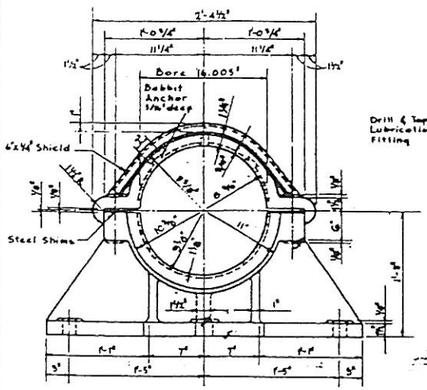

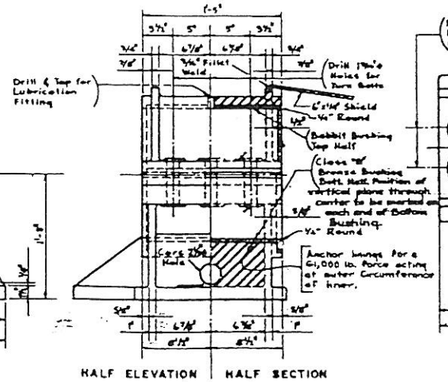

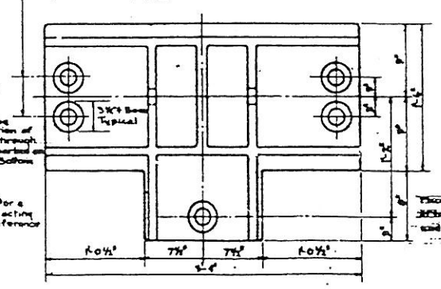

DETAILS OF TRUNNION BEARING

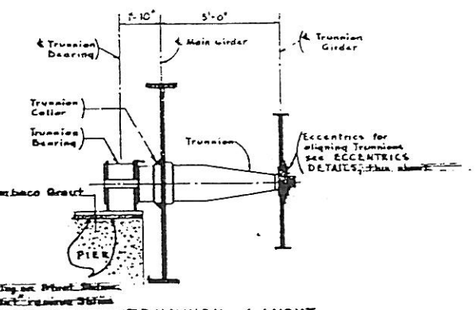

NOTES

1. Eccentrics and Collar "A" shall be made of Structural Steel Stock, Trunnion Shaft shall be Annealed Carbon Steel, forged, Class C1; Trunnion Bearing and Trunnion Collar shall be Cast Steel.
2. BP-5 17 Teeth, 5DP, 3.2" Pitch Diameter, Pinion.
   BG-5 71 Teeth (In Full Circle), 5DP, 14.2" Pitch Diameter Rack.
3. For General Notes, see Sheet B-1.
4. Steel in Trunnion Girder shall be included in the Contract Lump Sum Price under Item No. 320-2 Structural Steel (Bascule Leaf). All other metal shall be included in Contract Lump Sum Price under Item No. 320 Machinery and Castings.

STRUCTURE A

BASCULE SPAN
TRUNNION AND RELATED DETAILS

STATE ROAD DEPARTMENT OF FLORIDA
BRIDGE DIVISION

BRIDGES BETWEEN ESTERO ISLAND AND BONITA BEACH

REVISIONS		ROAD No.	COUNTY	PROJECT NO.
Letter	Description	S-865	LEE	12530-3153

	Name	Date
Detailed by	J.E.S.	8-67
Checked by	L.H.S	8-67
Quantities by	T.M.C	8-68
Checked by	J.E.S.	8-68
Traced by	J.E.S.	8-67

APPROVED BY

Chief Bridge Engineer

Drawing No. 49 of 60 | Index No. 7700

BX1-97
BX1-97

BX1-98
BX1-98

EB-10B

FED. PROJ. NO.	STATE	PROJECT NO.	FISCAL YEAR	SHEET NO.
3	FLA	12530-3153	63	B-51

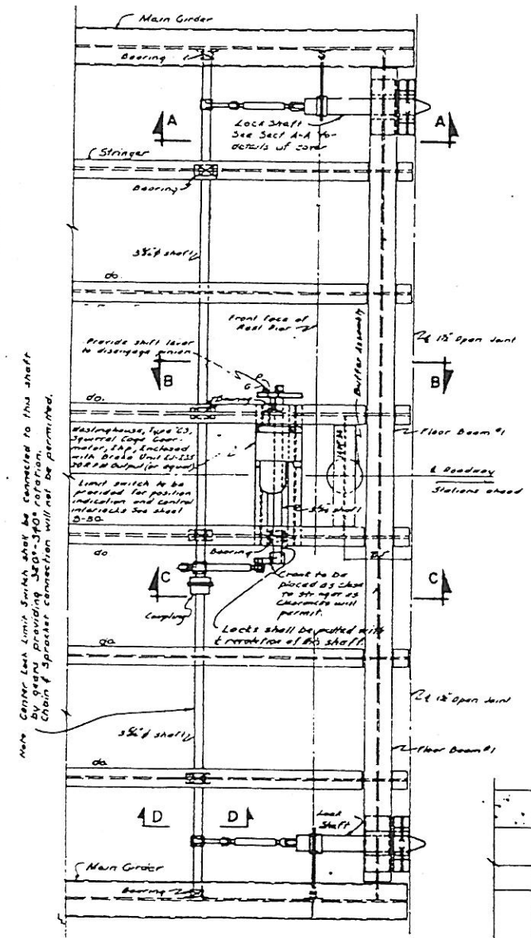

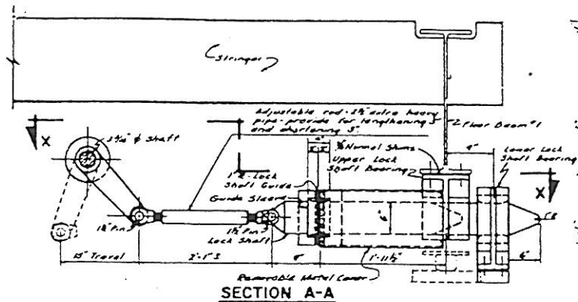

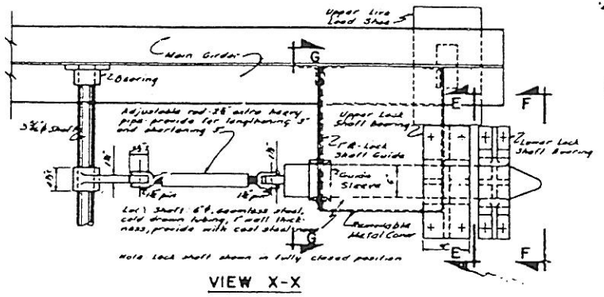

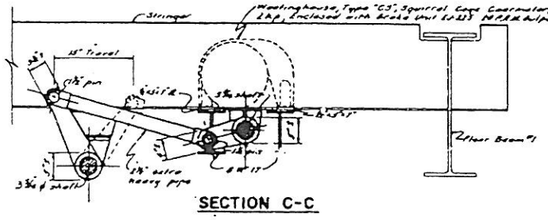

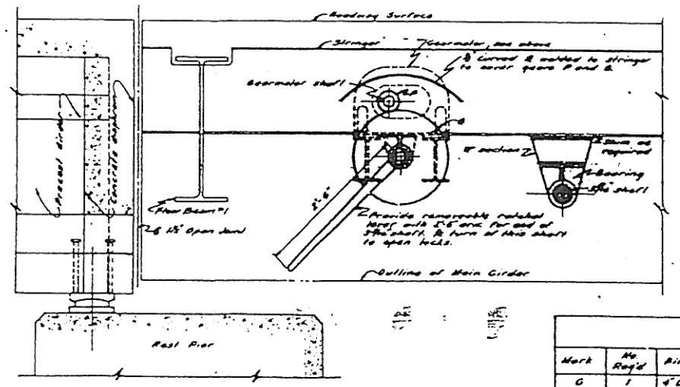

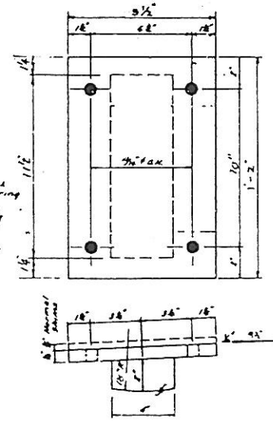

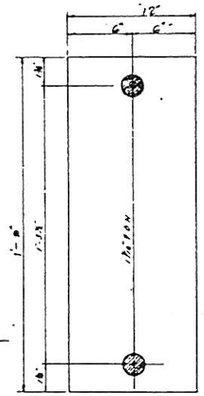

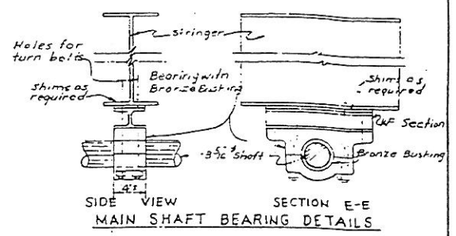

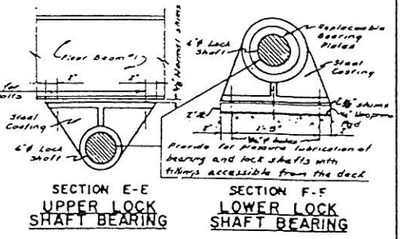

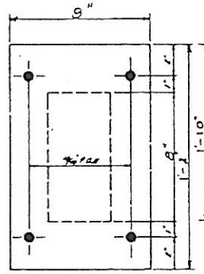

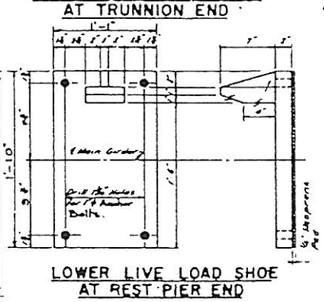

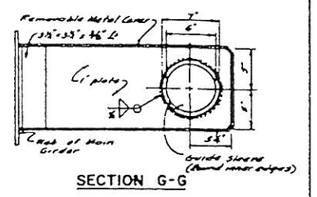

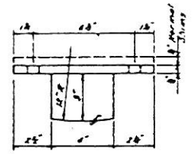

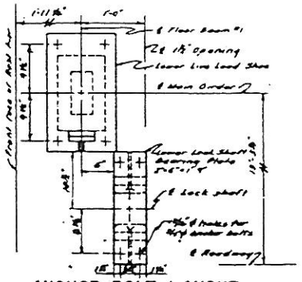

NOTES
1. For General Notes, see sheet B-1.
2. Provisions shall be made for lubricating, from the Bridge Deck, all moving parts of the rest mechanism. Lubricating fittings for these parts shall be placed on the upper sides of pedestals furnished to the parts and to the lower ends of the Sidewalk Floor Beam of Curb.
3. Live Load Shoes and Lower Lock Shaft Bearing Masonry Plate shall be fabricated from Structural Steel.
4. Cover ends of lubricating pipes with a hinged ¼" plate flush with top of Sidewalk.

STRUCTURE A
LOCK ASSEMBLY AND LIVE LOAD SHOES

TABLE OF GEARS

Mark	No Req'd	Pitch	No. of Teeth	Pitch Diam.	Face	Hub	Bore	Key	Shaft	Teeth
G	1	4 D.P.	73	18.250"	2½"	2¾"	3¼"ϕ	¾"x⅜"	S.S.	20° Involute
P	1	4 D.P.	14	3.500"	2½"	2¾"	1½"	⅜"x¾"	S.S.	20° Involute

REVISIONS			
Date	Description		

STATE ROAD DEPARTMENT OF FLORIDA
BRIDGE DIVISION

BRIDGES BETWEEN ESTERO ISLAND AND BONITA BEACH

ROAD NO.	COUNTY	PROJECT NO.
S-865	LEE	12530-3153

	Designed	Date
Detailed by	G.L.L.	10-67
Checked by	L.M.	11-67
Quantities by		
Checked by		
Traced by	G.L.L.	10-67

APPROVED BY: T.W. Jennings, Engineer of Bridges
Sheet No. 50 of 60 | Index No. 7700

BX1-98
BX1-98

BX1-99
BX1-99

EB-11B

FED. ROAD DIST. NO.	STATE	PROJECT NO.	FISCAL YEAR	SHEET NO.
3	FLA.	12530-3153	63	B-5

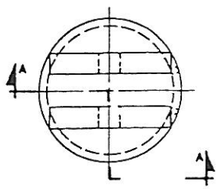

TOP VIEW

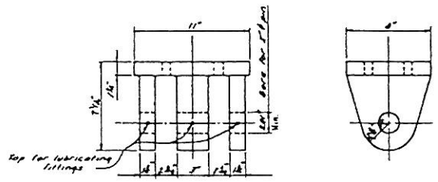

SUPPORT BRACKET

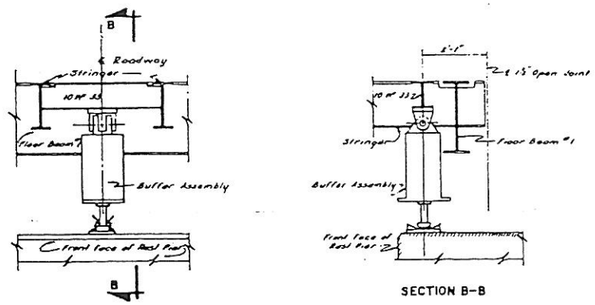

LOCATION OF BUFFERS

SECTION B-B

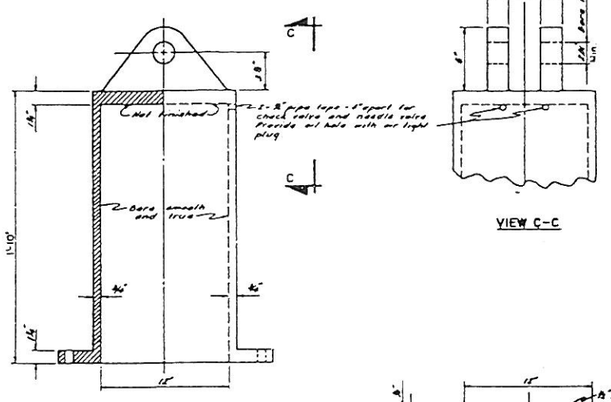

SECTION A-A

VIEW C-C

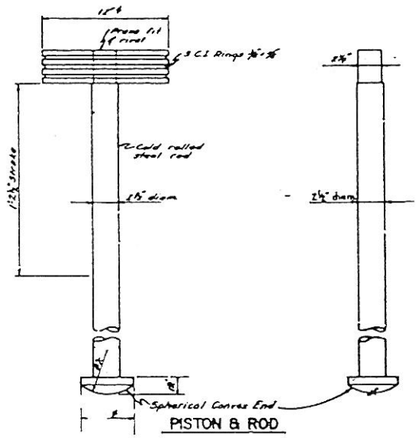

PISTON & ROD

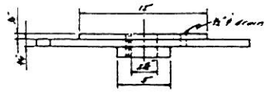

FRONT ELEVATION

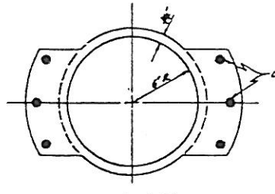

BOTTOM VIEW

BUFFER CYLINDER
(C.S. OR C.I. (MEEHANITE METAL))

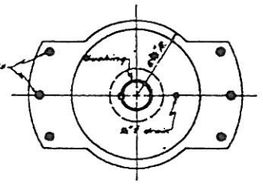

PLAN

CYLINDER HEAD
(C.S. OR S.S.)

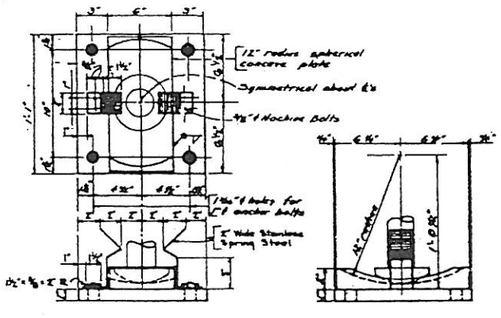

BUFFER PLATES

STRUCTURE A
BUFFER DETAILS

STATE ROAD DEPARTMENT OF FLORIDA
BRIDGE DIVISION

BRIDGES BETWEEN ESTERO ISLAND AND BONITA BEACH

REVISIONS Date	Description	ROAD NO.	COUNTY		PROJECT NO.
		S-865	LEE		12530-3153
			District	State	APPROVED BY
		Checked by	G.C.L.	11-67	
		Checked by	L.H.	11-67	
		Quantities by			
		Checked by			Drawing No. 31 of 60
		Traced by	G.C.L.	11-67	Index No. 7700

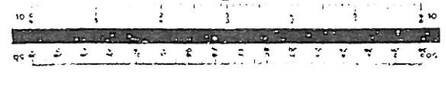

BX1-99
BX1-99

BX1-100
BX1-100

EB-12B

FED. ROAD DIST. NO.	STATE	PROJECT NO.	FISCAL YEAR	SHEET NO.
3	FLA.	12530-3153	'63	28-56

Note: Circuit shown for 3 wire service. For 4 wire service omit transformer (T-26) and use single pole breakers in panel (T-26).

NOTE
Bond all Cabinets and Frames to the system ground with #4 bare conductors.

KEY

NO.	QUAN.	DESCRIPTION	LOCATION
1	1	Bascule pier electronic unit	C.H.
2	1	Watt hour meter	C.H.
3	1	Traffic light	C.H.
4	1	Traffic light bracket	C.H.
5	1	2" dia. flexible conduit with wires and watertight connectors from bascule pier electronic unit to watt hour meter	C.H.
6	1	2" dia. conduit (Electrical service)	C.H.
7	1	2" dia. conduit (Electrical service)	C.H.
8	1	2" dia. conduit (Electrical service)	C.H.

BX1-101
BX1-101

EB-11C

FED. ROAD DIST. NO.	STATE	PROJECT NO.	SHEET NO.
3	FLA.		

Note: Circuit shown for 3 wire service. For 4 wire service omit transformer (T2) and use single pole breakers in panel (P-26).

NOTE
Bond all Cabinets and Frames to the system ground with #4 bare conductors.

KEY

No.	Unit	Description	Location
1	1	Control Cabinet	C.R.
2	1	Bridge Cabinet	C.R.
3	1	Motor Cabinet	C.R.
4	1	Motor Disconnect Switch	C.R.
5	1	Motor Disconnect Switch	C.R.
6	1	Control Transformer	C.R.
7	1	Ammeter	C.R.
8	1	Ammeter Switch	C.R.
9	1	Voltmeter Switch	C.R.
10	1	Voltmeter Transformer	C.R.
11	1	Time Delay Circuit Breaker	C.R.
12	1	Time Delay Circuit Breaker	C.R.
13	1	Receptacle Polarized for Interlock	C.R.
14	1	Receptacle Polarized for Interlock	C.R.
15	1	7 Pole Receptacle	C.R.
16	1	Warning Siren (Electrically and Mechanically Operated)	C.R.
17	1	Warning Siren (Electrically Operated)	C.R.
18	1	Control Relay	C.R.
19	1	Time Switch	C.R.
20	1	Main Motor Control Contactor	C.R.
21	1	Main Motor Control Contactor	C.R.
22	1	Auxiliary Control Contactor	C.R.
23	1	Auxiliary Control Contactor	C.R.
24	1	Motor Overload Relay	C.R.
25	1	Motor Overload Relay	C.R.
26	1	Auxiliary Control Contactor	C.R.
27	1	Auxiliary Control Contactor	C.R.
28	1	Control Transformer	C.R.
29	1	Control Transformer	C.R.
30	1	Time Delay Relay	C.R.
31	1	Time Delay Relay	C.R.
32	1	Time Delay Relay	C.R.
33	1	Time Delay Relay	C.R.
34	1	Time Delay Relay	C.R.
35	1	Time Delay Relay	C.R.
36	1	Time Delay Relay	C.R.
37	1	Time Delay Relay	C.R.
38	1	Time Delay Relay	C.R.
39	1	Time Delay Relay	C.R.
40	1	Time Delay Relay	C.R.
41	1	Time Delay Relay	C.R.
42	1	Time Delay Relay	C.R.
43	1	Time Delay Relay	C.R.
44	1	Time Delay Relay	C.R.
45	1	Time Delay Relay	C.R.
46	1	Time Delay Relay	C.R.
47	1	Time Delay Relay	C.R.
48	1	Time Delay Relay	C.R.
49	1	Time Delay Relay	C.R.
50	1	Time Delay Relay	C.R.
51	1	Time Delay Relay	C.R.
52	1	Time Delay Relay	C.R.
53	1	Time Delay Relay	C.R.
54	1	Time Delay Relay	C.R.
55	1	Time Delay Relay	C.R.
56	1	Time Delay Relay	C.R.
57	1	Time Delay Relay	C.R.
58	1	Time Delay Relay	C.R.
59	1	Time Delay Relay	C.R.
60	1	Time Delay Relay	C.R.
61	1	Time Delay Relay	C.R.
62	1	Time Delay Relay	C.R.
63	1	Time Delay Relay	C.R.
64	1	Time Delay Relay	C.R.
65	1	Time Delay Relay	C.R.
66	1	Time Delay Relay	C.R.
67	1	Time Delay Relay	C.R.
68	1	Time Delay Relay	C.R.
69	1	Time Delay Relay	C.R.
70	1	Time Delay Relay	C.R.
71	1	Time Delay Relay	C.R.
72	1	Time Delay Relay	C.R.
73	1	Time Delay Relay	C.R.
74	1	Time Delay Relay	C.R.
75	1	Time Delay Relay	C.R.
76	1	Time Delay Relay	C.R.
77	1	Time Delay Relay	C.R.
78	1	Time Delay Relay	C.R.
79	1	Time Delay Relay	C.R.
80	1	Time Delay Relay	C.R.
81	1	Time Delay Relay	C.R.
82	1	Time Delay Relay	C.R.
83	1	Time Delay Relay	C.R.
84	1	Time Delay Relay	C.R.
85	1	Time Delay Relay	C.R.
86	1	Time Delay Relay	C.R.
87	1	Time Delay Relay	C.R.
88	1	Time Delay Relay	C.R.
89	1	Time Delay Relay	C.R.
90	1	Time Delay Relay	C.R.
91	1	Time Delay Relay	C.R.
92	1	Time Delay Relay	C.R.
93	1	Time Delay Relay	C.R.
94	1	Time Delay Relay	C.R.
95	1	Time Delay Relay	C.R.
96	1	Time Delay Relay	C.R.
97	1	Time Delay Relay	C.R.
98	1	Time Delay Relay	C.R.
99	1	Time Delay Relay	C.R.
100	1	Time Delay Relay	C.R.
101	1	Time Delay Relay	C.R.
102	1	Time Delay Relay	C.R.
103	1	Time Delay Relay	C.R.
104	1	Time Delay Relay	C.R.
105	1	Time Delay Relay	C.R.
106	1	Time Delay Relay	C.R.
107	1	Time Delay Relay	C.R.
108	1	Time Delay Relay	C.R.
109	1	Time Delay Relay	C.R.
110	1	Time Delay Relay	C.R.
111	1	Time Delay Relay	C.R.
112	1	Time Delay Relay	C.R.
113	1	Time Delay Relay	C.R.
114	1	Time Delay Relay	C.R.
115	1	Time Delay Relay	C.R.
116	1	Time Delay Relay	C.R.
117	1	Time Delay Relay	C.R.
118	1	Time Delay Relay	C.R.
119	1	Time Delay Relay	C.R.
120	1	Time Delay Relay	C.R.
121	1	Time Delay Relay	C.R.
122	1	Time Delay Relay	C.R.
123	1	Time Delay Relay	C.R.
124	1	Time Delay Relay	C.R.
125	1	Time Delay Relay	C.R.
126	1	Time Delay Relay	C.R.
127	1	Time Delay Relay	C.R.
128	1	Time Delay Relay	C.R.
129	1	Time Delay Relay	C.R.
130	1	Time Delay Relay	C.R.
131	1	Time Delay Relay	C.R.
132	1	Time Delay Relay	C.R.
133	1	Time Delay Relay	C.R.
134	1	Time Delay Relay	C.R.
135	1	Time Delay Relay	C.R.
136	1	Time Delay Relay	C.R.
137	1	Time Delay Relay	C.R.
138	1	Time Delay Relay	C.R.
139	1	Time Delay Relay	C.R.
140	1	Time Delay Relay	C.R.
141	1	Time Delay Relay	C.R.
142	1	Time Delay Relay	C.R.
143	1	Time Delay Relay	C.R.
144	1	Time Delay Relay	C.R.
145	1	Time Delay Relay	C.R.
146	1	Time Delay Relay	C.R.
147	1	Time Delay Relay	C.R.
148	1	Time Delay Relay	C.R.
149	1	Time Delay Relay	C.R.
150	1	Time Delay Relay	C.R.
151	1	Time Delay Relay	C.R.
152	1	Time Delay Relay	C.R.
153	1	Time Delay Relay	C.R.
154	1	Time Delay Relay	C.R.
155	1	Time Delay Relay	C.R.
156	1	Time Delay Relay	C.R.
157	1	Time Delay Relay	C.R.
158	1	Time Delay Relay	C.R.
159	1	Time Delay Relay	C.R.
160	1	Time Delay Relay	C.R.
161	1	Time Delay Relay	C.R.
162	1	Time Delay Relay	C.R.
163	1	Time Delay Relay	C.R.
164	1	Time Delay Relay	C.R.
165	1	Time Delay Relay	C.R.
166	1	Time Delay Relay	C.R.
167	1	Time Delay Relay	C.R.
168	1	Time Delay Relay	C.R.
169	1	Time Delay Relay	C.R.
170	1	Time Delay Relay	C.R.
171	1	Time Delay Relay	C.R.
172	1	Time Delay Relay	C.R.
173	1	Time Delay Relay	C.R.
174	1	Time Delay Relay	C.R.
175	1	Time Delay Relay	C.R.
176	1	Time Delay Relay	C.R.
177	1	Time Delay Relay	C.R.
178	1	Time Delay Relay	C.R.
179	1	Time Delay Relay	C.R.
180	1	Time Delay Relay	C.R.
181	1	Time Delay Relay	C.R.
182	1	Time Delay Relay	C.R.
183	1	Time Delay Relay	C.R.
184	1	Time Delay Relay	C.R.
185	1	Time Delay Relay	C.R.
186	1	Time Delay Relay	C.R.
187	1	Time Delay Relay	C.R.
188	1	Time Delay Relay	C.R.
189	1	Time Delay Relay	C.R.
190	1	Time Delay Relay	C.R.
191	1	Time Delay Relay	C.R.
192	1	Time Delay Relay	C.R.
193	1	Time Delay Relay	C.R.
194	1	Time Delay Relay	C.R.
195	1	Time Delay Relay	C.R.
196	1	Time Delay Relay	C.R.
197	1	Time Delay Relay	C.R.
198	1	Time Delay Relay	C.R.

LIMIT SWITCH SCHEDULE

#44 Span fully closed Limit Switch
Span fully closed — — — (2)
Span not fully closed — — — (2)

#45 Span Limit Switch
Span fully closed
" " open
" " open
" " fully

#46 Lock Limit Switch
Locks pulled
Locks driven

#47 Gate Limit Switch
Gate raised
Gate lowered

SIZE OF UNITS

JOB NO.	GENERATOR	MAIN LOCK MOTOR	MOTOR A
12060-3509	40 KW 50 Kw, AM	20 HP	2 HP

SINGLE LEAF BASCULE
STATE ROAD DEPARTMENT OF FLORIDA
BRIDGE DIVISION
ELEMENTARY WIRING DIAGRAM

REVISIONS Date	Description	ROAD NO.	COUNTY	PROJECT NO.
6/61	Add Lockmotor. Add Control etc. for Aux. Gate.	SR 78	LEE	12060-3509

	Name	Date	APPROVED BY
Detailed by	C.H.U.	5-56	
Checked by			
Quantities by			
Checked by			
Traced by	C.E.S.	5-56	Drawing No. 1 OF 1

BX1-101
BX1-101

BX1-102

EB-12C

FED. ROAD DIST. NO.	STATE	PROJECT NO.	FINAL PLANS
3	FLA.		

5 Turns 1" Pitch, 1"; 16 Turns ~ 3" Pitch; 9" Pitch; No. 5 Gage Spiral Ties; 16 Turns ~ 3" Pitch; 5 Turns 1" Pitch, 1"

PRESTRESSED PILE 18"□
Single Point Pick-Up Maximum Length 70 Ft.
Double Point Pick-Up Maximum Length 95 Ft.

SECTION A-A
1'-6"; 2½" Clear; 2½" Clear; 1'-6"
16-7/16" ø S.R. Cables @ 18,900 lbs. each.

5 Turns 1" Pitch, 1"; 16 Turns ~ 3" Pitch; 9" Pitch; No. 5 Gage Spiral Ties; 16 Turns ~ 3" Pitch; 5 Turns 1" Pitch, 1"

PRESTRESSED PILE 20"□
Single Point Pick-Up Maximum Length 80 Ft.
Double Point Pick-Up Maximum Length 110 Ft.

SECTION D-D
1'-8"; 2½" Clear; 1'-8"
20-7/16" ø S.R. Cables @ 18,900 lbs. each.

Build-Up; 2'-6" Lap; No. 5 Gage Wire 6" Pitch; No. 5 Bars; 12"; 1"
Provide 6 - No. 10 Dowels 3'-0" long.

BUILD-UP

NOTE: If additional driving is required, 2" pitch shall be used for spiral ties within these limits.

No. 5 Gage Spiral Ties; 1'-6"; 2½" Cl.; 1'-6"; No. 5 Bars

SECTION B-B

1'-6"; 1'-6"

SECTION C-C

Provide 6-No. 10 Dowels 3'-0" Long.

Build-Up; 2'-6" Lap; No. 5 Gage Wire 6" Pitch; 12"; 1"

BUILD-UP

NOTE: If additional driving is required, 2" pitch shall be used for spiral ties within these limits.

1'-8"; 2½" Clear; 20 No. 6 Bars; 2 No. 5 Gage Spiral Ties.

SECTION E-E

1'-8"; 1'-6"

SECTIO F-F

This portion of hole shall be filled with concrete if Build-Up is required.

1" 20 Turns ~ 3" Pitch 9" Pitch; No. 5 Gage Spiral Ties; 10WF 89; 6'-0"

VIEW L-L

4-No. 8; 2'-0"; 2½" Clear; 2½" Clear

6'-0"; Build-Up; 2'-6" Lap; No. 5 Gage Spiral Ties 3" Pitch

4-No. 8; 2'-0"; 2½" Clear; 2½" Clear; No. 5 Gage

2'-0"; 2½" Clear; 2½" Clear; No. 5 Gage Spiral Tie.; 24-7/16" ø S.R. Strands @ 18,900 lbs. each.

SECTION K-K

1" 20 Turns @ 3"; 9" Pitch; 16 Turns ~ 3" Pitch; 3"; No. 5 Gage Spiral Ties; Tip; Head; End of 12" diameter hole; No. 10 Bars 6'-0" long (See Section J-J).

PRESTRESSED PILE - 24"□

2½" Cl.; 2½" Cl.; 2'-0"; 24-7/16" ø S.R. Cables @ 18,900 lbs. each.

SECTION G-G

5"; 2½" Clear; No. 5 Gage Wire 12" O.C.; 4 No. 10 Bars 6'-0" long; 2½" Cl.; 2'-0"; 24-7/16" ø S.R. Cables @ 18,900 lbs. each.; No. 5 Gage Spiral Ties

SECTION J-J

D; 1" Rad.

TYPICAL PILE SHAPE FOR 'MOLD' FORMS

L; Pick-Up Point; 0.7 L; 0.3 L

SINGLE POINT PICK-UP

L; Pick-Up Points; 0.21 L; 0.58 L; 0.21 L

DOUBLE POINT PICK-UP

NOTE: Piles shall be marked at Pick-up Points to indicate proper points for attaching handling lines.

Precast Extension either Reinforced, Prestressed, or Reinforced cast-in-place Section.; 6-No. 10 Dowels 3'-0" long.; Full Epoxy Mortar Joint.; From to retain Mortar.; Gasket; Epoxy Mortar to fill hole with Dowel in place.; Drilled Holes 2" Diameter.

BEFORE BONDING; AFTER BONDING

TYPICAL BONDING DETAILS FOR 18" & 20" PILES

NOTE: Spliced Piles may be driven after Splice is two days old.

2½" Clear; 6-No. 10 Dowels 3'-0" long.; No. 5 Gage Spiral Ties.; No. 5 Bars for 18" No. 6 Bars for 20".

18"□ & 20"□ PILE

ALTERNATE EPOXY BONDED SPLICE

GENERAL NOTES

CONCRETE STRENGTH: For Class P Concrete the Cylinder Strength shall be 5,000 p.s.i. minimum at 28 days and 4,000 p.s.i. minimum at transfer of the Prestressing Force.

SPIRAL TIES: Each wrap of spiral shall be tied to at least two Corner Cables.

MATERIAL FOR SPIRAL TIES: Spirals may be manufactured from stock meeting requirements of any grade of reinforcing steel or hard drawn steel.

PILE CUTOFFS: In cutting off Concrete Piles an abrasive saw shall be used to score the Concrete at Cut off elevation to the approximate depth of Reinforcing Steel. As an alternate to sawing, scoring may be done with a templated power drill.

DRIVING: 20" Piles shall be driven with a Power hammer developing energy per blow of not less than 24,000 ft. lbs. 24" Piles shall be driven with a Power Hammer developing energy per blow of not less than 30,000 ft. lbs.

OCTAGONAL PILES: Prestressed octagonal piles of equivalent strength maybe substituted for square piles. Details of pile shall be submitted to the Engineer for approval.

STATE ROAD DEPARTMENT OF FLORIDA
STRUCTURES DIVISION

18"□ 20"□ & 24"□ PRESTRESSED CONCRETE PILE

REVISIONS		ROAD NO.	COUNTY		PROJECT NO.
Dates	Descriptions	-			
			Names	Dates	APPROVED BY
		Detailed by	C.T.F.	1-62	
		Checked by	E.C.F.	2-62	
		Quantities by			Assistant State Highway Eng.
		Checked by			Drawing No. / Sheet No.
		Traced by	M.H.W.	3-66	1 of 1 / 9495

BX1-102
BX1-102

BX1-103

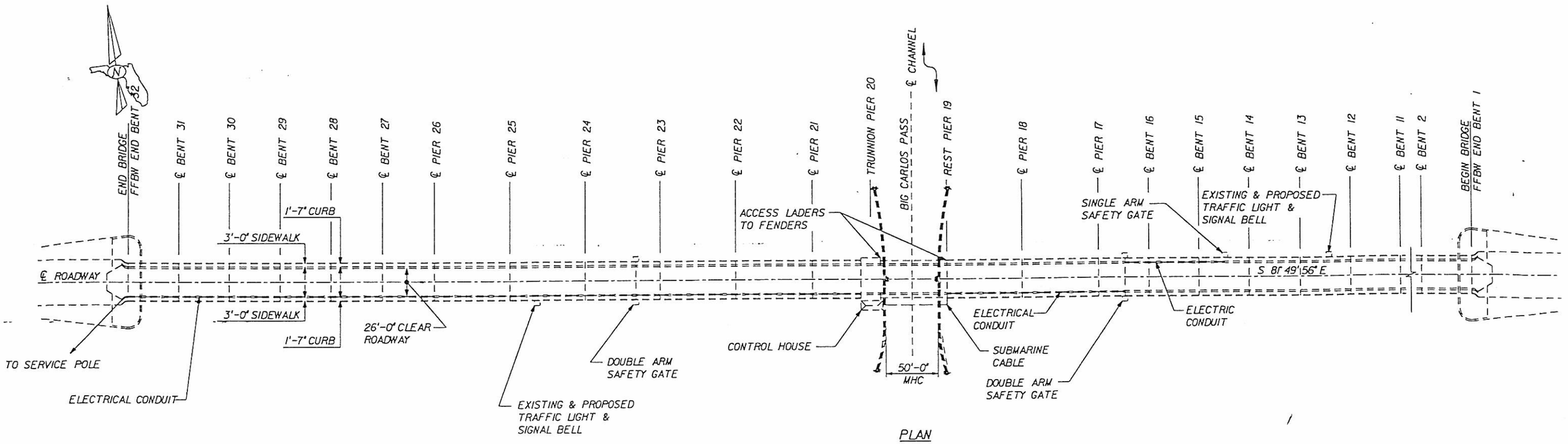

PLAN

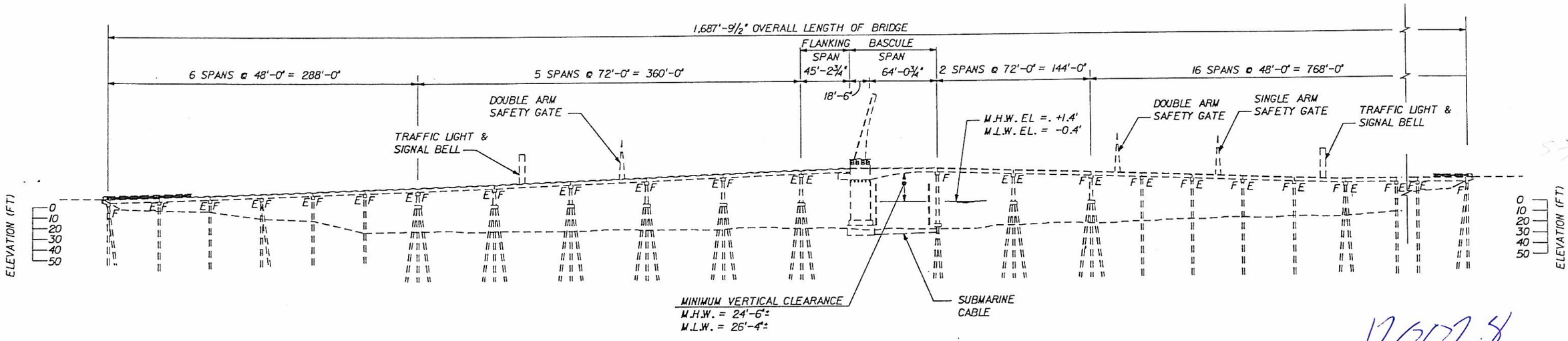

ELEVATION

120028

SCALE: 1/8 REVISION: 0 2/18/00 PEC

19805.03 BIGCPLEL

REVISIONS					
Date	By	Description	Date	By	Description

	Names	Dates
Drawn by	PEC	9/99
Checked by	LFS	9/99
Designed by	———	———
Checked by	———	———
Approved by	[illegible]	02/18/00

ENGINEER OF RECORD:
Kisinger Campo and Associates Corp.
2203 N. LOIS AVE.
SUITE 1200
TAMPA, FLORIDA 33607

LOGO:

LEE COUNTY

DEPARTMENT OF TRANSPORTATION

SHEET TITLE: PLAN AND ELEVATION BIG CARLOS DRAW BRIDGE (No. 120028)

PROJECT NAME: ALVA, BIG CARLOS & MATLACHA BASCULE BRIDGE REPAIR

Drawing N

Index No

BX1-103

BX1-104

BX1-104

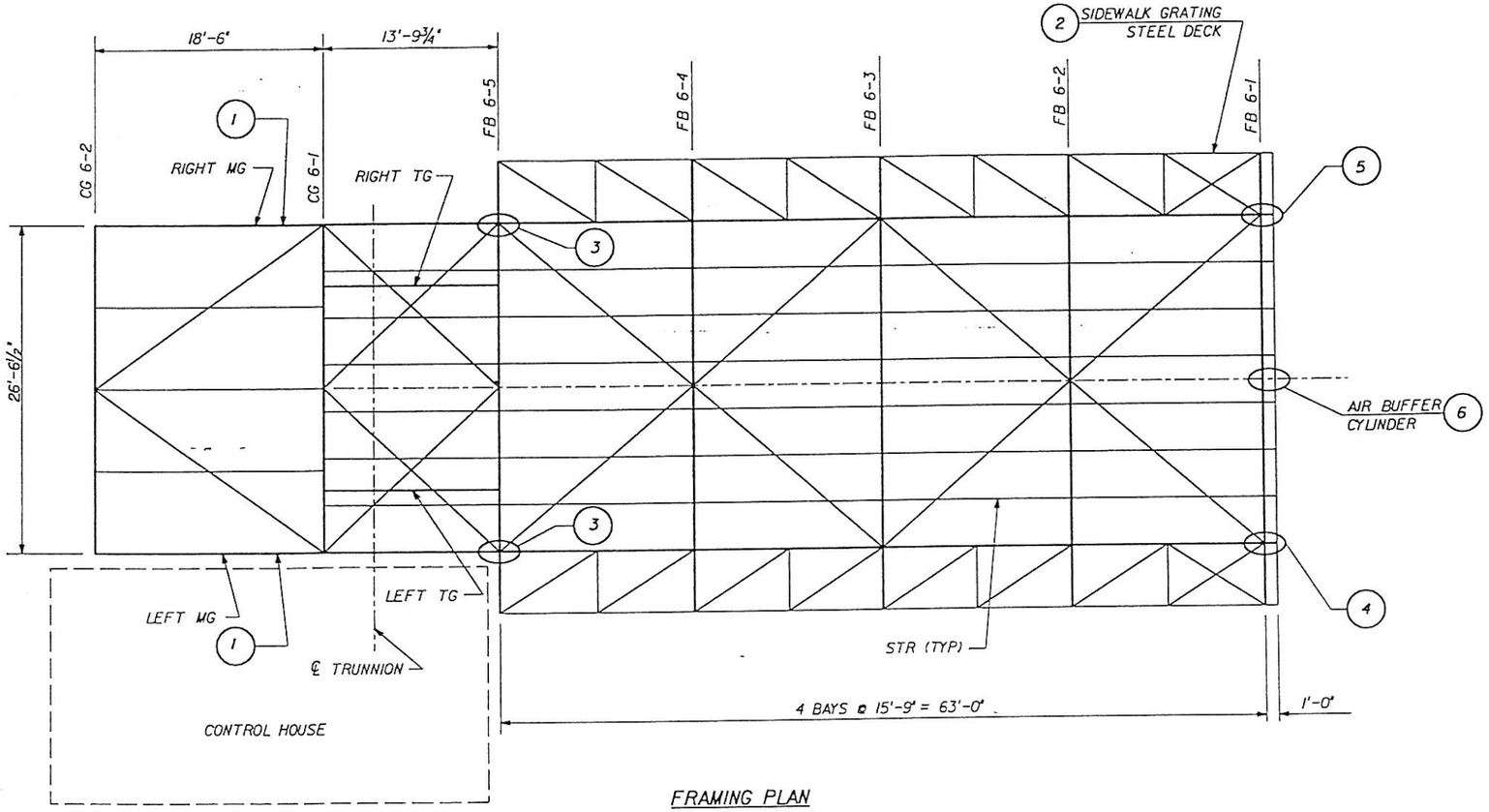

FRAMING PLAN

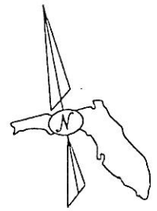

WORK IDENTIFICATION:

1. REPLACE MISSING OR CORRODED RIVETS/BOLTS WITH BOLTS ON BOTH MAIN GIRDERS. REFER TO SHEET B-21 FOR REPAIR DETAILS.
2. REPLACE STEEL FLOOR GRATING IN DECK SIDEWALK. REFER TO SHEET B-22 FOR REPAIR DETAILS.
3. RECONDITION LEFT AND RIGHT TRUNNION PIER UPPER LIVE LOAD SHOE AND BEARING STRIKE PLATE ASSEMBLIES. REFER TO SHEET M-1 FOR DETAILS.
4. RECONDITION LEFT REST PIER UPPER LIVE LOAD SHOE AND BEARING STRIKE PLATE ASSEMBLY. REFER TO SHEET M-1 FOR DETAILS.
5. REPLACE RIGHT REST PIER UPPER LIVE LOAD SHOE AND BEARING STRIKE PLATE ASSEMBLY. REFER TO SHEET M-1 & 2 FOR DETAILS.
6. REMOVE, RECONDITION AND REINSTALL AIR BUFFER CYLINDER. REFER TO SHEET M-1 FOR DETAILS.

LEGEND:

MG - MAIN GIRDER
FB - FLOOR BEAM
TG - TRUNNION GIRDER
CG - COUNTERWEIGHT GIRDER
STR - STRINGER

LESPAN.DGN SCALE: 1/2 REVISION: 0 02/18/00 LFS

19805.03 WORKIOB.

REVISIONS					
Date	By	Description	Date	By	Description

	Names	Dates
Drawn by	DEC	11/99
Checked by	LFS	11/99
Designed by	——	——
Checked by	——	——
Approved by	[signature]	02/18/00

ENGINEER OF RECORD:
Kisinger Campo and Associates Corp.
2203 N. LOIS AVE.
SUITE 1200
TAMPA, FLORIDA 33607

LOGO: KCA

Lee COUNTY

DEPARTMENT OF TRANSPORTATION

SHEET TITLE: BIG CARLOS BASCULE SPAN WORK IDENTIFICATION

PROJECT NAME: ALVA, BIG CARLOS & MATLACHA BASCULE BRIDGE REPAIR

Drawing

Index

BX1-104

BX1-104

BX1-105

BX1-105

WORK IDENTIFICATION:

INSTALL CATHODIC PROTECTION ON EXPOSED STEEL PILE TIPS AND REPAIR CONCRETE SPALLS ON EXISTING PILE JACKETS ON THE BIG CARLOS DRAW BRIDGE PILING AS DETAILED ON THIS SHEET.

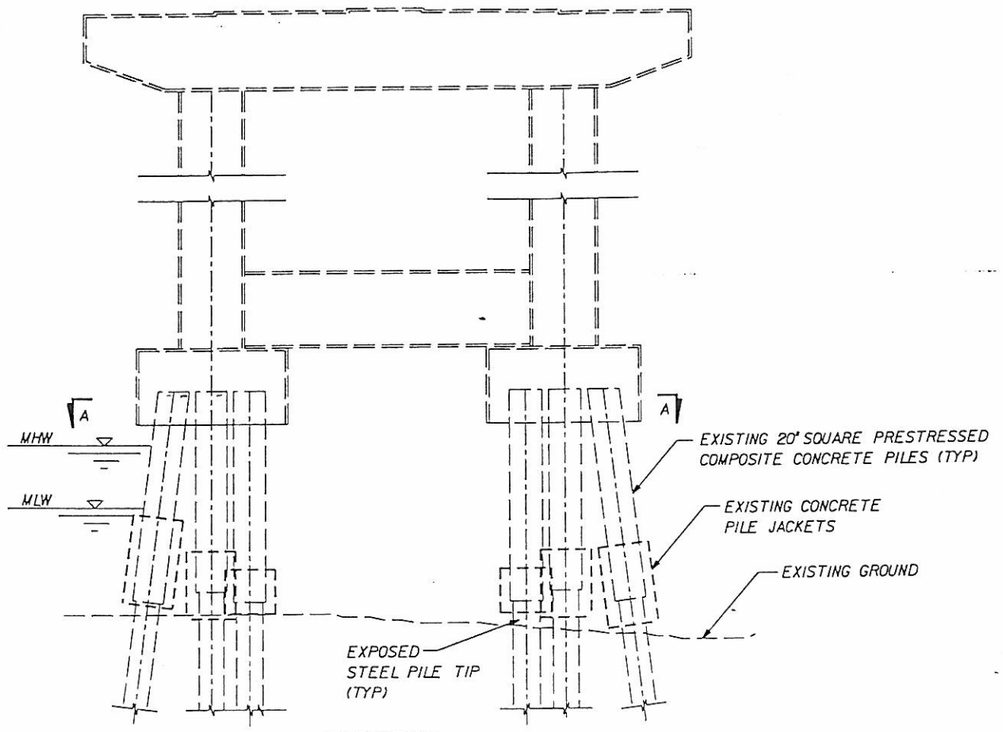

ELEVATION

EXISTING PIERS 21, 22, 23 & 25
NOT ALL PILES AT ONE PIER WILL BE REPAIRED

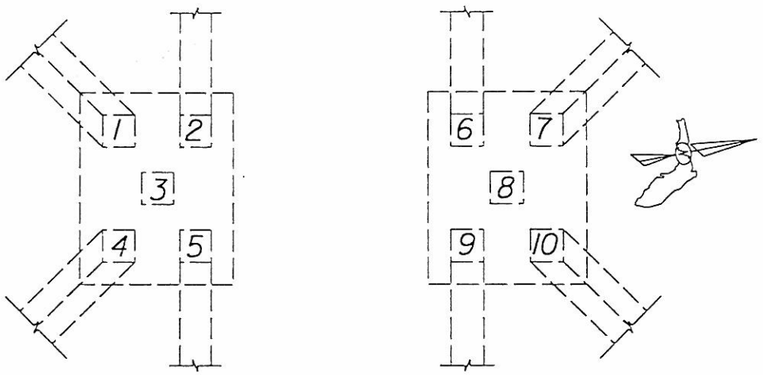

SECTION A-A

PILE NUMBERING SEQUENCE

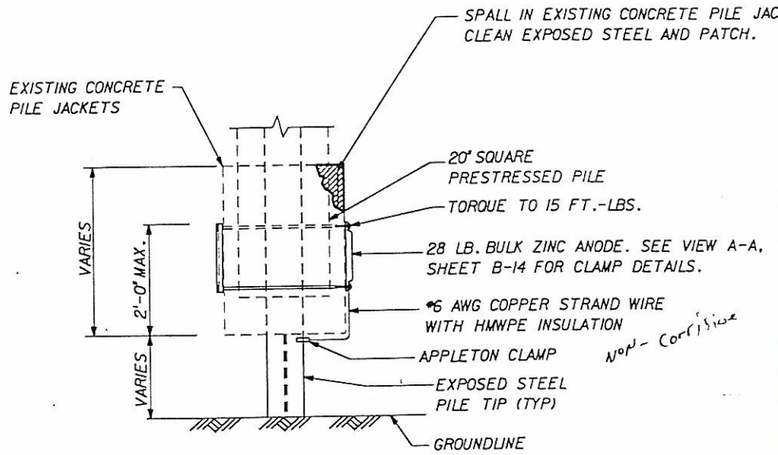

15" above btm of pile to Rock or 2' below existing btm

23-8 RT. center

84" exposed TIP

TYPICAL REPAIR TO EXISTING CONCRETE PILE JACKETS

CATHODIC PROTECTION AND SPALL REPAIR

1. CLEAN EXPOSED STEEL PILE TIP SURFACE WITH WIRE BRUSH TO BARE METAL PRIOR TO INSTALLATION OF CLAMP.
2. INSTALL CLAMP CAPABLE OF SUPPORTING A MINIMUM OF 50 LBS.
3. ATTACH 28 LB. BULK ZINC ANODE (HULL TYPE) AS MANUFACTURED BY ALLTRISTA ZINC PRODUCTS (GREENEVILLE, TN) OR EQUAL. REFER TO SHEET B-14 FOR DETAILS.
4. REMOVE LOOSE OR DELAMINATED CONCRETE FROM SPALLED AREA.
5. UNDERCUT ALL EXPOSED BARS AS DETAILED ON SHEET B-13.
6. CLEAN ALL EXPOSED STEEL OF CORROSION USING WIRE BRUSH OR OTHER METHODS AS NECESSARY (TO BE APPROVED BY THE ENGINEER).
7. CONNECT ZINC ANODE TO EXPOSED STEEL PILE TIP USING COPPER STRAND WIRE AS DETAILED ABOVE.
8. PATCH SPALLED AREA USING LATEX MODIFIED PORTLAND CEMENT CONCRETE OR ALTERNATIVE REPAIR MATERIAL SUITABLE FOR UNDERWATER REPAIR ON THE FDOT QUALIFIED PRODUCTS LIST.
9. SHOP DRAWING OF CLAMP, BRACKET, ANODE AND REPAIR MATERIAL TO BE PROVDIED TO THE ENGINEER FOR APPROVAL.
10. THE WORK DESCRIBED ON THIS SHEET FOR SPALL REPAIRS SHALL BE PAID UNDER PAY ITEM NO. 401-70, UNDERWATER SPALLED AREAS RESTORED (PER CUBIC FT.). ESTIMATED QUANTITY = 10 CUBIC FT.
11. THE WORK DESCRIBED ON THIS SHEET FOR CATHODIC PROTECTION SHALL BE PAID FOR UNDER PAY ITEM NO. 455-81-102, CATHODIC PROTECTION, ZINC ANODE (EACH). ESTIMATED QUANTITY = 15 EACH.

LOCATION FOR CATHODIC PROTECTION

INSTALL BULK ZINC ANODE AT THE FOLLOWING LOCATIONS WHERE PILE TIPS ARE EXPOSED OR REINFORCING STEEL IS EXPOSED IN THE EXISTING PILE JACKETS AS DIRECTED BY THE ENGINEER:

BENT	PILE NUMBERS *
21	1, 2, 7
22	1, 2, 5, 6, 7, 8
23	2, 5, 9, 10
25	9, 10

* REFER TO PILE NUMBERING SEQUENCE, SECTION A-A

NOTE THAT PILE DEFICIENCES ARE BASED ON THE FDOT BRIDGE INSPECTION REPORT OF 6/21/1999. CONTRACTOR SHALL NOTIFY THE ENGINEER OF EXISTING PILE CONDITIONS AND OBTAIN ENGINEER'S APPROVAL PRIOR TO PERFORMING ANY REPAIRS.

19805.03 PILEJACK.dgn SCALE:3 REVISION:0 02/18/00 LFS

REVISIONS					
Date	By	Description	Date	By	Description

	Names	Dates
Drawn by	LFS	12/99
Checked by	DBT	02/00
Designed by	LFS	12/99
Checked by	DBT	02/00
Approved by	LFS	02/18/00

ENGINEER OF RECORD:
Kisinger Campo and Associates Corp.
2203 N. LOIS AVE.
SUITE 1200
TAMPA, FLORIDA 33607

LOGO: KCA

Lee COUNTY

DEPARTMENT OF TRANSPORTATION

SHEET TITLE: PILE REPAIR DETAILS BIG CARLOS DRAW BRIDGE

PROJECT NAME: ALVA. BIG CARLOS & MATLACHA BASCULE BRIDGE REPAIR

Drawin

Index

BX1-105

BX1-105

BX1-106

BX1-106

E-3

PLOT STATION TEXT

WORK IDENTIFICATION

TRACE AND TAG ALL WIRES TERMINATING IN THE MOTOR CONTROL CENTER OF THE BIG CARLOS DRAW BRIDGE AND PRODUCE A CORRESPONDING ELEMENTARY WIRING DIAGRAM.

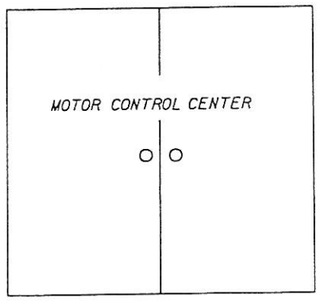

MOTOR CONTROL CENTER

BIG CARLOS DRAW BRIDGE

NOTES:

1. CONTRACTOR TO TRACE ALL EXISTING WIRING FROM THE MOTOR CONTROL CENTER AND LABEL ALL WIRES. WIRES SHALL BE INDENTIFIED AND THE DESIGNATION PERMANENTLY MARKED ON DURABLE FIBER TAGS OR ON PLASTIC BANDS WITH HEAT SHRUNK PROTECTIVE SLEAVING SO THAT ANY WIRE MAY BE TRACED FROM TERMINAL TO TERMINAL. THE DESIGNATIONS SHALL CORRESPOND WITH THOSE SHOWN ON THE WIRING DIAGRAMS.
2. CONTRACTOR TO PRODUCE NEW ELEMENTARY WIRING DIAGRAMS DEPICTING THE CURRENT WIRING SCHEMATIC.
3. REFER TO THE EXISTING ELECTRICAL DRAWINGS. NOTE THAT THE CURRENT WIRING MAY NOT MATCH THE EXISTING WIRING DIAGRAMS.
4. CONTRACTOR SHALL PROVIDE AN ALTERNATE POWER SOURCE FOR ALL ESSENTIAL EQUIPMENT, INCLUDING NAVIGATION LIGHTS AND TRAFFIC SIGNALS, DURING ANY ELECTRICAL POWER OUTAGES.
5. ALL ELECTRICAL WORK SHALL COMPLY TO THE LATEST EDITION OF THE NATIONAL ELECTRIC CODE AND ALL LOCAL CODES.
6. PAY ITEM 508-70-5, ELECTRICAL SYSTEM ANALYSIS (LUMP SUM), TO INCLUDE ALL COSTS ASSOCIATED WITH TRACING AND LABELING OF WIRES AND PRODUCING THE NECESSARY ELEMENTARY WIRING DIAGRAMS.

19805.03 ELECTDETAILS.DGN SCALE:16 REVISION:0 02/18/00 PEC

REVISIONS

Date	By	Description	Date	By	Description

	Names	Dates
Drawn by	JAC	10/99
Checked by	LFS	10/99
Designed by	LFS	10/99
Checked by	PLH	12/99
Approved by	[signature]	02/18/00

ENGINEER OF RECORD:
Kisinger Campo and Associates Corp.
2203 N. LOIS AVE.
SUITE 1200
TAMPA, FLORIDA 33607

LOGO: KCA

Lee COUNTY

DEPARTMENT OF TRANSPORTATION

SHEET TITLE: ELECTRICAL REPAIR DETAILS BIG CARLOS DRAW BRIDGE

PROJECT NAME: ALVA, BIG CARLOS & MATLACHA BASCULE BRIDGE REPAIR

Drawing

Index

BX1-106

BX1-106

BX1-107

BX1-107

County of Lee

BIG CARLOS PASS BRIDGE REPAIRS

JANUARY 1980

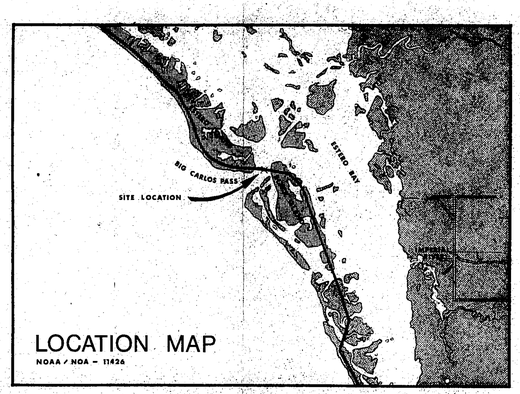

BOARD OF COMMISSIONERS:

Chairman - Richard L. Steele
Vice Chairman - Roland Q. Roberts
Commissioner - R. Douglas Taylor
Commissioner - Wade H. Scaffe
Commissioner - Harry E. Rodda

County Administrator - Lavon Wisher
Director, Division of Transportation - Benjamin C. Pratt

ENGINEER:

James E. Hirst, P.E. / P.L.S.
Naples, Florida

CONTRACTOR:

#120028
BIG CARLOS PASS

BX1-107

BX1-107

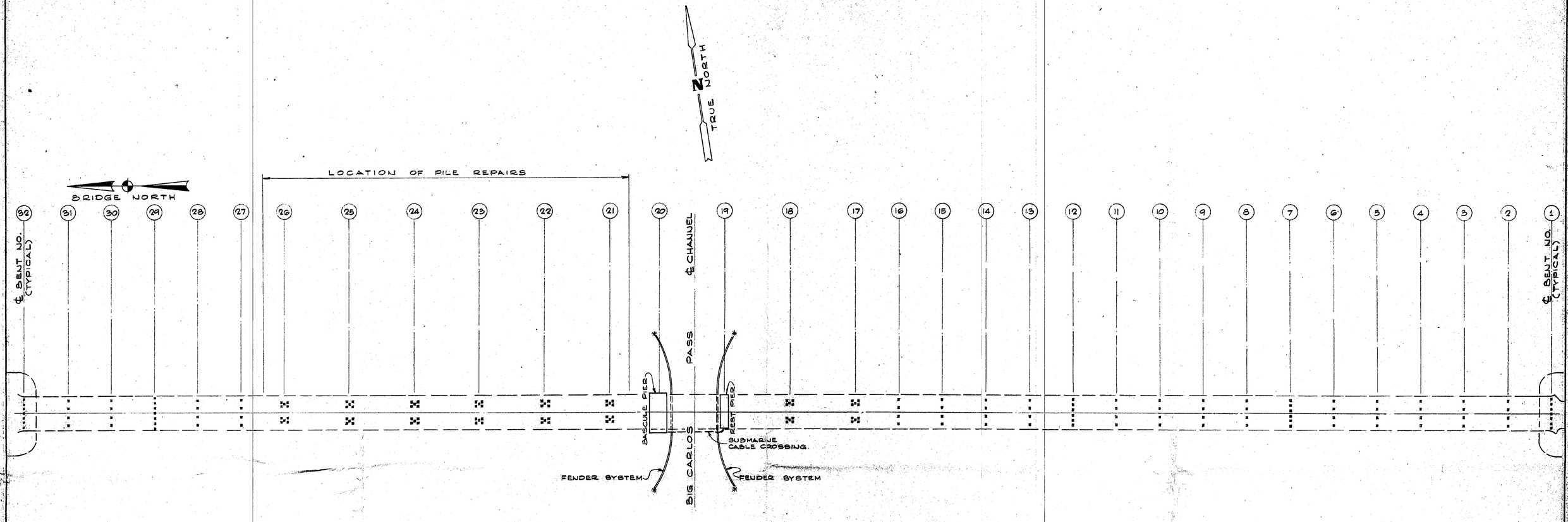

BENT LOCATION PLAN

1" = 50'

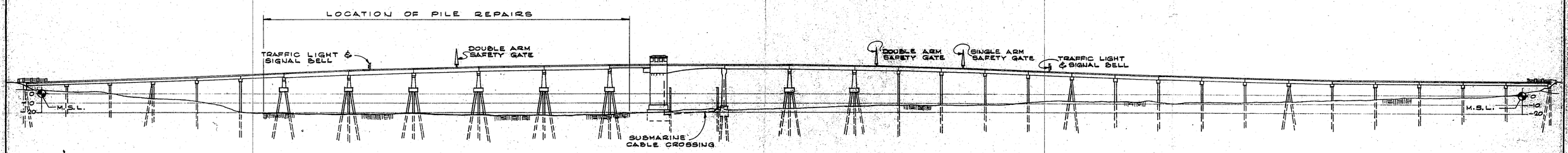

BRIDGE ELEVATION

1" = 50'

JAMES E. HIRST, P.E./P.L.S.
NAPLES, FLORIDA
CIVIL - STRUCTURAL ENGINEERING

BIG CARLOS PASS BRIDGE REPAIRS

BENT LOCATION PLAN

DRAWN BY: H.D CHCK BY: J.H.	DATE: 1/18/80	REVISIONS:	SHEET 1 OF 5

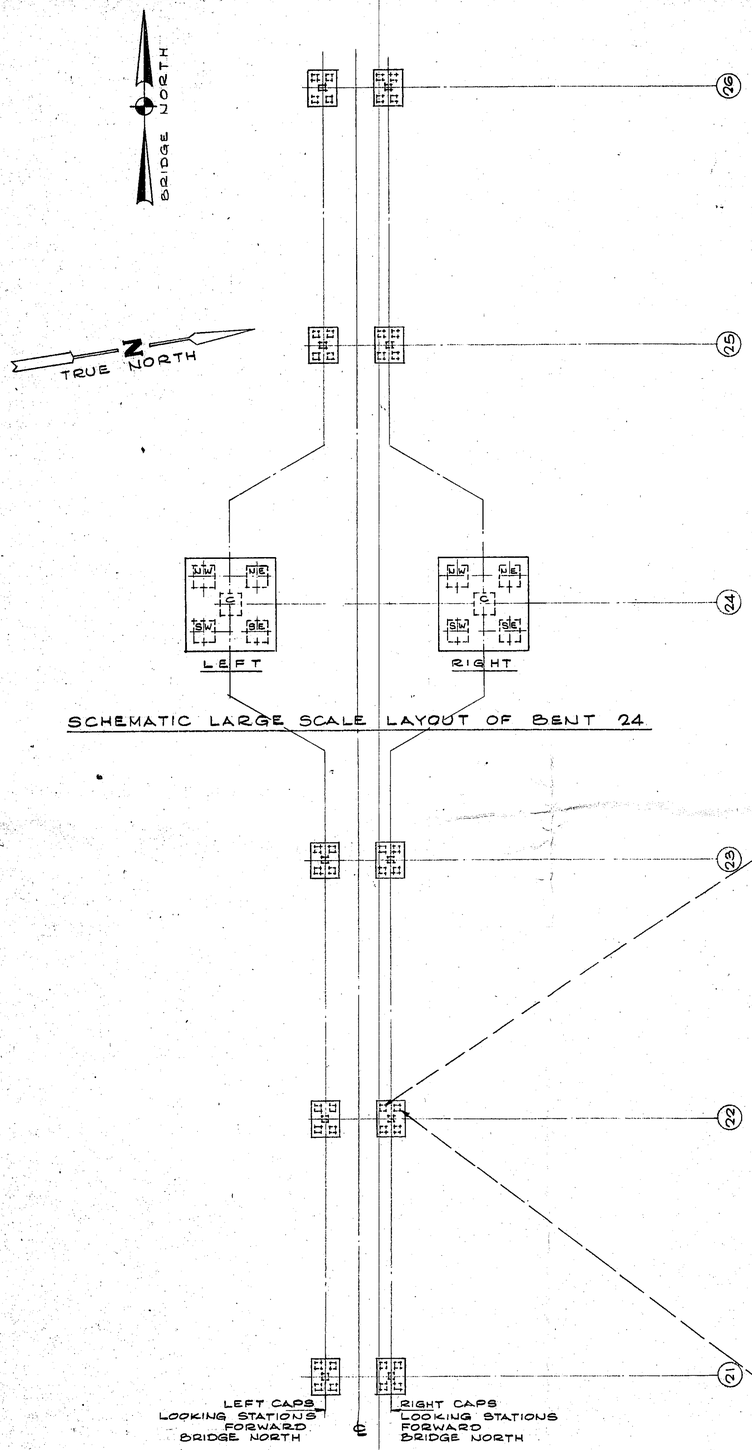

SCHEMATIC LARGE SCALE LAYOUT OF BENT 24

PILE DESIGNATION LAYOUT

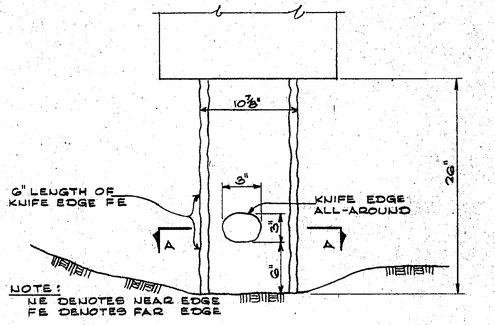

ELEVATION
LOOKING BRIDGE NORTH

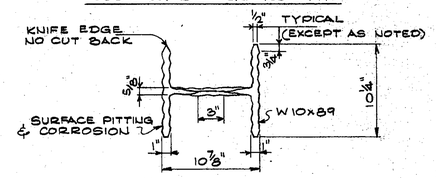

SECTION A-A

BENT 22, RIGHT FOOTING, NW PILE
NO SCALE

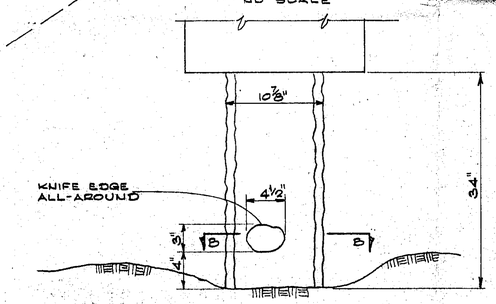

ELEVATION
LOOKING BRIDGE NORTH

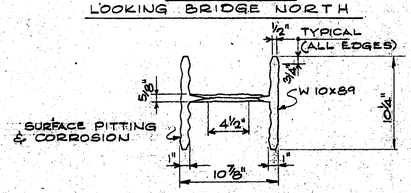

SECTION B-B

BENT 22, RIGHT FOOTING, NE PILE
NO SCALE

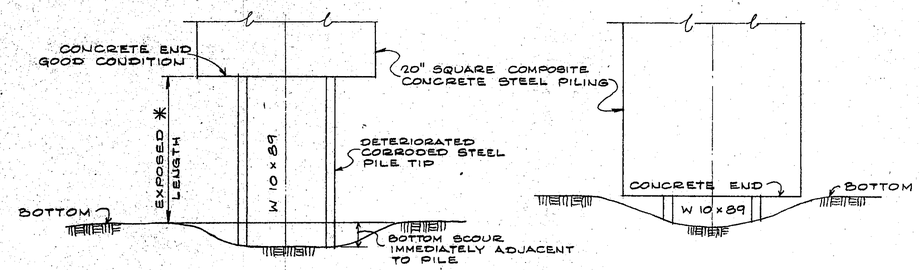

TYPICAL CONDITION OF EXPOSED STEEL PILE TIP
NO SCALE

TYPICAL ELEVATION OF CONCRETE EVEN WITH BOTTOM CONDITION
NO SCALE

PILE CONDITIONS

BENT NO.	APPROXIMATE BOTTOM ELEVATION * FEET (M.S.L.)	CAP	PILE	LENGTH OF EXPOSED STEEL TIP * (INCHES)
21	-18.0	LEFT	NW	EVEN WITH BOTTOM
			NE	
			C	
			SW	
			SE	
		RIGHT	NW	EVEN WITH BOTTOM
			NE	
			C	
			SW	
			SE	
22	-18.5	LEFT	NW	EVEN WITH BOTTOM
			NE	10
			C	EVEN WITH BOTTOM
			SW	20
			SE	16
		RIGHT	NW	26
			NE	34
			C	EVEN WITH BOTTOM
			SW	EVEN WITH BOTTOM
			SE	EVEN WITH BOTTOM
23	-19.0	LEFT	NW	36
			NE	23
			C	EVEN WITH BOTTOM
			SW	23
			SE	10
		RIGHT	NW	EVEN WITH BOTTOM
			NE	36
			C	64
			SW	26
			SE	62
24	-19.5	LEFT	NW	31
			NE	10
			C	EVEN WITH BOTTOM
			SW	58
			SE	20
		RIGHT	NW	31
			NE	13
			C	16
			SW	55
			SE	26
25	-20	LEFT	NW	42
			NE	35
			C	28
			SW	22
			SE	26
		RIGHT	NW	43
			NE	17
			C	EVEN WITH BOTTOM
			SW	1
			SE	EVEN WITH BOTTOM
26	-19.5	LEFT	NW	EVEN WITH BOTTOM
			NE	
			C	
			SW	
			SE	
		RIGHT	NW	EVEN WITH BOTTOM
			NE	
			C	
			SW	
			SE	

* FROM ECKERT & HIRST NOVEMBER 1978 UNDERWATER INSPECTION. DATA BELIEVED TO BE CORRECT AT THE TIME OF INSPECTION, SUBSEQUENT BOTTOM CHANGES NOT ACCOUNTED. CONTRACTOR SHALL CONFIRM ALL EXISTING FIELD CONDITIONS.

JAMES E. HIRST, P.E./P.L.S.
NAPLES, FLORIDA
CIVIL - STRUCTURAL ENGINEERING

BIG CARLOS PASS BRIDGE REPAIRS

PILE LOCATION PLAN & BOTTOM CONDITIONS

DRAWN BY: H.Q	DATE:	REVISIONS:	SHEET 2 OF 5
CHCK BY: J.H.	1/18/80		

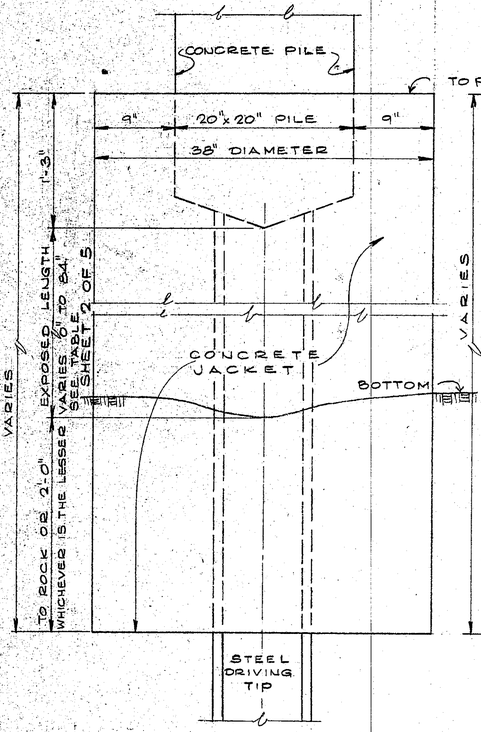

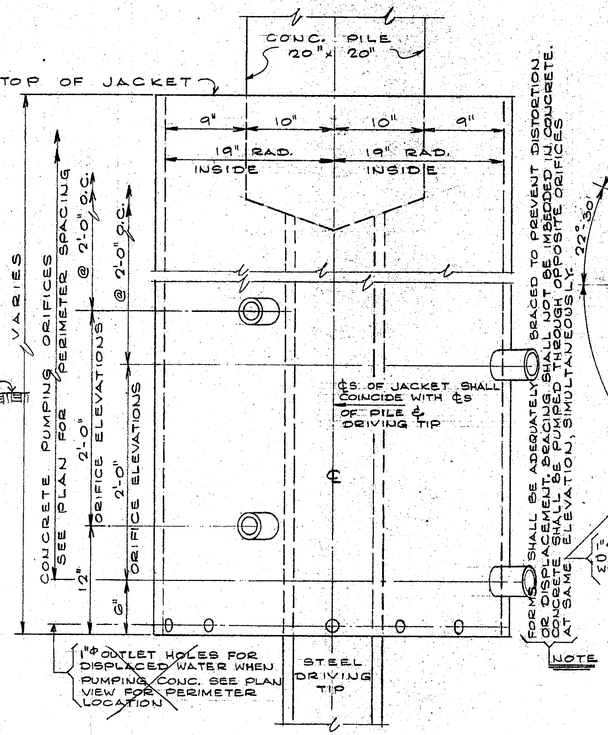

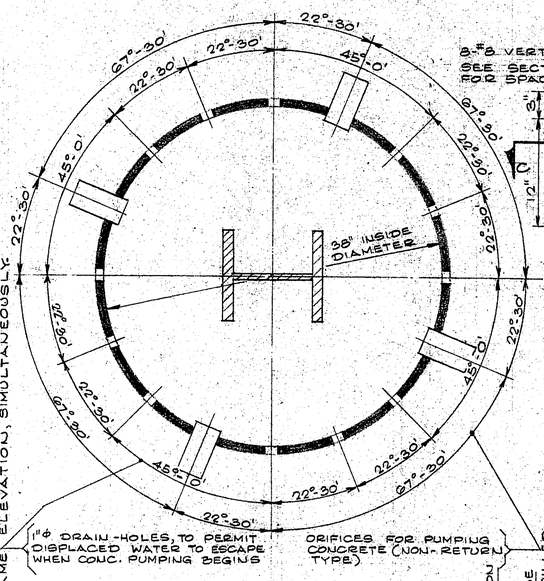

PLAN VIEW OF FORMS

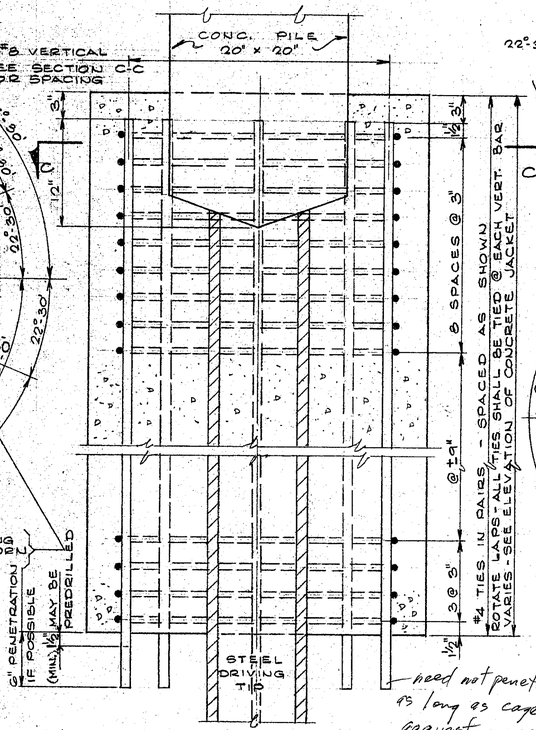

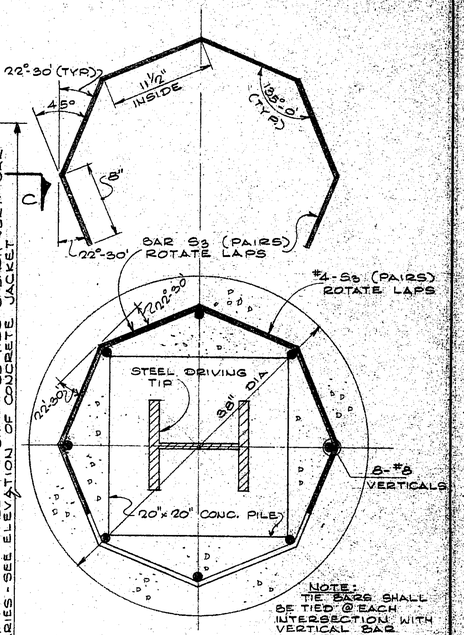

SECTION C-C

need not penetrate rock as long as cage is secure against movement

ELEVATION CONCRETE JACKET

ELEVATION OF FORMS

VERTICAL SECTION THRU JACKET

ALTERNATE ROUND CONCRETE JACKET

1½" = 1'-0"

ESTIMATED QUANTITIES		
ITEM	UNIT	QUANTITY
REINFORCEMENT BARS	LBS	12,050
CONCRETE	CU. YDS.	64.8

NOTE: QUANTITIES STATED ARE ESTIMATED AND ARE SHOWN AS A GUIDE ONLY FOR A BID BASE. THE BIDDER SHALL SATISFY HIMSELF AS TO THE REQUIRED QUANTITIES BEFORE SUBMITTING HIS PROPOSAL.

JAMES E. HIRST, P.E./P.L.S.
NAPLES, FLORIDA
CIVIL - STRUCTURAL ENGINEERING

BIG CARLOS PASS BRIDGE REPAIRS

JACKET DETAILS

DRAWN BY: H.D. CHCK BY: J.H.	DATE: 1/18/80	REVISIONS:	SHEET 4 OF 5

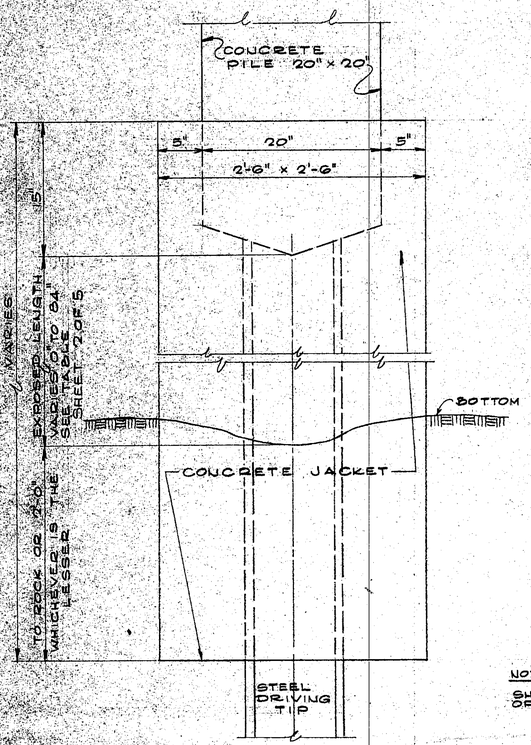

ELEVATION CONCRETE JACKET

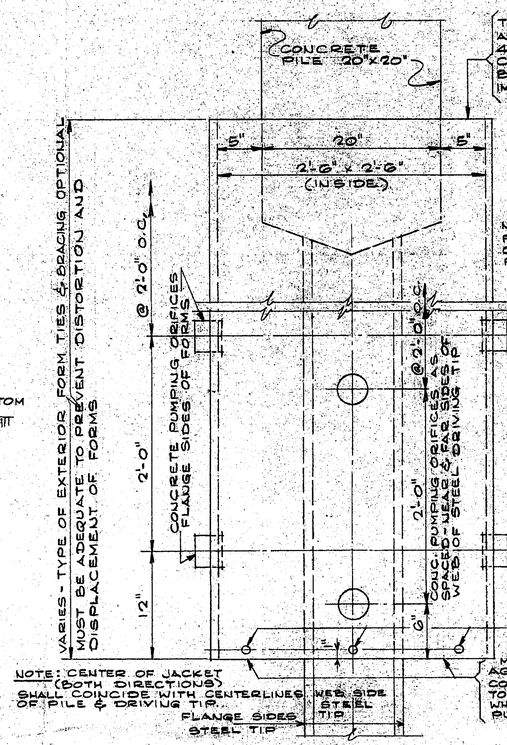

ELEVATION OF FORMS

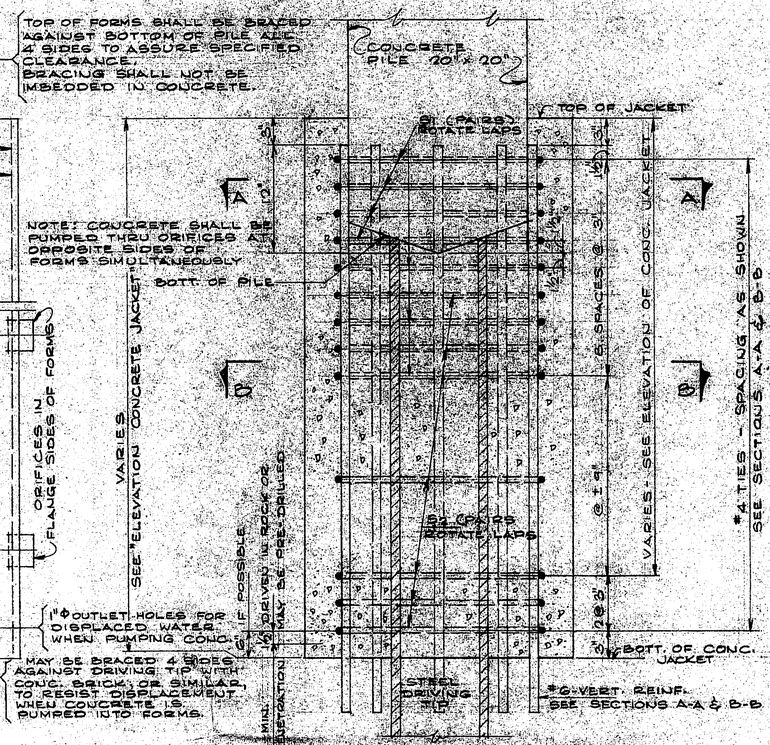

VERTICAL SECTION THRU JACKET

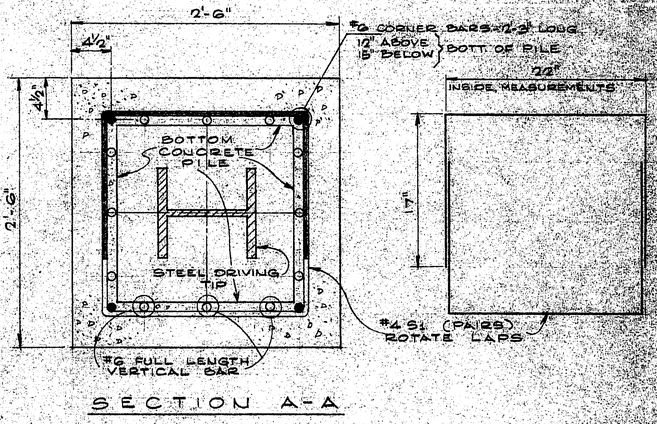

SECTION A-A

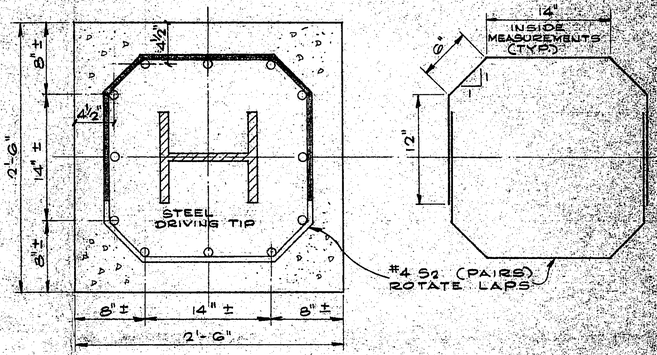

SECTION B-B

ALTERNATE SQUARE CONCRETE JACKET

1½" = 1'-0"

ESTIMATED QUANTITIES		
ITEM	UNIT	QUANTITY
REINFORCEMENT BARS	LBS.	11,510
CONCRETE	CU. YDS.	49.6

NOTE: QUANTITIES STATED ARE ESTIMATED AND ARE SHOWN AS A GUIDE ONLY FOR A BID BASE. THE BIDDER SHALL SATISFY HIMSELF AS TO THE REQUIRED QUANTITIES BEFORE SUBMITTING HIS PROPOSAL.

JAMES E. HIRST, P.E./P.L.S.
NAPLES, FLORIDA
CIVIL - STRUCTURAL ENGINEERING

BIG CARLOS PASS BRIDGE REPAIRS

JACKET DETAILS

DRAWN BY: H.D. DATE: 1/18/80
CHCK BY: J.H.
REVISIONS:
SHEET 8 OF 9

SPECIFICATIONS FOR PILE REPAIRS

I. SCOPE:

THE PURPOSE OF THE WORK IS TO PROTECT THE ERODING STEEL DRIVING TIPS OF THE EXISTING CONCRETE PILES IN BENTS #21 THROUGH #26.

THE WORK CONSISTS OF FURNISHING ALL LABOR, MATERIALS & EQUIPMENT NECESSARY FOR BOTTOM EXCAVATION, CLEANING & PREPARING EXISTING CONCRETE, CLEANING STEEL PILE DRIVING TIPS, PLACING & REINFORCEMENT, BUILDING & PLACING FORMS, FILLING FORMS WITH PUMP CONCRETE, & REMOVING FORMS IN ACCORDANCE WITH THE PLANS, THESE SPECIFICATIONS, & THE "FLORIDA DEPARTMENT OF TRANSPORTATION STANDARD SPECIFICATIONS FOR ROAD & BRIDGE CONSTRUCTION" DATED 1977 & SUBSEQUENT SUPPLEMENTS.

THE FINAL CONCRETE JACKETS SHALL EXTEND FROM 15 INCHES ABOVE THE BOTTOM OF THE EXISTING CONCRETE PILES TO ROCK OR A MAXIMUM OF 2 FEET BELOW THE EXISTING ERODED BOTTOM SURFACE.

II. EXCAVATION:

THE BOTTOM EXCAVATION AROUND EACH STEEL PILE TIP SHALL BE ADEQUATE TO PROPERLY ALLOW FOR EACH OF THE WORK ITEMS MENTIONED UNDER SECTION I, SCOPE.

III. CLEANING AND PREPARING CONCRETE PILE SECTIONS:

THE CONCRETE PILE SECTIONS SHALL BE CLEANED BY WATER JET, OR OTHER ADEQUATE MEANS, TO A DISTANCE 15 INCHES ABOVE THE LOWER END OF THE CONCRETE PILE SECTIONS TO REMOVE MARINE GROWTH ON THE CONCRETE SURFACE. THE BOTTOM OF THE EXISTING CONCRETE PILE SECTIONS SHALL BE SLOPED UPWARD FROM THE STEEL TIPS AT AN ANGLE OF ABOUT 20°.

IV. CLEANING STEEL PILE DRIVING TIPS

THE STEEL DRIVING TIPS SHALL BE CLEANED TO A NEAR WHITE SURFACE BY WATER JET OR OTHER ADEQUATE MEANS, FROM THE BOTTOM OF THE CONCRETE PILE SECTIONS TO ROCK OR 2 FEET BELOW THE ERODED BOTTOM SURFACE, WHICHEVER IS THE LESSER.

V. REINFORCEMENT BARS

THE REINFORCEMENT BARS SHALL BE OF BILLET STEEL MEETING THE MINIMUM REQUIREMENTS OF A.S.T.M. DESIGNATION A-15, GRADE 50 (MINIMUM). THE REINFORCEMENT BARS SHALL BE DEFORMED, MEETING THE REQUIREMENTS OF A.S.T.M. DESIGNATION A-305.

REINFORCEMENT STEEL SHALL BE OF THE SIZE SPECIFIED, CUT & BENT TO THE GEOMETRY DESIGNATED ON THE PLANS.

THE REINFORCEMENT BARS SHALL BE SECURELY TIED AT EACH INTERSECTION OF 2 BARS & BRACED TO MAINTAIN THE POSITION SHOWN ON THE PLANS. THE BARS SHALL BE FREE OF MILL SCALE, GREASE, RUST, MARINE GROWTH, OR ANY OTHER SUBSTANCE THAT WOULD PREVENT COMPLETE & POSITIVE BONDING.

VI. FORMS

AFTER THE PILE CLEANING OPERATION & THE PLACEMENT OF REINFORCEMENT HAS BEEN APPROVED BY THE ENGINEER, SUBSTANTIAL & WELL-BRACED FORMS SHALL BE INSTALLED. THEY SHALL BE CAPABLE OF WITHSTANDING THE PRESSURES OF CONCRETE PUMPING & SITE ENVIRONMENT, WITHOUT DISPLACEMENT OR DEFORMATION.

THE FORMS SHALL EXTEND FROM 15 INCHES ABOVE THE END OF THE CONCRETE PILE SECTIONS TO ROCK OR 2 FEET BELOW THE ERODED BOTTOM SURFACE, WHICHEVER IS THE LESSER.

THE FORMS SHALL BE INSTALLED WITH LATERAL INSIDE DIMENSIONS AS SHOWN ON THE PLANS. THE FORMS SHALL BE PROVIDED WITH CONCRETE PUMPING ORIFICES AS SHOWN ON THE PLANS. THEY SHALL BE THE NON-TURN TYPE.

ONE INCH HOLES SHALL BE PROVIDED AROUND THE BOTTOM OF THE FORMS, AS SHOWN.

THE FORMS SHALL BE REMOVED AFTER THE CONCRETE HAS HARDENED, BUT NOT LESS THAN 48 HOURS AFTER PLACING THE CONCRETE, SO THAT THE CONCRETE CAN BE INSPECTED BY THE ENGINEER & REPAIRS ORDERED IF NECESSARY. SUCH REPAIRS SHALL BE MADE BY THE CONTRACTOR WITHOUT COST TO THE OWNER.

VII. CONCRETE

THE CONCRETE SHALL BE PUMP CONCRETE. IT SHALL CONSIST OF A MIXTURE OF A STANDARD BRAND PORTLAND CEMENT, TYPE II, FINE AGGREGATE, COARSE AGGREGATE, WATER, A RETARDING AGENT (BUT NOT A SPECIFIC AIR-ENTRAINING AGENT).

THE PROPORTIONS OF THE MIX SHALL BE SUCH AS TO PRODUCE A CONCRETE HAVING A MINIMUM COMPRESSIVE STRENGTH OF 4000 POUNDS PER SQUARE INCH. THE TEST CYLINDERS SHALL BE PREPARED IN ACCORDANCE WITH A.A.S.H.T.O. SPECIFICATION T 23, AND TESTED IN ACCORDANCE WITH A.A.S.H.T.O. SPECIFICATION T 22, BY A CERTIFIED LABORATORY ACCEPTABLE TO THE ENGINEER.

THE MAXIMUM WATER-CEMENT RATIO SHALL BE 0.48 BY WEIGHT. MAXIMUM SLUMP SHALL BE 5 INCHES. A MINIMUM OF 2 SLUMP TESTS SHALL BE MADE DAILY IN ACCORDANCE WITH SECTION T 152 OR T 196 OF THE A.A.S.H.T.O. SPECIFICATIONS.

a. THE CEMENT SHALL BE A STANDARD BRAND OF TYPE II PORTLAND CEMENT, CONFORMING TO REQUIREMENTS OF A.S.T.M. SPECIFICATIONS C 150-68. CEMENT CONTAINING LUMPS OR HAVING BEEN IN STORAGE MORE THAN SIX MONTHS SHALL NOT BE USED.

b. FINE AGGREGATE: THE FINE AGGREGATE SHALL MEET THE SPECIFICATIONS OF SECTION 902-1 OF THE DEPARTMENT OF TRANSPORTATION SPECIFICATIONS.

c. COARSE AGGREGATE: THE COARSE AGGREGATE SHALL MEET THE SPECIFICATIONS OF SECTION 901 FOR GRADE 14 OF THE DEPARTMENT OF TRANSPORTATION SPECIFICATIONS.

d. WATER: THE WATER TO BE USED IN THE CONCRETE MIX SHALL MEET THE SPECIFICATION REQUIREMENTS OF SECTION 923 OF THE DEPARTMENT OF TRANSPORTATION SPECIFICATIONS.

e. RETARDING AGENT: THE RETARDING AGENT TO BE USED IN THE MIX SHALL MEET THE REQUIREMENTS OF SECTION 924, ADMIXTURE FOR CONCRETE, OF THE DEPARTMENT OF TRANSPORTATION SPECIFICATIONS.

f. CORROSION INHIBITOR: THE CORROSION INHIBITING ADMIXTURE SHALL BE DAREX CORROSION INHIBITOR, AS MANUFACTURED BY THE CONSTRUCTION PRODUCTS DIVISION, W.R. GRACE & CO. THE ADMIXTURE SHALL BE USED IN STRICT ACCORDANCE WITH THE MANUFACTURER'S RECOMMENDATIONS. THE ADMIXTURE SHALL COMPLY WITH A.S.T.M. DESIGNATION C-494, TYPE C.

g. PUMPING CONCRETE: THE PUMPING EQUIPMENT SHALL CONSIST OF A POSITIVE DISPLACEMENT PUMP. THE MINIMUM HOSE SIZE SHALL BE TWO INCHES IN DIAMETER. ALL OIL OR OTHER RUST-INHIBITING AGENTS SHALL BE CLEANED FROM SURFACES THAT MAY COME INTO CONTACT WITH THE CONCRETE BEFORE BEING USED ON THE PROJECT. THE PUMPING EQUIPMENT, INCLUDING HOSES, SHALL BE LUBRICATED BY PUMPING CONCRETE FROM WHICH THE COARSE AGGREGATE HAS BEEN OMITTED, THROUGH THE LINE. THIS CONCRETE SHALL NOT BE PLACED IN THE FORMS. THE PUMP SHALL BE CAPABLE OF SUPPLYING A CONTINUOUS FLOW OF CONCRETE AT A MINIMUM PRESSURE OF 250 POUNDS PER SQUARE INCH. IF PROLONGED DELAYS ARE ENCOUNTERED, THE SYSTEM SHALL AGAIN BE LUBRICATED AS STATED IN THE FOREGOING.

KINKING OF THE HOSES, OR OTHER CONDITIONS PREVENTING A SMOOTH EVEN FLOW OF CONCRETE SHALL BE AVOIDED. THE CONTRACTOR SHALL PROVIDE ALL ORIFICES, PRESSURE GAGES, SMALL TOOLS AND ACCESSORIES TO ASSURE THAT THE PUMPING OPERATION WILL BE CONDUCTED WITH A MINIMUM AMOUNT OF INTERRUPTION.

CONCRETE SHALL BE PUMPED THROUGH BOTTOM ORIFICES UNTILL IT FLOWS FREELY THROUGH THE NEXT ABOVE ORIFICES. THIS OPERATION SHALL BE CONTINUED UNTILL THE CONCRETE FLOWS FREELY OVER THE TOP OF THE FORMS AT ALL POINTS.

AT NO TIME SHALL THE CONCRETE TRAVEL WITHIN THE FORMS EXCEED 8 FEET.

VIII. INSPECTIONS:

NOTIFICATION SHALL BE GIVEN THE ENGINEER THAT THE WORK IS READY FOR INSPECTION WHEN THE CLEANING OF THE CONCRETE & STEEL TIP HAS BEEN COMPLETED, AS SPECIFIED, AND THE REINFORCEMENT BARS ARE IN PLACE, BUT BEFORE THE FORMS HAVE BEEN PLACED.

IMMEDIATELY AFTER THE INSPECTION HAS BEEN MADE, AND BEFORE THERE IS AN OPPORTUNITY FOR MARINE GROWTH, THE FORMS SHALL BE PLACED & THE CONCRETE PUMPED. IF THERE IS A DELAY BETWEEN THE INSPECTION & THE POURING OF THE CONCRETE, A SECOND INSPECTION SHALL BE MADE. IF ANY MARINE GROWTH HAS APPEARED, THE CLEAUING PROCESS SHALL BE REPEATED & AGAIN APPROVED BY THE ENGINEER.

AFTER THE FORMS ARE REMOVED, ANOTHER INSPECTION BY THE ENGINEER SHALL BE MADE TO DETERMINE IF ANY UNACCEPTABE CONDITION HAS BEEN CREATED DURING POURING (I.E. COLD JOINTS, LAITENCE HONEYCOMBING, CRACKING, LOSS OF BOND, FORM MISALLIGNMENT, INADEQUATE BOTTOM PENETRATION) JACKET ACCEPTABILITY SHALL BE BASED ON THIS FINAL INSPECTION.

IX SITE INVESTIGATION:

THE CONTRACTOR, BY SIGNING THE CONTRACT, ACKNOWLEGES THAT HE, AND ALL OF HIS SUB-CONTRACTORS, HAVE SATISFIED THEMSELVES AS TO THE LOCATION & NATURE OF THE WORK AND LOCAL CONDITIONS, BUT NOT LIMITED TO THOSE BEARING ON TRANSPORTATION, STORAGE, HANDLING & DISPOSAL OF MATERIALS, ACCESSIBILITY, MARINE TRAFFIC, TIDAL CURRENTS, CHARACTER OF EQUIPMENT NEEDED, AND ANY OTHER FACTORS THAT MAY BECOME EVIDENT BEFORE & DURING THE PROSECUTION OF THE WORK. FAILURE OF THE CONTRACTOR TO PROPERLY & COMPLETELY EVALUATE ANY FACTORS EFFECTING THE WORK OR COST, PRIOR TO BIDDING, SHALL NOT FORM A BASIS FOR ADDITIONAL COMPENSATION, IF HE IS AWARDED THE CONTRACT.

X. MAINTAINANCE OF MARINE AND BRIDGE TRAFFIC:

INTERFERENCE WITH MARINE TRAFFIC IN POSTED CHANNELS SHALL BE KEPT TO A MINIMUM. THE CONTRACTOR SHALL SCHEDULE & PERFORM HIS WORK COMPLYING WITH INSTRUCTIONS FROM LOCAL AND OTHER AUTHORITIES HAVING CONTROL OVER NAVIGABLE WATERS.

IF THE CONTRACTOR'S CHOSEN METHOD OF OPERATION SHALL REQUIRE ANY RESTRICTION OF BRIDGE HIGHWAY TRAFFIC, MAINTAINANCE OF TRAFFIC SHALL BE IN ACCORDANCE WITH DEPARTMENT OF TRANSPORTATION SPECIFICATIONS, SECTION 102, AS APPROVED BY THE LEE COUNTY DIVISION OF TRANSPORTATION.

XI. FINAL CLEANUP

THE CONTRACTOR SHALL BE RESPONSIBLE FOR THE IMMEDIATE REMOVAL OF ALL MATERIALS DROPPED INTO THE WATER. UPON COMPLETION OF THE WORK, THE CONTRACTOR SHALL, TO THE SATISFACTION OF THE ENGINEER, REMOVE ALL MACHINERY, EQUIPMENT, SURPLUS & DISCARDED MATERIALS RUBBISH AND TEMPORARY STRUCTURES FROM THE SITE. MATERIALS DEPOSITED ON ADJACENT PROPERTY SHALL NOT BE CONSIDERED AS HAVING BEEN DISPOSED OF PROPERLY.

JAMES E. HIRST, P.E./P.L.S.
NAPLES, FLORIDA
CIVIL STRUCTURAL ENGINEERING

BIG CARLOS PASS BRIDGE REPAIRS

SPECIFICATIONS

DRAWN BY: RD DATE:	REVISIONS:	SHEET 5 OF
CHCK BY: J.H. 11/15/80		

BX1-113

BX1-113

BIG CARLOS (BR.# 120028)

FED. ROAD DIV. NO.	STATE	PROJECT NO.	FISCAL YEAR	SHEET NO.
3	FLA.	12530-3153	61	B-1

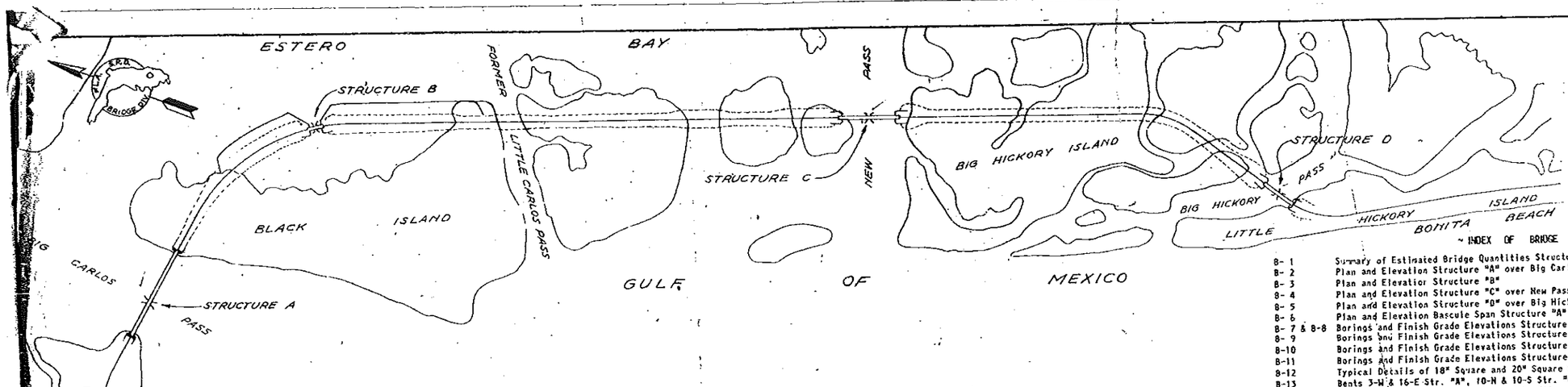

SUMMARY OF ESTIMATED BRIDGE QUANTITIES

ITEM NO.	ITEM	UNIT	QUANTITY STRUCTURE A	STRUCTURE B	STRUCTURE C	STRUCTURE D	TOTAL	
① 56-1	Excavation for Structures	Cu. Yd.	480				480.	
300-1A	Class A Concrete (Approach Spans) 2,256	Cu. Yd.	(2,081)	312	1,126	678	(4,199)	4,378
300-1B	Class A Concrete (Trunnion Pier & Rest Pier)	Cu. Yd.	(841)				(841)	800
300-1C	Class A Concrete (Counterweight)	Cu. Yd.	115				115	
300-4	Seal Concrete	Cu. Yd.	(459)				(459)	405
300-8	Concrete Handrail 3,219	Lin. Ft.	(2,926)	480	1,872	1,104	(6,382)	6,670
310-1	Reinforcing Steel 517,800	Lb.	(482,600)	65,500	242,400	144,900	(935,400)	
②320-2A	Structural Steel (Bascule Leaf)	Lump Sum	1				1	
③320-2B	Structural Steel (Flanking Spans Ladders & Platforms)	Lump Sum	1				1	970,600
④320-2C	Structural Steel (Access Ladders all Fixed Bridges)	Lump Sum					1	
⑤320-2D	Structural Steel (Shoe Assemblies)	Lump Sum	1				1	
320-4	Machinery and Castings	Lump Sum	1				1	
340-1	Treated Structural Timber (12 lb. Treatment) 18.46	M.F.B.M.	(18.72)	5.78	5.78	5.78	(36.06)	35.80
401-1A	Prestressed Beams (Type II-18-10) 9,163	Lin. Ft.	(3,595)	946	3,406	1,892	(5,839)	10,907
401-1B	Prestressed Beams (Type III-18-10)	Lin. Ft.	2,496		356.5	356.5	3,209	
403-2	Treated Timber Piling	Lin. Ft.	6,240	3,220	3,220	2760	15,440	
403-3	Precast Concrete Piling Furnished (20"□ Prestressed)	Lin. Ft.		2,200	6,800	3100	12,100	
403-4	Precast Concrete Piling Driven (20"□ Prestressed) 9,050	Lin. Ft.		2,200	6,800	3100	12,100	
403-5	Composite Concrete & Steel Piling Furnished (20"□ Prestressed)	Lin. Ft.	(8,000)				(8,000)	9,050
403-6	Composite Concrete & Steel Piling Driven (20"□ Prestressed)	Lin. Ft.	(8,000)				(8,000)	9,050
403-7	Steel Piling Furnished (14 BP 73) 9,050	Lin. Ft.	(1,400)				(1,400)	350
403-8	Steel Piling Driven (14 BP 73) 350	Lin. Ft.	(1,400)				(1,400)	350
403-9A	Unloaded Test Piles (20"□ Prestressed) 350	Lin. Ft.		140	360	190	690	
403-9B	Unloaded Test Piles (20"□ Prestressed Composite)	Lin. Ft.	440				440	
403-9C	Unloaded Test Piles (14 BP 73)	Lin. Ft.	100				100	
⑥403-10	Test Loads (110 Tons)	Each	1	1	1	1	4	
403-14	Pinching	Per Pile Bent	271				271	
403-20	Shoes for Timber Piles	Each	156				156	
406-1	Shear Connectors	Lb.	973				973	
408-1A	Steel Roadway Floor (5" deep)	Sq. Ft.	1,785				1,785	
408-1B	Steel Roadway Floor (3" deep, Armored)	Sq. Ft.	389				389	
408-2	Steel Sidewalk Floor (11" deep)	Sq. Ft.	525				525	
410-1	Electrical Equipment	Lump Sum	1				1	
411-1	Navigation Lights	Lump Sum				1	1	
416-1	Control House	Lump Sum	1				1	
456-1	Riprap (Sand-Cement)	Cu. Yd.	195				195	
465-1	Guardrail (Aluminum) 320	Lin. Ft.	(2,922)	503	1,895	1127	(6,447)	6,795

NOTE: Payment for incidental items not specifically covered in the individual bid items shall be included in the Contract Prices for bid items.

① Excavation for Structures (Bascule Pier and Rest Pier) See Section 5b of the Specifications.
② Item No. 320-2A includes all Structural Steel in Bascule Leaf and Machinery Supports, approximately 182,000 lbs.
③ Item No. 320-2B includes all Structural Steel not included in Items Nos. 320-2A, 320-2C and 320-2D, approximately 41,900 lbs.
④ Item No. 320-2C includes all Structural Steel in ladders for Structures B, C and D, approximately 2,380 lbs.
⑤ Item No. 320-2D Structural Steel (Shoe Assemblies) Approximately 10,500 lbs.
⑥ The number of Test Loads may be increased or decreased as directed by the Engineer.

~ GENERAL NOTES ~

DESIGN SPECIFICATIONS: A.A.S.H.O., 1961 '44
LOADING: H20-(15)
PAINT FOR STRUCTURAL STEEL: All Structural Steel shall be painted in accordance with Article 478 of the Specifications. No paint shall be applied to the surfaces of top flanges of beams that are to be covered with concrete. No paint shall be applied to surfaces within two (2) inches of any field weld until after weld is completed.
BOLTS: Bolts shall be in accordance with A.S.T.M. Specification A-307, except High Strength Bolts.
SURFACE FINISH: In addition to those surfaces specified in Article 300.21 of the Specifications, the following Surfaces shall be given Class 1 Surface Finish, the coping around the top of the Bascule Pier, all exterior Surfaces of the Machinery Room and all exposed Surfaces of the End Bents
STRUCTURAL STEEL: All Structural Steel to be welded shall be in accordance with A.S.T.M. Specification A-36 or A-373.

~ INDEX OF BRIDGE SHEETS ~

B- 1 Summary of Estimated Bridge Quantities Structures A, B, C and D.
B- 2 Plan and Elevation Structure "A" over Big Carlos Pass.
B- 3 Plan and Elevation Structure "B"
B- 4 Plan and Elevation Structure "C" over New Pass
B- 5 Plan and Elevation Structure "D" over Big Hickory Pass
B- 6 Plan and Elevation Bascule Span Structure "A"
B- 7 & B-8 Borings and Finish Grade Elevations Structure "A"
B- 9 Borings and Finish Grade Elevations Structure "B"
B-10 Borings and Finish Grade Elevations Structure "C"
B-11 Borings and Finish Grade Elevations Structure "D"
B-12 Typical Details of 18" Square and 20" Square Prestressed Pile, Index 3619.
B-13 Bents 3-W & 16-E Str. "A", 10-N & 10-S Str. "C" and 6-N Str. "D".
B-14 Intermediate Bents for Structures "A", "C" and "D"
B-15 Pier No. 6-W & 3-E for Structure "A"
B-16 Piers 2-W thru 5-W & 2-E for Structure "A"
B-17 Pier 1-W for Structure "A"
B-18 End Bents for Structure "B"
B-19 Intermediate Bents for Structure "B"
B-20 Bents 1-N & 1-S for Structure "C" and 1-N & 1-S for Structure "D"
B-21 Intermediate Bents 2-S thru 5-S Structure "D"
B-22 End Bent No. 6-S for Structure "D"
B-23 48 Ft. Span Superstructure for Structure "A", "C", & "D"
B-24 & B-25 48 Ft. Span Superstructure for Structure "B"
B-26 & B-27 48 Ft. Span Superstructure 4-S and 5-S for Structure "D"
B-28 End Elevations at Bents Nos. 2-S thru 4-S on Structure "D"
B-29 72 Ft. Span Superstructure for Structures "A", "C" & "D"
B-30 Prestressed Beams (Type II-18-10) 48 Ft. Spans for Structures "A", "B", "C" & "D"
B-31 Prestressed Beams (Type III-18-10) for Structures "A", "C" & "D"
B-32 Bearing Shoe Assemblies 72 Ft. Spans Structure "A"
B-33 Concrete Handrail Structures "A" thru "D"
B-34 Guard Rail
B-35 & B-36 Details of Traffic Light and Safety Gate Platforms, Structure "A"
B-37 Structure "A" Steel Flanking Span
B-38 Structure "A" Rest Pier 1-E
B-39 & B-40 Structure "A" Trunnion Pier, General Layout
B-41 & B-42 Structure "A" Trunnion Pier, Reinforcing Details
B-43 Structure "A" Trunnion Pier, Bill of Reinforcing Steel
B-44 Structure "A" Bascule Span, Framing Plan, Girder Geometry and Stress Sheet.
B-45 Structure "A" Bascule Span, Sections and Bracing
B-46 Structure "A" Bascule Span, Main Girder
B-47 Structure "A" Counterweight, General Details
B-48 Structure "A" Bascule Span, Machinery Layout
B-49 Structure "A" Bascule Span, Machinery Supports
B-50 Structure "A" Bascule Span, Trunnion and Related Details
B-51 Structure "A" Lock Assembly and Live Load Shoes
B-52 Structure "A" Buffer Details
B-53 Concrete Control House, Structure "A"
B-54 Elementary Diagram, Structure "A"
B-55 Structure "A" Access Ladders and Platforms
B-56 Structure "A" Details of Fender and Platform
B-57 Fender Details for Structures "B" and "C"
B-58 Fender Details Structure "D"
B-59 Access Ladder Assembly Structure "B"
B-60 Access Ladder Assembly Structure "C"
B-61 Access Ladder Assembly Structure "D"
B-1A Intermediate Bent 3-W for Structure "A"
B-2A Plan and Elevation Proposed Extension Structure "A" over Big Carlos Pass.

SUMMARY OF ESTIMATED BRIDGE QUANTITIES STRUCTURES A, B, C AND D

STATE ROAD DEPARTMENT OF FLORIDA
BRIDGE DIVISION

BRIDGES BETWEEN ESTERO ISLAND AND BONITA BEACH

REVISIONS Date	Description
5-1-61	Quantities Rev. on "A" Revision

ROAD NO.	COUNTY	PROJECT NO.
S-865	LEE	12530-3153

	Name	Date
Detailed by	C.E.S.	2-61
Checked by	R.C.B.	1-63
Quantities by	R.C.B.	1-63
Checked by	R.L.K.	1-63
Traced by	C.E.S.	2-61

APPROVED BY T. W. Jennings
Asst. State Highway Engineer

Quantity Sheet 1 of 60 Total Sheets 7700

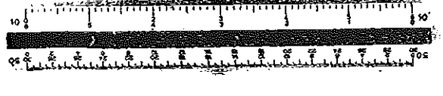

BX1-113

BX1-113

BX1-114

BX1-114

FED. ROAD DIV. No.	STATE	PROJECT NO.	FISCAL YEAR	SHEET NO.
3	FLA.	12530-3153	'61	B-2

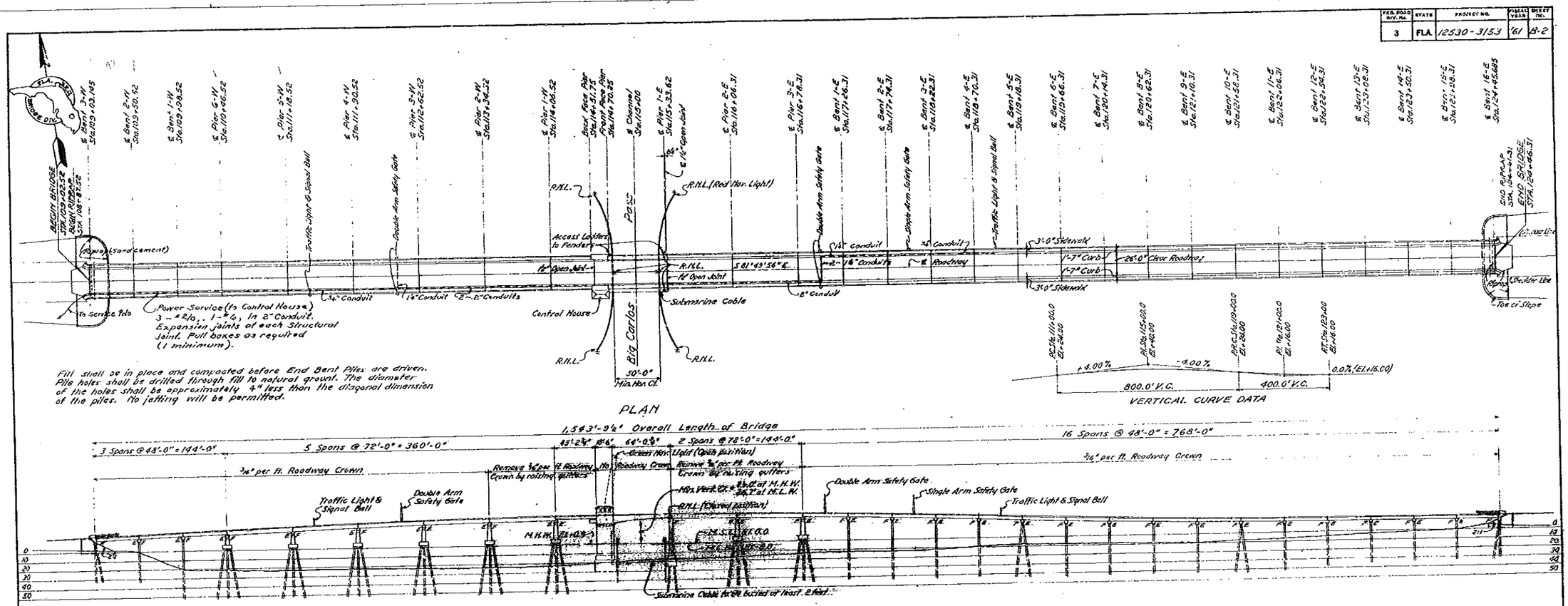

FOR 3-SPAN EXTENSION AT BEGIN BRIDGE SEE SHEET B-2A

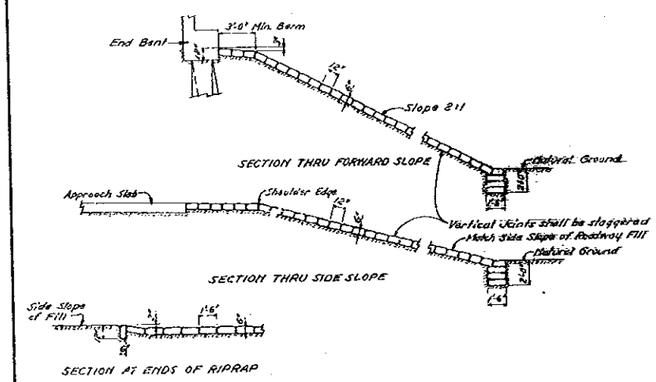

SAND - CEMENT RIPRAP DETAILS

REFERENCE SHEETS

B-1	Summary of Estimated Bridge Quantities Structures "A" thru "D"	B-47	Counterweight - General Details
B-2	Plan and Elevation Structure "A"	B-48	Bascule Span Machinery Layout
B-6	Plan and Elevation Bascule Structure "A"	B-49	Bascule Span Machinery Supports
B-7 & B-8	Bridge and Finish Grade Elevations Structure "A"	B-50	Bascule Span Trunnion and Related Details
B-12	Precast Concrete Piling (20" Prestressed)	B-51	Load Arrangement and Live Load Shoes
B-13	Bents 1-N & 16-S Structure "A" 10-H & B-S Structure "C" and 6-N Structure "D"	B-52	Buffer Details
B-14	Intermediate Bents Structures "A", "B", "C" and "D"	B-53	Concrete Control House
B-15	Piers 6-N & 3-S Structure "A"	B-54	Bascule Span Wiring Diagram
B-16	Piers 5-N thru 2-N & 2-S Structure "A"	B-55	Rest Pier Access Ladder and Platform
B-17	Pier 1-N Structure "A"	B-56	Fender Details Structure "A"
B-23	48 ft. Span Superstructure Structures "A", "C" and "D"		
B-29	72 ft. Span Superstructure Structures "A", "C" and "D"		
B-30	Prestressed Beams (Type II-18-10) Structures "A" thru "D"		
B-31	Prestressed Beams (Type III-(24)) Structures "A", "C" and "D"		
B-32	Bearing Shoe Assemblies 72 ft. Span Structure "A"		
B-33	Handrail		
B-34	Guardrail		
B-35	Precast Units for Curb and Gutter and Handrail Spacing 48 ft. Span Structure "A"		
B-36	Precast Units for Curb and Gutter and Handrail Spacing 72 ft. Span Structure "A"		
B-37	Steel Railing Joint		
B-38	Rail Post Detail		
B-39 & B-40	Transition Pier General Layout		
A-41 & B-42	Transition Pier Reinforcing Steel		
B-43	Transition Pier Bill of Reinforcing Steel		
B-44	Bascule Span Framing Plan, Girder Geometry and Stress Sheet		
B-45	Bascule Span Sections and Bar Bending		
B-46	Bascule Span - Main Girder		

PLAN AND ELEVATION
STRUCTURE "A"
OVER BIG CARLOS PASS

STATE ROAD DEPARTMENT OF FLORIDA
BRIDGE DIVISION

BRIDGES BETWEEN ESTERO ISLAND AND BONITA BEACH

REVISIONS		ROAD NO.	COUNTY	PROJECT NO.
Date	Description	S-865	LEE	12530-3153
1/64	Bent removed from Bents 1-N and 16-S, depth increased, Sheet quantities revised.		Passed Date	APPROVED BY
		Detailed by	C.M.S. 1-61	T.W.S.
		Checked by	R.C.B. 3-61	
		Quantities by		Designed by W.C.H.
		Checked by		Drawn by T.C.P.
		Traced by	C.M.S. 3-61	Checked by 2 of 60 T.W.S.

BX1-114

BX1-115
BX1-115

FED. ROAD DIV. NO.	STATE	PROJECT NO.	FISCAL YEAR	SHEET NO.
3	FLA.		'64	8-2A

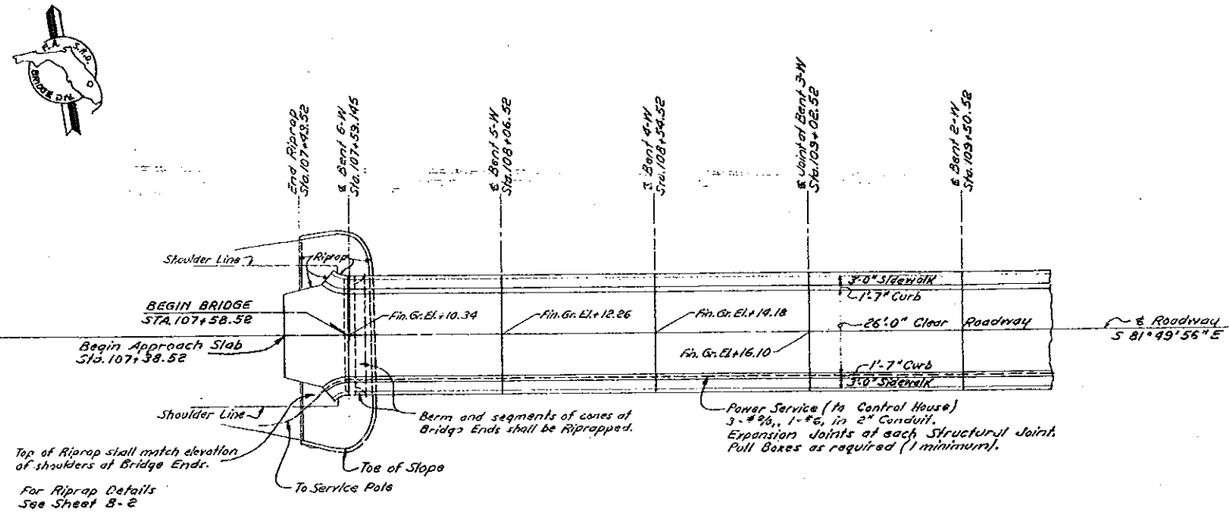

Fill shall be in place and compacted before End Bent Piles are driven. Pile holes shall be drilled through fill to natural ground. The diameter of the holes shall be approximately 4" less than the diagonal dimension of the piles. No jetting will be permitted.

PLAN

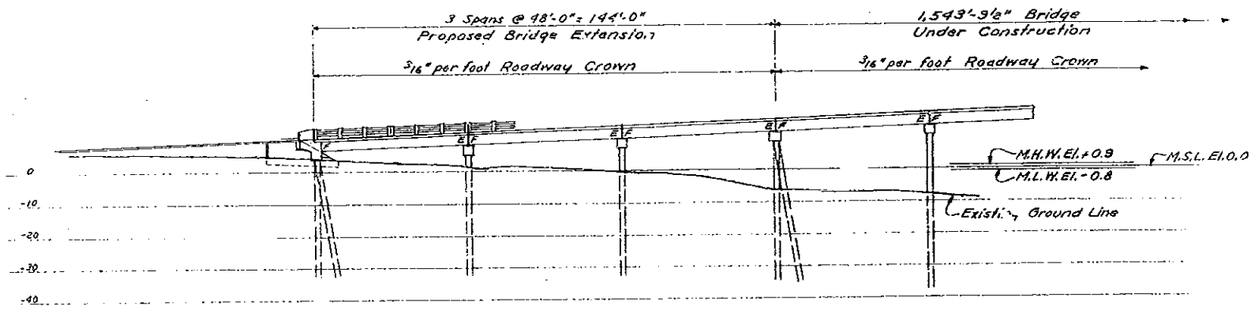

ELEVATION

PLAN AND ELEVATION
PROPOSED EXTENSION
STRUCTURE "A"
OVER BIG CARLOS PASS

STATE ROAD DEPARTMENT OF FLORIDA
BRIDGE DIVISION

BRIDGES BETWEEN ESTERO ISLAND AND BONITA BEACH

REVISIONS Date	Description

ROAD NO.	COUNTY	PROJECT NO.
S-865	LEE	12530-3153

	Name	Date
Detailed by	C.E.S.	1-64
Checked by		
Quantities by		
Checked by		
Traced by	C.E.S.	1-64

APPROVED BY

Assistant State Highway Engineer

Drawing No. 1 of 2

Index No. 8330

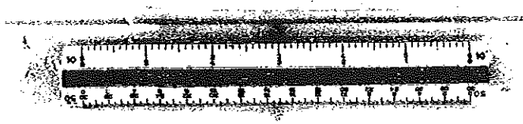

BX1-116
BX1-116

FED. ROAD DIV. NO.	STATE	PROJECT NO.	FISCAL YEAR	SHEET NO.
3	FLA	12530-3157	'61	B-6

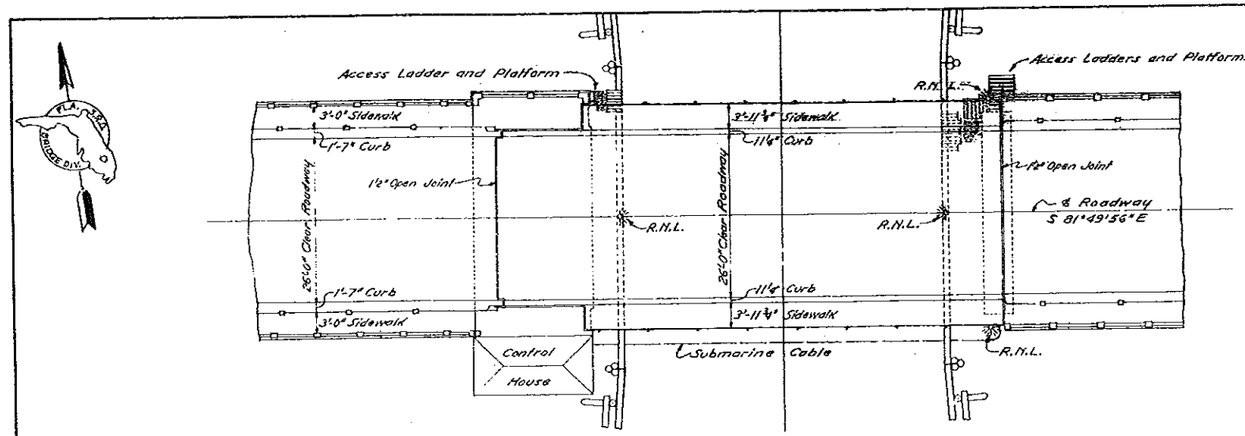

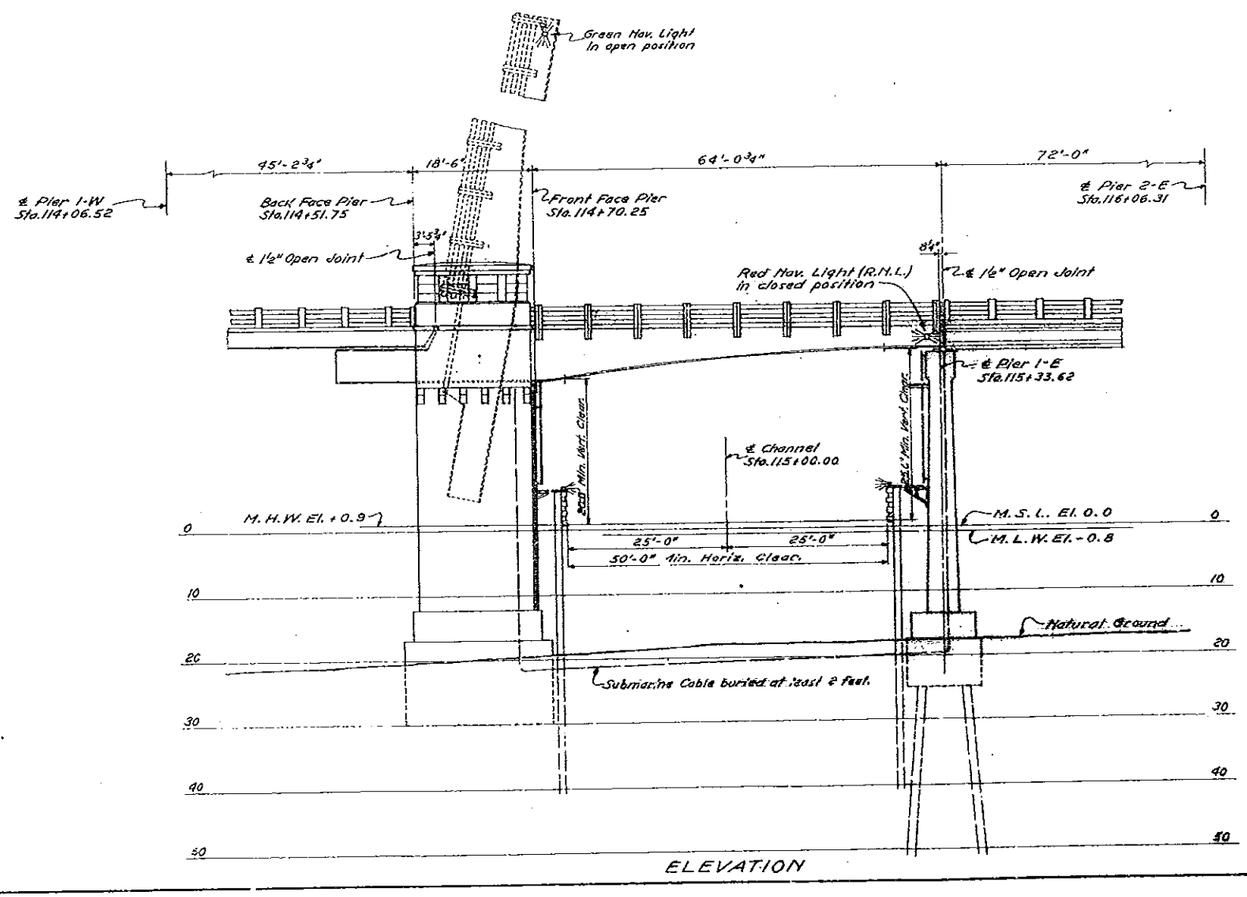

PLAN AND ELEVATION BASCULE SPAN
STRUCTURE "A"

STATE ROAD DEPARTMENT OF FLORIDA
BRIDGE DIVISION

BRIDGES BETWEEN ESTERO ISLAND AND BONITA BEACH

REVISIONS		ROAD NO.	COUNTY		PROJECT NO.
Date	Description	S-865	LEE		12530-3153
1/64	Piles Removed Seal depth increased		Names	Dates	APPROVED BY
		Detailed by	C.E.S.	1-61	
		Checked by	R.E.H.	1-61	T.W. Jimmerson
		Quantities by			Assistant State Highway Engr.
		Checked by			Drawing No. 6 of 60
		Traced by	C.E.S.	1-61	Index No. 7700

BX1-116
BX1-116

BX1-117

FED. ROAD DIV. NO.	STATE	PROJECT NO.	FISCAL YEAR	SHEET NO.
3	FLA.	12530-3153	'61	B-7

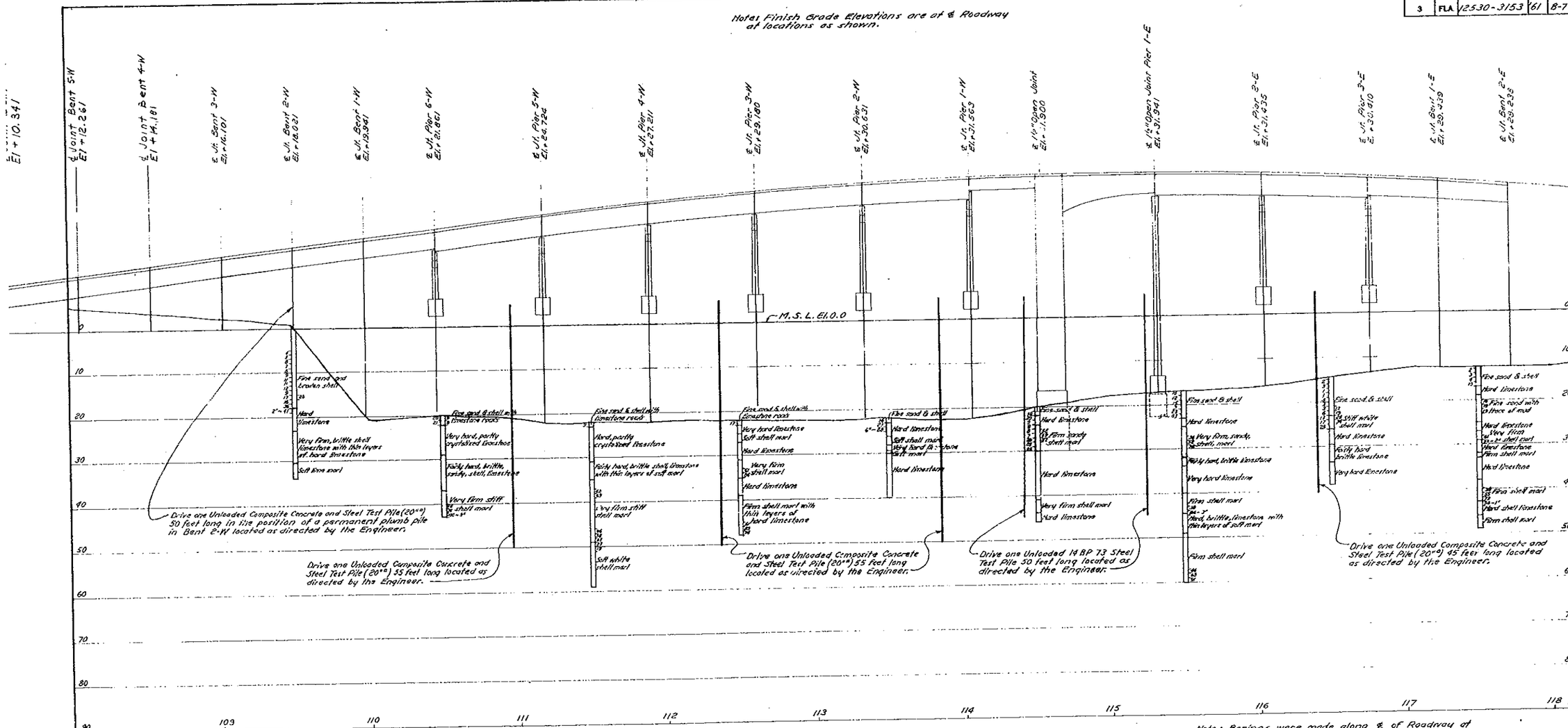

Note: Numbers at left of Boring Columns are blows per foot* on the Casing. Numbers at right of Boring Columns are blows per foot* on the Spoon.
* unless shown as being in inches.

Note: Borings were made along ℄ of Roadway at locations shown.

TYPE OF RIG ~ SULLIVAN HD-22

	CASING	SPOON
Inside Diameter	2.5"	1.5"
Outside Diameter	2.9"	2.0"
Weight of Hammer	490 Lbs.	140 Lbs.
Average Drop of Hammer	24"	30"

BORINGS AND FINISH GRADE ELEVATIONS
STRUCTURE "A"

STATE ROAD DEPARTMENT OF FLORIDA
BRIDGE DIVISION

BRIDGES BETWEEN ESTERO ISLAND AND BONITA BEACH

REVISIONS		ROAD NO.	COUNTY	PROJECT NO.
Date	Descriptions	S-865	LEE	12530-3153
1-64	Three 48' Spans added.			

	Names	Dates
Detailed by	C. E. S.	1-61
Checked by	R. C. B.	2-61
Quantities by		
Checked by		
Traced by	C. E. S.	1-61

APPROVED BY
T. W. Jenning
Assistant State Highway Engineer

Drawing No. 7 of 60 | Index No. 7700

BX1-117

BX1-118

BX1-118

FED. ROAD DIV. NO.	STATE	PROJECT NO.	FISCAL YEAR	SHEET NO.
3	FLA.	12530-3153	61	B-8

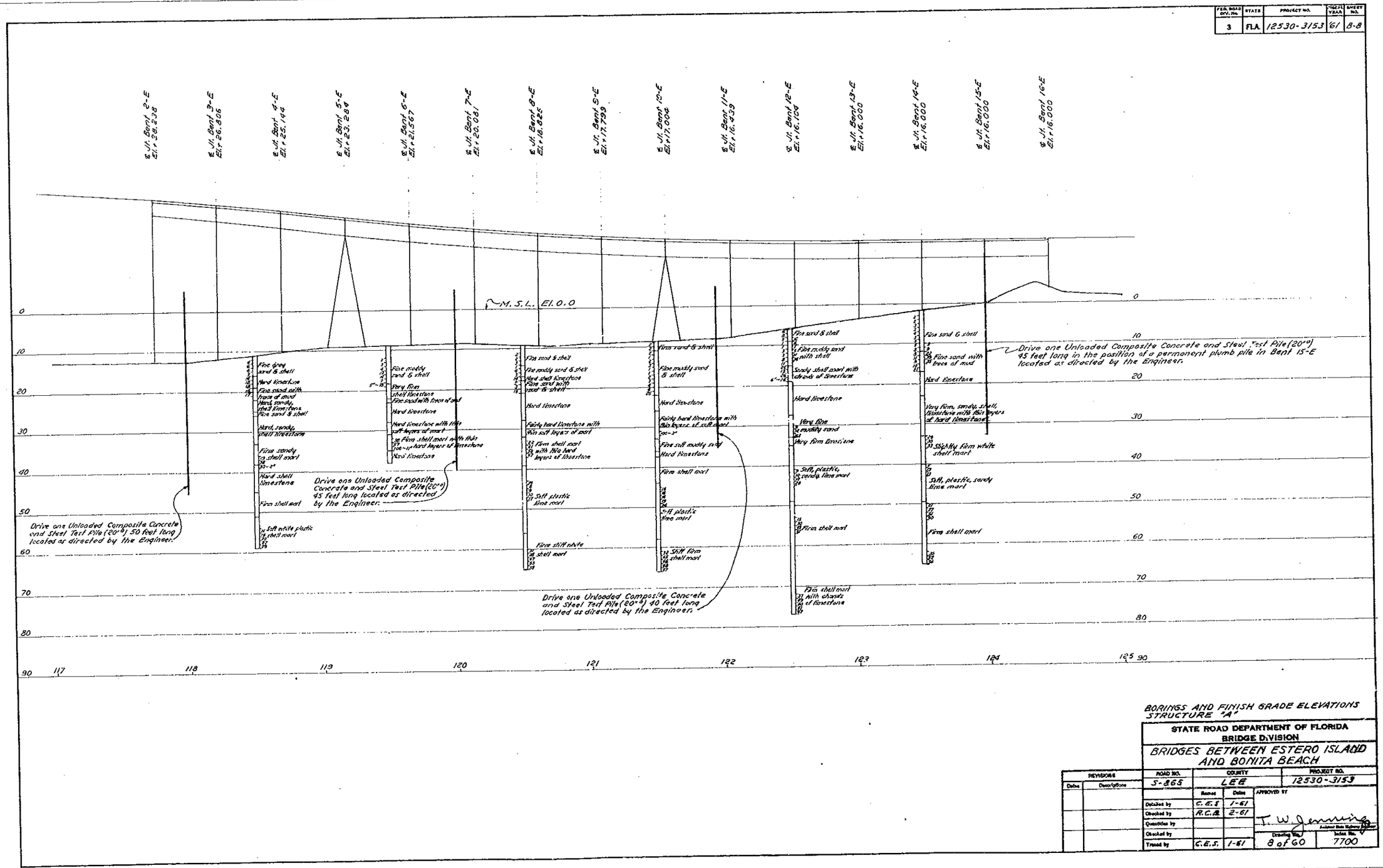

BORINGS AND FINISH GRADE ELEVATIONS
STRUCTURE "A"

STATE ROAD DEPARTMENT OF FLORIDA
BRIDGE DIVISION

BRIDGES BETWEEN ESTERO ISLAND AND BONITA BEACH

REVISIONS		ROAD NO.	COUNTY	PROJECT NO.
Date	Description	S-865	LEE	12530-3153

	Name	Date
Detailed by	C.E.S.	1-61
Checked by	R.C.A.	2-61
Quantities by		
Checked by		
Traced by	C.E.S.	1-61

APPROVED BY: T. W. Jennings, Assistant State Highway Engineer

Drawing No. 8 of 60

Index No. 7700

BX1-118

BX1-119

BX1-119

FED. ROAD DIV. NO.	STATE	PROJECT NO.	FISCAL YEAR	SHEET NO.
3	FLA	12530-3153	61	B-14

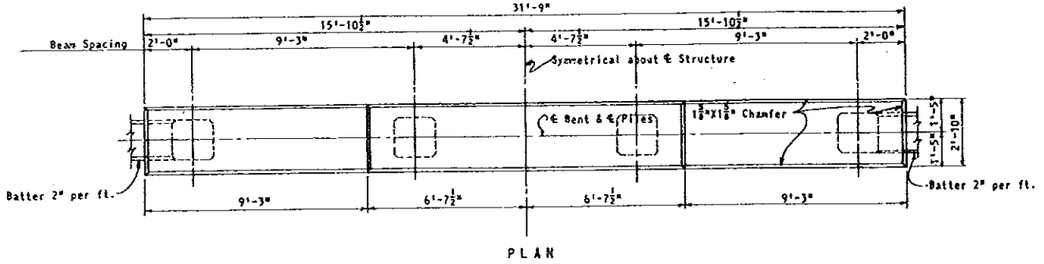

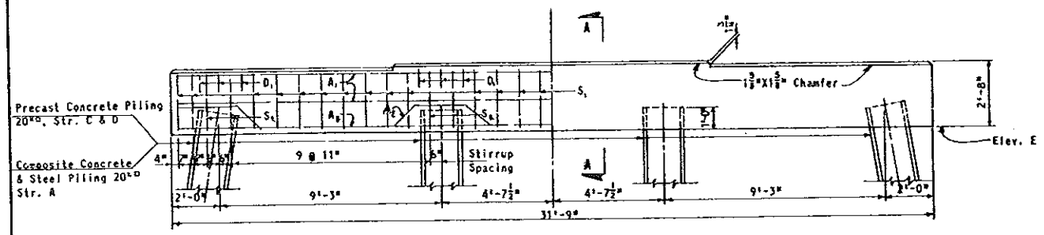

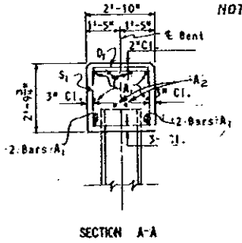

TABLE OF ELEVATIONS "E"

STRUCTURE "A" BENT	STRUCTURE "A" ELEV. "E"	STRUCTURE "C" BENT	STRUCTURE "C" ELEV. "E"	STRUCTURE "D" BENT	STRUCTURE "D" ELEV. "E"
2-W	11.401	9-N & S	18.380	5-N	6.781
1-W	13.321	8-N & S	20.731	4-N	7.760
1-E	22.819	7-N & S	22.619	3-N	8.509
2-E	21.618	6-N & S	24.619	2-N	9.027
3-E	20.186	5-N & S	26.131		
4-E	18.524	4-N & S	27.355		
5-E	16.664	3-N & S	28.291		
6-E	14.947	2-N & S	28.939		
7-E	13.461				
8-E	12.205				
9-E	11.179				
10-E	10.384				
11-E	9.819				
12-E	9.484				
13-E	9.380				
14-E	9.380				
15-E	9.380				
4-W	7.861				
5-W	5.691				

NOTE: Bent 3-W Structure "A" is not included. For Details of Bent 3-W See Sheet No. B-14A.

BILL OF REINFORCING STEEL *

MARK	SIZE	NO. REQUIRED TYPE A	NO. REQUIRED TYPE B	LENGTH
A_1	8	10	—	31'- 3"
A_2	8	2	—	33'-11"
D_1	4	12	—	3'-10"
D_2	4	—	12	4'- 2"
S_1	4	28	—	9'-10"
S_2	4	8	—	7'- 4"
S_3	4	—	34	10'-0"
S_4	4	—	12	7'-8"
A_3	10	—	10	31'- 3"
C	6	—	2	31'- 3"

BENDING DIAGRAMS

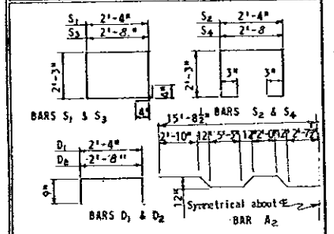

NOTE: All bar dimensions are out-to-out.

ESTIMATED QUANTITIES *

ITEM	UNIT	QUANTITY TYPE A	QUANTITY TYPE B
Class A Concrete (Approach Spans)	Cu.Yd.	8.68	9.54
Reinforcing Steel	Lb.	1270	1772
Precast Concrete Piling (20"ø)	Lin.Ft.	#	#
Composite Concrete & Steel Piling (20"ø)	Lin.Ft.	*	*

Structure C & D
Structure A

\# See Estimated Bridge Quantities.
* Bill of Reinforcing Steel and Estimated Quantities are for One Bent only.

NOTE: For Location of Intermediate Tower Bents, (Type B) See Sheet No. B-2 & B-4.

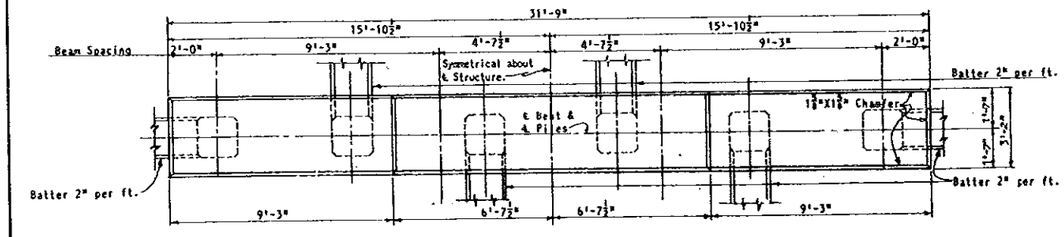

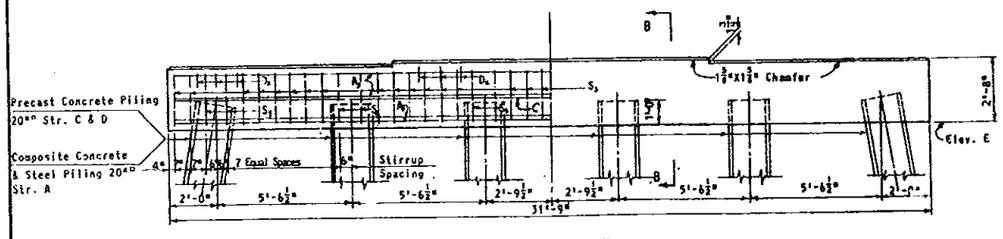

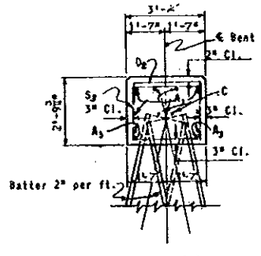

GENERAL NOTES

DESIGN LOAD FOR PILES: 55 Tons.
DOWELS AND ANCHOR BOLTS: Set . Anchor Bolts shown on Superstructure Drawings.
BEARING SURFACES: All bearing surfaces on top of substructure caps for Prestressed Beams seated on 1" pads shall be finished to a plane parallel to the beam slope.

INTERMEDIATE BENTS FOR STRUCTURE "A" "C" & "D"

STATE ROAD DEPARTMENT OF FLORIDA
BRIDGE DIVISION

BRIDGES BETWEEN ESTERO ISLAND AND BONITA BEACH

REVISIONS Date	REVISIONS Description
1-64	Beats 4-W 15-W Added.

ROAD NO.	COUNTY	PROJECT NO.
S-865	LEE	12530-3153

	Names	Dates
Detailed by	J.J.M.	4-60
Checked by	R.C.B.	5-60
Quantities by	J.J.M.	5-60
Checked by	R.C.B.	5-60
Traced by	J.J.M.	4-60

APPROVED BY

Engineer Director of Design

Drawing No. 13 of 60

Index No. 7700

14

BX1-119

BX1-120

FED. ROAD DIV. NO.	STATE	PROJECT NO.	FISCAL YEAR	SHEET NO.
3	FLA.		64	B-14A

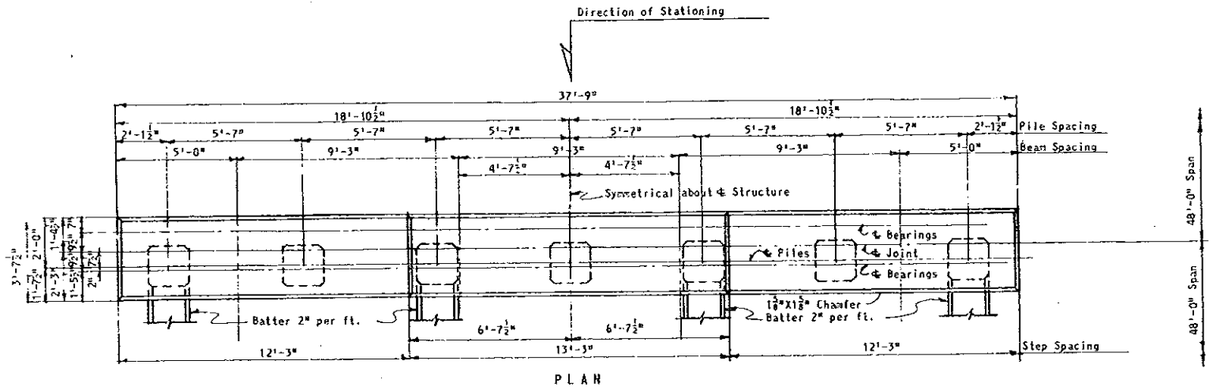

PLAN

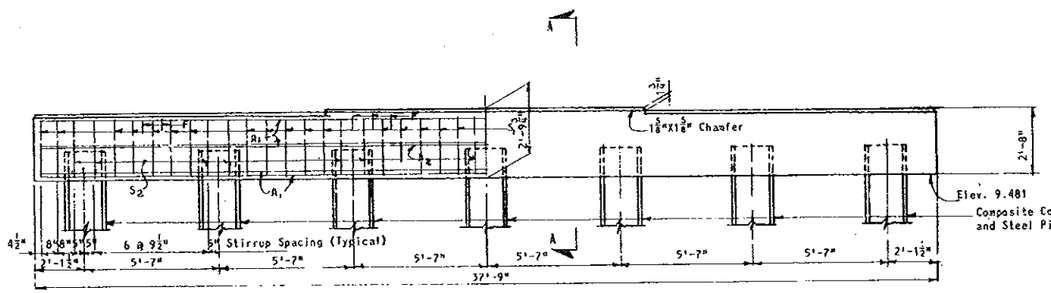

ELEVATION

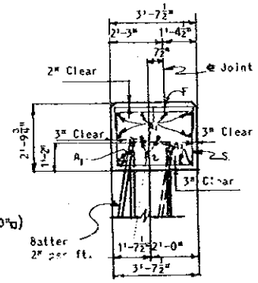

SECTION A-A

BILL OF REINFORCING STEEL

MARK	SIZE	NO. REQ'D.	LENGTH
A1	8	10	37'- 3"
A2	6	2	37'- 3"
F	4	10	3'- 11"
S1	4	34	11'- 5"
S2	4	14	8'- 8"

BENDING DIAGRAMS

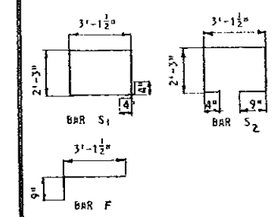

NOTE: All bar dimensions are out-to-out.

ESTIMATED QUANTITIES

ITEM	UNIT	QUANTITY
Class A Concrete (Approach Spans)	Cu. Yd.	12.93
Reinforcing Steel	Lb.	1473
Precast Concrete and Steel Piling (20"□)	Lin.Ft.	*

* See Estimated Bridge Quantities.

GENERAL NOTES

DESIGN SPECIFICATIONS: A.A.S.H.O., 1961
LOADING: H20-44
DESIGN LOAD FOR PILES: 45 Tons
DOWELS: Set Anchor Bolts shown on Superstructure Drawings.
BEARING SURFACES: All bearing surfaces on top of Substructure Caps for prestressed beams seated on 1" pads shall be finished to a plane parallel to the beam slope.

INTERMEDIATE BENT 3 W FOR STRUCTURE "A"

STATE ROAD DEPARTMENT OF FLORIDA
BRIDGE DIVISION

BRIDGES BETWEEN ESTERO ISLAND AND BONITA BEACH

REVISIONS		ROAD NO.	COUNTY	PROJECT NO.
Dates	Descriptions	S-865	LEE	12530-3153

	Name	Date	APPROVED BY
Detailed by	AGM	1-64	
Checked by	R.C.B.	1-64	
Quantities by	AGM	1-64	Assistant State Highway Engineer
Checked by	R.C.B.	1-64	
Traced by	AGM	1-64	Drawing No. 2 of 2 — Index No. 8330

BX1-120

BX1-121

BX1-121

FED. ROAD DIV. No.	STATE	PROJECT NO.	FISCAL YEAR	SHEET NO.
3	FLA.	12530-3153	61	B-15

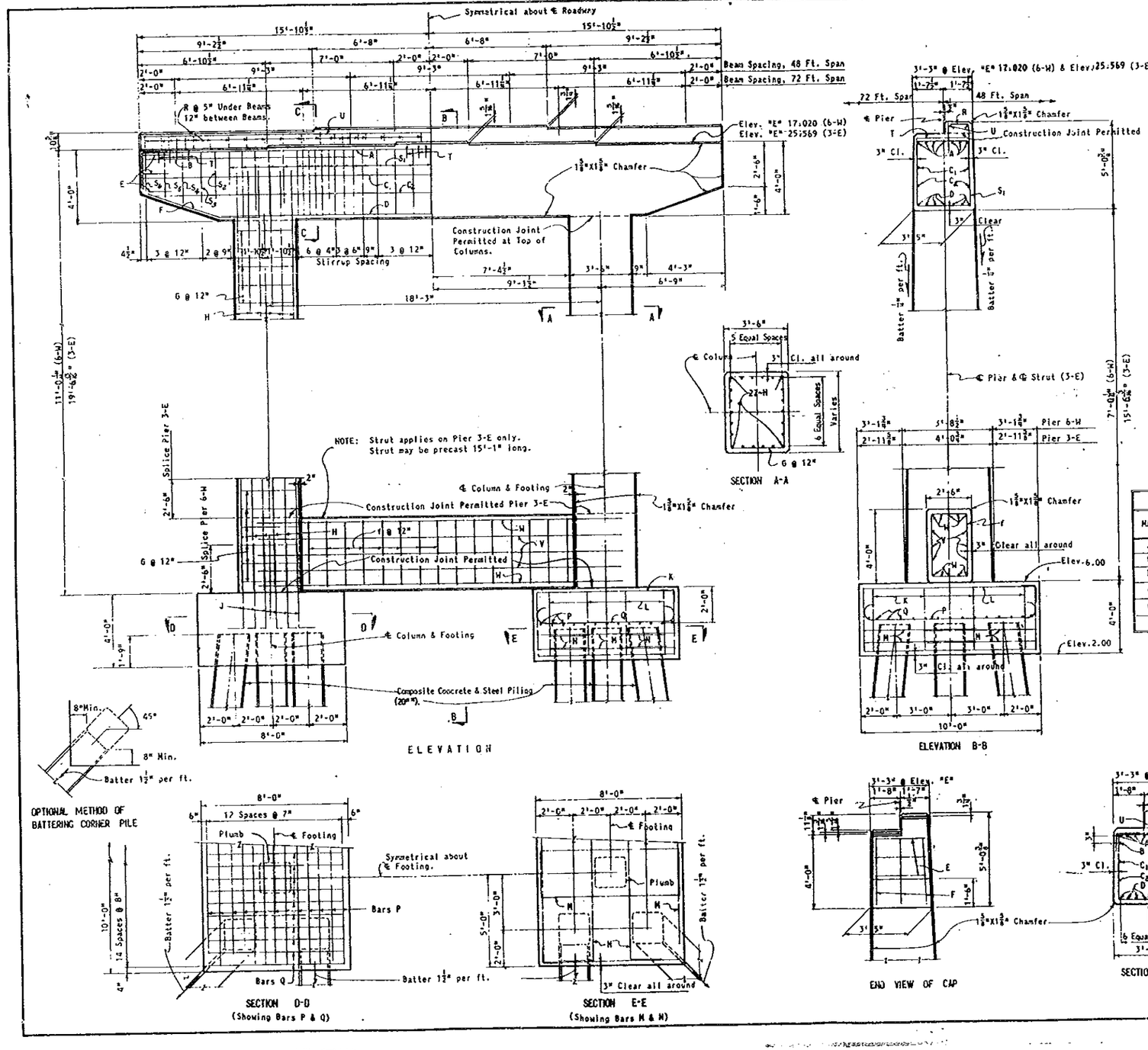

BILL OF CONSTANT REINFORCING STEEL

MARK	SIZE	NO. REQ'D.	LENGTH
A	10	7	31'- 3"
B	10	4	11'- 6"
C_1	8	2	31'- 3"
C_2	8	2	29'- 9"
D	10	7	22'- 9"
E	6	6	5'- 2"
F	6	6	10'- 4"
K	8	8	22'- 8"
L	8	8	27'- 0"
M	6	8	28'- 0"
N	6	8	12'- 4"
P	9	26	11'- 8"
Q	8	30	9'- 8"
R	4	42	4'- 7"
S_1	5	37	13'- 6"
S_2	5	2	13'- 4"
S_3	5	2	12'-10"
S_4	5	2	12'- 0"
S_5	5	2	11'- 3"
S_6	5	2	10'- 7"
T	4	14	3'- 6"
U	5	2	31'- 3"

BILL OF VARIABLE REINFORCING STEEL

MARK	SIZE	PIER 6-W NO. REQ'D.	PIER 6-W LENGTH	PIER 3-E NO. REQ'D.	PIER 3-E LENGTH
J	8	44	5'-6"	44	9'-6"
G	4	24	Varies	40	Varies
H	8	44	10'-0"	44	14'-6"
V	5			6	20'-0"
W	7			10	20'-0"
r	4			15	11'-8"

BENDING DIAGRAMS

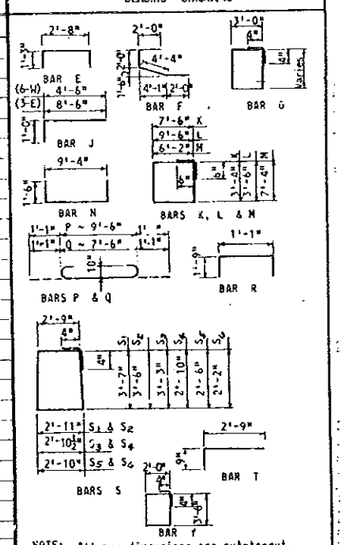

NOTE: All bar dimensions are out-to-out.

ESTIMATED QUANTITIES

ITEM	UNIT	QUANTITY 6-W	QUANTITY 3-E
Class A Concrete (Approach Spans)*	Cu.Yd.	45.15	59.12
Reinforcing Steel	Lb.	8540	16,335
Composite Concrete & Steel Piling (20")	Lin.Ft.	*	*

* See Estimated Bridge Quantities.

GENERAL NOTES

DESIGN LOAD FOR PILES: 55 Tons.
BEARING SURFACES: All bearing surfaces on top of Substructure Caps for Prestressed Beams seated on 1" pads shall be finished to a plane parallel to the beam slope.
Bearing surfaces for all other types shall be finished level.
DOWELS AND ANCHOR BOLTS: Set Anchor Bolts shown on Superstructure Drawings.

PIER NO. 6-W & 3-E FOR STRUCTURE "A"

STATE ROAD DEPARTMENT OF FLORIDA
BRIDGE DIVISION

BRIDGES BETWEEN ESTERO ISLAND AND BONITA BEACH

REVISIONS Dates	Descriptions

ROAD NO.	COUNTY	PROJECT NO.
S-385	LEE	12530-3153

	Names	Dates
Detailed by	E.C.B.	5-60
Traced by	NEP	5-60
Quantities by	E.C.B.	5-60
Checked by	NWB	1-61
Traced by		

APPROVED BY

Assistant State Highway Engineer (Bridges)

Drawing No. 14 of 20 | Index No. 7700

15

BX1-121

BX1-121

BX1-122

BX1-122

FED. ROAD DIV. NO.	STATE	PROJECT NO.	FISCAL YEAR	SHEET NO.
3	FLA.	12530-3153	'63	B-12

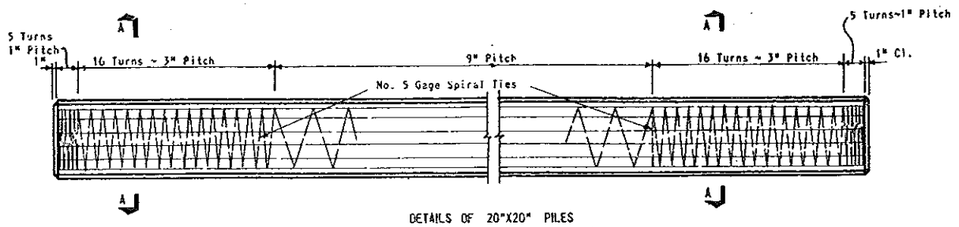

DETAILS OF 20"X20" PILES
Maximum Length~ 75 Ft.~Single Point Pick-up
Maximum Length~107 Ft.~Double Point Pick-up

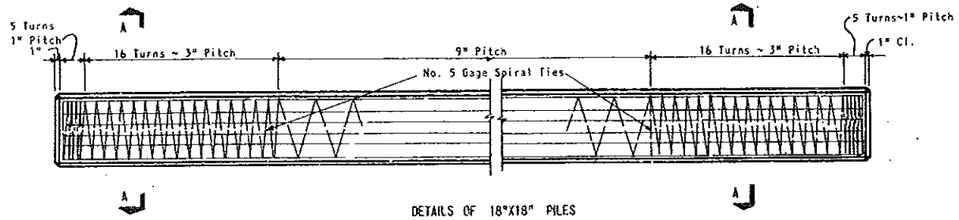

DETAILS OF 18"X18" PILES
Maximum Length~70 Ft.~Single Point Pick-up
Maximum Length~95 Ft.~Double Point Pick-up

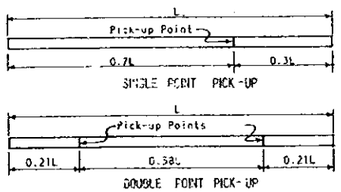

SINGLE POINT PICK-UP

DOUBLE POINT PICK-UP

NOTE: Piles shall be marked at Pick-up Points to indicate proper points for attaching handling lines.

DETAILS OF PRESTRESSED CONCRETE PILES

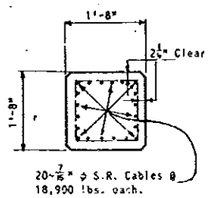

SECTION A-A

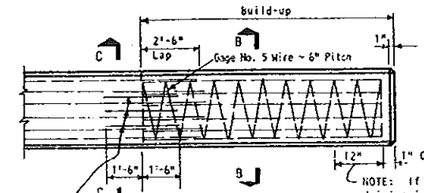

PILE BUILD-UP

NOTE: If additional driving is required, 2" pitch shall be used for spiral wire within these limits.

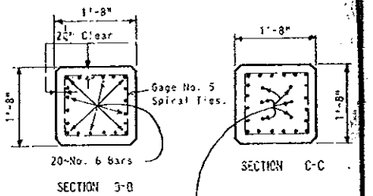

SECTION B-B

SECTION C-C

Provide 6-#10 Dowels
3'-0" long

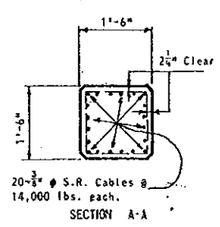

SECTION A-A

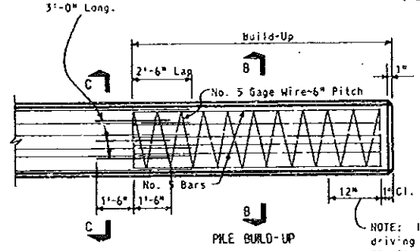

PILE BUILD-UP

NOTE: If additional driving is required, 2" pitch shall be used for spiral wire within these limits.

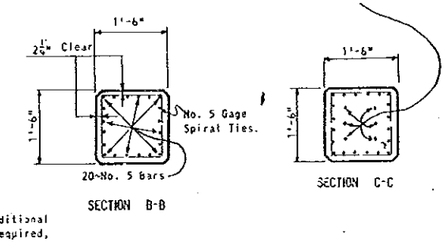

SECTION B-B

SECTION C-C

NOTE: All build-ups shall be made with Class P Concrete.

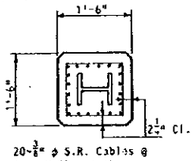

SECTION A-A

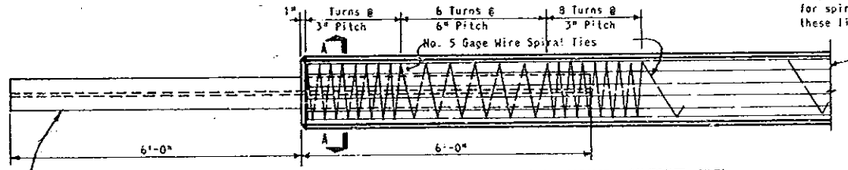

DETAILS OF 18"X18" COMPOSITE PILES

Details above this point similar to those shown for standard 18"□ Prestressed Pile.

8 BP 36 or Built-up Section (8"X8") having flange plates ½" min. thickness and a web plate ½" min. thickness or 2~90 lb. per yard Rails welded back to back.

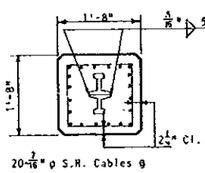

SECTION A-A

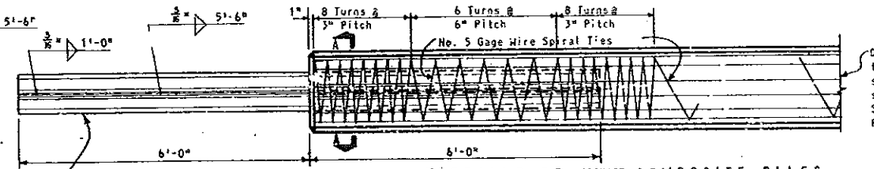

DETAILS OF 20"X20" COMPOSITE PILES

Details above this point similar to those shown for Standard 20"□ Prestressed Pile.

NOTE: Two ~ 90 lb. per yard or heavier Rails welded base to base or 10 WF 89. Salvaged Rails may be used.

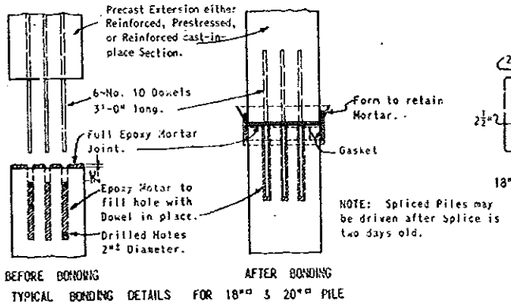

TYPICAL BONDING DETAILS FOR 18"□ & 20"□ PILE

ALTERNATE EPOXY BONDED SPLICE

NOTE: Spliced Piles may be driven after splice is two days old.

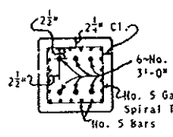

18"□ & 20"□ PILES

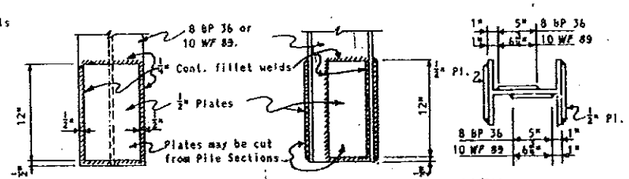

DETAILS OF REINFORCED PILE TIPS

NOTE: Reinforced Pile Tips required only when shown on the Plans or ordered by the Engineer. Each Authorized Reinforced Tip shall be paid for as four additional feet of Composite Concrete and Steel Pile furnished.

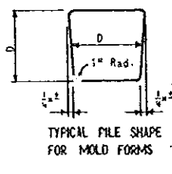

TYPICAL PILE SHAPE FOR MOLD FORMS

GENERAL NOTES

SPIRAL TIES: Each wrap of spiral shall be tied to at least two corner Cables.

MATERIAL FOR SPIRAL TIES: Spirals may be manufactured from stock meeting requirements of any grade of reinforcing steel or hard drawn wire.

PILE CUTOFFS: In cutting of Concrete Piles an abrasive saw shall be used to score the Concrete at cut off Elevation to the approximate depth of Reinforcing Steel. As an alternate to sawing, scoring may be done with a templated power drill.

OCTAGONAL PILES: Prestressed Octagonal Piles of equivalent strength may be substituted for square piles. Details of pile shall be submitted to the Engineer for Approval.

STATE ROAD DEPARTMENT OF FLORIDA
BRIDGE DIVISION
TYPICAL DETAILS OF 18" SQUARE AND 20" SQUARE PRESTRESSED PILES

REVISIONS		ROAD NO.	COUNTY		PROJECT NO.
Date	Description	S-865	LEE		12530-3153
			Names	Date	APPROVED BY
		Detailed by	C.T.F.	11-61	
		Checked by	J.L.W.	11-61	T. W. Jennings
		Quantities by			Assistant State Bridge Engineer
		Checked by			Drawing No. 141
		Traced by	C.T.F.	11-61	Bridge No. 3619

BX1-122

BX1-123
BX1-123

FED. ROAD DIV. NO.	STATE	PROJECT NO.	FISCAL YEAR	SHEET NO.
3	FLA.	12530-3153	61	B-13

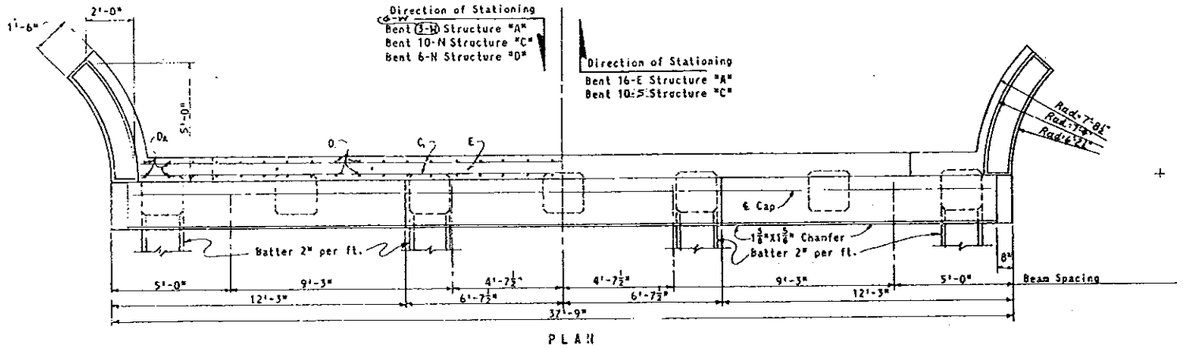

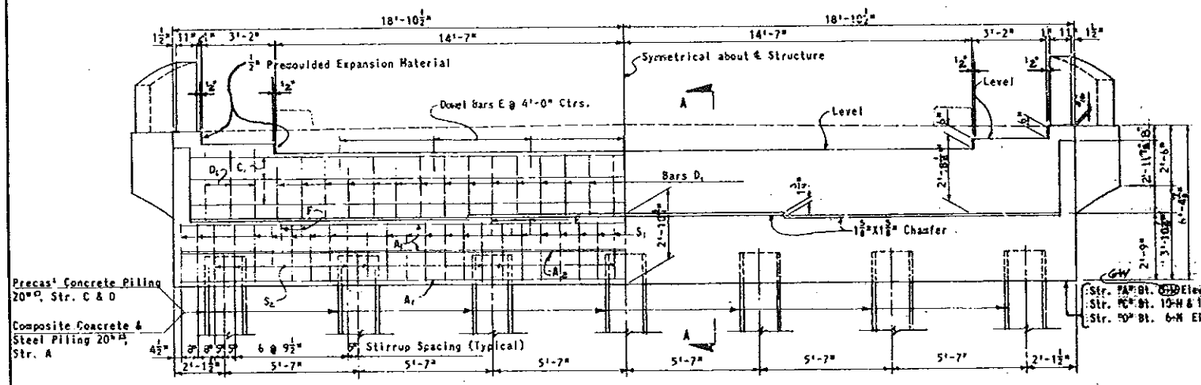

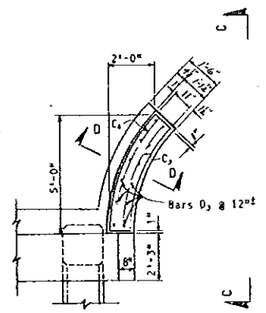

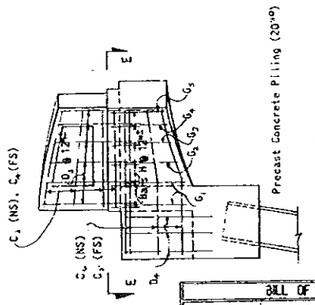

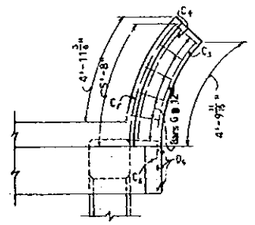

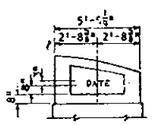

The date shall be placed on the South West End Post at Begin Bridge and on the North East End Post at End Bridge on Structures "A". On Structure "C" & "D", the date shall placed on the West End Post at Begin Bridge and the East End Post at End Bridge. The "Date" shall be the year the Bridge is constructed.

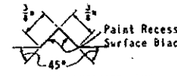

NOTE: Blacktop Traffic Letters 3" in height as approved by the Engineer may be used instead of the letters formed by V grooves.

BILL OF REINFORCING STEEL

MARK	SIZE	NO. REQ'D.	LENGTH
A	8	10	37'- 3"
A_2	6	2	37'- 3"
C	4	6	37'- 3"
C_3	4	8	4'- 7"
C_4	4	10	5'- 0"
C_7	6	8	7'- 0"
C_8	6	8	6'- 7"
D	4	60	3'- 5"
D_2	4	12	3'-11"
D_3	4	24	4'- 0"
D_4	4	6	3'-10"
E	6	7	1'- 6"
F	4	10	3'- 3"
G_1	4	4	8'- 2"
G_3	4	2	7'- 8"
G_4	4	2	7'- 2"
G_5	4	2	6'- 8"
G_7	4	2	6'- 4"
H	4	12	2'- 9"
S_1	4	36	10'-10"
S_2	4	14	8'- 1"

BENDING DIAGRAMS

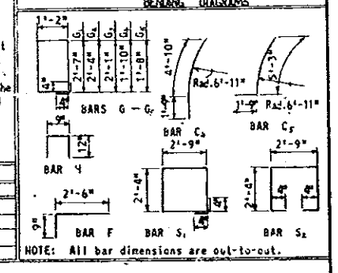

NOTE: All bar dimensions are out-to-out.

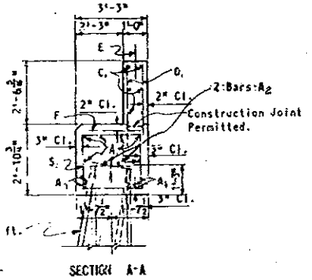

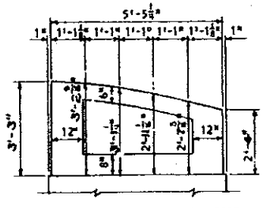

NOTE: Quantities for the Handrail Post are included in the Estimated Quantities for the End Bent.

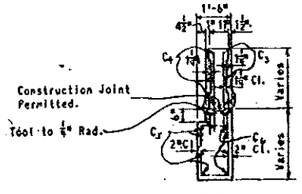

ESTIMATED QUANTITIES **

ITEM	UNIT	QUANTITY
Class A Concrete (Approach Spans)	Cu. Yd.	18.90
Reinforcing Steel	Lb.	2165
Precast Concrete Piling (20"□)	Lin. Ft.	*
Composite Concrete & Steel Piling (20"□)	Lin. Ft.	*

Structures C & D
Structure A

* See Estimated Bridge Quantities.
** Quantities shown are for one bent only.

BENTS (G-W) & 16-E STRUCTURE "A"
BENTS 10-N & 10-S STRUCTURE "C"
BENTS 6-N STRUCTURE "D"

GENERAL NOTES

DESIGN SPECIFICATIONS: A.A.S.H.O., 1961.
LOADING: H20-44.
DESIGN LOAD FOR PILES: 45 Tons
DOWELS: 1 Set Anchor Bolts shown on Superstructure Drawings.

BEARING SURFACES: All bearing surfaces on top of substructure caps for prestressed beams seated on 1" pads shall be finished to a plane parallel to the beam slope.

STATE ROAD DEPARTMENT OF FLORIDA
BRIDGE DIVISION

BRIDGES BETWEEN ESTERO ISLAND AND BONITA BEACH

REVISIONS Date	Description
1-64	Revised Bill of Reinforcing Steel

ROAD NO.	COUNTY	PROJECT NO.
S-865	LEE	12530-3153

	Name	Date
Detailed by	J.J.M.	5-60
Checked by	R.C.B.	6-60
Quantities by	J.J.M.	5-60
Graphed by	R.C.B.	6-60
Traced by	J.J.M.	5-60

APPROVED BY: T. W. Jennings
Director of Bridges
Date: 12 of 60
Sheet No. 7700

BX1-124
BX1-124

FED. ROAD DIV. No.	STATE	PROJECT No.	FISCAL YEAR	SHEET NO.
9	FLA.	12530-3153	64-65	13-16

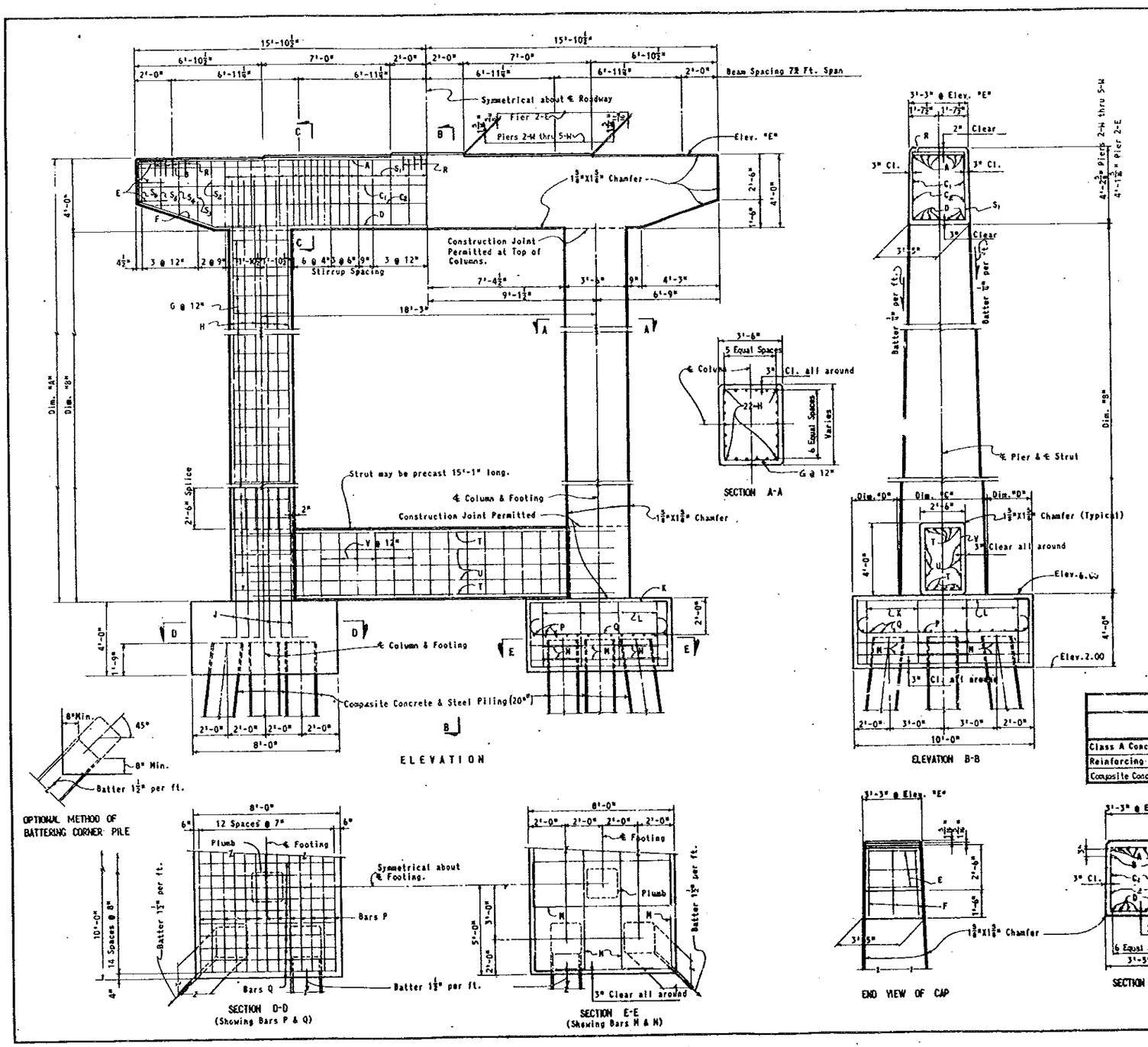

BILL OF CONSTANT REINFORCING STEEL

MARK	SIZE	NO. REQ'D.	LENGTH
A	10	7	31'- 3"
B	10	4	11'- 6"
C_1	8	2	31'- 3"
C_2	8	2	29'- 9"
D	10	7	22'- 9"
E	6	6	5'- 2"
F	6	6	10'- 4"
G	4	See Table	Varies
H	8	44	See Table
J	8	44	9'- 6"
K	8	8	22'- 8"
L	8	6	27'- 0"
M	6	8	28'- 0"
N	6	8	12'- 4"
P	9	26	11'- 8"
Q	8	30	9'- 8"
R	4	14	4'- 3"
S_1	5	37	13'- 6"
S_2	5	2	13'- 4"
S_3	5	2	12'-10"
S_4	5	2	12'- 0"
S_5	5	2	11'- 3"
S_6	5	2	10'- 7"
T	7	10	20'- 0"
U	5	6	20'- 0"
V	4	15	11'- 8"

BENDING DIAGRAMS

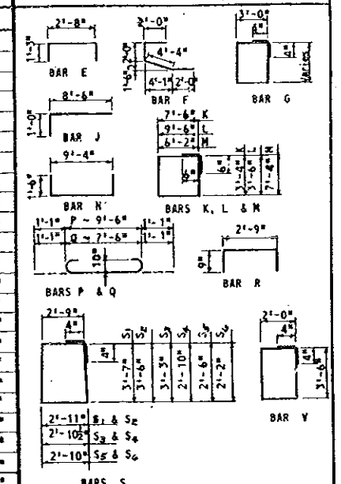

NOTE: All bar dimensions are out-to-out.

BILL OF VARIABLE REINFORCING STEEL

ITEM	2-W	3-W	4-W	5-W	2-E
6 Bars Req'd.	32	30	26	20	34
H Bar Length	14'-10"	13'-4"	11'-5"	8'-10"	15'-9"

BILL OF VARIABLE DIMENSIONS

ITEM	2-W	3-W	4-W	5-W	2-E
Dim. "A"	19'-9⅜"	18'-4⅛"	16'-4⅝"	13'-10⅝"	20'-8⅝"
" "B"	15'-9⅜"	14'-4⅛"	12'-4⅝"	9'-10⅝"	16'-8⅝"
" "C"	4'-0½"	4'-0⅛"	3'-11⅜"	3'-10"	4'-1⅜"
" "D"	2'-11⅜"	2'-11⅛"	3'-0⅝"	3'-1"	2'-11⅜"
Elev."E"	25.789	24.339	22.370	19.883	26.707

ESTIMATED QUANTITIES

ITEM	UNIT	QUANTITY						
		2-W	3-W	4-W	5-W	2-E		
Class A Concrete (Approach:Spans)	Cu. Yd.	57.86	56.36	54.33	51.82	58.70		
Reinforcing Steel	Lb.	10,178	9,923	9,662	9,385	10,244		
Composite Concrete & Steel Piling (20"ø)	Lin. Ft.	*	*	*	*	*	*	*

* See Estimated Bridge Quantities.

NOTE: 8113 of Reinforcing Steel and Estimated Quantities are for One Pier only.

NOTE: For General Notes see Sheet No. B-15.

PIERS 2-W THRU 5-W & 2-E FOR STRUCTURE "A"

STATE ROAD DEPARTMENT OF FLORIDA
BRIDGE DIVISION

BRIDGES BETWEEN ESTERO ISLAND AND BONITA BEACH

REVISIONS	
Date	Description

ROAD NO.	COUNTY	PROJECT NO.
S-865	LEE	12530-3153

	Name	Date
Detailed by	R.C.B.	5-60
Checked by	M.E.F.	6-60
Quantities by	R.C.B.	5-60
Checked by	NWB	1-61
Traced by		

APPROVED BY

Assistant State Highway Engineer

Drawing No. 15 of 60

Index No. 7700

BX1-125

FED. ROAD DIV. NO.	STATE	PROJECT NO.	FISCAL YEAR	SHEET NO.
3	FLA	12530-3153	61	B-17

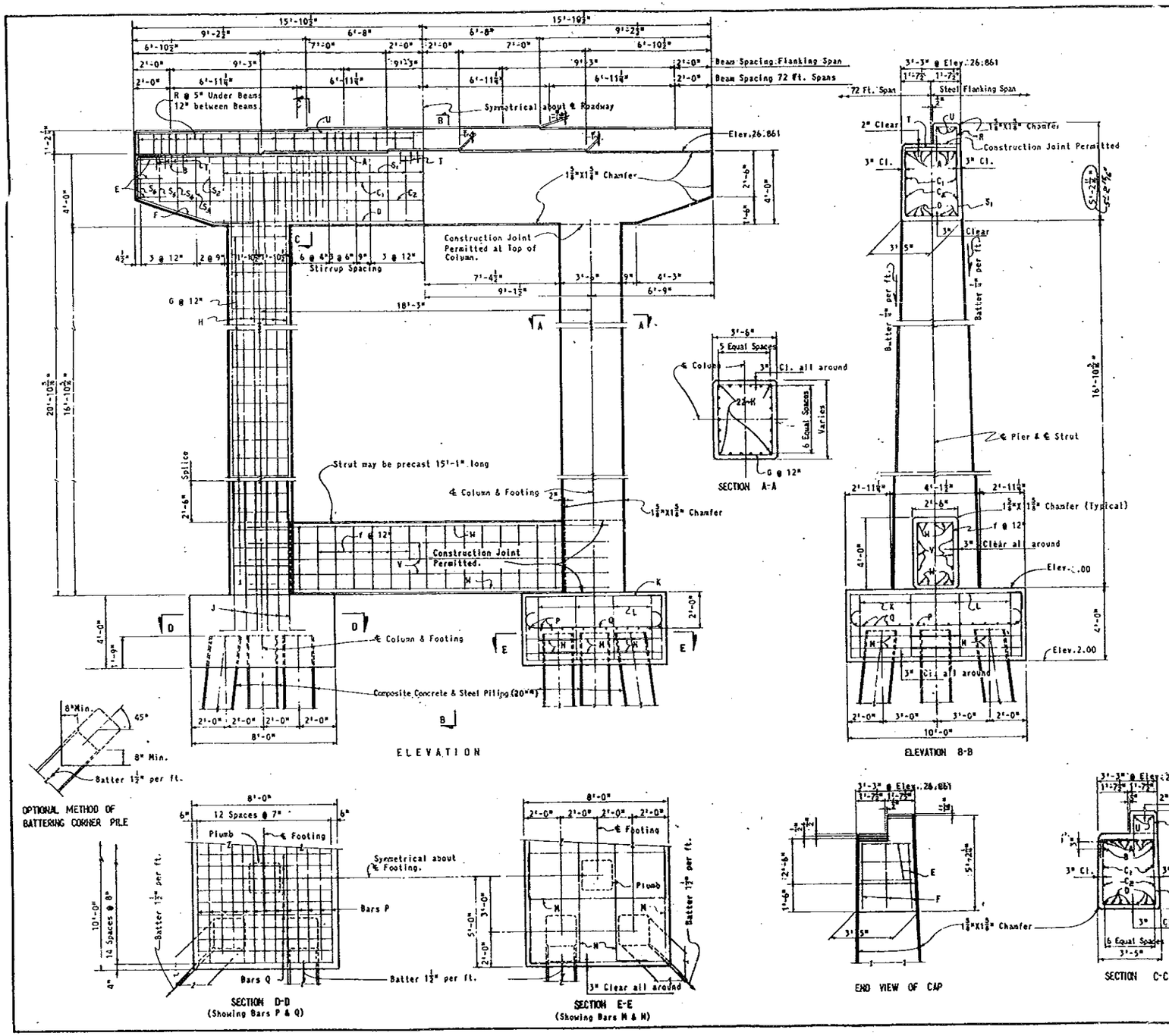

BILL OF REINFORCING STEEL			
MARK	SIZE	NO. REQ'D.	LENGTH
A	10	7	31'- 3"
B	10	4	11'- 6"
C_1	8	2	31'- 3"
C_2	8	2	29'- 9"
D	10	7	22'- 9"
E	6	6	5'- 2"
F	6	6	10'- 4"
G	4	34	Varies
H	8	44	16'- 0"
J	8	44	9'- 6"
K	8	8	22'- 8"
L	8	8	27'- 0"
M	6	8	28'- 0"
N	6	8	12'- 4"
P	9	26	11'- 8"
Q	8	30	9'- 8"
R	4	42	5'- 1"
S_1	5	37	13'- 6"
S_2	5	2	13'- 4"
S_3	5	2	12'-10"
S_4	5	2	12'- 0"
S_5	5	2	11'- 3"
S_6	5	2	10'- 7"
T	4	14	3'- 6"
U	5	2	31'- 3"
V	5	6	20'- 0"
W	7	10	20'- 0"
Y	4	15	11'- 8"

BENDING DIAGRAMS

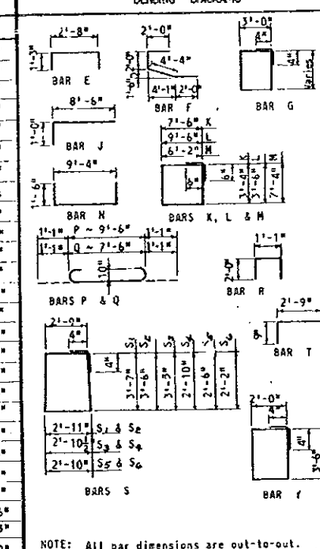

NOTE: All bar dimensions are out-to-out.

ESTIMATED QUANTITIES

ITEM	UNIT	QUANTITY
Class A Concrete (Approach Spans)	Cu. Yd.	61.10
Reinforcing Steel	Lb.	10,473
Composite Concrete & Steel Piling (20"⌀)	Lin. Ft.	*

* See Estimated Bridge Quantities.

NOTE: For General Notes see Sheet No. B-15.

PIER 1-W FOR STRUCTURE "A"

STATE ROAD DEPARTMENT OF FLORIDA
BRIDGE DIVISION

BRIDGES OVER ESTEREO ISLAND AND BONITA BEACH

REVISIONS		ROAD NO.	COUNTY	PROJECT NO.
Dates	Descriptions	S-865	LEE	12530-3153
1-64	Cap depth revised. Elevation B-B.			

	Names	Dates
Detailed by	R.C.B.	5-60
Checked by	MEF	5-60
Quantities by	R.C.B.	5-60
Checked by	NWB	1-61
Traced by		

APPROVED BY

Drawing No. 16 of 60 — Index No. 7700

BX1-125

BX1-126
BX1-126

FED. ROAD DIV. NO.	STATE	PROJECT NO.	FISCAL YEAR	SHEET NO.
3	FLA.	12530-3153	61	B-23

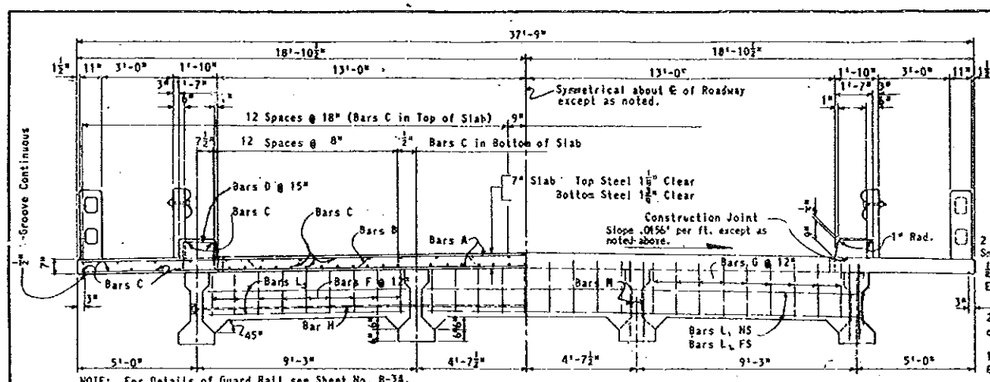

HALF ROADWAY SECTION

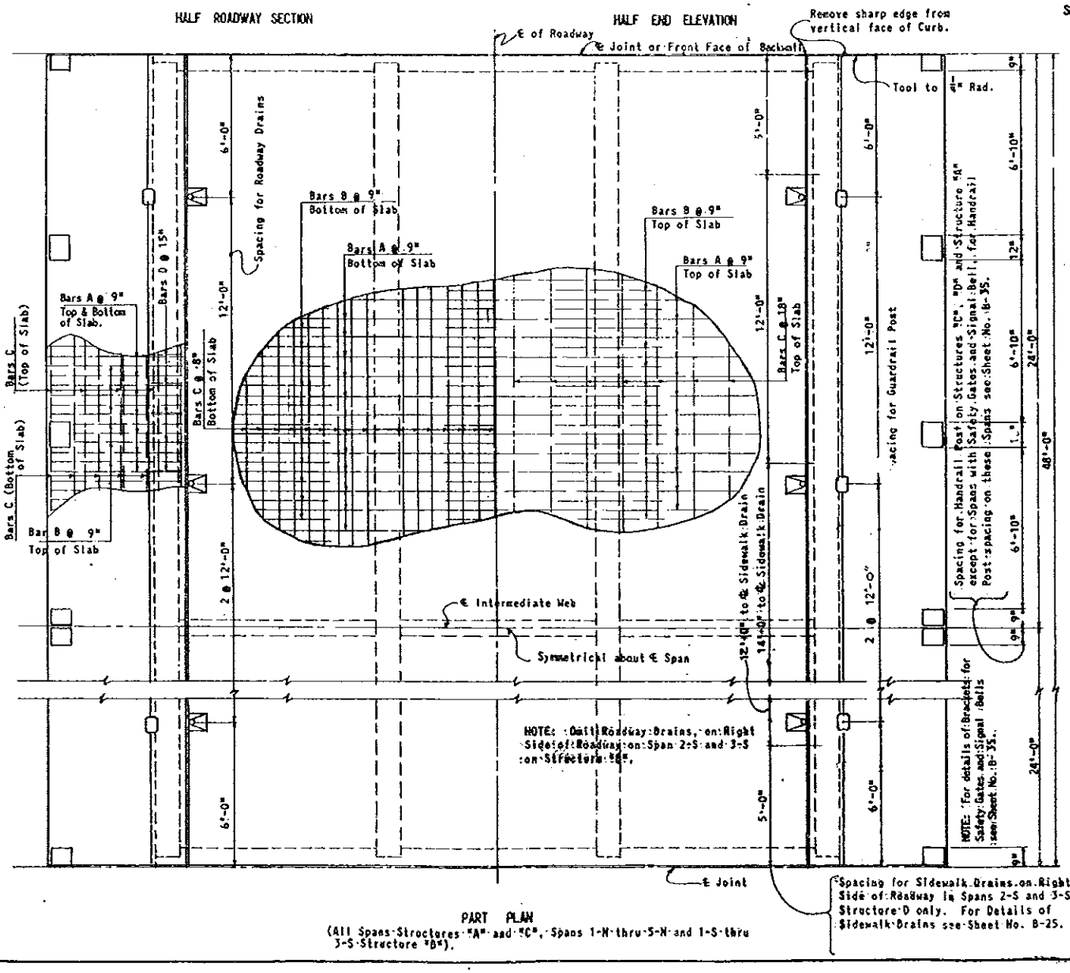

PART PLAN
(All Spans Structures "A" and "C", Spans 1-N thru 5-N and 1-S thru 3-S Structure "D").

HALF END ELEVATION

NOTE: All 48 ft. Spans on Structures "A" & "C" and Spans Nos. 1-N thru 5-N on Structure "D" have normal crown on Roadway as shown on this Sheet. On Structure "D" Superstructures transition from normal crown, at Bent No. 1-S to Superelevation=.083 per ft. at Bent 6-S. For End Elevation Views at Bents 2-S thru 4-S see Sheet No. B-28.

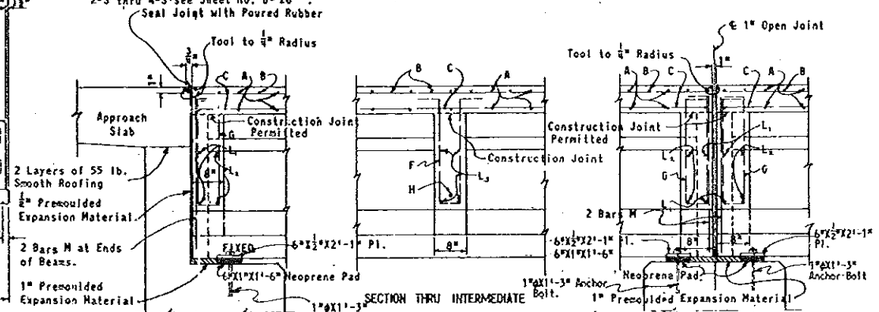

NOTE: Cost of Neoprene Pads shall be included in the Contract Unit Price for Prestressed Beams, Type II.

NOTE: Slab shall be screeded longitudinally between bulkheads using vibratory screeds.

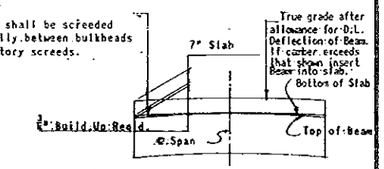

DETAIL SHOWING RELATIONSHIP OF BEAM & SLAB

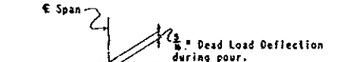

NOTE: Superstructure shall be screeded to grade with no allowance for Permanent Camber.

DEFLECTION DIAGRAM

BILL OF REINFORCING STEEL			
MARK	SIZE	NO. REQUIRED	LENGTH
A	5	130	37'- 5"
B	5	64	38'- 1"
C	4	79	47'- 7"
D	4	78	31'- 5"
F	4	27	5'- 7"
G	4	54	5'- 7"
H **	1" Ø	1	28'- 4"
L_1	6	4	27'-10"
L_2	6	12	8'- 6"
L_3	4	12	8'- 6"
M	5	16	5'- 2"

BENDING DIAGRAMS

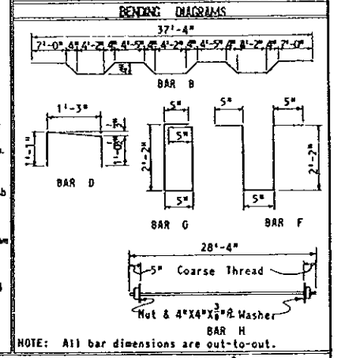

NOTE: All bar dimensions are out-to-out.

ESTIMATED QUANTITIES *		
ITEM	UNIT	QUANTITY
Class A Concrete (Approach Spans)	Cu. Yd.	47.50
Reinforcing Steel	Lb.	11,124
Prestressed Beams, Type II (18-10)	Lin. Ft.	189.2

* Concrete and Reinforcing Steel Quantities shown are for Slab, Curbs and Webs only, and do not include Concrete and Reinforcing Steel in Prestressed Beams.

** Smooth round Structural or Intermediate grade rod with Coarse Threads and heavy duty nuts.

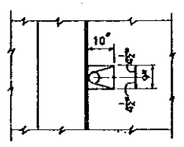

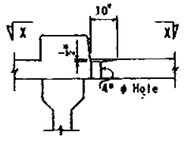

SECTION THRU ROADWAY DRAIN

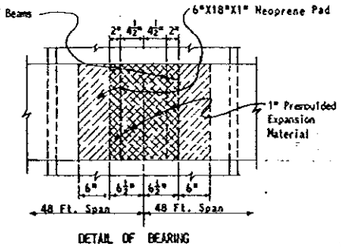

DETAIL OF BEARING
(Showing Location of Neoprene Pads and Preformed Expansion Material

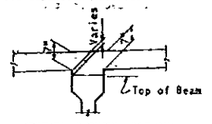

SKETCH SHOWING METHOD OF PROVIDING BUILD-UPS OVER BEAMS

NOTE: For General Notes see Sheet No. B-24

NOTE: Provide Conduit in Curb for Electrical Wiring as indicated on Sheets Nos. B-2 and B-5 Structures A & D only. See Wiring Diagram on Sheet No. B-5 for Expansion Joint Requirements.

48 FT. SPAN SUPERSTRUCTURE FOR STRUCTURE "A" "C" & "D"

STATE ROAD DEPARTMENT OF FLORIDA
BRIDGE DIVISION

BRIDGES BETWEEN ESTERO ISLAND AND BONITA BEACH

REVISIONS		ROAD NO.	COUNTY		PROJECT NO.
Date	Description	S-865	LEE		12530-3153
			Name	Date	APPROVED BY
		Detailed by	J.J.M.	4-60	
		Checked by	E.C.B.	5-60	
		Quantities by	J.J.M.	4-60	
		Checked by	E.C.B.	5-60	
		Traced by	J.J.M.	4-60	

Drawing No. 22 of 60 | Total Sht. No. 7700

BX1-126
BX1-126

BX1-127

BX1-127

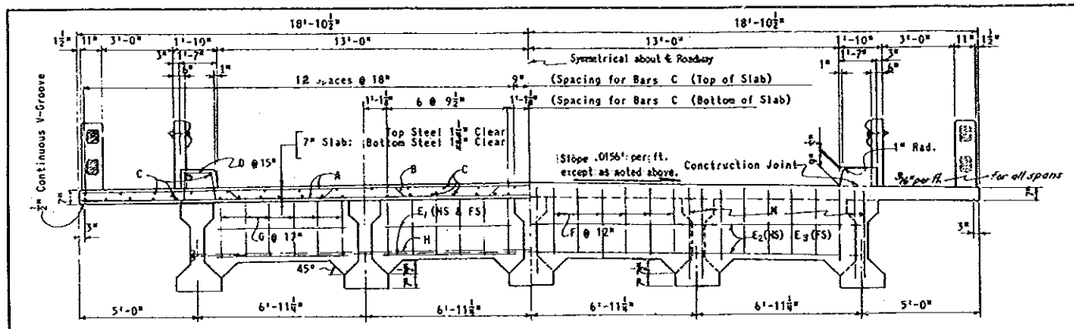

HALF SECTION THRU ROADWAY

HALF END ELEVATION

NOTE: For Details of Guardrail see Sheet No. B-34 and for Details of Handrail see Sheet No. B-33

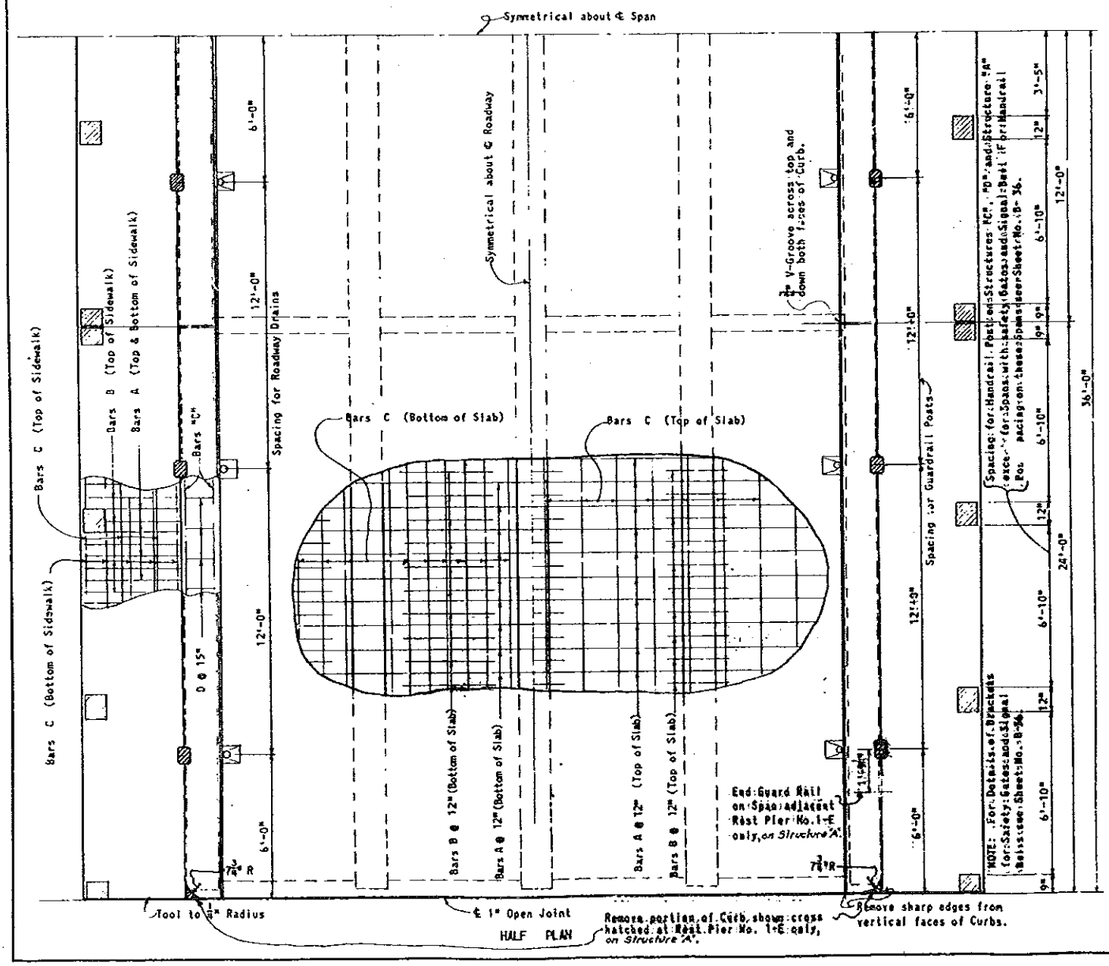

HALF PLAN

NOTE: For Structure "A" Slope of Roadway Crown varies from .0156'/' at Pier No.2-W To 0.006'/' at Pier No.1-W. Slope varies from 0.00'/' at Pier No.1-E to .0289'/' at Pier No.2-E and .0156'/' at Pier No.3-E.

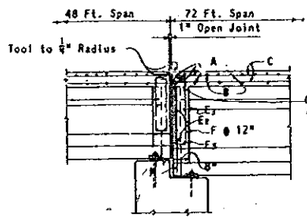

SECTION AT JUNCTION OF 48 FT. SPAN AND 72 FT. SPAN STRUCTURE "C" & "D"

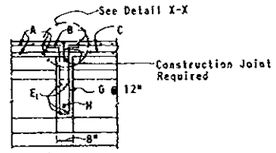

SECTION THRU INTERMEDIATE WEB

NOTE: Pour all Intermediate Web Walls at least 48 hours before pouring slab.

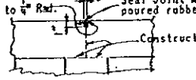

DETAIL "X-X"

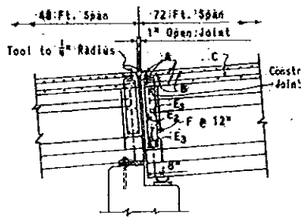

SECTION AT JUNCTION OF 48 FT. SPAN AND 72 FT. SPAN STRUCTURE "A"

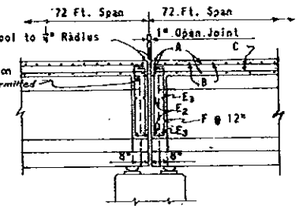

SECTION AT JUNCTION OF 72 FT. SPANS STRUCTURE "A"

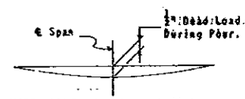

NOTE: Superstructure shall be screeded to grade with no allowance for Permanent Camber.

DEFLECTION DIAGRAM

NOTE: Slab shall be screeded longitudinally between bulkheads using vibratory screeds.

True grade after allowance for D.L. Deflection of Beam. If camber exceeds that shown insert beam into slab.

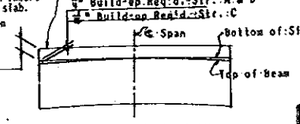

SKETCH SHOWING RELATIONSHIP OF BEAM AND SLAB

NOTE: For Details of Roadway Drains see Sheet No. B-23.

NOTE: Provide Conduit in Curb for Electrical Wiring as indicated on Sheets No. B-2 and B-5 Structures A & D only. See Wiring Diagram Sheet No. B-5 for Expansion Joint Requirements.

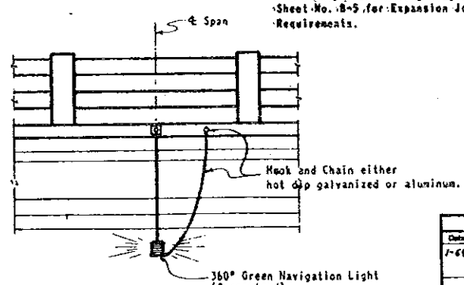

DETAIL OF NAVIGATION LIGHT ON CHANNEL SPAN ON STRUCTURE D ONLY

BILL OF REINFORCING STEEL

MARK	SIZE	NO. REQUIRED	LENGTH
A	5	146	37'- 5"
B	5	72	38'- 5"
C	4	68	72'- 7"
D	4	118	3'- 5"
E1	4	32	6'- 0"
E2	5	4	28'- 0"
E3	5	16	6'- 0"
F	4	48	6'- 7"
G	4	48	6'- 7"
H *	1" ø	2	28'- 5"
M	5	20	3'- 10"

BENDING DIAGRAMS

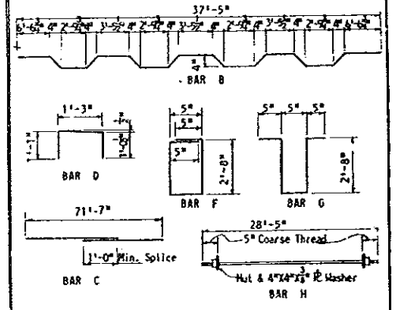

NOTE: All bar dimensions are out-to-out.

ESTIMATED QUANTITIES

ITEM	UNIT	QUANTITY
Class A Concrete (Approach Spans)	Cu. Yd.	71.93 **
Reinforcing Steel	Lb.	13,148 **
Prestressed Beams, Type III (18-10)	Lin.Ft.	356.6
Structural Steel (Shoe Assemblies)	Lump Sum	***

* Smooth round structural or intermediate grade rod with coarse threads and heavy duty nuts.

** Concrete and reinforcing steel quantities shown are for slab, webs, and curbs only and do not include concrete and reinforcing steel in prestressed beams.

*** See Estimated Bridge Quantities (Structure "A" only).

GENERAL NOTES

DESIGN SPECIFICATIONS: A.A.S.H.O., 1961.
LOADING: H20-44.

72'FT. SUPERSTRUCTURE FOR STRUCTURE "A" "C" & "D"

STATE ROAD DEPARTMENT OF FLORIDA
BRIDGE DIVISION

BRIDGES BETWEEN ESTERO ISLAND AND BONITA BEACH

REVISIONS		ROAD NO.	COUNTY	PROJECT NO.
Dates	Descriptions	S-865	LEE	12530-3153
1-65	Sidewalk slope		Name / Date	APPROVED BY
		Detailed by	R.C.B. 4-60	
		Checked by	M.E.F. 4-60	
		Quantities by	R.C.B. 4-60	
		Checked by	M.E.F. 4-60	
		Traced by	R.C.B. 4-60	Drawing No. 28 of 60 — Index No. 7700

FED. ROAD DIV. No.	STATE	PROJECT NO.	FISCAL YEAR	SHEET NO.
3	FLA.	12530-3153	61	B-29

BX1-127

BX1-127

BX1-128

BX1-128

FED. ROAD DIV. NO.	STATE	PROJECT NO.	FISCAL YEAR	SHEET NO.
3	FLA.	12530-3153	161	B-30

TABLE OF DIMENSIONS

STRUCTURE	A and C	B					D								
SPAN	All Spans	ALL SPANS					1-4 thru 4-5 Inclusive	4-5				5-5			
BEAM	All Beams	Beam No.1	Beam No.2	Beam No.3	Beam No.4	All Beams	Beam No.1	Beam No.2	Beam No.3	Beam No.4	Beam No.1	Beam No.2	Beam No.3	Beam No.4
DIMENSION a	47'-3⅜"	47'-6½"	47'-4⅜"	47'-2⅝"	47'-0⅝"	47'-3⅜"	47'-2⅝"	47'-2⅝"	47'-4⅜"	47'-4⅜"	46'-8½"	47'-0½"	47'-1½"	47'-10⅜"
b	23'-7⅝"	23'-9⅝"	23'-8⅛"	23'-7⅛"	23'-6⅛"	23'-7⅝"	23'-7⅛"	23'-7⅛"	23'-8⅛"	23'-8⅛"	23'-4¼"	23'-6⅛"	23'-9⅛"	23'-11⅝"
c	18'-7⅛"	18'-9⅛"	18'-8⅛"	18'-7⅛"	18'-6⅛"	18'-7⅛"	18'-7⅛"	18'-7⅛"	18'-8⅛"	18'-8⅛"	18'-4⅛"	18'-6⅛"	18'-9⅛"	18'-11⅛"
d	4½"	4⅝"	4⅝"	4⅝"	4⅝"	4½"	4⅝"	4⅝"	4⅝"	4⅝"	4½"	4⅝"	4⅝"	4⅝"
e	47'-8½"	47'-11½"	47'-9½"	47'-7½"	47'-5½"	47'-8½"	47'-7½"	47'-7½"	47'-9½"	47'-9½"	47'-1½"	47'-5½"	47'-11½"	48'-3½"

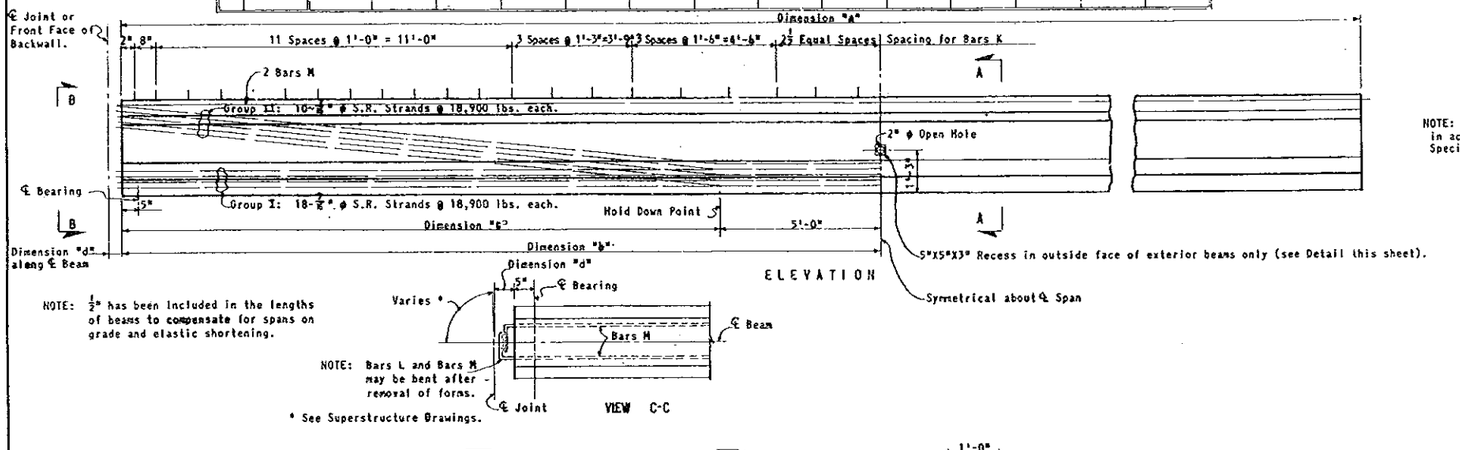

NOTE: ½" has been included in the lengths of beams to compensate for spans on grade and elastic shortening.

NOTE: Bars L and Bars M may be bent after removal of forms.

* See Superstructure Drawings.

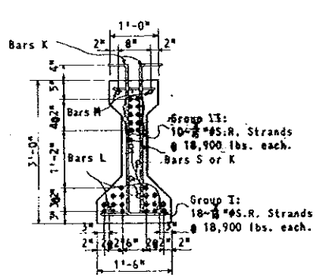

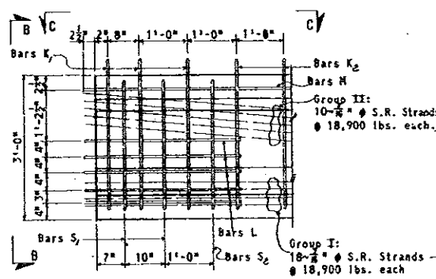

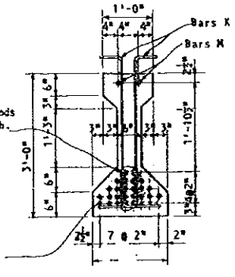

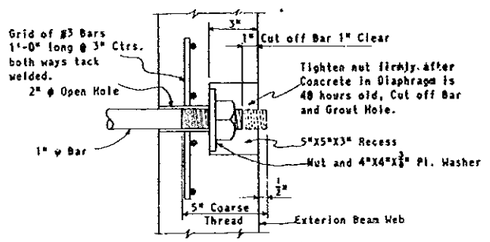

NOTE: Beam Dimensions shown are for Type II Beams but at the Contractor's Option Forms for Type "C" Beams may be used.

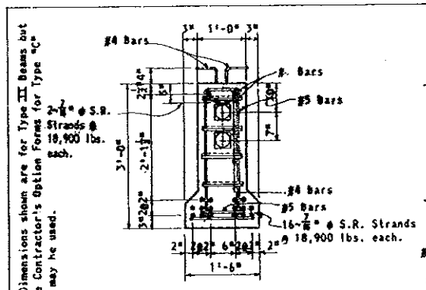

NOTE: Cables shall be tensioned from both ends.

NOTE: Cables shall be draped in parabolic curves.

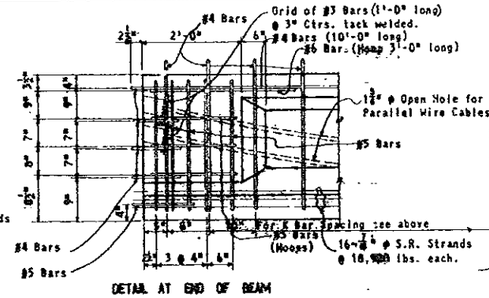

NOTE: Anchorages for Post-tensioned Cables to be set exactly normal to Cables.

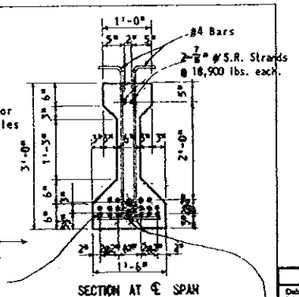

Post-tensioned Cables of 18 wires @ 0.196" dia. Cables shall be stressed to 95,000 lbs. at ℄ Span.

ALTERNATE POST TENSIONED BEAM TYPE II (16-2)

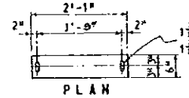

NOTE: At the option of the Contractor, two bent bars 1"X⅜"X2'-6" long may be used in lieu of the four end welded studs shown.

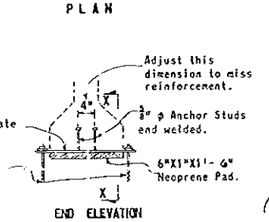

NOTE: Anchor Bolts shall be in accordance with A.S.T.M. Specification A-307.

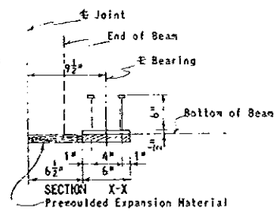

DETAILS OF BEARINGS FOR 48 FT. SPANS

NOTE: Bearing Plates, Anchor Bolts, Nuts and Washers shall be hot dip galvanized in accordance with A.S.T.M. Specifications Designation A-123. The cost of Bearing Plates, Anchor Bolts, Nuts, Washers, Neoprene Pads and Premoulded Expansion Material shall be included in the Contract Unit Price for Prestressed Beams. At the option of the contractor two bent bars 1"X⅜"X1'-8" may be used in lieu of the 4-⅜"ϕX6" Stud Anchors shown.

BILL OF REINFORCING STEEL FOR ONE BEAM

MARK	SIZE	NO. REQ'D.	LENGTH
K_1	5	12	4'-4"
K_2	4	72	4'-4"
L	4	12	3'-10"
M	5	2	Varies *
S_1	5	8	3'-10"
S_2	4	4	3'-10"

BENDING DIAGRAMS

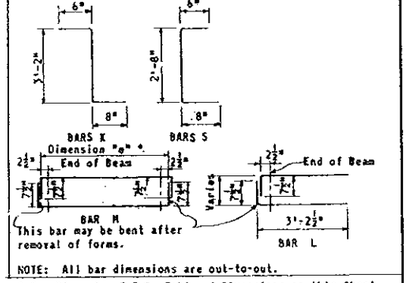

NOTE: All bar dimensions are out-to-out.

* See Dimension "e" in Table of Dimensions on this Sheet.

NOTE: For General Notes see Sheet No. B-31.

NOTE: For Bearing Details see Superstructure Drawings.

PRESTRESSED BEAMS TYPE II (18-10)
48 FT. SPANS FOR STRUCTURES A, B, C & D

STATE ROAD DEPARTMENT OF FLORIDA
BRIDGE DIVISION

BRIDGES BETWEEN ESTERO ISLAND AND BONITA BEACH

REVISIONS		ROAD NO.	COUNTY		PROJECT NO.	
Dates	Descriptions	S-865	LEE		12530-3153	
			Names	Dates	APPROVED BY	
		Detailed by	REN	1-61		
		Checked by	H.W.B.	2-61	T. W. Simmons	
		Quantities by			Assistant State Highway Engineer	
		Checked by			Drawing No.	Index No.
		Traced by	REN	1-61	29-760	7700

BX1-128

BX1-129

BX1-129

FED. ROAD DIV. NO.	STATE	PROJECT NO.	FISCAL YEAR	SHEET NO.
3	FLA.	12530-3153	61	8-31

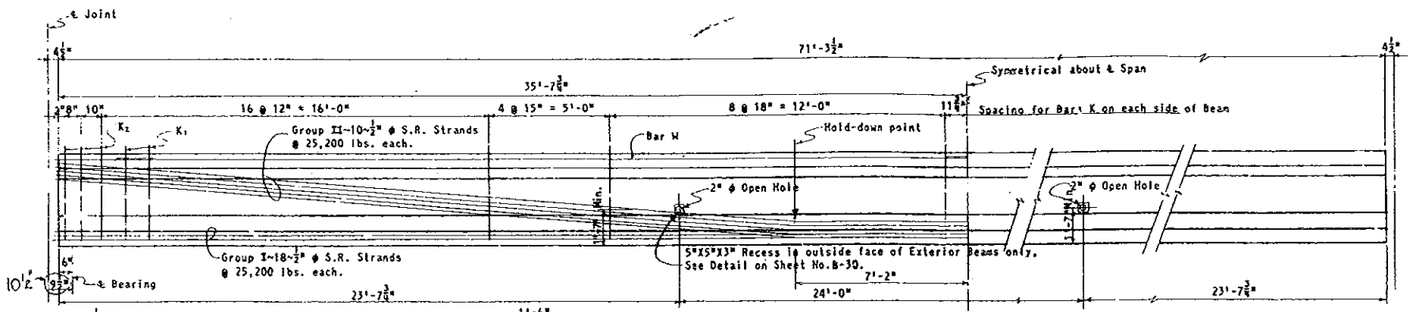

NOTE: ½" has been included in the lengths of Beams to compensate for Span lengths on Grade and elastic shortening.

ELEVATION
TYPE III BEAM USING HARPED STRANDS

NOTE: For Details of Expansion Shoes on Structure "A" see Sheet No. B-32.

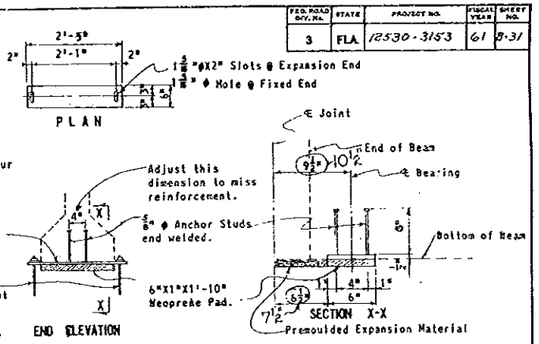

NOTE: At the option of the Contractor, two bent bars 1"X½"X2'-6" long may be used in lieu of the four end welded studs shown.

NOTE: Anchor Bolts shall be in accordance with A.S.T.M. Specification A-307.

DETAIL OF BEARINGS FOR 72 FT. SPAN OH STRUCTURES "C" AND "D"

NOTE: Bearing Plates, Anchor Bolts, Nuts and Washers shall be hot dip galvanized in accordance with A.S.T.M. Specifications Designation A-123. The cost of Bearing Plates, Anchor Bolts, Nuts, Washers, Neoprene Pads and Premoulded Expansion Material shall be included in the Contract Unit Price for prestressed beams. At the option of the contractor two bent bars 1"X½"X1'-8" may be used in lieu of the 6"X½" Stud Anchors shown.

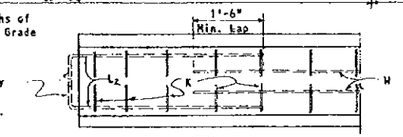

VIEW B-B

NOTE: Bars L may be bent after removal of forms.

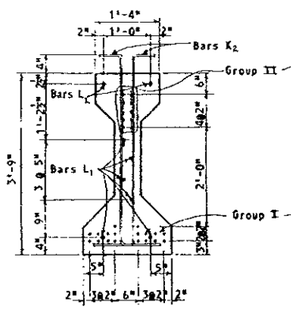

VIEW A-A

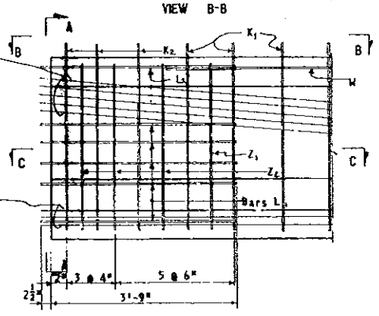

DETAIL AT END OF BEAM

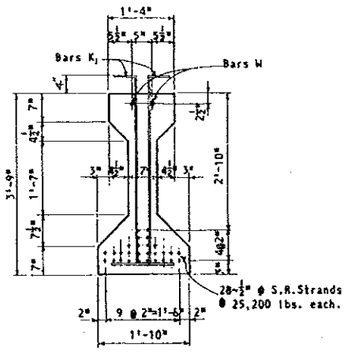

SECTION AT ℄ SPAN

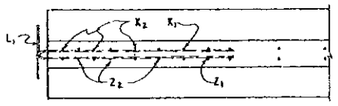

SECTION C-C

NOTE: Cable shall be tensioned from both ends.

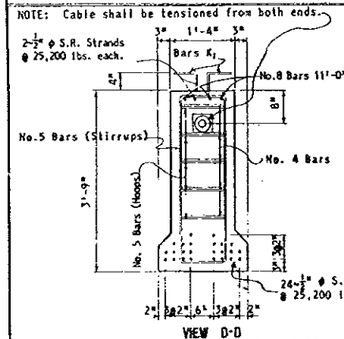

VIEW D-D

NOTE: Anchorages for post-tensioned Cables shall be set normal to Cables.

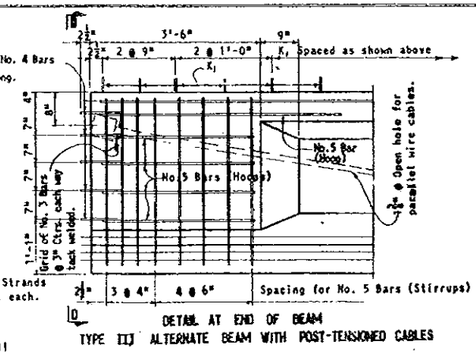

DETAIL AT END OF BEAM
TYPE III ALTERNATE BEAM WITH POST-TENSIONED CABLES

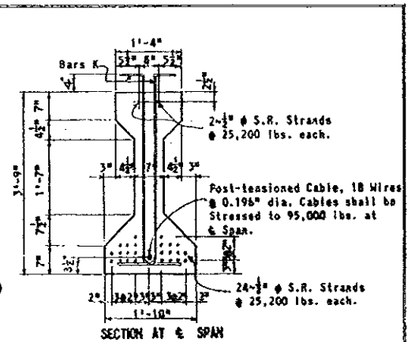

SECTION AT ℄ SPAN

GENERAL NOTES

SHOP DRAWINGS: Contractor shall submit Shop Drawings showing complete details of Beams including Reinforcing Steel.
FORMS & PALLETS: All Beams shall be cast on Concrete Based pallets and in metal forms.
FINISH: Tops of Beams to be rough floated. At approximately the time of initial set, entire top of beam shall be scrubbed transversely with coarse wire brush to remove all laitance and to produce a roughened surface for bonding slab.
CONCRETE: Concrete for Beams shall be Class P.
CYLINDER STRENGTH: At transfer of the tensioning load, the cylinder strength of concrete shall be 4000 p.s.i.
EXTENSIONS: All strands and wires shall extend 2½" beyond ends of beam.
HANDLING: In the handling of beams, they must be maintained in an upright position at all times and must be picked up from points located a maximum distance of 3'-6" from the ends of the beam.
GROUTING: All Post-tensioned reinforcement shall be grouted after stressing. See Art. 401.9 of the Specifications.
CURING COMPOUND: The use of membrane curing compound will not be permitted on the tops of top flanges of prestressed beams.

BILL OF REINFORCING STEEL FOR ONE BEAM

MARK	SIZE	NO. REQ'D.	LENGTH
K_1	4	112	5'- 3"
K_2	5	12	5'- 3"
L_1	4	12	4'- 8"
L_2	5	4	4'- 8"
Z_1	4	4	4'-11"
Z_2	5	12	4'-11"
W	5	2	68'- 3"

BENDING DIAGRAMS

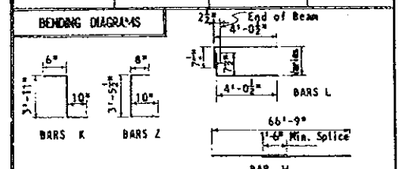

NOTE: All bar dimensions are out-to-out.

NOTE: For "Detail of Intermediate Diaphragm Bar at Exterior Beam" see Sheet No. B-30 .

PRESTRESSED BEAMS TYPE III (18-10)
FOR STRUCTURES "C" & "D"

STATE ROAD DEPARTMENT OF FLORIDA
BRIDGE DIVISION

BRIDGES BETWEEN ESTERO ISLAND AND BONITA BEACH

REVISIONS		ROAD NO.	COUNTY		PROJECT NO.
Dates	Descriptions	S-865	LEE		12530-3153
9/1965	Revised location of ℄ Bearing Forms & Detail & Design Data Sheet No. B-30		Names	Dates	APPROVED BY
		Detailed by	R.C.B.	1-17-61	T. W. Jennings
		Checked by	N.W.B.	1-27-61	Assistant State Highway Engineer
		Quantities by			
		Checked by			Drawing No. 30 of 60
		Traced by			Order No. 7700

BX1-129

BX1-130

BX1-130

FED. ROAD D.T. NO.	STATE	PROJECT NO.	FISCAL YEAR	SHEET NO.
3	FLA.	12530-3153	61	B-32

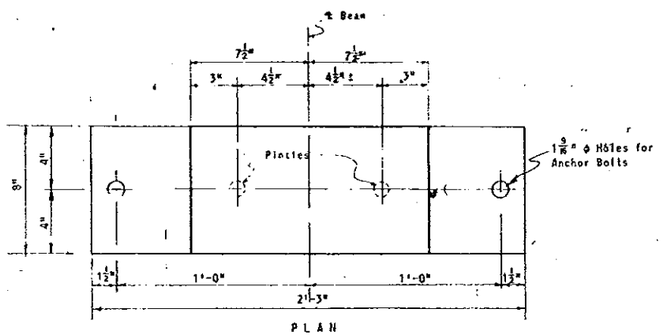

PLAN

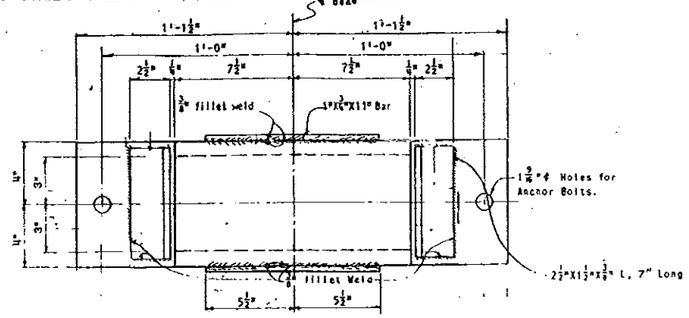

PLAN

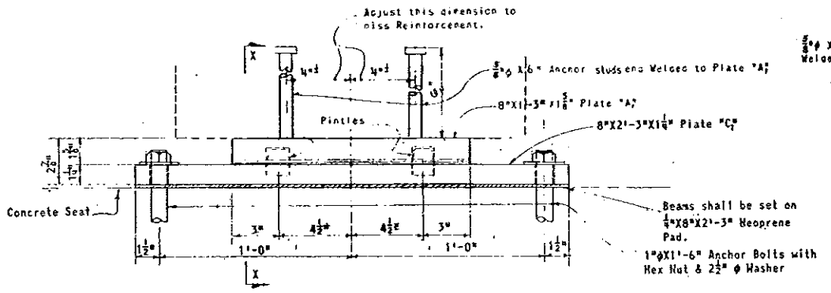

ELEVATION

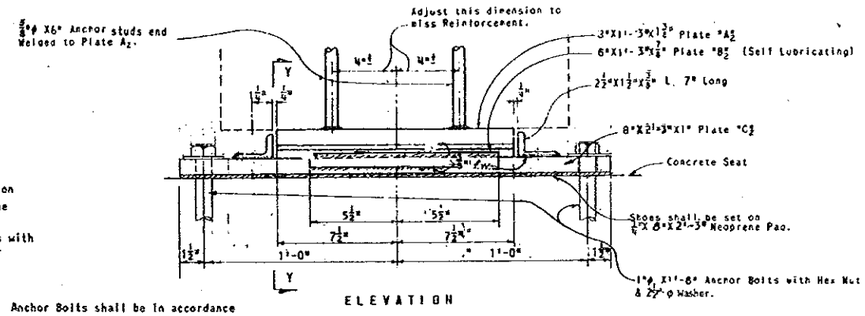

ELEVATION

NOTE: Anchor Bolts shall be in accordance with A.S.T.M. Specification A-307.

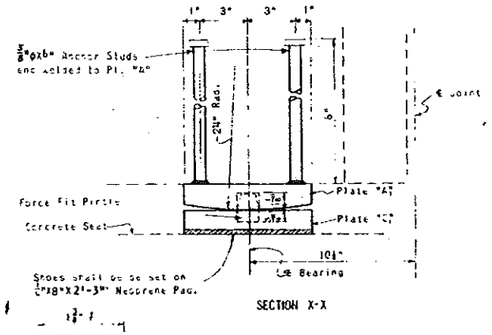

SECTION X-X

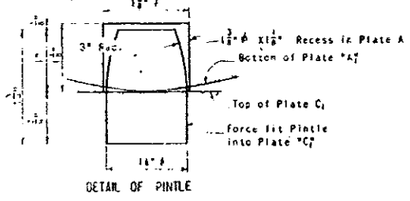

DETAIL OF PINTLE

DETAILS OF SHOE AT FIXED END OF SPAN
(Weight of One Shoe Assembly: 148 lbs.)

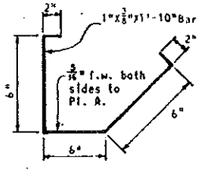

ALTERNATE ANCHOR STRAP

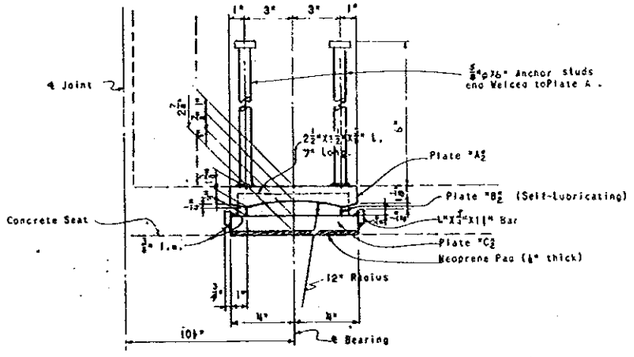

SECTION Y-Y

DETAILS OF SHOE AT EXPANSION END OF SPAN
(Weight of One Shoe Assembly: 152 lbs.)

NOTE: At the option of the Contractor two bent bars 1"X⅜"X1'-10" may be substituted for the four ⅝"x6" Anchor Studs shown. (See "Alternate Anchor Strap," this sheet).

GENERAL NOTES

NEOPRENE PADS: Cost of Neoprene Pads shall be included in the Contract Lump Sum Price for Structural Steel (Shoe Assemblies).
SHOE MATERIAL: All Bearing Plates (except self-lubricating Plates) Anchor Bolts, Nuts, Washers and Pintles shall be hot dip galvanized in accordance with requirements of A.S.T.M. Specifications Designation A-123. Self-lubricating Plates shall conform to requirements of Articles 837.15 and 837.16 of the State Road Department Standard Specifications. Structural Steel Shoes may be A.S.T.M. Designations A-7, A-36 or A-373. Use of cast shoes will be permitted. The castings shall conform to A.S.T.M., 60.30 or 65-35. All Pits shallbe repaired by welding and shall be ground smooth, surface roughness shall not exceed 250 micro inches measured in accordance with A.S.A. Standards. Scale weights will be acceptable for payment.

BEARING SHOE ASSEMBLIES 72 FT. SPANS, STRUCTURE "A"

STATE ROAD DEPARTMENT OF FLORIDA
BRIDGE DIVISION

BRIDGES BETWEEN ESTERO ISLAND AND BONITA BEACH

REVISIONS		ROAD NO.	COUNTY		PROJECT NO.
Date	Description	S-865	LEE		12530-3153
			Name	Date	APPROVED BY
		Detailed by	C.W.S.	5-60	
		Checked by	J.J.M.	5-60	T. W. Jennings
		Quantities by			Asst. State Highway Engr.
		Checked by			Date Approved 7-7-60
		Traced by			



BX1-131
BX1-131

FED. ROAD DIV. NO.	STATE	PROJECT NO.	FISCAL YEAR	SHEET NO.
3	FLA.	12530-3153	61	B-33

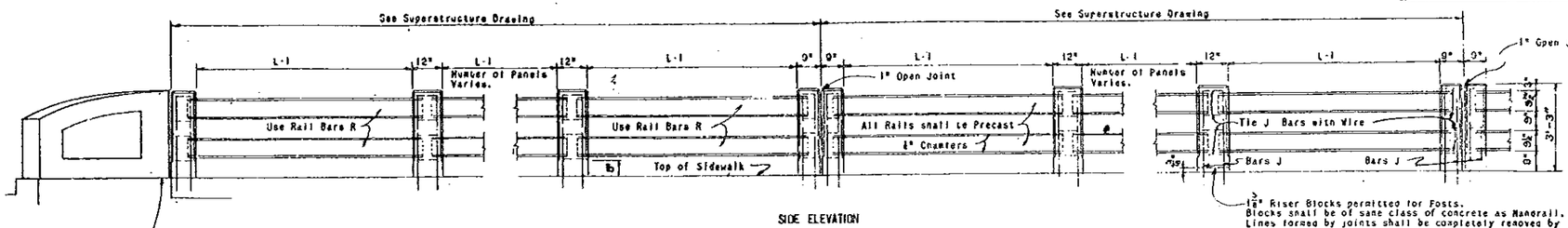

NOTE: Markers recording the Elevation shall be placed on top of the curb near each end of Bridge. Markers are to be furnished by the State Road Department and installed by the Contractor. The cost of installing the Markers shall be included in the Contract Unit Price for Concrete Handrail.

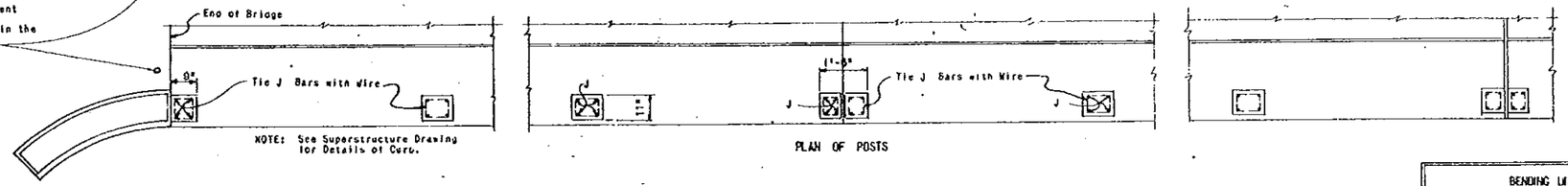

NOTE: See Superstructure Drawing for Details of Curb.

NOTE: See End Bent Drawings for End Post Details. Cost of End Post shall be paid for at the Contract Unit Price for Class A Concrete (Approach Spans) and Reinforcing Steel.

BENDING DIAGRAMS

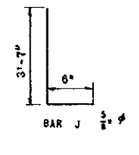

NOTE: All Bar Dimensions are out-to-out

NOTE: At the option of the Contractor, 4 - 3/4" ϕ S.R. Cables @ 14,000 lbs. each may be substituted for the 4 - ϕ 5 R Bars.

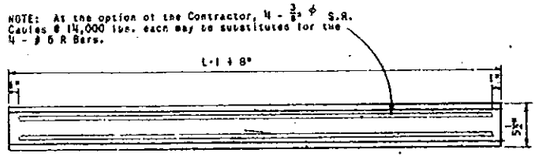

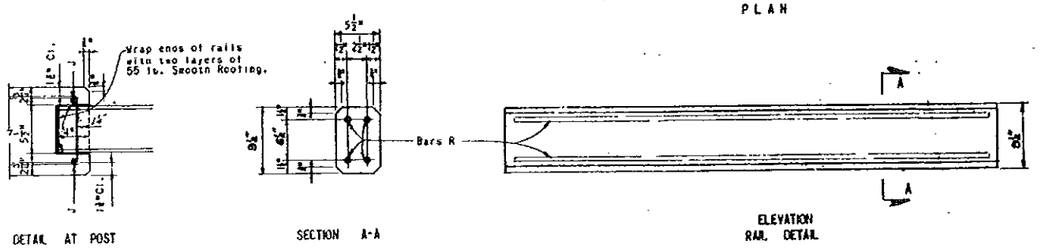

GENERAL NOTES

CONCRETE: Class A Concrete shall be used in Handrail.
CHAMFER: All exposed edges to be chamfered 1" unless otherwise shown.
REINFORCING STEEL: Reinforcing Steel shall conform to A.A.S.H.O. Specs. M 137.
FABRICATION OF REINFORCING STEEL: Reinforcing Steel shall be fabricated according to the A.A.S.H.O Manual of Recommended practice for Detailing Reinforced Concrete Highway Structures.
PAYMENT: Handrail shall be paid for per linear foot which shall include all Concrete and reinforcing steel in the Handrail.
Handrail shall be measured along ℄ of Rail with no deduction for Open Joints.
Deductions shall be made for 2'-8" openings at Safety Gates and 1'-9" at Traffic Lights.

REVISIONS	
Date	Description

CONCRETE HANDRAIL STRUCTURES "A" THRU "O"

STATE ROAD DEPARTMENT OF FLORIDA
BRIDGE DIVISION

BRIDGES BETWEEN ESTERO ISLAND AND BONITA BEACH

ROAD NO.	COUNTY		PROJECT NO.
S-865	LEE		12530-3153
	Name	Date	APPROVED BY
Detailed by	A.J.H	6-58	
Checked by	K.L.V.	7-58	
Quantities by			
Checked by			
Traced by	A.J.H	6-58	

Drawing No. 32 of 60
Index No. 7700

33

BX1-132

BX1-132

FED. ROAD DIV. NO.	STATE	PROJECT NO.	FISCAL YEAR	SHEET NO.
3	FLA	12530-3153	61	8-A

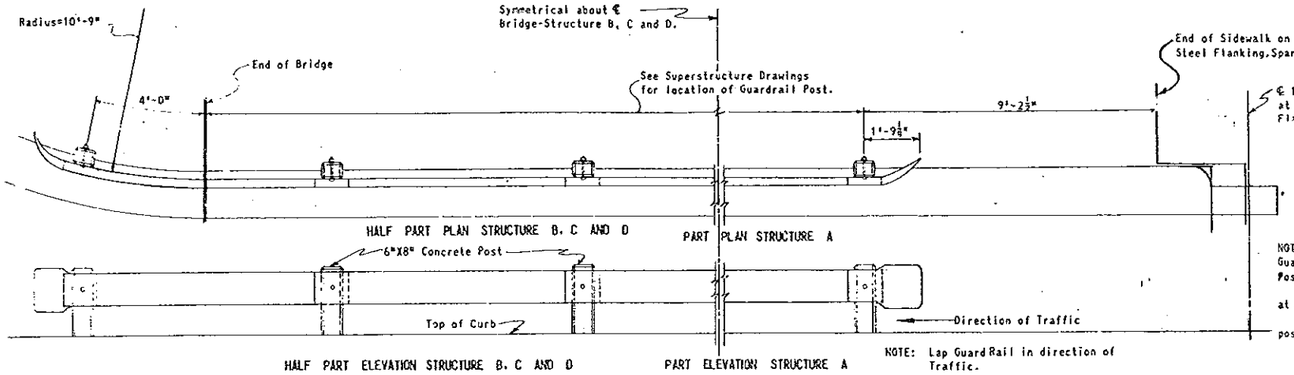

NOTE: It is not required that Guard Rail splices be made at Post.
Splices in rail may be made at any point.
Holes for connectiong rail to post may be drilled in the field.

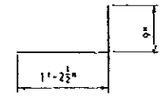

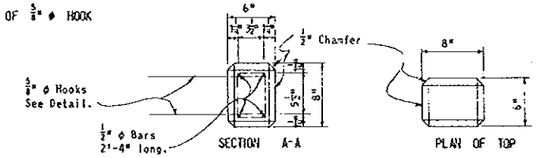

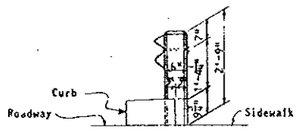

NOTE: 6 S.R. Strands ⅜" ϕ or ½" ϕ may be substituted for ½" Bars.

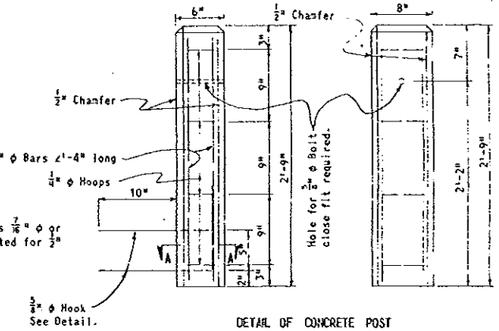

Cost of Guardrail Post on Bridge shall be included in the Contract Unit Price for Guardrail.

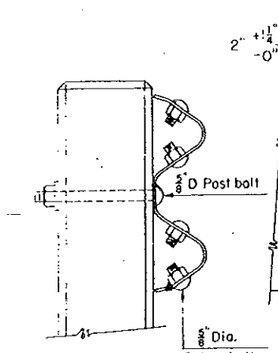

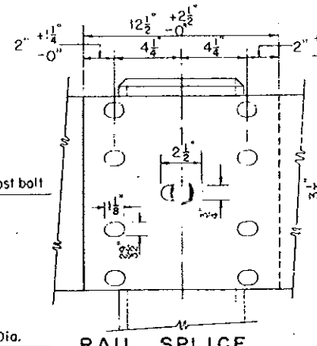

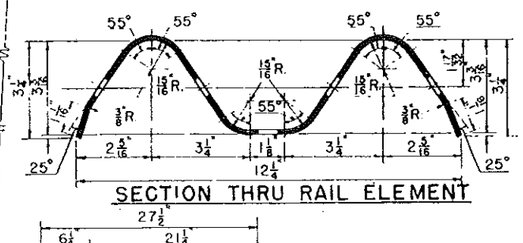

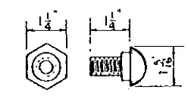

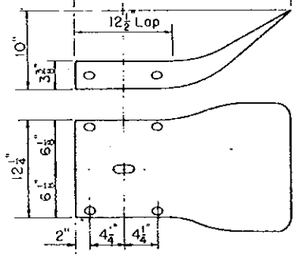

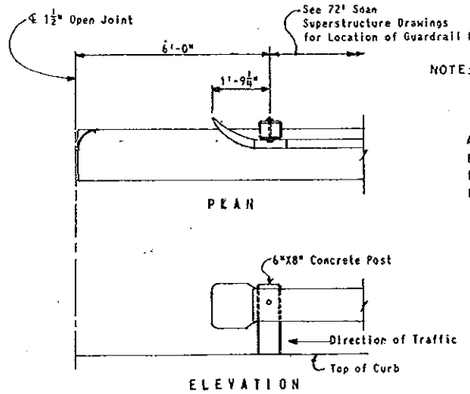

NOTE: Guard Rail shall be 0.125" (Min.) thick Aluminum.

Aluminum Rail	Alclad Alloy 2024-T3
End Sections	Alclad Alloy 2024-T42(1)
Bolts (for Aluminum rail)	Alloy 2024-T4 with 205 Alumilite finish
Nuts (for Aluminum rail)	Alloy 6262-T9

(1) Chemical Composition only.

GUARD RAIL

STATE ROAD DEPARTMENT OF FLORIDA
ROADWAY PLANS DEPARTMENT

BRIDGES BETWEEN ESTERO ISLAND AND BONITA BEACH

REVISIONS		ROAD NO	COUNTY	PROJECT NO
Date	Description	S-865	LEE	12530-3153

	Name	Date	APPROVED BY
Designed by	h.w.	7-21-56	
Checked by	c.d.d.	7-21-56	
Quantities by			
Checked by			
Traced by	h.w.	7-21-56	

SHEET NO. 39 OF 80 SHEETS
STATE PROJECT NO. 7700

34



BX1-132

BX1-132

BX1-133

BX1-133

FED. ROAD DIST. NO.	STATE	PROJECT NO.	FISCAL YEAR	SHEET NO.
3	FLA.	12530-3153	61	B-35

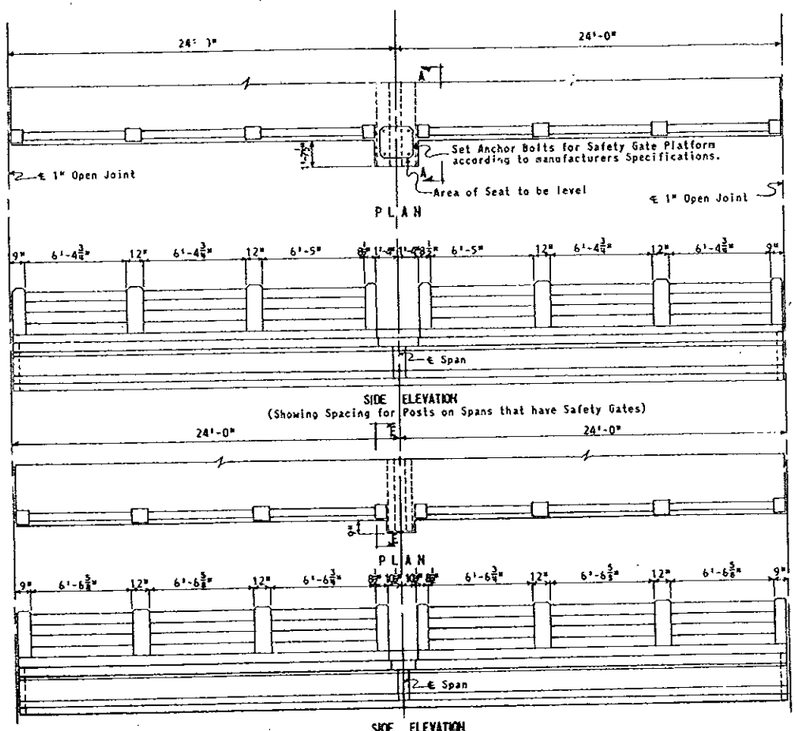

SIDE ELEVATION
(Showing spacing for Posts on Spans that have a Traffic Light and Signal Bell)

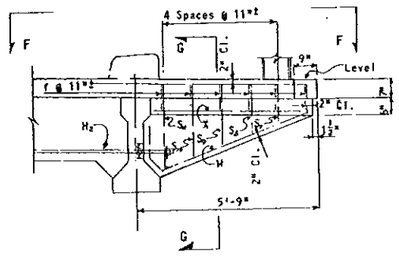

SECTION E-E

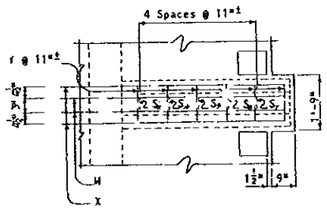

VIEW F-F

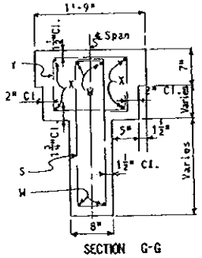

SECTION G-G

NOTE: The Estimated Quantities shown are in addition to the Estimated Quantities shown on the Superstructure Drawings that have Safety Gate Platforms or Traffic Light and Signal Bell Platforms.

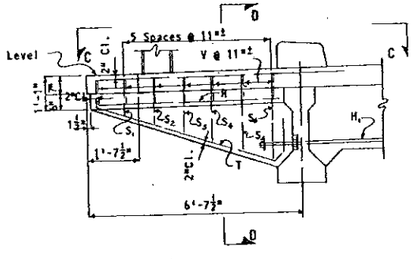

SECTION A-A

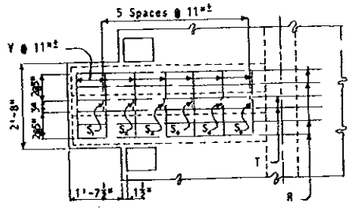

VIEW C-C

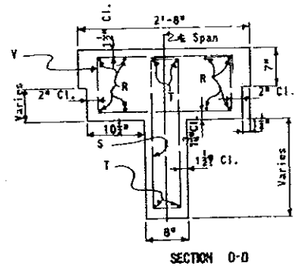

SECTION D-D

- Bar H_1 is smooth, round structural or intermediate grade steel rod with course threads, heavy duty nuts & 4"x4"x⅜" Pl. Bar H_1 shall be substituted for Bar H in Superstructures that have Safety Gate Platforms.
- Bar H_2 is smooth, round structural or intermediate grade steel rod with course threads, heavy duty nuts & 4"x4"x½" Pl. Bar H_2 shall be substituted for Bar H in Superstructures that have Traffic Light Platform.

BILL OF REINFORCING STEEL*

MARK	SIZE	NO. REQUIRED (SAFETY GATE PLATFORM)	NO. REQUIRED (TRAFFIC LIGHT & SIGNAL BELL PLATFORM)	LENGTH
H_1 *	1" ϕ	1		30'- 4"
H_2 **	1" ϕ		1	29'- 4"
R	4	4		14'- 1"
S_1	4	1		3'- 5"
S_2	4	1		4'- 1"
S_3	4	1		4'- 9"
S_4	4	1		5'- 5"
S_5	4	1		6'- 1"
S_6	4	1		6'- 9"
S_7	4		1	3'- 9"
S_8	4		1	4'- 7"
S_9	4		1	5'- 3"
S_{10}	4		1	6'- 1"
S_{11}	4		1	6'- 9"
T	8	2		17'- 3"
W	8		2	15'- 2"
V	4	7		6'- 6"
X	4		2	12'- 3"
r	4		6	4'- 8"

BENDING DIAGRAMS

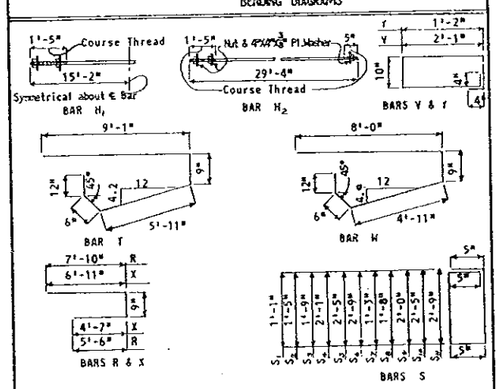

NOTE: All bar dimensions are out-to-out.

ESTIMATED QUANTITIES*

ITEM	SAFETY GATE PLATFORM UNIT	SAFETY GATE PLATFORM QUANTITY	TRAFFIC LIGHT & SIGNAL BELL PLATFORM UNIT	TRAFFIC LIGHT & SIGNAL BELL PLATFORM QUANTITY
Class A Concrete (Approach Spans)	Cu. Yd.	.53	Cu. Yd.	.31
Reinforcing Steel	Lb.	186	Lb.	136

*Concrete and reinforcing steel quantities shown are for one Safety Gate Platform or one Traffic Light & Signal Bell Platform.

DETAILS OF TRAFFIC LIGHT AND SAFETY GATE PLATFORMS, HANDRAIL FOR 48 FT. SPAN - STRUCTURE A

STATE ROAD DEPARTMENT OF FLORIDA
BRIDGE DIVISION

BRIDGES BETWEEN ESTERO ISLAND AND BONITA BEACH

REVISIONS Date	Description

ROAD NO.	COUNTY	PROJECT NO.
S-865	LEE	12530-3153

	Names	Date
Detailed by	B.R.L.	1-61
Checked by	J.L.P.	1-61
Quantities by	B.R.L.	1-61
Checked by	J.L.P.	1-61
Traced by	B.R.L.	1-61

APPROVED BY: T. W. Jennings, Assistant State Highway Engineer

Drawing No. 34 of 60 | Index No. 7700

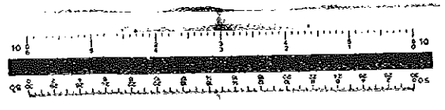

BX1-133

BX1-133

BX1-134

BX1-134

FED. ROAD DIV. No.	STATE	PROJECT NO.	FISCAL YEAR	SHEET NO.
3	FLA.	12530-3153	61	8-36

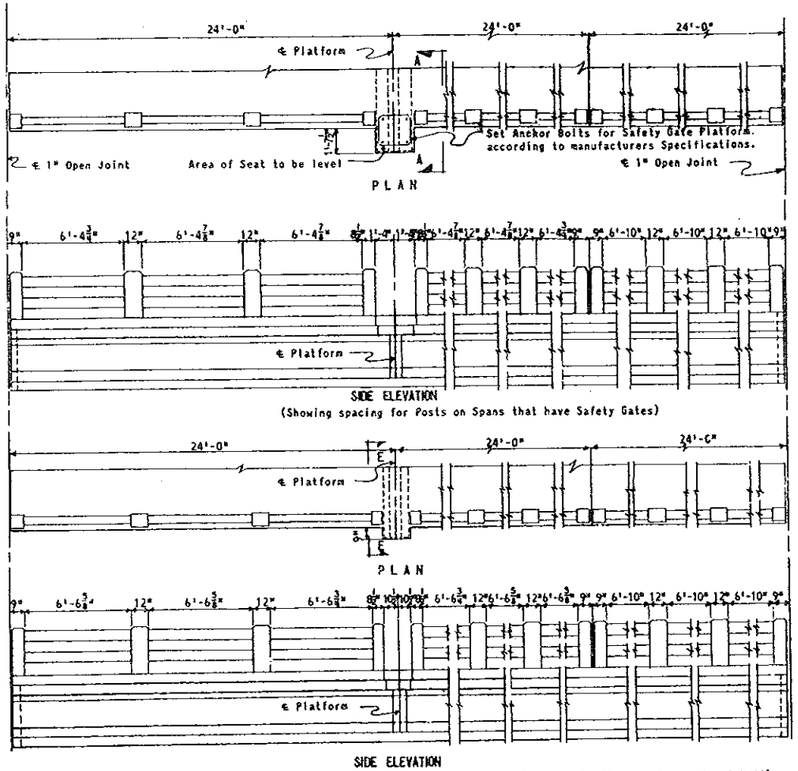

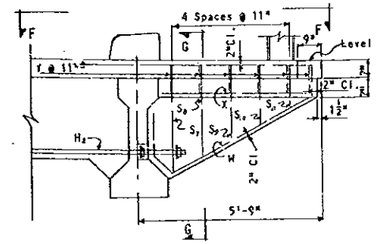

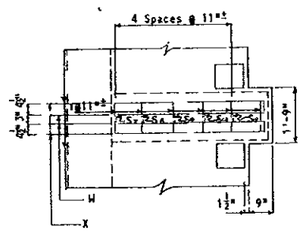

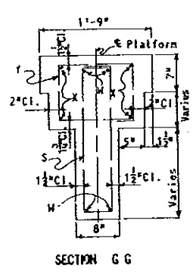

BILL OF REINFORCING STEEL*				
MARK	SIZE	NO. REQ'D. (SAFETY GATE PLATFORM)	NO. REQ'D. (TRAFFIC LIGHT & SIGNAL BELL PLATFORM)	LENGTH
H_1*	1"ϕ	1		30'- 5"
H_2**	1"ϕ		1	29'- 5"
R	4	4		14'- 2"
S_1	4	1		8'- 1"
S_2	4	1		7'- 3"
S_3	4	1		6'- 5"
S_4	4	1		5'- 7"
S_5	4	1		4'- 7"
S_6	4	1		3'- 9"
S_7	4		1	8'- 1"
S_8	4		1	7'- 1"
S_9	4		1	5'-11"
S_{10}	4		1	4'-11"
S_{11}	4		1	3'-11"
T	8	2		17'- 5"
W	8		2	15'- 6"
V	4	7		6'- 8"
X	4		2	12'- 4"
r	4		6	4'-10"

BENDING DIAGRAMS

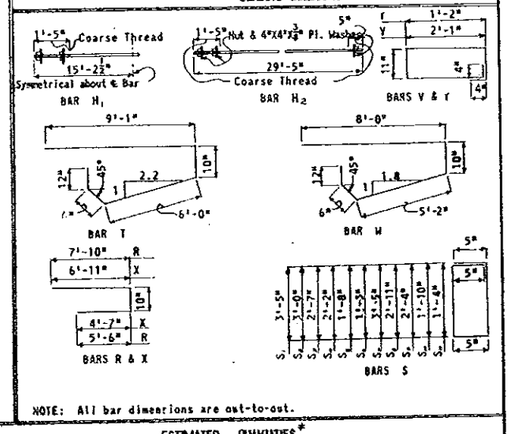

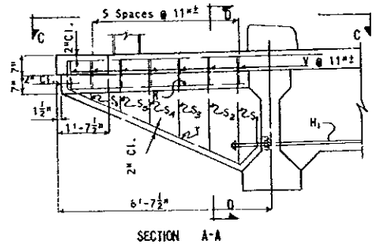

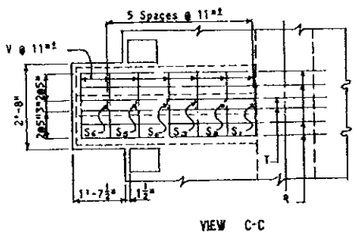

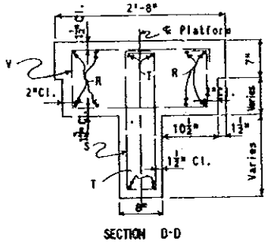

* Bar H_1 is smooth, round structural or intermediate grade steel rod with course threads, heavy duty nuts & 4"x4"x⅜" Plate
Bar H_1 shall be substituted for Bar H in Superstructures that have safety gate platforms.

** Bar H_2 is smooth, round structural or intermediate grade steel rod with course threads, heavy duty nuts & 4"x4"x⅜" Plate
Bar H_2 shall be substituted for Bar H in Superstructures that have Traffic Light Platform.

NOTE: The Estimated Quantities shown are in addition to the Estimated Quantities shown on the Superstructure Drawings that have Safety Gate Platforms or Traffic Light and Signal Bell Platforms.

* Concrete and reinforcing steel quantities shown are for One Safety Gate Platform or One Traffic Light & Signal Bell Platform.

ESTIMATED QUANTITIES*				
	SAFETY GATE PLATFORM		TRAFFIC LIGHT & SIGNAL BELL PLATFORM	
ITEM	UNIT	QUANTITY	UNIT	QUANTITY
Class A Concrete (Approach Spans)	Cu. Yd.	.61	Cu. Yd.	.37
Reinforcing Steel	Lb.	191	Lb.	141

DETAILS OF TRAFFIC LIGHT AND SAFETY GATE PLATFORMS HANDRAIL FOR 72 FT. SPANS ~ STRUCTURE A

STATE ROAD DEPARTMENT OF FLORIDA
BRIDGE DIVISION

BRIDGES BETWEEN ESTERO ISLAND AND BONITA BEACH

REVISIONS		ROAD NO.	COUNTY	PROJECT NO.
Date	Description	S-865	LEE	12530-3153

	Names	Date
Detailed by	B.R.L.	1-61
Checked by	A.M.S.	2-61
Quantities by	B.R.L.	1-61
Checked by	A.M.S.	2-61
Traced by	B.R.L.	1-61

APPROVED BY T. W. Jemmons
Assistant State Highway Engineer
Drawing No. 35.a1.GG
Index No. 7700

BX1-134

BX1-134

BX1-135

BX1-135

FED. ROAD DIST. NO.	STATE	PROJECT NO.	FISCAL YEAR	SHEET NO.
3	FLA.	12530-3153	61	B-37

BILL OF REINFORCING STEEL

MARK	SIZE	No. Req'd	LENGTH	LOCATION	BENDING
A	5	68	38-2"	Slab	See Diagram
B	5	136	37'-5"	Slab	"
B1	5	8	27'-10"	Slab	"
C	4	70	47'-0"	Slab & Curb	Straight
C1	4	20	44'-10"	Sidewalk Slab	"
D	4	42	3'-4"	Curb	See Diagram
E	#1" ϕ	2	28'-3"	Diaphragms	"
F	4	2	27'-6"	"	Straight
G	4	27	5'-11"	"	See Diagram
J	4	27	1'-2"	Diaphragms	"
K	5	1	27'-6"	"	Straight

BENDING DIAGRAMS

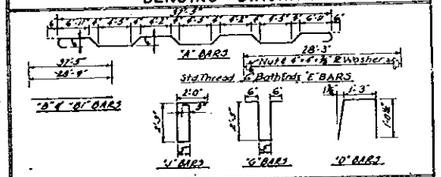

ESTIMATED QUANTITIES

ITEM	UNIT	QUANTITY
Class "A" Concrete (Approach Spans)	Cu. Yd.	42.64
Reinforcing Steel	Lb.	11,534
Structural Steel (Flanking Span, Ladders & Platforms) Lump Sum ✱ ✱		
Shear Connectors (3/4"ϕ)	Lb.	973

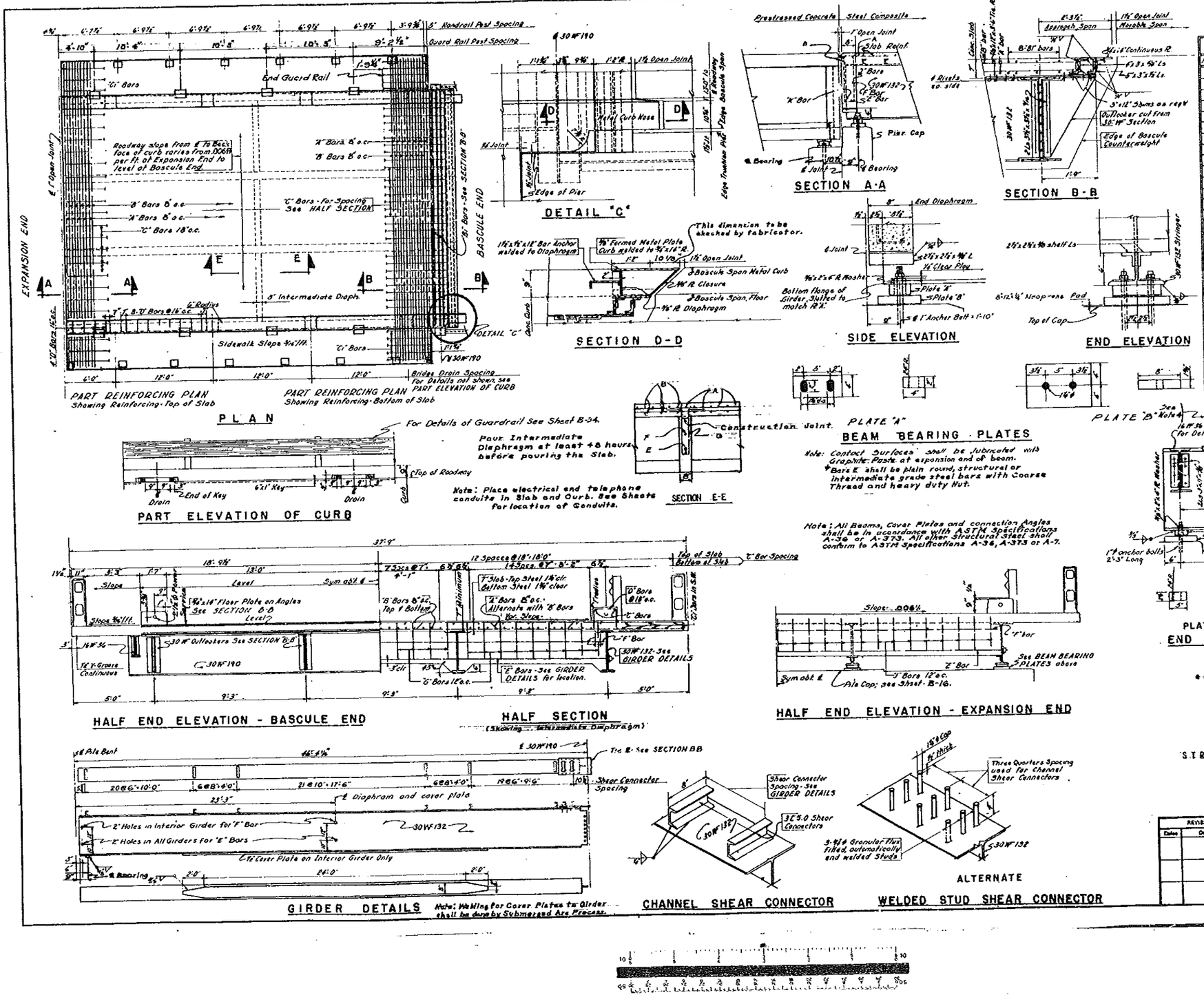

NOTES

1. Grout shall be 7/8" ϕ or High Tensile Bolts.
2. For General Notes see Sheet No B-1.
3. See Estimated Bridge Quantities. The estimated Quantity of Structural Steel for one Steel Flanking Span is 55,200 ✱ ✱
4. If Welded Stud Shear Connector Alternate is selected, 4-3/4" ϕ studs shall be paid for as 8" of SCS.0 Shear Connectors.
5. All Neoprene Pads to be included in Contract Unit Price for Structural Steel (Steel Flanking Span, Ladders & Platforms).
6. Bill of Reinforcing Steel and Estimated Quantities are for one Span.

STRUCTURE A STEEL FLANKING SPAN

STATE ROAD DEPARTMENT OF FLORIDA
BRIDGE DIVISION

BRIDGES BETWEEN ESTERO ISLAND AND BONITA BEACH

REVISIONS Date	Description	ROAD NO.	COUNTY	PROJECT NO.
		S-865	LEE	12530-3153

	Name	Date
Detailed by	G.C.L.	7-67
Checked by	L.H.	8-67
Quantities by	L.H.-V.	9-67
Checked by	N.B.	9-67
Traced by	G.C.L.	7-67

APPROVED BY

Drawing No. 36 of 60 | Index No. 7700

BX1-135

BX1-135

BX1-136

BX1-136

FED. ROAD DIV. NO.	STATE	PROJECT NO.	FISCAL YEAR	SHEET NO.
3	FLA.	12530-3153	'63	B-55

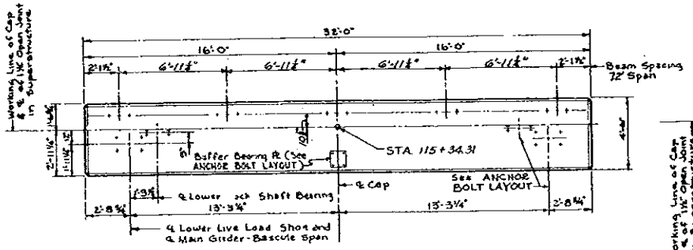

PLAN OF CAP

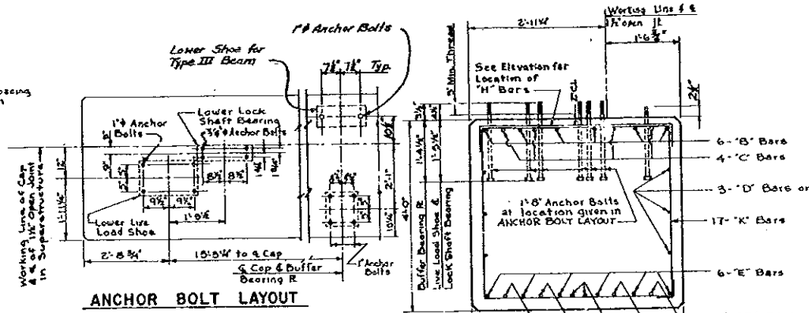

ANCHOR BOLT LAYOUT

SECTION A-A

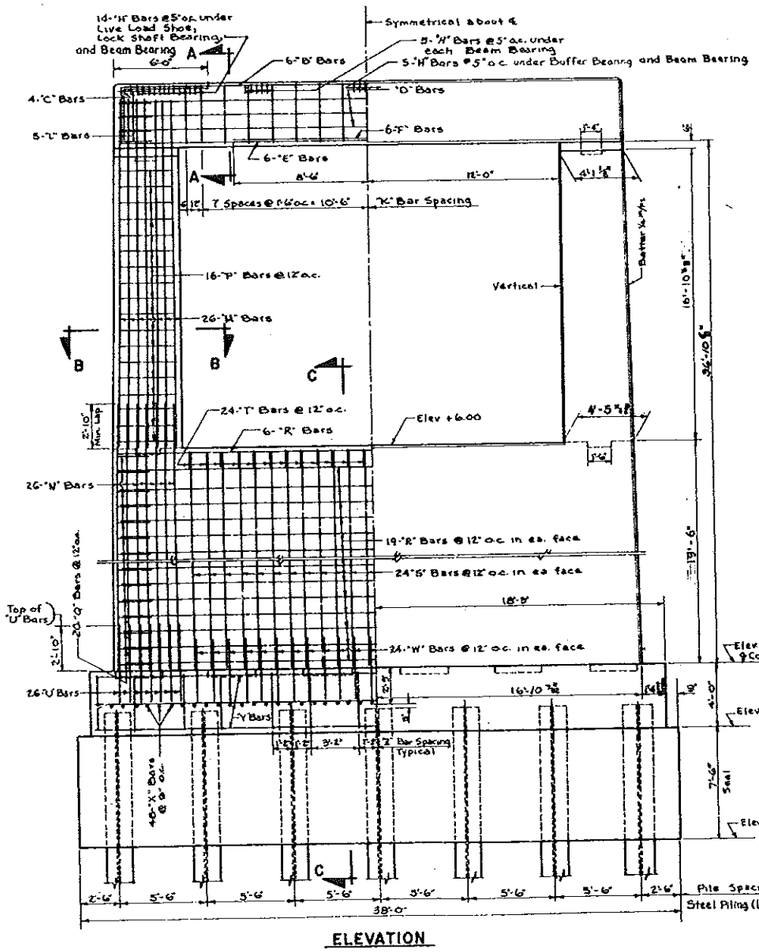

ELEVATION

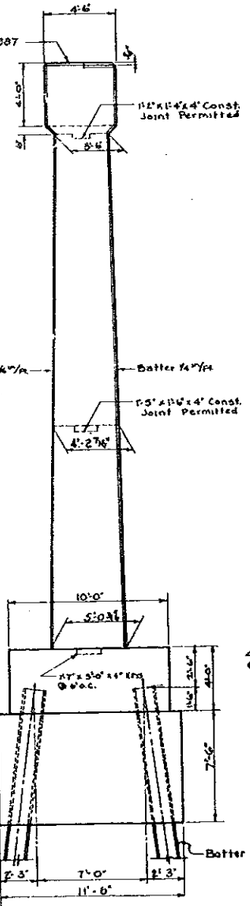

END ELEVATION

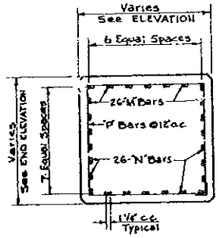

SECTION B-B

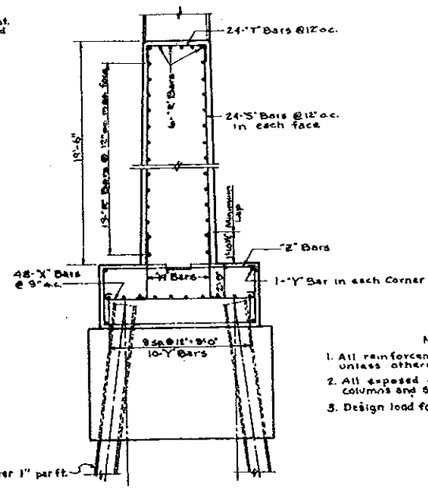

SECTION C-C

BILL OF REINFORCING STEEL

MARK	SIZE	No. REQ'D	LENGTH	LOCATION	BENDING
B	9	6	36'-1"	Top of Cap	See Diagram
C	9	8	8'-1"	Top of Cap	See Diagram
D	6	6	31'-6"	Sides of Cap	Straight
E	10	6	31'-6"	Bottom of Cap	Straight
F	10	6	17'-0"	Bottom of Cap	Straight
H	4	43	5'-0"	Top of Cap	See Diagram
K	5	17	16'-2"	Cap Stirrups	See Diagram
L	6	10	8'0"	End of Cap	See Diagram
M	9	52	20'-5"	Column	Straight
N	9	52	22'-4"	Column	Straight
P	5	32	Varies - See Detail Avg = 18'-3"	Column Stirrups	See Diagram
Q	3	40	Varies See Detail Avg = 8'-1¼"	Col. Sides at Strut	See Diagram
R	5	44	32'-6"	Strut	Straight
S	6	48	19'-3"	Strut	Straight
T	6	24	5'-9"	Top of Strut	See Diagram
U	9	52	5'-7"	Dowels in Footing	See Diagram
W	6	48	4'-8"	Dowels in Footing	See Diagram
X	6	48	13'-10"	Footing	See Diagram
Y	6	14	54'-0"	Footing	Straight
Z	6	14	26'-8	Footing Stirrups	See Diagram

BENDING DIAGRAMS

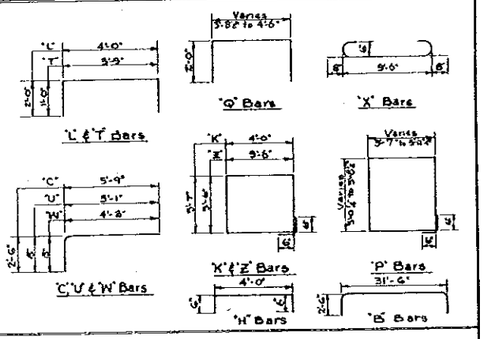

ESTIMATED QUANTITIES

ITEM	UNIT	QUANTITY
Class A Concrete (Trunnion Pier & Rest Pier)	Cu. Yd.	207.43
Seal Concrete	Cu. Yd.	120.81
Reinforcing Steel	Lb.	17,961
Steel Piling Furnished (14BP73)	Lin. Ft.	*
Steel Piling Driven (14BP73)	Lin. Ft.	*

* For Piling Quantity, see Estimated Bridge Quantities on Sheet B-1.

Notes

1. All reinforcement to have 3" cover unless otherwise noted.
2. All exposed outside edges of cap, columns and strut to be chamfered 1½"x1½".
3. Design load for piles: 55 Tons.

STRUCTURE "A" - REST PIER I-E

STATE ROAD DEPARTMENT OF FLORIDA
BRIDGE DIVISION

BRIDGES BETWEEN ESTERO ISLAND AND BONITA BEACH

REVISIONS		ROAD NO.	COUNTY	PROJECT NO.
Date	Description	S-865	LEE	12530-3153
1-63	Ty Strip on Cap Seat			

	Name	Date
Detailed by	W.P.	1-61
Checked by	R.E.N.	4-61
Quantities by	R.E.N.	4-61
Checked by	N.W.B.	4-61
Traced by		

APPROVED BY: T. W. Lewis, Assistant State Highway Engineer

Drawing No. 37 of 60 | Index No. 7700

BX1-136

BX1-137

BX1-137

FED. ROAD DIV. NO.	STATE	PROJECT NO.	FISCAL YEAR	SHEET NO.
3	FLA	12530-3153	'63	B-39

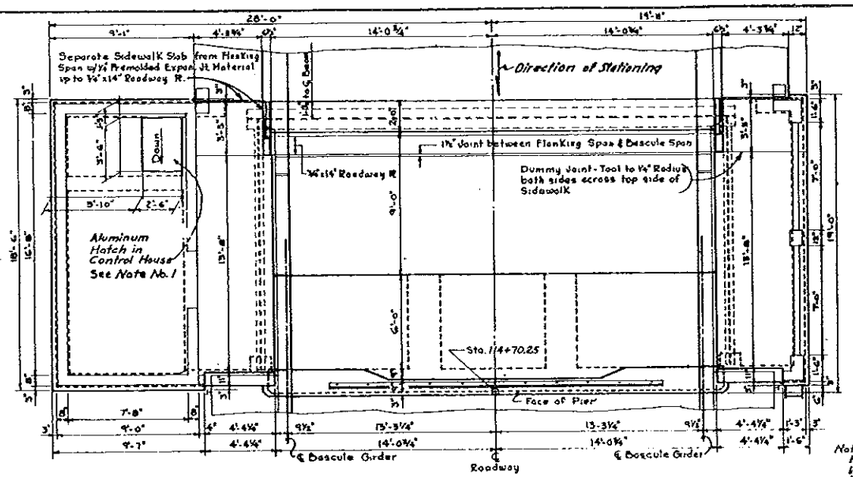

PLAN OF PIER

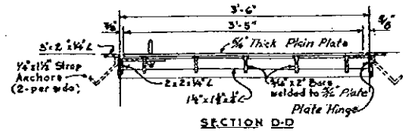

SECTION D-D

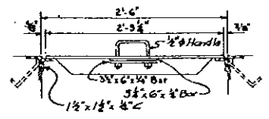

SECTION E-E

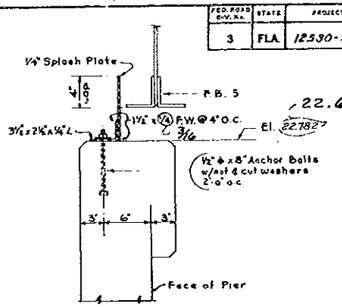

SECTION F-F

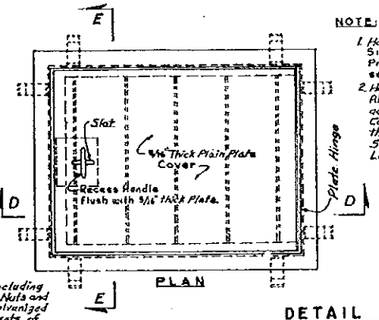

PLAN

DETAIL "Y"

NOTE:

1. Hatch located in Control House: Size of Slab opening 3'-6" x 2'-6". Provision shall be made to hold cover securely while in open position
2. Hatch Cover and Frames shall be Aluminum Alloy 6061-T6 Fabricated according to the details shown. Hatch Cover and Frames shall be included in the Contract Lump Sum Price for Structural Steel (Flanking Spans, Ladders and Platforms).

Note: All Steel for Ladders including Plates, Straps, Bars, Bolts, Nuts and Washers shall be hot dip galvanized in accordance with requirements of A.S.T.M. Specification Designation A-123. Pickling of parts shall be done prior to galvanizing.

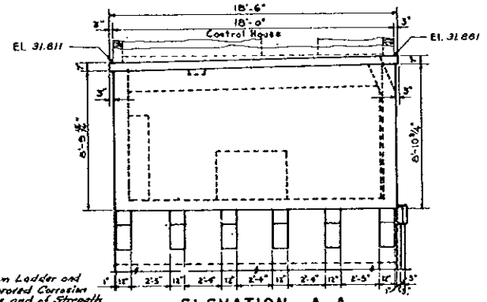

ELEVATION A-A

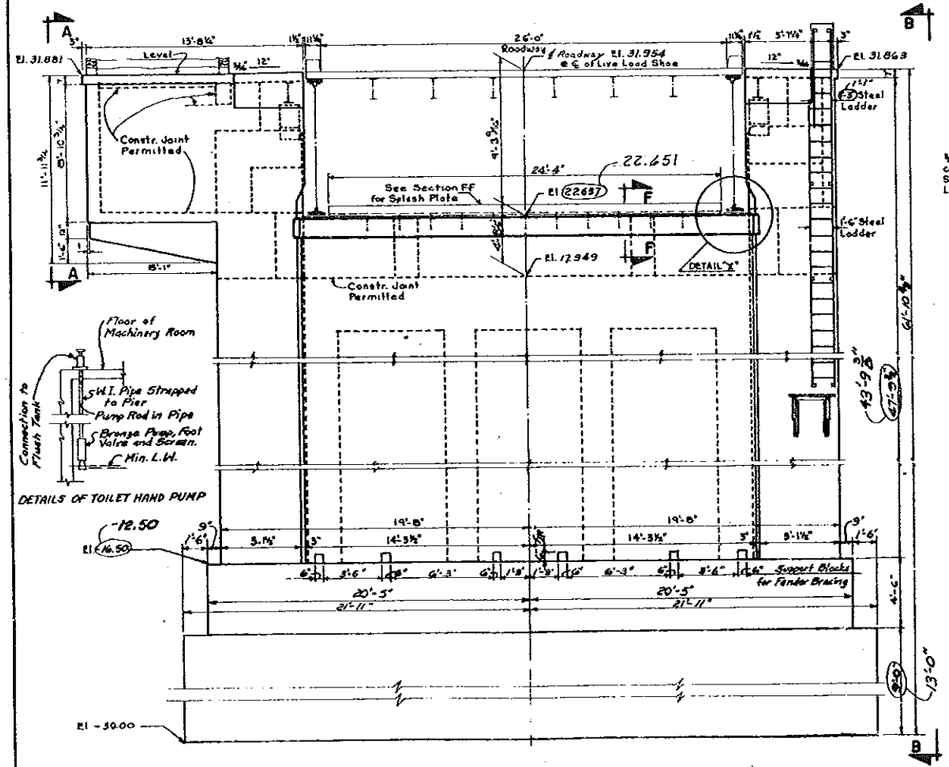

FRONT ELEVATION

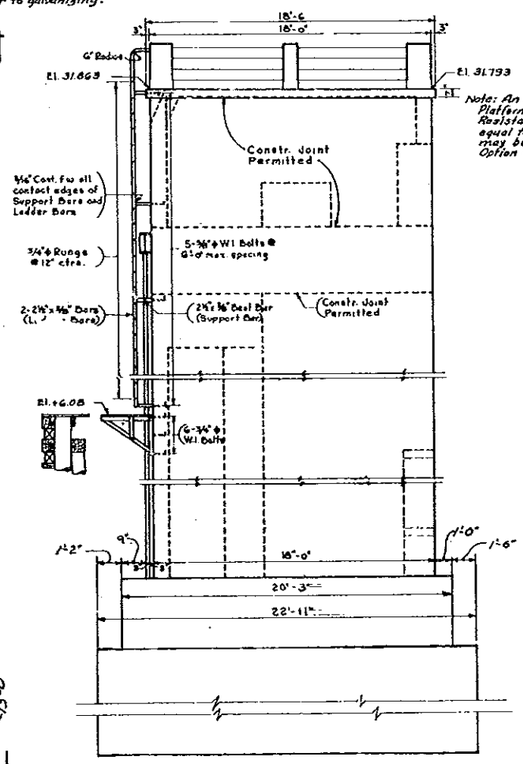

ELEVATION B-B

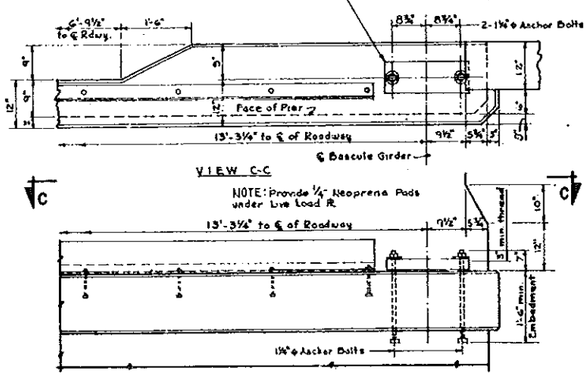

DETAIL "X"

STRUCTURE A

TRUNNION PIER - GENERAL LAYOUT

STATE ROAD DEPARTMENT OF FLORIDA
BRIDGE DIVISION

BRIDGES BETWEEN ESTERO ISLAND AND BONITA BEACH

REVISIONS		ROAD NO.	COUNTY		PROJECT NO.
Date	Description	S-865	LEE		12530-3153
1-64	Plan Changes & Revised Quantities Due to Revised Bridge Rail Details		Names	Date	APPROVED BY
		Details by	J.L.P.	1-61	T. W. Lewis
		Checked by	A.L.T.	2-61	Assistant State Highway Engineer
		Quantities by			
		Checked by			Drawing No. 36 of 60
		Traced by			Index No. 7700

BX1-137

BX1-137

BX1-138

BX1-138

FED. ROAD DIV. NO.	STATE	PROJECT NO.	FISCAL YEAR	SHEET NO.
3	FLA.	12530-3153	'63	B-40

Direction of Stationing

Provide Fastener

See DETAIL "Y" for Hatch

Bottom of Concrete Beam

1½" ϕ Std Pipe Rail (Both Sides)

Concrete Curb across Door Opening

See Note No. 2 for Door and Frame

See Note No. 3 for Plumbing

¾" ϕ Dowels @ 18" o.c.

Bottom of Pipe El. + 1.0

Note: Stairs shall be pin connected top and bottom in a manner to provide for easy removal.

SECTION K-K

Provide 6.0 Sq. Ft. of Free Area, Metal Louvers in Doors

Steel Stairway 2'-2" wide

Conc. Beams

Steel Ladder

Control Panels

Steel Wall Partition

Provide 12.3 Sq. Ft. of Free Area, Metal Louvers in Partition and Door

Note: Pads 3" high shall be Poured under Control Panels and Engine Generator Unit

See Note No. 5

15'-0" ϕ Reaction to ϕ Bearing 30 WF End Beam

ϕ Trunnion

1½" ϕ Pipe Rail

Steel Ladder

Face of Pier

Note: Install Toilet Hand Pump. Cost of Pump to be included in the Contract Lump Sum Price for Control House.

PLAN BELOW ROADWAY

Symm about ϕ Roadway

Provide Oak Bumper Blocks (Payment to be made at Contract unit price for Structural Timber)

Edge of Machinery Platform

Footing Line

Seal Line

SECTION J-J (REVOLVED 90°)

Note: Pipe Rails and Ladders shall be included in Contract Lump Sum Price for Structural Steel (Steel Flanking Spans, Ladders and Platforms).

Note: See Sheet B-39 for details of toilet hand pump.

6" ϕ Discharge Pipe attached to Pier.

Control House

For Details of Steel Wall Partition see Sheet B-48.

Steel Stairway

Dbl. Alum. Drs. 5'-4"x6'-8" opening

Toilet

Steel Wall Partition

Steel Ladder

1½" ϕ Std Pipe Rail

Pump ϕ 12" o.c.

Constr. Jt. Permitted

Construction Joints Permitted

Elev. +4.00

Bott. of Pipe, El. +2.00

Note: One additional Horizontal Construction Joint will be permitted above Elev. +2.00 or below Elev. -5.00

SECTION G-G

SECTION F-F

Steel Ladder

Bm Bear'g Bracket

Provide White Oak Bumper Blocks Cut to Fit

Flange of Girder

SECTION H-H

#10 Dowels 3'-0" long-1'-6" in Seal-1'-6" in Footing

PLAN OF BASCULE PIER FOOTING (Showing Dowel Locations)

1. For General Notes see Sheet B-1.
2. Double Aluminum Panel Door 5'-4" x 6'-8", as Manufactured by V.E. Anderson Mfg. Co., Bradenton, Fla., or equal. The door shall be provided with elastomeric Vinyl Weatherstripping and be equipped with an inside lock and safety chain. Door and frame shall be aluminum and equipped with hardware suitable for use over salt water and according to the manufacturer's recommendations. Cost of complete door, hardware and safety chain shall be included in the Contract Lump Sum Price for Control House.
3. Install Toilet: Cost of installation shall be included in the Contract Lump Sum Price for Control House. The Toilet shall be a Crane Co. Bowl "Sylonite" Tank "3-560 Non-Sag" salt water fitted or equal.
4. Center 24'-0" of Pipe Rail on Machinery Platform to be 3'-0" high remaining 3'-11½" on each side to be 2'-0" high to clear rack.
5. 30 WF 180 End Girder Bearing Plates to be provided with 2-1" ϕ Anchor Bolts with 5" min. Thread, 1'-6" min. embedment and with 9" min. Extension above top of concrete.
6. The Elevations shown on Pier Drawings for Machinery Supports and Trunnion Bearing may be changed after Machinery and Main Girder are detailed.

STRUCTURE A

TRUNNION PIER - GENERAL LAYOUT

STATE ROAD DEPARTMENT OF FLORIDA
BRIDGE DIVISION

BRIDGES BETWEEN ESTERO ISLAND AND BONITA BEACH

REVISIONS		ROAD NO.	COUNTY	PROJECT NO.
Dates	Descriptions	S-865	LEE	12530-3153
1-64	Max. Allowable Seal Elevation Increased, Footing Depth 6'-6" Min. Retained.	Designed by	Karen J.L.P.	Dates 1-61
1-64	Plan of Footing Showing Dowels Added.	Checked by	R.L.T.	2-61
		Quantities by		
		Checked by		
		Traced by		

APPROVED BY

Engineer State Highway Engineer

Drawing No. 39 of 60

Index No. 7700

BX1-138

BX1-139

BX1-139

FED. ROAD DIV. NO.	STATE	PROJECT NO.	FISCAL YEAR	SHEET NO.
3	FLA.	12530-3153	'63	B-41

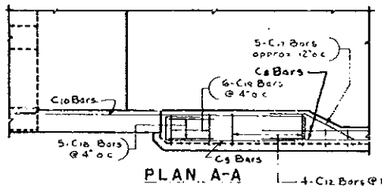

PLAN A-A

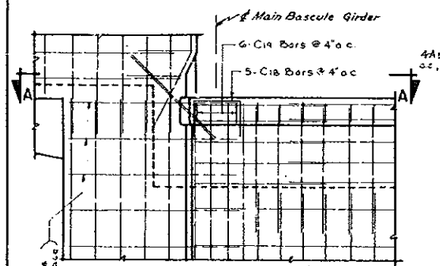

ELEVATION AT LIVE LOAD SHOE

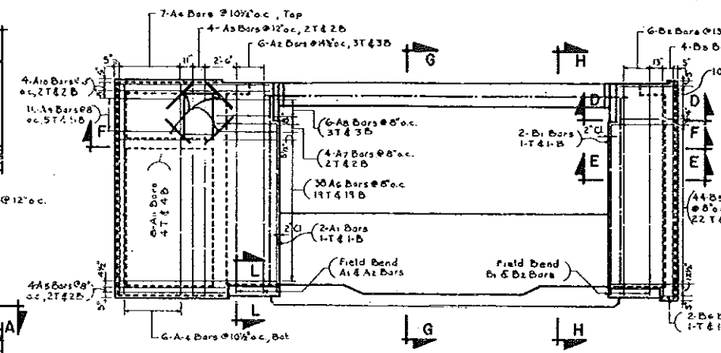

PLAN SHOWING TOP SLABS

NOTE: For SECTIONS F-F, G-G, H-H & L-L; See Sheet No. B-42.

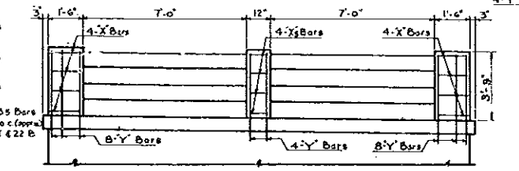

ELEVATION B-B

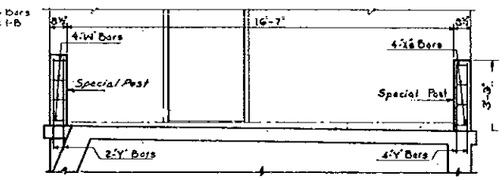

ELEVATION C-C

Handrail Notes:
1. All handrail and handrail posts on Trunnion Pier, including special posts at Control House, shall be paid for at the Contract Unit Price for Concrete Handrail.
2. For details of handrail not shown, see sheet No. B-33.

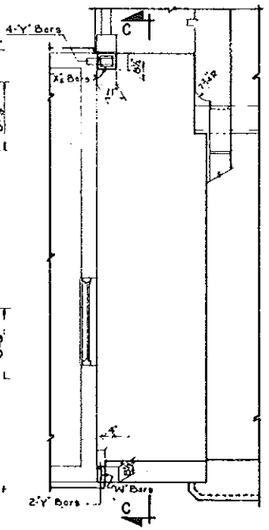

PLAN SPECIAL POSTS

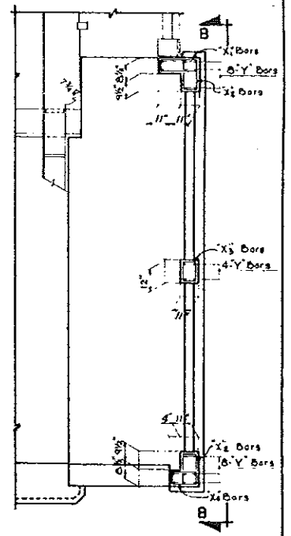

PLAN HANDRAIL POST

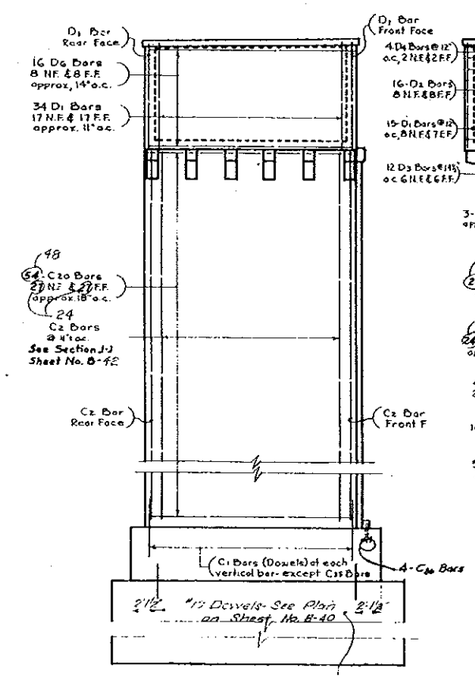

LEFT SIDE ELEVATION

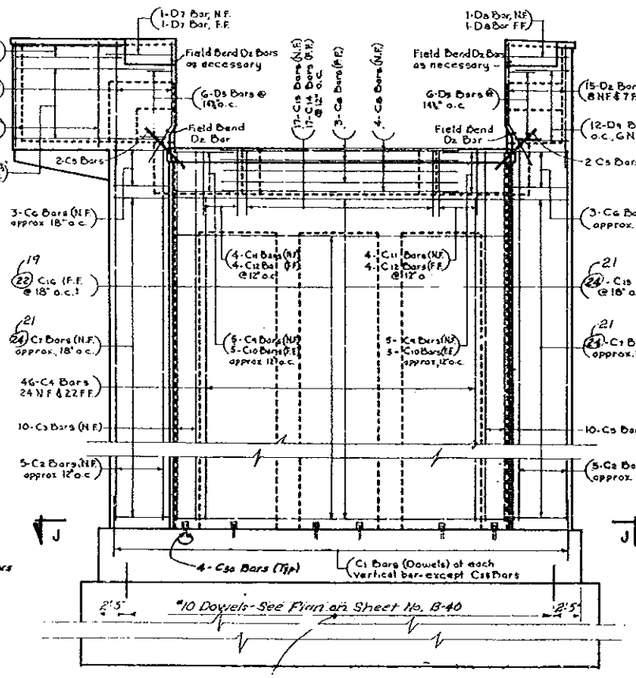

FRONT ELEVATION

NOTE: For SECTION J-J, see Sheet No. B-42

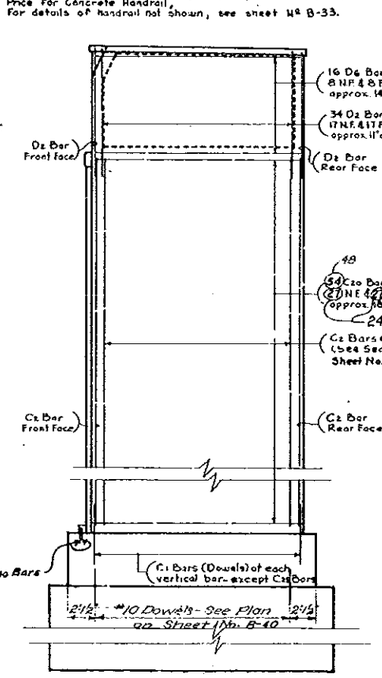

RIGHT SIDE ELEVATION

Note: Dowels (#10) 3'-0" long imbedded in Snail 1'-6" and on 2'-0" centers according to Specification 320.91 as shown on Sheet No B-40.

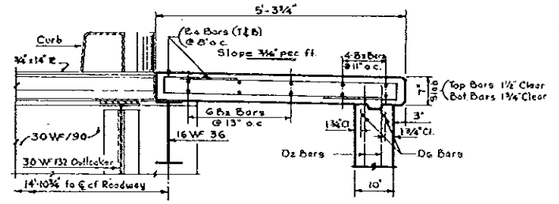

SECTION D-D

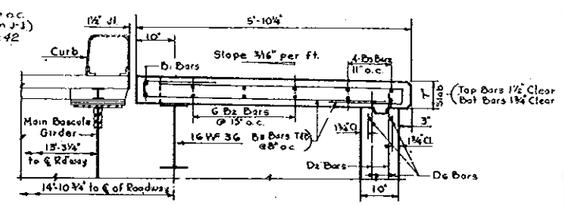

SECTION E-E

STRUCTURE A

TRUNNION PIER - REINFORCING DETAILS

STATE ROAD DEPARTMENT OF FLORIDA
BRIDGE DIVISION

BRIDGES BETWEEN ESTERO ISLAND AND BONITA BEACH

REVISIONS		ROAD NO.	COUNTY	PROJECT NO.
Date	Descriptions	S-865	LEE	12530-3153
1-64	Piles Removed Seal depth increased	Marked	Date	APPROVED BY
1-64	Dowels added between Seal and Footing	Detailed by	J.L.P. 1-61	
		Checked by	R.L.T. 2-61	
		Quantities by		
		Checked by		
		Traced by		

Drawing No. 40 of 40 | Index No. 7700

BX1-139

BX1-139

BX1-140

BX1-140

FED. ROAD DIST. NO.	STATE	PROJECT NO.	FISCAL YEARS	SHEET NO.
3	FLA.	12530-3153	63	B-42

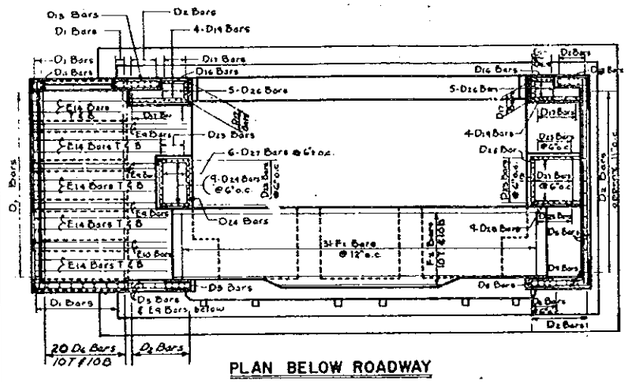

PLAN BELOW ROADWAY

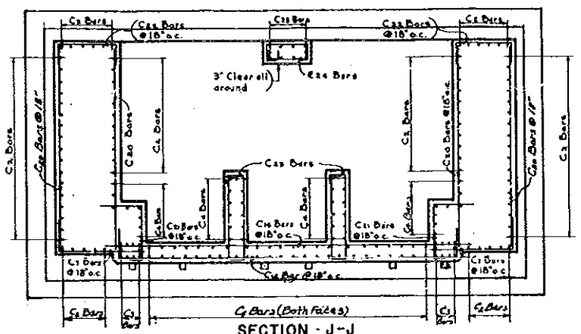

SECTION - J-J

NOTE: For location of SECTION J-J, see Sheet No. B-41.

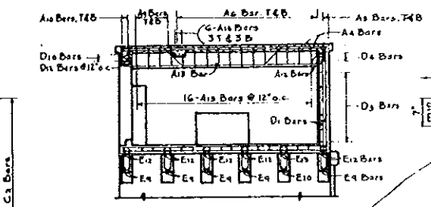

SECTION K-K

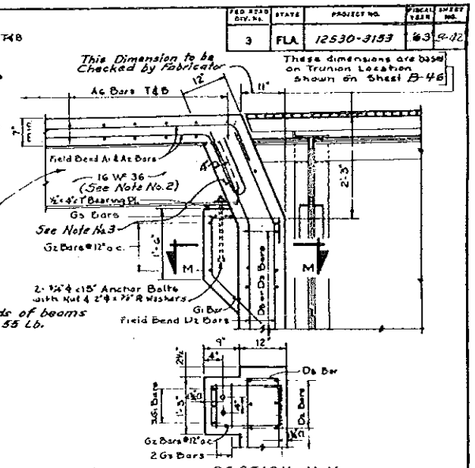

SECTION M-M

SECTION L-L

NOTE: For location of SECTION L-L, see Sheet No. B-41.

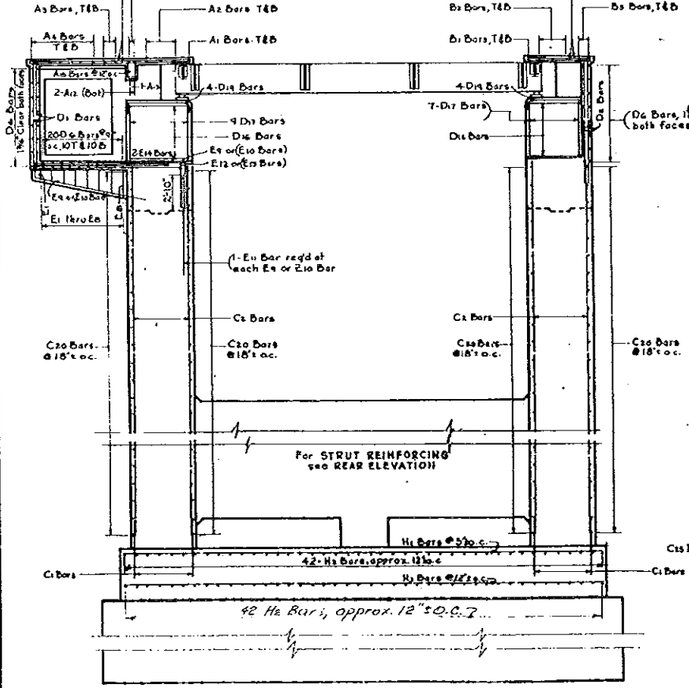

SECTION F-F

NOTE: For location of SECTION F-F, see Sheet No. B-41.

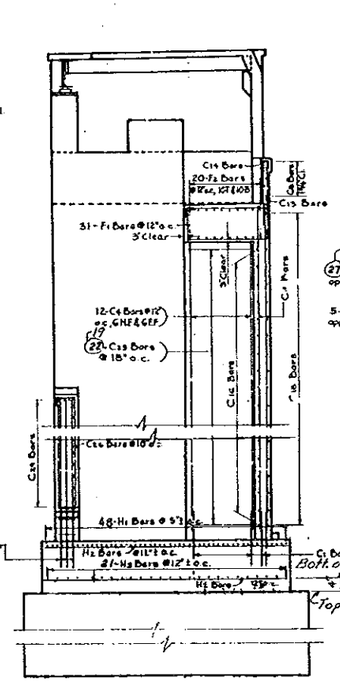

SECTION G-G

NOTE: For location of SECTION GG, see Sheet No. B-41.

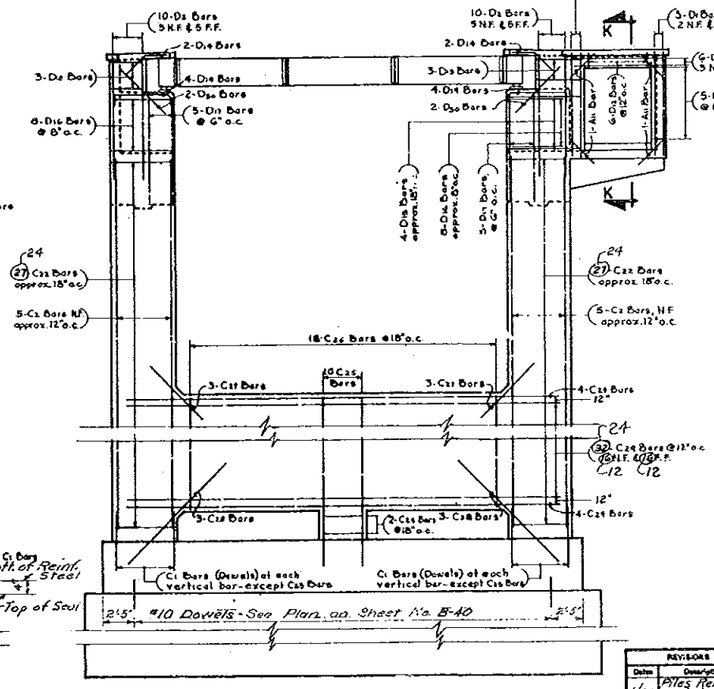

REAR ELEVATION

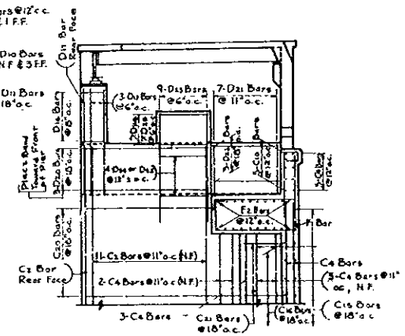

PART SECTION H-H

NOTE: For location of PART SECTION H-H, see Sheet No. B-41.

Notes: 1. Use D26 Bars shown above instead of D25 Bars, as indicated, on Control House side.
2. Wrap end of 16 WF 36 Beam with two layers of 55 lb. Smooth Roofing.
3. Cut or bend D1 Bar at 16 WF 36 Beam, as required.

STRUCTURE A

TRUNNION PIER REINFORCING DETAILS

STATE ROAD DEPARTMENT OF FLORIDA
BRIDGE DIVISION

BRIDGES BETWEEN ESTERO ISLAND AND BONITA BEACH

REVISIONS		ROAD NO.	COUNTY	PROJECT NO.
Date	Description	S-865	LEE	12530-3153
1/64	Piles Removed, Seal depth increased		Name	Date
1-64	Dowels Added between Seal and Footing	Detailed by	J.L.P.	1-61
		Checked by	R.L.T.	2-61
		Quantities by		
		Checked by		
		Traced by		

APPROVED BY

Assistant State Highway Engineer

Drawing No. 41 of 60

Index No. 7700

BX1-140

BX1-140

BX1-141

FED. ROAD DIV. No.	STATE	PROJECT No.	FISCAL YEAR	SHEET No.
3	FLA	12530-3153	'63	E-43

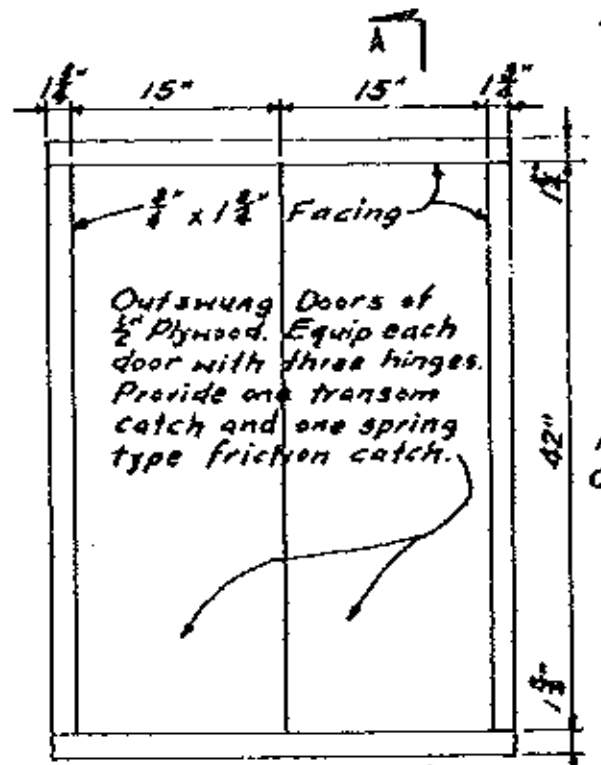

FRONT VIEW

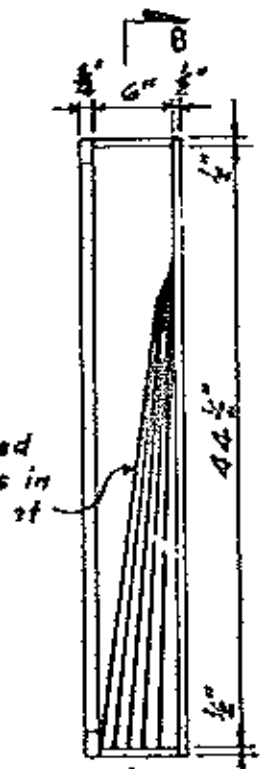

SECTION A-A

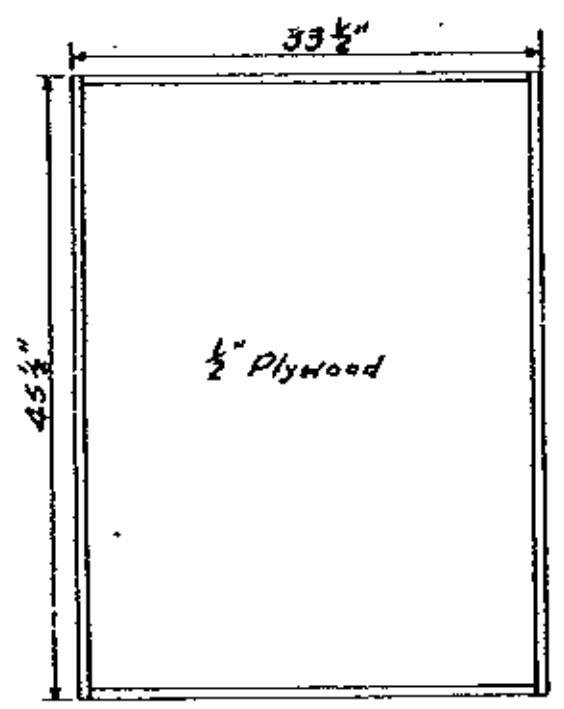

SECTION B-B

DETAILS OF CABINET FOR WIRING DIAGRAMS AND LUBRICATION CHARTS

Cabinet to be mounted on wall in Machinery Room as directed by the Engineer.

Wiring Diagrams and Lubrication Charts shall be mounted on ¾" Plywood and Varnished.

All exterior and interior surfaces shall be painted with two coats of dark green commercial paint of the best grade.

HANDRAIL POST REINFORCING DETAILS *

MARK	SIZE	No. REQ'D	LENGTH	BENDING	LOCATION
W	2	4	6"	Straight	4"x8½" Spec. Post
X1	2	4	4'-11"	See Diagram	End Post
X2	2	8	4'-8"	↕	End Posts
X3	2	4	3'-8"		Intermediate Post
X4	2	4	3'-9"		End Post
X5	2	4	3'-1"		11'x8½" Spec. Post
Y	5	26	3'-8"	See Diagram	All Posts

BENDING DIAGRAMS

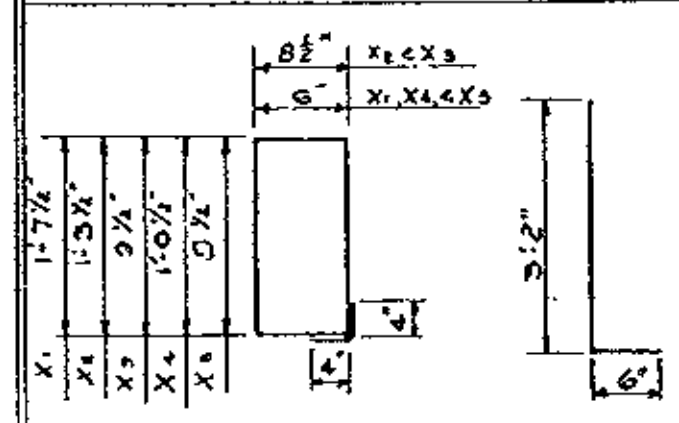

'X' BARS 'Y' BARS

* Cost of Handrail Post Reinforcing Steel to be included in the Contract Unit Price for Concrete Handrail

ESTIMATED QUANTITIES

ITEM	UNIT	QUANTITY
Class A Concrete (Trunnion Pier (Rest Pier))	Cu. Yd.	(634) 593
Structural Steel (Flanking Span, Ladders and Platforms)	Lump Sum	**
Seal Concrete	Cu. Yd.	(348) 484
Reinforcing Steel	Lb.	37,950 (40,090)
Steel Piling Furnished (14BP73)	Lin. Ft.	***
Steel Piling Driven (14BP73)	Lin. Ft.	***
Concrete Handrail	Lin. Ft.	21

** See Estimated Bridge Quantities on sheet No. B-1 (The estimated quantity of Structural Steel in Trunnion Pier is 4200 lbs.).

*** See Estimated Bridge Quantities, Sheet No. B-1.

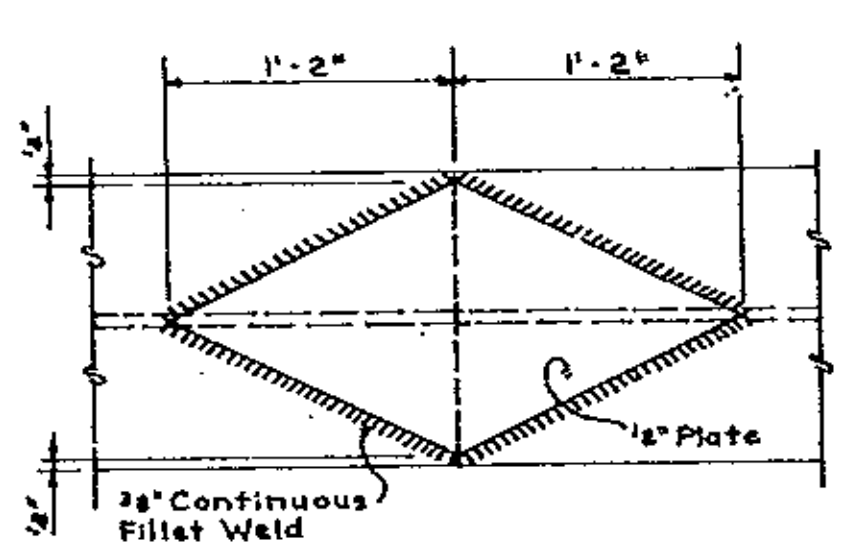

NOTE: Splice Plates may be cut from a Steel Pile Section.

SECTION A-A

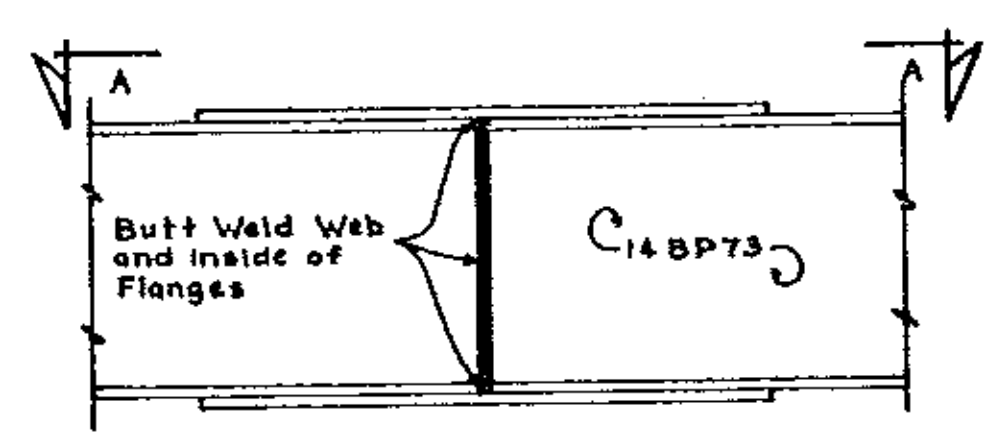

DETAIL OF STEEL PILE SPLICE

BILL OF REINFORCING STEEL

BENT BARS

MARK	SIZE	No. REQ'D	TYPE	DIMENSIONS A	B	C	D	LENGTH	LOCATION
A1	4	2	②	14'-1"	4"	6"	—	14'-7"	Sidewalk at Control House
A2	4	6	②	17'-6"	4"	6"	—	18'-0"	Sidewalk at Control House
A3	4	4	②	13'-4"	4"	6"	—	13'-10"	Control House Floor
A4	4	13	②	18'-0"	4"	6"	—	18'-6"	Control House Floor
A5	4	4	②	9'-1"	4"	6"	—	9'-7"	Control House Floor
A6	4	38	②	13'-5"	4"	6"	—	13'-11"	Control Hse. Fl. and Sidewalk
A7	4	4	②	5'-2"	4"	6"	—	5'-8"	Sidewalk at Control House
A8	4	6	②	4'-8"	4"	6"	—	5'-2"	Sidewalk at Control House
A9	4	10	②	5'-4"	4"	6"	—	5'-10	Control House Floor
A10	4	4	②	12'-10"	4"	6"	—	13'-4"	Control Hse. Fl. and Sidewalk
A12	8	4	⑦	—	—	—	—	19'-8"	Control Hse. Floor Beam
A13	8	1	①	—	—	—	—	18'-10"	Control Hse. Floor Beam
A15	3	16	⑥	9"	1'-8½"	4"	4"	5'-7"	Control Hse. Floor Beam
B1	4	2	②	14'-1"	4"	6"	—	14'-7"	Sidewalk
B2	4	6	②	17'-6"	4"	6"	—	18'-0"	↕
B3	4	4	②	17'-9"	4"	6"	—	18'-3"	
B4	4	10	②	4'-10"	4"	6"	—	5'-4"	
B5	4	44	②	5'-3"	4"	6"	—	5'-9"	
B6	4	2	②	1'-2"	4"	6"	—	1'-8"	Sidewalk
C6	5	6 (42)	⑨	2'-9"	7'-6"	—	—	9'-4"	Front Pier Wall
C7	5	(46)	⑨	2'-9"	7'-1"	—	—	9'-10	↕
C9	5	10	⑦	5'-4"	1'-1"	1'-6"	—	8'-4	
C10	5	10	④	10'-6"	1'-1"	1'-6"	—	13'-1"	
C13	5	8	⑪	1'-5"	6'-6"	7"	—	9'-2"	
C14	4	17	⑪	8"	6'-6"	7"	—	8'-5"	
C15	5	(24) 41	④	2'-6"	28'-5"	2'-6"	—	33'-5	Front Pier Wall
C17	4	10	⑤	1'-6"	2'-8	—	—	4'-2"	Live Load Shoe Wall
C18	4	10	④	1'-6"	2'-0"	1'-6"	—	5'-0"	Live Load Shoe Wall
C19	4	12	⑪	1'-5"	1'-0"	1'-0"	—	4'-1"	Live Load Shoe Wall
C21	5	(44) 38	④	1'-0"	4'-6"	1'-7"	—	9'-1"	Pier Wall, Inside Corner
C22	5	(54) 48	④	1'-4"	5'-6"	1'-4"	—	8'-6"	Rear Pier Wall
C23	5	(14) 38	⑥	1'-6"	7'-8"	8"	8"	18'-4"	Pilasters
C24	5	2	⑥	1'-4½"	3'-6"	8"	8"	11'-4"	Strut
C26	5	16	⑭	1'-6"	(17'-0") 15'-0"			(40'-0") 32'-0"	Strut
D1	4	56	④	9"	8'-11"	9"	—	10'-5"	Wall below Control House
D3	4	12	⑨	2'-3"	13'-2"	—	—	15'-5"	Wall below Control House
D4	4	4	⑨	2'-3"	9'-0"	—	—	11'-3"	Wall below Control House

MARK	SIZE	No. REQ'D	TYPE	DIMENSIONS A	B	C	D	LENGTH	LOCATION
D5	4	12	④	2'-3"	8"	2'-3"	—	5'-2"	Front Wall below Sidewalk
D9	4	12	⑨	2'-3"	4'-6"	—	—	6'-9"	Front Wall below Sidewalk
D10	6	6	⑨	1'-6"	10'-9"	—	—	12'-3"	Rear Wall over Platform Door
D11	4	5	⑩	10"	11"	—	—	4'-3"	Wall Corner next to Door
D12	4	6	⑥	8"	1'-6"	6"	6"	5'-4"	Rear Wall over Platform Door
D13	4	3	⑥	8"	3'-9"	6"	6"	9'-10"	Rear Wall below Sidewalk
D14	5	4	⑫	2'-0"	2'-0"	—	—	4'-0"	Rear Wall, Corner of wall & S.W.
D15	4	4	⑥	8"	6'-5"	6"	6"	14'-10"	Rear Wall below Sidewalk
D16	4	16	⑥	1'-9"	4'-9"	6"	6"	14'-0"	Flanking Span Beam Pedestal
D18	4	3	⑩	2'-1"	2'-8"	—	—	7'-9"	Rear Wall below Sidewalk
D19	4	8	⑧	—	—	—	—	7'-1"	Flanking Span Beam Pedestal
D20	5	6	⑨	3'-6"	10'-6"	—	—	14'-0"	Inner Pier Wall
D22	5	6	④	1'-6"	7'-6"	1'-6"	—	9'-0"	Inner Pier Wall
D24	4	11	⑥	4'-6"	2'-9"	6"	6"	14'-6"	Trunnion Pedestal
D25	4	11	⑥	4'-6"	4'-9"	6"	6"	18'-6"	Trunnion Pedestal
D26	4	10	④	1'-0"	1'-11"	1'-0"	—	3'-11"	Flanking Span Beam Pedestal
D27	4	14	④	1'-0"	4'-2"	1'-0"	—	6'-2"	Trunnion Pedestal
D28	4	9	④	1'-0"	4'-10"	1'-0"	—	6'-10"	Trunnion Pedestal
D29	4	9	④	1'-0"	2'-11"	1'-0"	—	4'-11"	Trunnion Pedestal
E1	3	6	⑥	7½"	1'-5"	4"	4"	4'-9"	Bracketed Platform
E2	3	6	⑥	7½"	1'-7½"	4"	4"	5'-2"	↕
E3	3	6	⑥	7½"	1'-9½"	4"	4"	5'-6"	
E4	3	6	⑥	7½"	1'-11½"	4"	4"	5'-10"	
E5	3	6	⑥	7½"	2'-1½"	4"	4"	6'-3"	
E6	3	6	⑥	7½"	2'-4½"	4"	4"	6'-7"	
E7	3	6	⑥	7½"	2'-6½"	4"	4"	7'-0"	
E8	3	6	⑥	7½"	2'-8½"	4"	4"	7'-4"	
E9	7	10	⑬	12'-11"	—	—	—	28'-7"	
E10	7	2	⑬	11'-2"	—	—	—	26'-10"	
E12	8	10	⑨	4'-3"	12'-9"	—	—	17'-0"	
E13	8	2	⑨	4'-3"	11'-3"	—	—	15'-6"	Bracketed Platform
F1	5	31	⑭	2'-1"	7'-0"	—	—	22'-4"	Machinery Platform
G1	6	6	⑤					4'-1	Bracket
G2	3	4	⑥	10"	1'-4½"	4"	4"	5'-1"	Bracket
G3	4	4	④	6"	11"	6"	—	1'-11"	Bracket

STRAIGHT BARS

MARK	SIZE	No. REQ'D	LENGTH	LOCATION
A11	4	12	3'-0"	Corner of openings
A14	5	6	8'-11"	Beam Control House Floor
C1	5	186	5'-0"	Dowels at Footing
C2	5	78	(35'-2") (39'-2")	Pier Walls
C3	5	20	(34'-11") (38'-11")	Front Pier Wall below L.L.S.
C4	5	88	(30'-11") (34'-1")	Front Pier Wall
C5	5	4	5'-0"	Front Pier Wall at L.L.S.
C8	4	7	20'-4"	Front Pier Wall
C11	5	8	6'-6"	Front Pier Wall
C15	4	17	6'-6"	Front Pier Wall
C16	5	(22) 19	3'-0"	Front Pier Wall
C20	5	(108) 96	11'-6"	Pier Wall Sides
C25	6	10	(22'-9") 18'-9"	Strut
C27	6	6	6'-6"	Strut
C28	6	6	12'-0"	Strut
C29	6	(40) 22	37'-0"	Strut
C30	4	24	1'-5"	Front of Pier on Footing
D2	4	82	10'-9"	Pier Walls below Sidewalk
D6	4	52	17'-6"	Pier Wall sides & Bracketed Platform
D7	4	2	5'-10"	Front Pier Wall at Sidewalk
D8	4	2	5'-5"	Front Pier Wall at Sidewalk
D17	5	31	10'-1"	Flanking Span Bm. Pedestal
D21	5	14	7'-10"	Inner Pier Wall
D23	5	49	9'-0"	Trunnion Pedestal
D30	5	4	5'-6"	Flanking Span Beam Pedestal
E11	8	12	8'-6"	Bracketed Platform
E14	4	20	11'-4"	Bracketed Platform
F2	8	20	38'-0"	Machinery Platform
H1	10	48	40'-4"	Footing
H2	6	84	19'-9"	Footing
H3	6	21	40'-4"	Footing

BENDING DIAGRAM TYPES

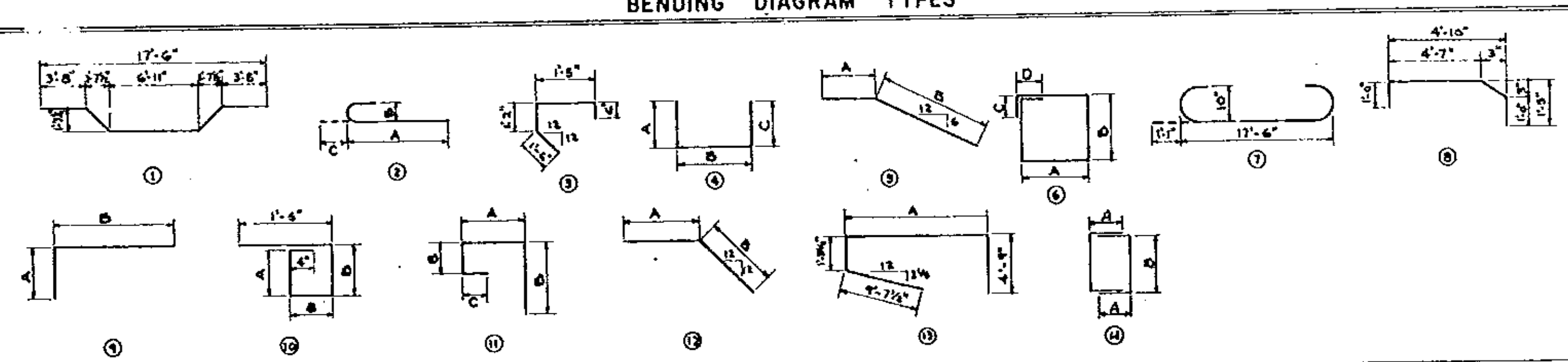

Note: At the option of the Contractor, Bars C2, C3 and C4 may have a 1'-6" (min.) lap splice immediately above the construction joint permitted at Elev. +5.00 or Elev. -5.00 if the construction joint is used.

TRUNNION PIER - BILL OF REINFORCING STEEL

STRUCTURE A

STATE ROAD DEPARTMENT OF FLORIDA
BRIDGE DIVISION

BRIDGES BETWEEN ESTERO ISLAND AND BONITA BEACH

ROAD NO.	COUNTY	PROJECT NO.
5-865	LEE	12530-3153

REVISIONS Date	Descriptions
1/64	Piles Removed, Seal depth increased

	Names	Dates
Detailed by	J.L.P.	1-61
Checked by	R.L.T.	2-61
Quantities by	J.L.P.	2-61
Checked by	R.L.T.	2-61
Traced by		

APPROVED BY: [signature]

Drawing No. 42 of 60 — Index No. 7700

BX1-141

BX1-142

BX1-142

FED. ROAD DIV. No.	STATE	PROJECT No.	FISCAL YEAR	SHEET NO.
3	FLA.	12530-3153	63	B-42

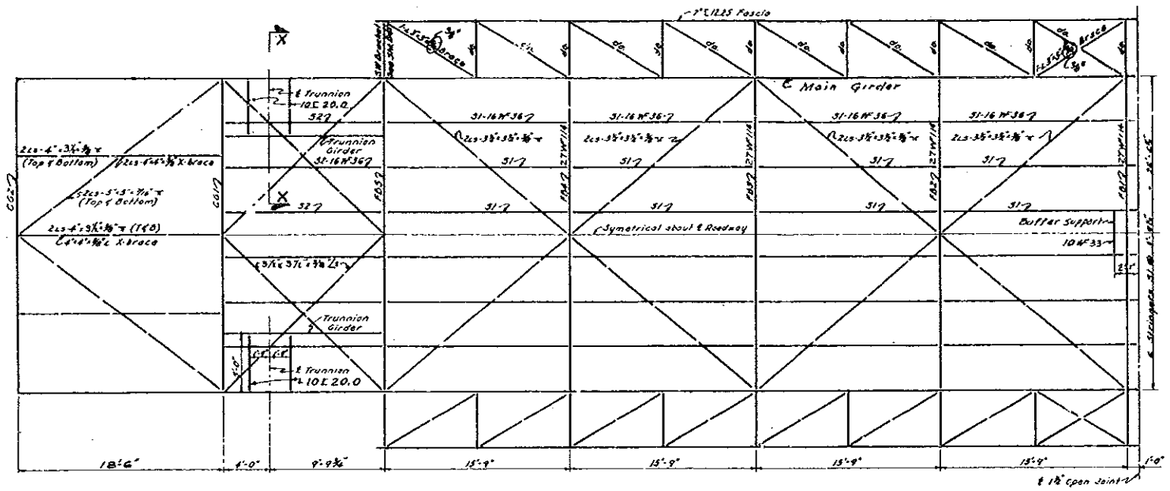

FRAMING PLAN

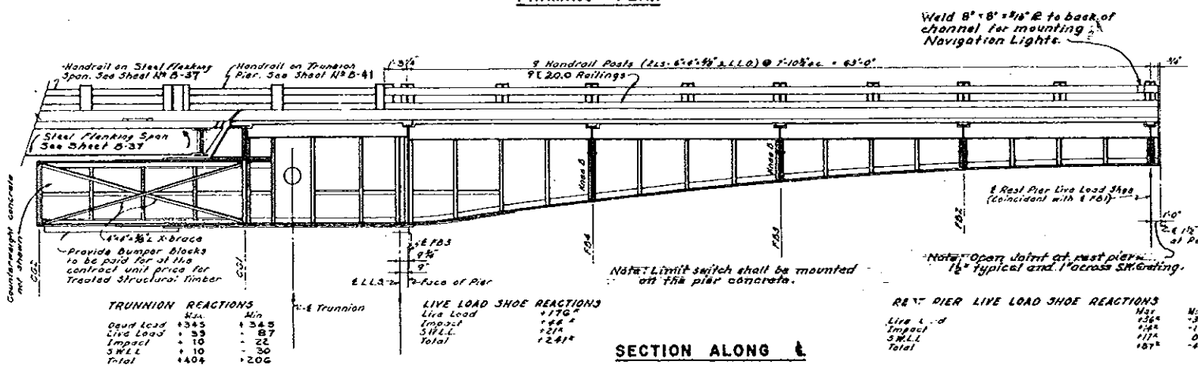

SECTION ALONG ℄

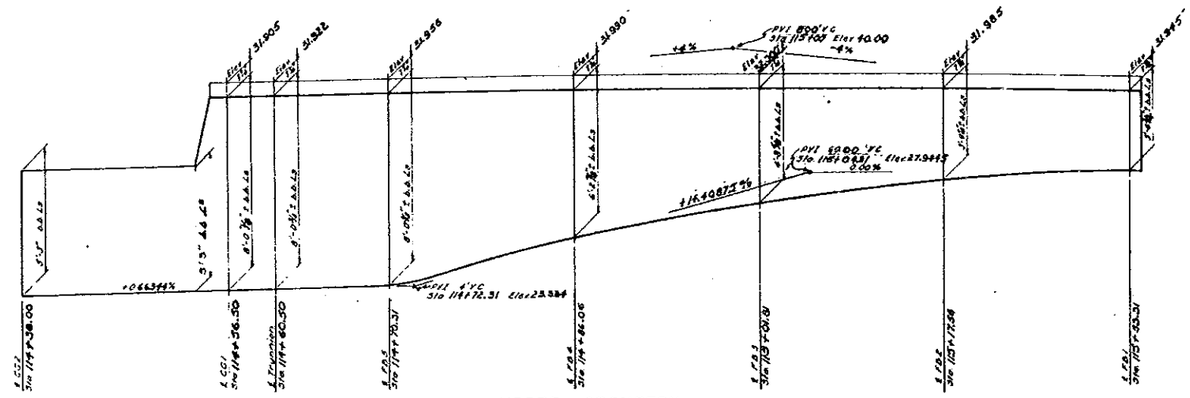

GIRDER GEOMETRY

STRESSES IN MAIN GIRDERS

POINT	SHEAR IN KIPS D.L.	L.L.	IMP.	S.W.	REV.	D.L.+ 20% L.L.	D+L+I	MAX	SHEAR STRESS	MOMENTS IN KIPS - FT. D.L.	L.L.	IMP.	S.W.	REV.	D.L.+ 20% L.L.	D+L+I	MAX	S.M. REQ'D	SECT. PROVIDED	I GROSS	I NET	S.M. GROSS	S.M. NET	STRESS COMP.	STRESS TENS.
FB1										-0.2 -0.2	+6 0	-5 0	—	0	-0.3 -0.3	-2.2	-2.2	147							
	+15.0 0	+2.0 +43.7	-0.6 11.3	0 -12.0		+ 8.8	+18.0 0	-75.8	-75.8	5.0															
FB2										-206 -129	-31 +57.9	-10 +14.5	0 +2.11	± 125	-250 -155	+93.1	+93.1	620.7							
	+32.1 +27.1	+18.8 -28.7	+6.6 -8.0	0 -6.4		± 8.0	+38.5 +32.5	-64.5	-64.5	3.8															
FB3										-622 -494	-62 +64.5	-19 +21.1	0 -30.3	± 367	-683 -593	+123.2	+123.2	821							
	+49.7 +44.7	+36.7	+11.0	+8.1	—		+59.6 +53.6	-105.5	-105.5	5.0															
FB4										-1367 -1126	-274 +79.7	-82 +19.9	-87 +27.6	± 48	-1640 -1351	-185.8	-185.8	2400							
	+68.5 +63.5	+52.2	+14.5	+15.1	—		+82.2 +76.2	-150.3	-150.3	4.7															
FB5										-2466 -2054	-259 +43.7	-215 +10.9	-351 +13.0	—	-2842 -2465	-379.2	-379.2	2528							
	+20.9 +15.9	+6.43	+11.61	+2.09	—		+34.51 +29.91	-222.2	-222.2	5.3															
L.L.S.										-2457 -2148	-298 +40.1	-224 -10.0	-368 +12.0	—	-2960 -2578	-395.7	-395.7	2638							
	+12.61 +12.1	+9.23 -9.3	+3.1 -2.5	+3.3	—		+17.13 +14.53	-20.48	-20.48	6.5															
℄ Trun.										-3578 -3214	-14.2 0	-4.5 0	0 0	—	-4894 -3857	-376.3	-429.4	2862.7							
	-83.92	-39.5	-11.9	—	—	-107.4	-139.08	-107.4	8.5																
CG1										2235	—	—	—	—	2682	—	2682								
	-12.40	—	—	—	—	-14.4	-17.24	-14.4	5.3																
CG2										—	—	—	—	—	—	—	—								

STRESSES IN BEAMS, GIRDERS AND STRINGERS

S1	0.9	18.5	5.0	—	—	1.1	22.4	22.4	4.8	3.5	47.8	14.3	—	—	4.2	65.6	65.6	437	16 W 36	4463	—	563	—	14.0	14.0
S2	1.8	16.0	4.8	—	—	2.2	22.6	22.6	4.8	6.1	42.4	12.7	—	—	7.3	61.2	61.2	408	16 W 36	4463		563		13.1	13.1
FB1-4	6.9	43.8	13.1	—	—	8.3	63.8	63.8	4.1	50.6	27.7	81.6	—	—	60.8	403.8	403.8	2700	27 W 114	4080	—	299	—	16.2	16.2
FB5	46.7	39.3	11.9	—	—	56.1	57.7	97.7	2.7	258	267.6	86.3	—	—	310	631.8	631.8	4208	6"Ø 1/2" bb ℄ 7/16" WEB 2 ℄ 4"x 3 1/2"x 3/8"	61064	39036	1057	808	7.2	9.4
CG1	216.0	48.2	13.1	—	—	259.2	274.3	274.3	6.3	1295	306.2	89.8	—	—	1553	1691	1691	11270	15"x 3/4" bb ℄ 7/16" WEB 2 ℄ 6"x 4"x 3/4"	104301	88000	2080	1743.0	9.8	11.7
CG2	129.8	—	—	—	—	155.4	—	155.4	—	97.1	—	—	—	—	116.4	—	116.4	777	9"x 3/8" bb ℄ 3/8" WEB 4"x 3"x 5/16" x 3/4"	29433	24568	936	780	15.0	17.92
Trun. Girder	85.8	9.4	2.7	—	—	103.0	97.7	103.0	4.02	34.7	37.7	10.8	—	—	41.6	39.6	41.6	277	15"x 7/8" bb ℄ 5/8" WEB 2-℄ 5"x 3 1/2"x 1/2"	25480	23320	773	707	6.5	7.1

ESTIMATED QUANTITIES

ITEM	UNIT	QUANTITY
Structural Steel (Bascule Leaf)	Lump Sum	*
Steel Roadway Floor (5" Deep)	Sq. Ft.	1788
Steel Roadway Floor (5" Deep, Armored)	Sq. Ft.	389
Steel Sidewalk Floor (11" Deep)	Sq. Ft.	525

*Approx 182,000 lbs; this does not include Structural Steel in Trunnion Pier.

NOTES

1. For General Notes see Sheet No. B-1.
2. If span is erected in closed position, counterweight shall be supported on falsework during pouring of concrete counterweight. If span is erected in open position, Girder CG2 shall be supported by falsework at ℄ and ¼ points during pouring of counterweight.
3. All rivets shall be ⅞" ø.
4. Reactions given are for one Girder.
5. Counterweight details shall be furnished with the Shop Plans. Provisions shall be made for movable blocks equal to 3½% under and 5% over the calculated weight. Blocks equal to 5% of the calculated weight shall be provided.
6. General reaming will be required for the Main Girders, Trunnion Girders, lateral girder at FB-5 and the Cat Girders. See Art. 320.11(g) of the Specifications.
7. For rivets passing through fills, see Art. 1.6.33 of the A.A.S.H.O. Specifications. All fills must be solid; rings not permitted.
8. WELDING: American Welding Society, Latest Edition.
9. STRUCTURAL STEEL: Structural steel for stringers, Floor Beams FB-1, FB-2 & FB-3; Flanges and web of Floor Beam FB-4; Flanges and web of Counterweight Girders CG-1 and CG-2 and Flanges and web of Main Girders shall conform to A.S.T.M. Specification A-36. All other steel shall be A.S.T.M. Specification A-36, A-373 or A-7.

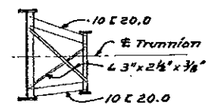

SECTION X-X

STRUCTURE A

BASCULE SPAN - FRAMING PLAN, GIRDER GEOMETRY AND STRESS SHEET

STATE ROAD DEPARTMENT OF FLORIDA
BRIDGE DIVISION

BRIDGES BETWEEN ESTERO ISLAND AND BONITA BEACH

REVISIONS Dates	Description	ROAD NO.	COUNTY	PROJECT NO.
1-64	Brace CG-Friendly Alter	S-865	LEE	12530-3153

	Name	Dates	APPROVED BY
Detailed by	W.M.G.	1-61	
Checked by	J.L.P.	1-61	
Quantities by	B.G.C.	8-58	
Checked by	J.E.S.	9-58	
Traced by	G.C.L.	7-57	Drawing No. 43 of 60
			Index No. 7700

BX1-142

BX1-142

BX1-143

BX1-143

FED. ROAD DIST. No.	STATE	PROJECT No.	FISCAL YEAR	SHEET No.
3	FLA.	12530-3153	63	D-45

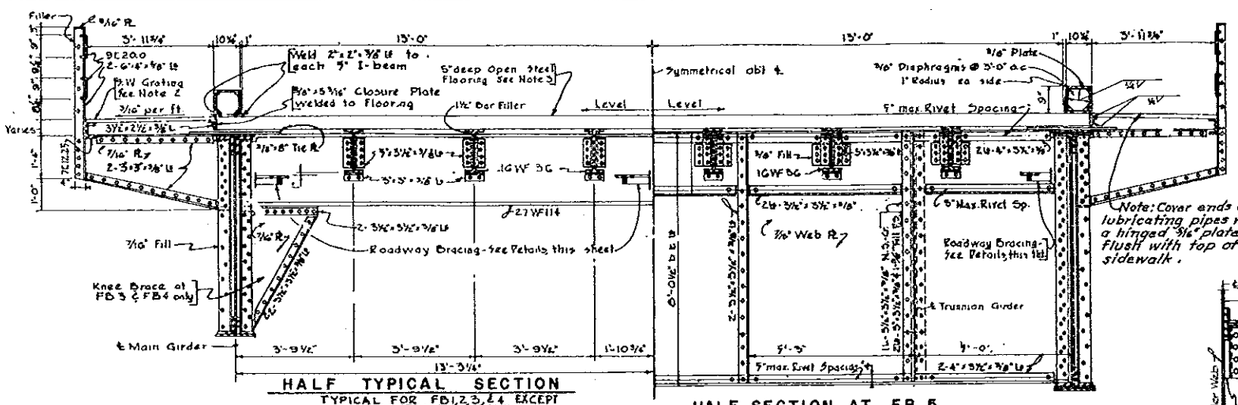

NOTES:

1. For General Notes, see Sheet No. B-1.
2. Sidewalk Grating shall be constructed with 1⅛"x⅜" bearing bars at not more than 1⅜" o.c.; secondary bars shall form rectangular, reticuline or U-shaped openings. Maximum clear size of any opening shall not exceed ⅝"x5".
3. 5" deep open steel deck shall be welded to stringers and bars in accordance with manufacturer's specifications.
4. Cost of Concrete in 5" deep Armored Steel Flooring shall be included in the Contract Lump Sum Price for Steel Roadway Floor (5" deep-Armored).
5. All steel shall be included in Contract Lump Sum Price for Structural Steel (Bascule Leaf), except steel flooring.
6. The use of ring fillers will not be permitted. All fillers shall be solid.
7. Cost of Concrete in 5" deep open steel deck over FB-5 shall be included in the Contract Lump Sum Price for Steel Roadway Floor.
8. Steel Roadway Floor shall have structural properties and riding properties equivalent to I-Beam Lok Flooring as manufactured by the Carnegie Steel Corp., Pittsburg, Pa.
9. Paint: See General Notes on Sheet No. B-1.

STRUCTURE A

BASCULE SPAN
SECTIONS AND BRACING

STATE ROAD DEPARTMENT OF FLORIDA
BRIDGE DIVISION

BRIDGES BETWEEN ESTERO ISLAND AND BONITA BEACH

REVISIONS		ROAD NO.	COUNTY	PROJECT NO.
Date	Description	S-865	LEE	12530-3153

	Name	Date
Detailed by	J.B.S.	7-57
Checked by	L.H.H.	8-57
Quantities by	B.G.C.	8-58
Checked by	J.B.S.	8-58
Traced by	J.B.S.	7-57

APPROVED BY: T. W. Jensen, Assistant State Highway Engineer

DRAWING NO. 44 of 60 | CONTRACT 7700

BX1-143

BX1-144

BX1-144

FED. ROAD DIV. No.	STATE	PROJECT NO.	FISCAL YEAR	SHEET NO.
3	FLA.	12530-3153	63	B-46

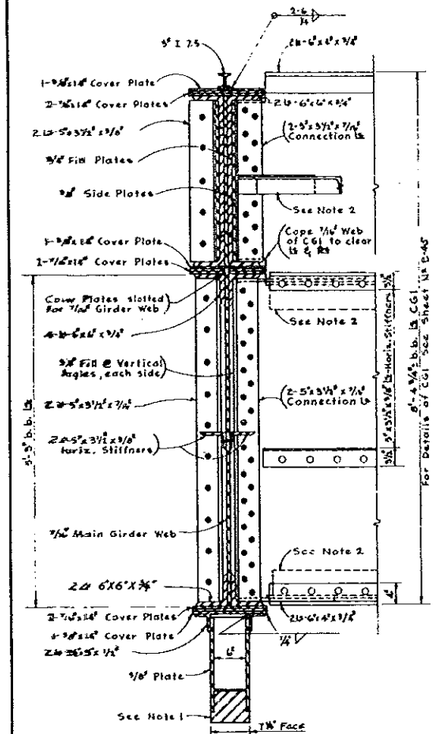

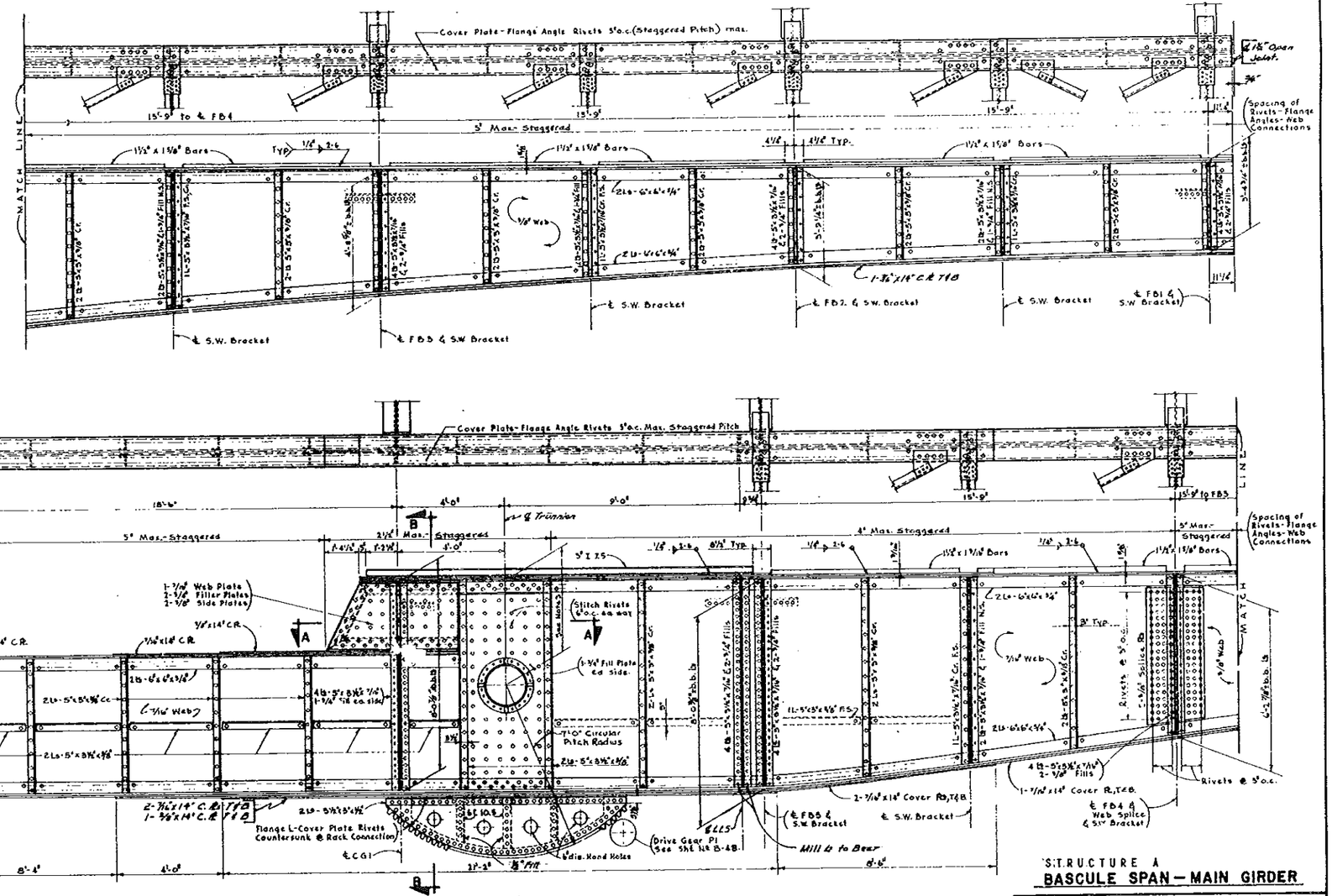

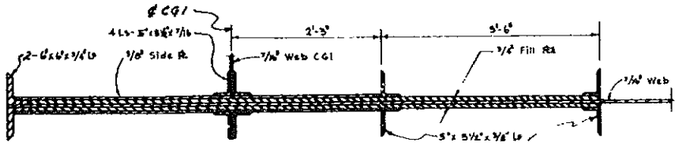

NOTES

1. All parts of rock shall be structural Steel except Teeth section, which shall be Cast Steel.
2. See Details of Bracing between CG1 & CG2 and between CG1 and FB5, see Sheet No B-45.
3. This dimension to be set by Contractor see Special Provisions. These plans based on the assumption that this dimension equals 4'-0"
4. For details of Trunnion Collar, see Sheet B-30.
5. All steel in Rock and Trunnion Collar shall be included in the Contract Lump Sum Price for Machinery and Castings. All other steel shall be included in Contract Lump Sum Price for Structural Steel (Basic Leaf)
6. Rivets shall be countersunk as required to provide smooth bearing for Live Load Shoes, etc.
7. For General Notes see Sheet No. B-1.

STRUCTURE A

BASCULE SPAN — MAIN GIRDER

STATE ROAD DEPARTMENT OF FLORIDA
BRIDGE DIVISION

BRIDGES BETWEEN ESTERO ISLAND AND BONITA BEACH

REVISIONS		ROAD NO.	COUNTY	PROJECT NO.
Date	Description	S-865	LEE	12530-3153

	Name	Date	APPROVED BY
Detailed by	P.S.	7-67	
Checked by	J.B.S.	7-67	
Quantities by	D.G.C.	8-68	
Checked by	J.E.S.	8-68	
Traced by	P.S.	7-67	

Drawing No. 45 of 60

Index No. 7700

BX1-144

BX1-145

BX1-145

FED. ROAD DIV. No.	STATE	PROJECT No.	FISCAL YEAR	SHEET No.
3	FLA	12530-3153	63	B-47

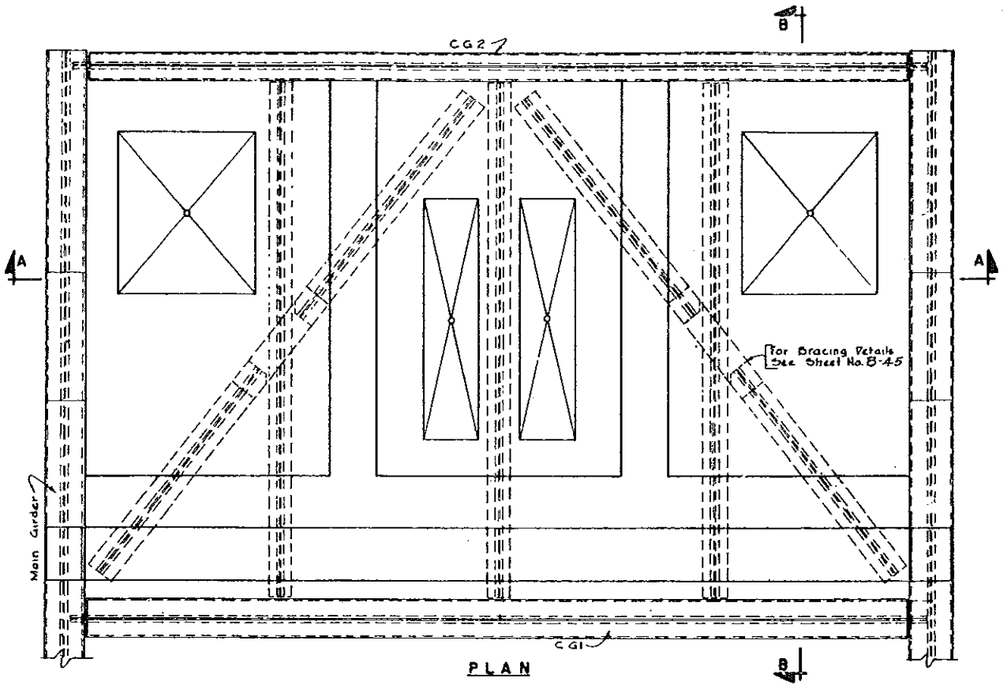

PLAN

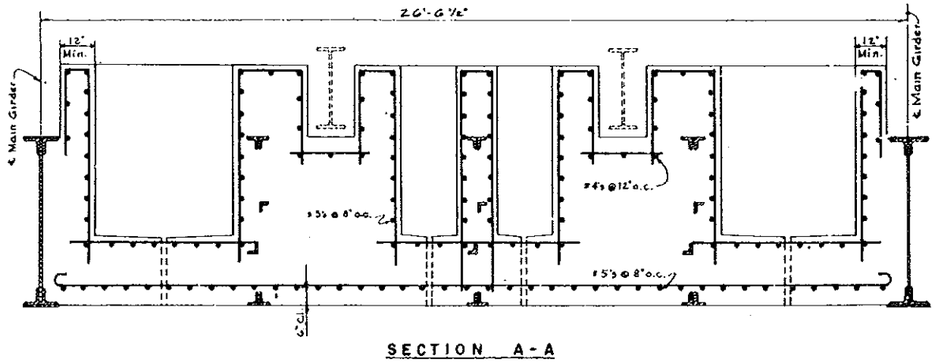

SECTION A-A

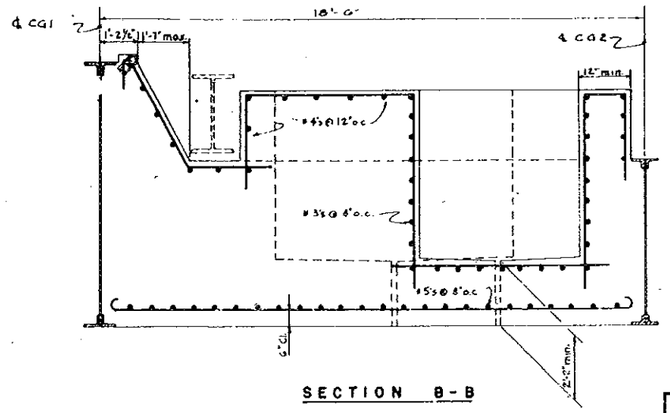

SECTION B-B

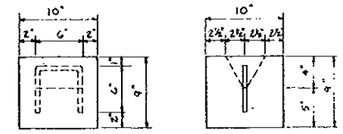

COUNTERWEIGHT BLOCK

Weight of one Block : 72 #

Blocks equal to 5 % of the calculated counterweight shall be provided. (370 ± Required)

ESTIMATED QUANTITIES

ITEM	UNIT	QUANTITY
*Class "A" Concrete (Counterweight)	Cu. Yd	115
Reinforcing Steel	Lb.	2,800

*140 Lb. per cu. ft.

NOTES:

1. For General Notes, see Sheet B-1.
2. All reinforcing shall have 3" cover unless otherwise noted.
3. Reinforcing: #5 bars at the bottom.
   #4 bars at the top.
   #3 bars at pockets.
4. Counterweight dimensions and center of gravity shall be checked by the Contractor using weight determined from approved shop plans. (See Section 330.6, Standard Specifications).
5. The Contractor shall be responsible for final balancing of the leaf. (See Section 330.6, Standard Specs).
6. This sheet is intended as a guide only, and is not to scale. Contractor will be required to submit shop drawings showing details of counterweight, and shall submit calculations showing balance of leaf. See Section 330.6 of the Standard Specifications.

STRUCTURE A

COUNTERWEIGHT - GENERAL DETAILS

STATE ROAD DEPARTMENT OF FLORIDA
BRIDGE DIVISION

BRIDGES BETWEEN ESTERO ISLAND AND BONITA BEACH

REVISIONS		ROAD NO.	COUNTY	PROJECT NO.
Date	Description	S-865	LEE	12530-3153

	Name	Date	APPROVED BY
Detailed by	R.A.H.	7-57	
Checked by	J.E.S.	7-57	
Quantities by	L.V.	8-58	
Checked by	B.G.C.	9-58	
Traced by	R.A.H.	7-57	

Drawing No. 46 of 60

Index No. 7700



BX1-145

BX1-145

BX1-146

FED. ROAD DIV. NO.	STATE	PROJECT NO.	FISCAL YEAR	SHEET NO.
3	FLA	12530-3153	63	B-48

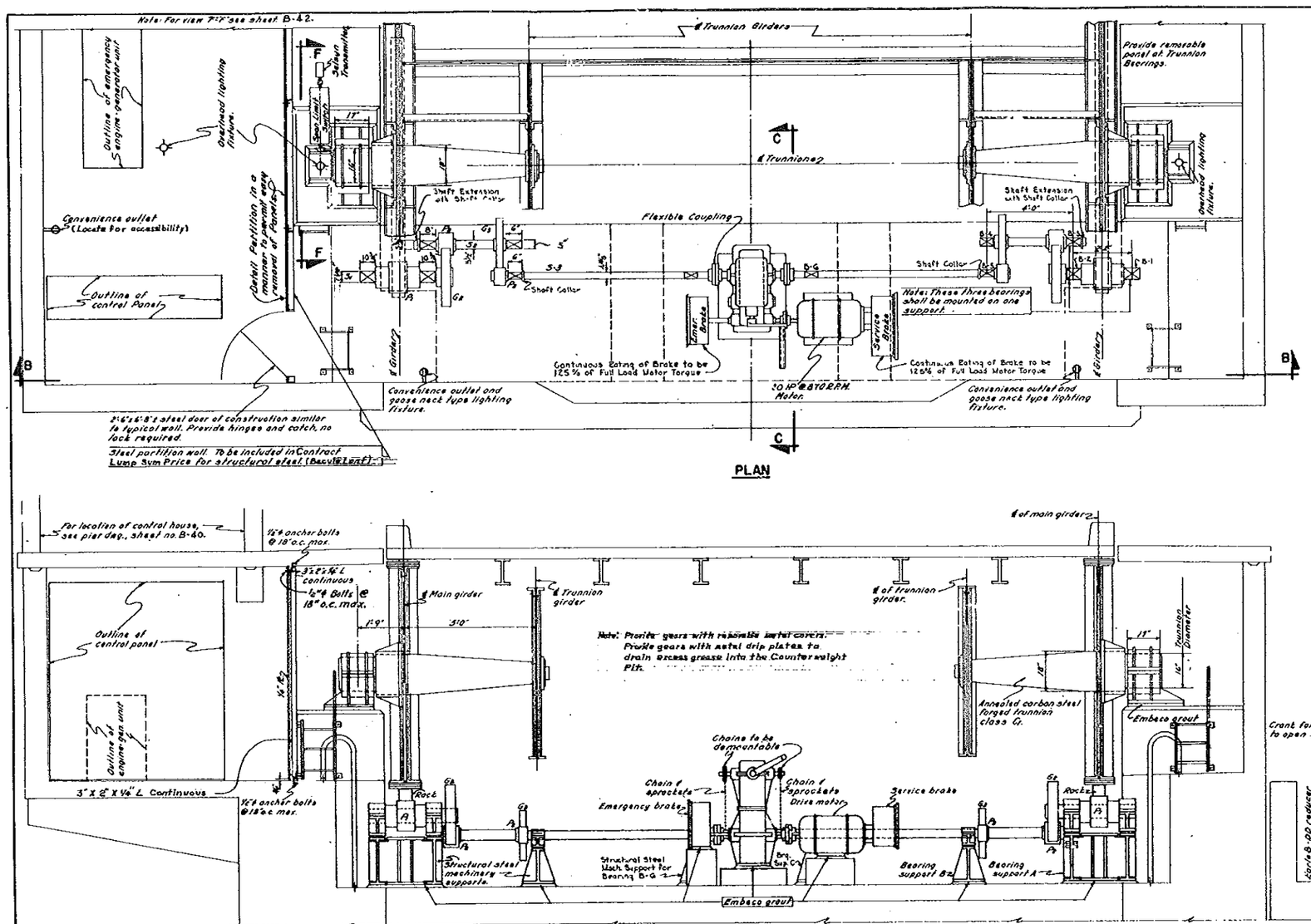

TABLE OF GEARS										
MARK	NO. REQ.	PITCH	NO. OF TEETH	PITCH DIAM.	FACE	MIN. HUB	BORE	KEY	MAT'L.	TEETH
Rack	2	3½" C.P.	—	168"	7¼"	—	—	—	C.S.	20° Inv.
P-1	2	3½" C.P.	14	15.597"	10½"	Intergral with S-1			F.S.	20° Inv.
G-2	2	1¼" D.P.	41	32.80"	5½"	9½"	7¼"	2-1¾"x1¾"	C.S.	20° Inv.
P-2	2	1¼" D.P.	15	12.0"		8¼"	5½"	1-1⅜"x1⅜"	F.S.	20° Inv.
G-3	2	1¾" D.P.	46	26.286"	4"	8¼"	3½"	2-1⅜"x1⅜"	C.S.	20° Inv.
P-3	2	1¾" D.P.	15	8.571"	5"	7"	4⅜"	1-1"x1"	F.S.	20° Inv.

-NOTES-

BUSHINGS: Bushings for lower half of trunnion bearings shall be Alloy "B" Bronze. Bushings for shafts S1, S2, & S3 shall be Alloy "C" Bronze. All other bearings shall be of babbit.

MACHINERY LAYOUT: This drawing is intended as a general machinery layout only and does not show all details, see Article 330.4 of Standard Specifications for Road and Bridge Construction.

MACHINERY SUPPORTS: Machinery supports shall be structural steel and the cost shall be included in the Contract Lump Sum Price for structural steel. (Bascule Leaf)

LEAF POSITION INDICATORS: Synchronous leaf position indicators shall be provided. (See Wiring Diagram).

SPECIFICATIONS: AASHO Standard Specifications for Movable Highway Bridges.

RACK: All teeth shall be Cut.

STRUCTURE A
BASCULE SPAN
MACHINERY LAYOUT

STATE ROAD DEPARTMENT OF FLORIDA
BRIDGE DIVISION

BRIDGES BETWEEN ESTERO ISLAND AND BONITA BEACH

REVISIONS		ROAD NO.	COUNTY		PROJECT NO.
Dates	Descriptions	S-865	LEE		12530-3153
6-64	Rack Tooth note		Names	Dates	APPROVED BY
		Detailed by	G.C.L.	11-67	
		Checked by	L.H.S.	11-67	
		Quantities by			Assistant State Highway Engineer
		Checked by			Drawing No. 47 of 60 / Index No. 7700
		Traced by	G.C.L.	11-67	

BX1-146

BX1-147

BX1-147

FED. ROAD DIV. No.	STATE	PROJECT No.	FISCAL YEAR	SHEET No.
3	FLA.	12530-3153	63	B-49

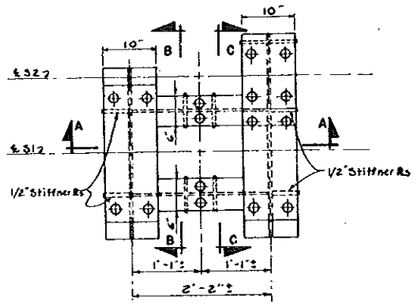

PLAN

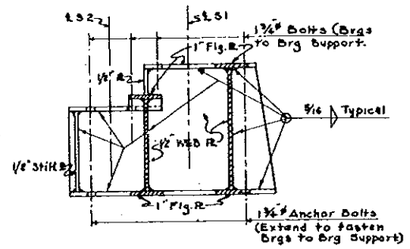

SECTION C-C

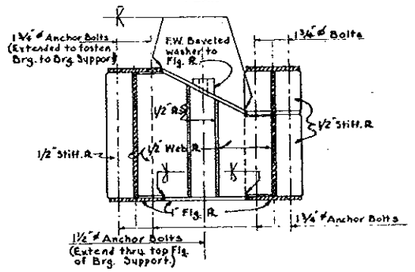

SECTION A-A.

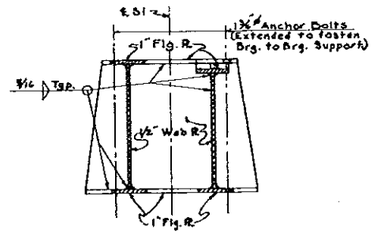

SECTION B-B

BEARING SUPPORT "A"

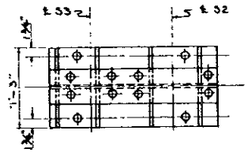

PLAN

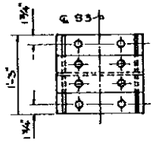

PLAN

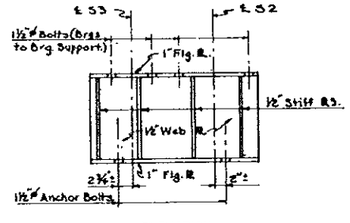

ELEVATION

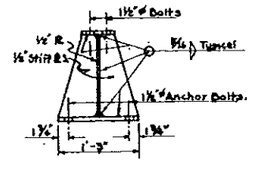

END VIEW

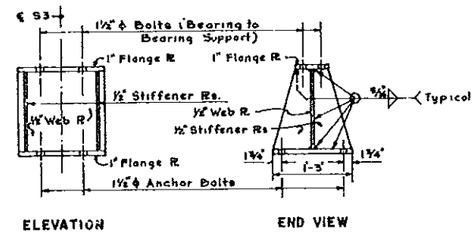

ELEVATION

END VIEW

BEARING SUPPORT "B"

BEARING SUPPORT "C"

STRUCTURE A

BASCULE SPAN-MACHINERY SUPPORTS

STATE ROAD DEPARTMENT OF FLORIDA
BRIDGE DIVISION

BRIDGES BETWEEN ESTERO ISLAND AND BONITA BEACH

REVISIONS		ROAD NO.	COUNTY	PROJECT NO.
Dates	Descriptions	S-865	LEE	12530-3153

	Names	Dates	APPROVED BY
Detailed by	S.F.J.	9-67	
Checked by	L.H.S.	10-67	
Quantities by			
Checked by			
Traced by	S.F.J.	9-67	

Drawing No. 48 of 60 | Index No. 7700

BX1-147

BX1-148

BX1-148

FED. ROAD DIV. NO.	STATE	PROJECT NO.	FISCAL YEAR	SHEET NO.
3	FLA.	12530-3153	63	B-50

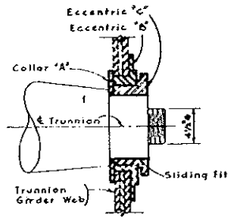

ECCENTRIC ASSEMBLY

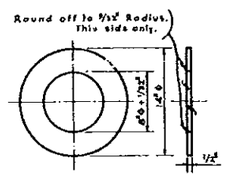

COLLAR "A"

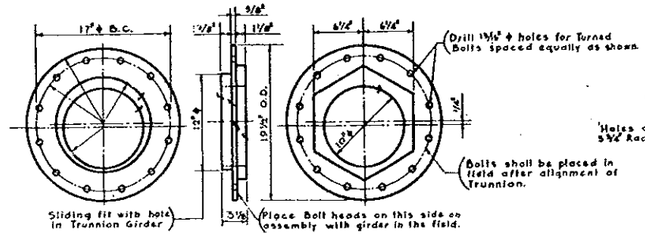

ECCENTRIC "B"

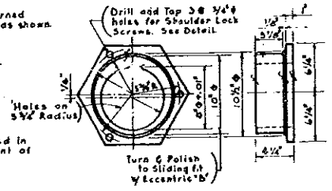

ECCENTRIC "C"

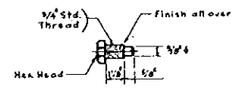

SHOULDER LOCK SCREW

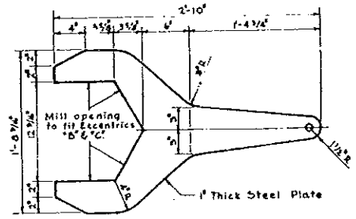

WRENCH FOR ECCENTRICS

DETAILS OF ECCENTRICS

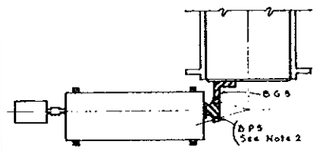

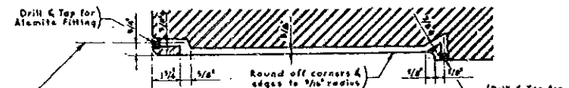

GREASE GROOVES

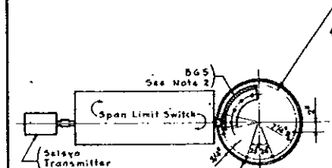

VIEW F-F
(SHOWING SPAN LIMIT SWITCH)

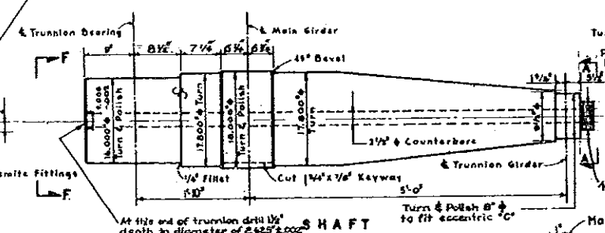

SHAFT

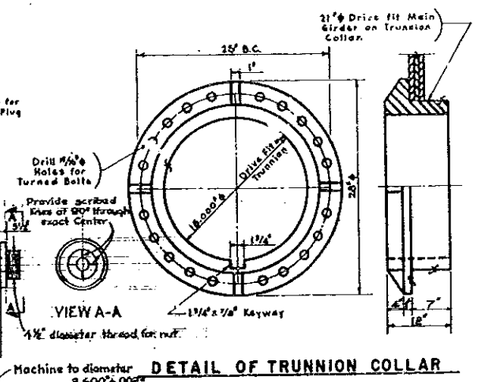

VIEW A-A

DETAILS OF TRUNNION SHAFT

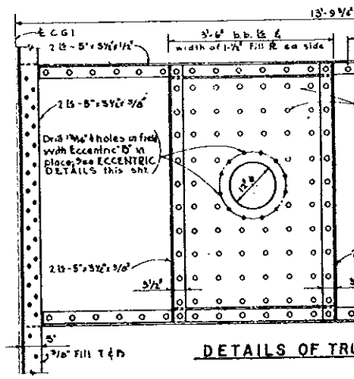

DETAIL OF TRUNNION COLLAR

ALIGNING PLUG FOR TRUNNIONS
(Furn. & Deliver for use on each Bascule Project)

DETAILS OF TRUNNION GIRDER

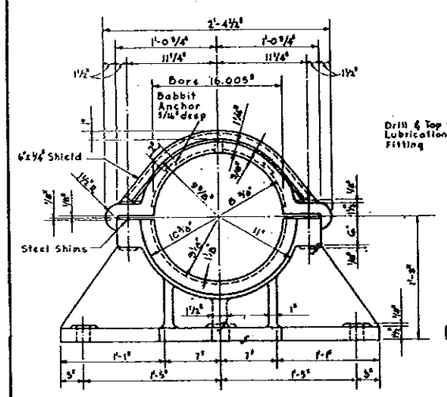

END

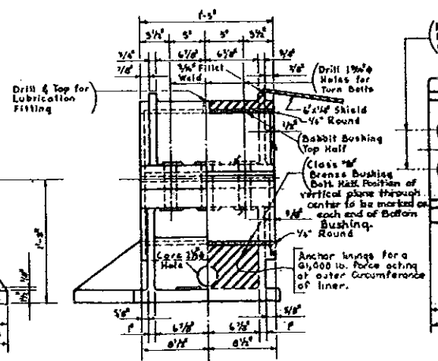

HALF ELEVATION | HALF SECTION
SIDE

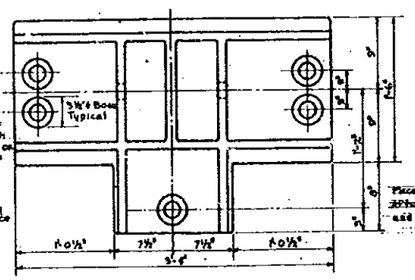

BASE

DETAILS OF TRUNNION BEARING

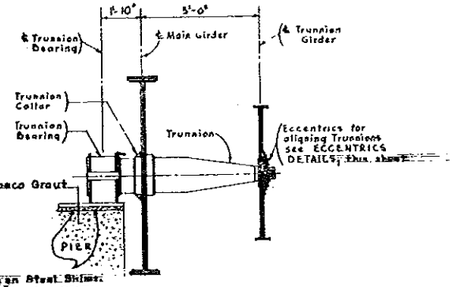

TRUNNION LAYOUT

NOTES

1. Eccentrics and Collar "A" shall be made of Structural Steel Stock; Trunnion Shaft shall be Annealed Carbon Steel, Forged, Class C; Trunnion Bearing and Trunnion Collar shall be Cast Steel.
2. B.P.-S 17 Tooth, 5 D.P., 3.4" Pitch Diameter Pinion.
   B.G.-S 71 Tooth (In Full Circle), 5 D.P., 14.2" Pitch Diameter Rack.
3. For General Notes, see Sheet B-1.
4. Steel in Trunnion Girder shall be included in the Contract Lump Sum Price under Item No. 320-2 Structural Steel, (Bascule Leaf). All other metal shall be included in Contract Lump Sum Price under Item No. 320-4 Machinery and Castings.

STRUCTURE A

BASCULE SPAN
TRUNNION AND RELATED DETAILS

STATE ROAD DEPARTMENT OF FLORIDA
BRIDGE DIVISION

BRIDGES BETWEEN ESTERO ISLAND AND BONITA BEACH

REVISIONS		ROAD NO.	COUNTY		PROJECT NO.
Date	Description	S 865	LEE		12530-3153
			Name	Date	APPROVED BY
		Detailed by	J.E.S.	8-57	
		Checked by	L.H.S.	8-57	
		Quantities by	B.G.C.	8-58	
		Checked by	J.E.S.	8-58	
		Traced by	J.E.S.	8-57	

Drawing No. 49 of 60 | Index No. 7700

BX1-148

BX1-149

BX1-149

FED. ROAD DIV. NO.	STATE	PROJECT NO.	FISCAL YEAR	SHEET NO.
3	FLA.	12530-3153	63	B-51

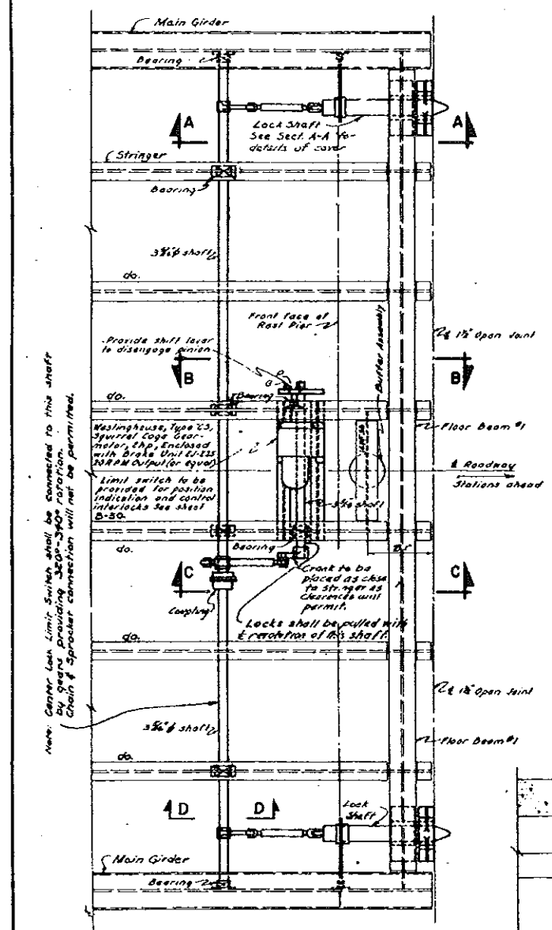

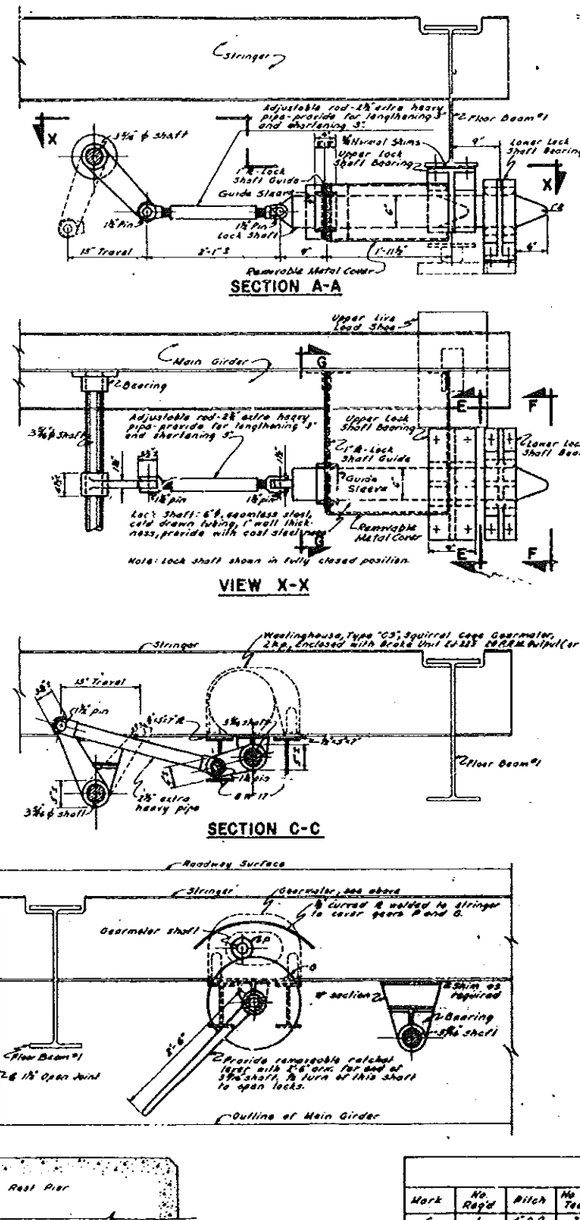

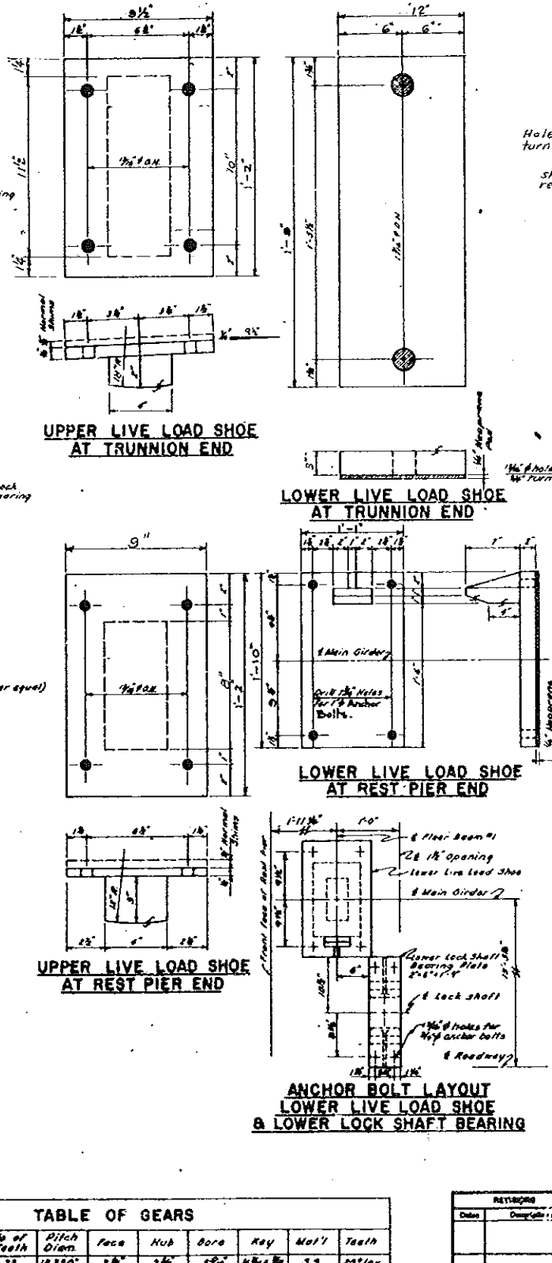

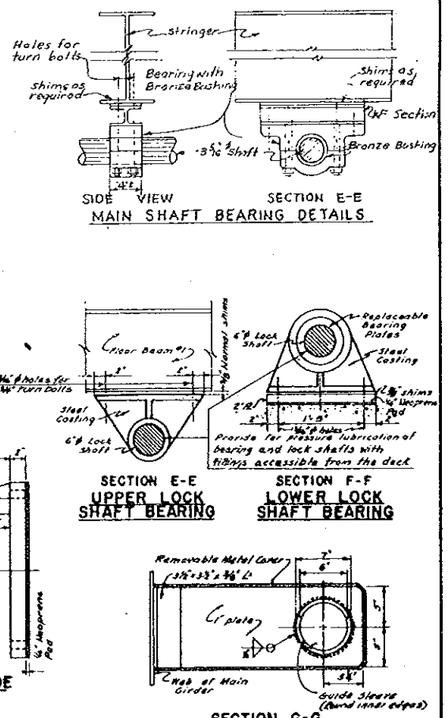

NOTES
1. For General Notes see sheet B-1.
2. Provisions shall be made for lubricating, from the Bridge Deck, all moving parts of the lock mechanism. Lubricating fittings for these parts shall be placed on the upper ends or small pipes connected to the parts and to the lower side of the Warwick Mfg. Boat Stock.
3. Live Load Shoes and Lower Lock Shaft Bearing Masonry Plate shall be fabricated from structural steel.
4. Cover ends of lubricating pipes with a hinged ¼" plate flush with top of Sidewalk.

STRUCTURE A

LOCK ASSEMBLY AND LIVE LOAD SHOES

TABLE OF GEARS

Mark	No. Req'd	Pitch	No. of Teeth	Pitch Diam.	Face	Hub	Bore	Key	Mat'l	Teeth
G	1	4" D.P.	73	18.250"	2⅝"	3½"	3⅞"	1⅛"×⅝"	S.S.	20°Involute
P	1	4" D.P.	16	3.500"	2⅝"	3½"	2⅞"	1⅛"×⅝"	S.S.	20°Involute

STATE ROAD DEPARTMENT OF FLORIDA
BRIDGE DIVISION

BRIDGES BETWEEN ESTERO ISLAND AND BONITA BEACH

REVISIONS Date	Description	ROAD NO.	COUNTY	PROJECT NO.
		S-865	LEE	12530-3153

	Names	Date
Detailed by	G.C.L.	10-67
Checked by	L.M.	11-67
Quantities by		
Checked by		
Traced by	G.C.L.	10-67

APPROVED BY: T.W. Jennings, Assistant State Highway Engineer

Drawing No. 50 of 60

Index No. 7700

BX1-149

BX1-149

BX1-150
BX1-150

FED. ROAD DIV. No.	STATE	PROJECT NO.	FISCAL YEAR	SHEET NO.
3	FLA.	12530-3153	63	B-52

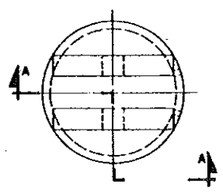

TOP VIEW

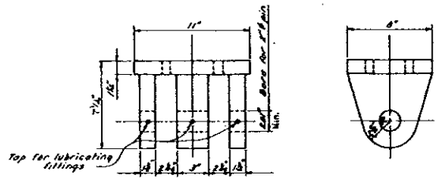

SUPPORT BRACKET

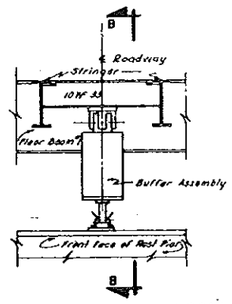

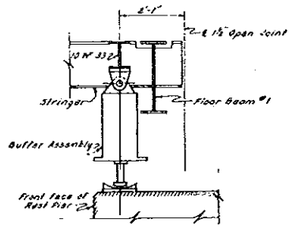

SECTION B-B

LOCATION OF BUFFERS

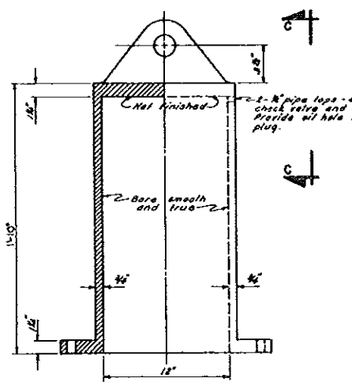

SECTION A-A

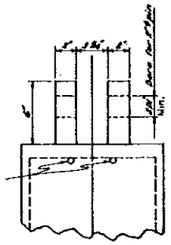

VIEW C-C

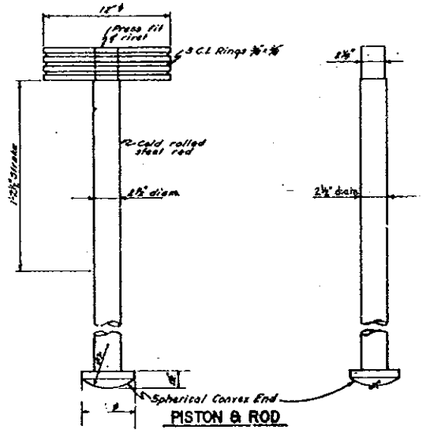

PISTON & ROD

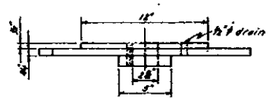

FRONT ELEVATION

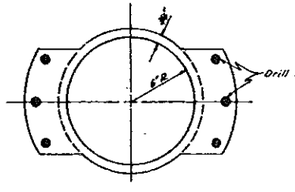

BOTTOM VIEW

BUFFER CYLINDER
(C.S. OR C.I.(MEEHANITE METAL))

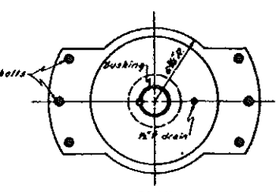

PLAN

CYLINDER HEAD
(C.S. OR S.S.)

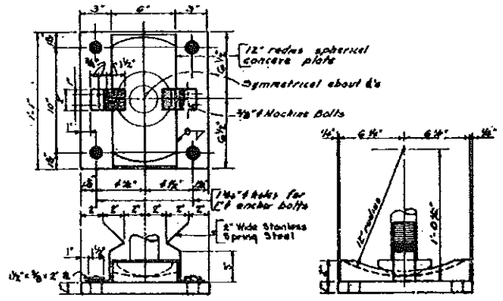

BUFFER PLATES

STRUCTURE A

BUFFER DETAILS

STATE ROAD DEPARTMENT OF FLORIDA
BRIDGE DIVISION

BRIDGES BETWEEN ESTERO ISLAND AND BONITA BEACH

REVISIONS		ROAD NO.	COUNTY	PROJECT NO.
Date	Description	S-865	LEE	12530-3153

	Name	Date
Detailed by	G.C.L.	11-57
Checked by	L.H.	11-57
Quantities by		
Checked by		
Traced by	G.C.L.	11-57

APPROVED BY

Bridge Engineer

Drawing No. 51 of 60

Index No. 7700

BX1-150
BX1-150

BX1-151
BX1-151

FED. ROAD DIV. No.	STATE	PROJECT NO.	FISCAL YEAR	SHEET NO.
3	FLA.	18530-3153	63	B-53

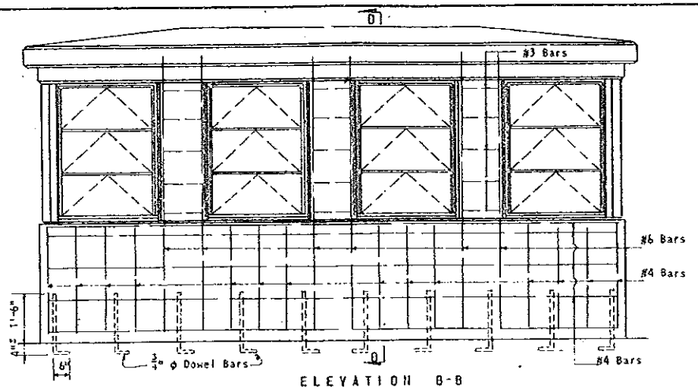

ELEVATION B-B

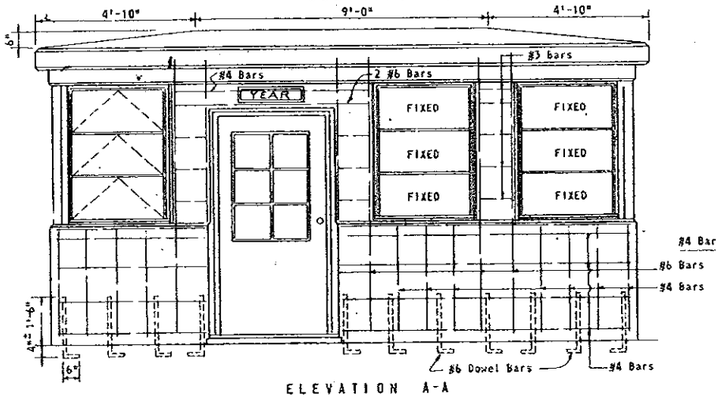

ELEVATION A-A

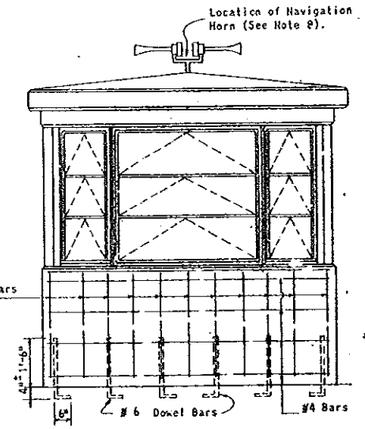

ELEVATION C-C

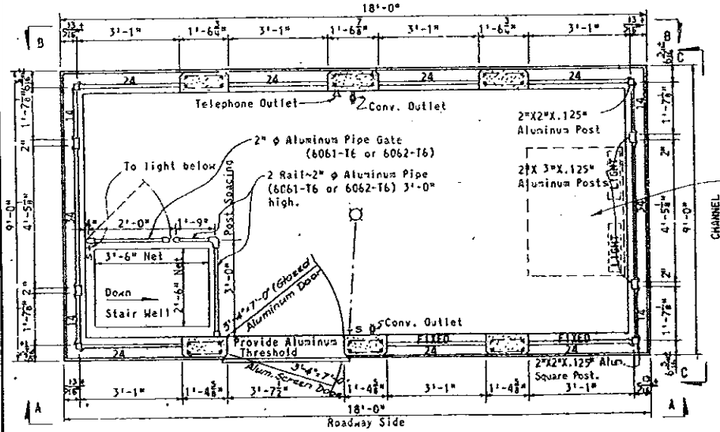

PLAN

NOTE: Year of completion of Job shall be formed over the door as shown in 3" recessed figures set in panel ¾" deep.

NOTE: The Stair Well shall be equipped with Steel Stairs and Aluminum Hatch Cover complete with Aluminum frame and handle. Provision shall be made for securely holding the Hatch Cover in the open position.

Location of Control Desk unless otherwise directed by the Engineer.

NOTE: Control House shall be constructed opposite hand to details shown on this sheet. See Sheet No. B-39.

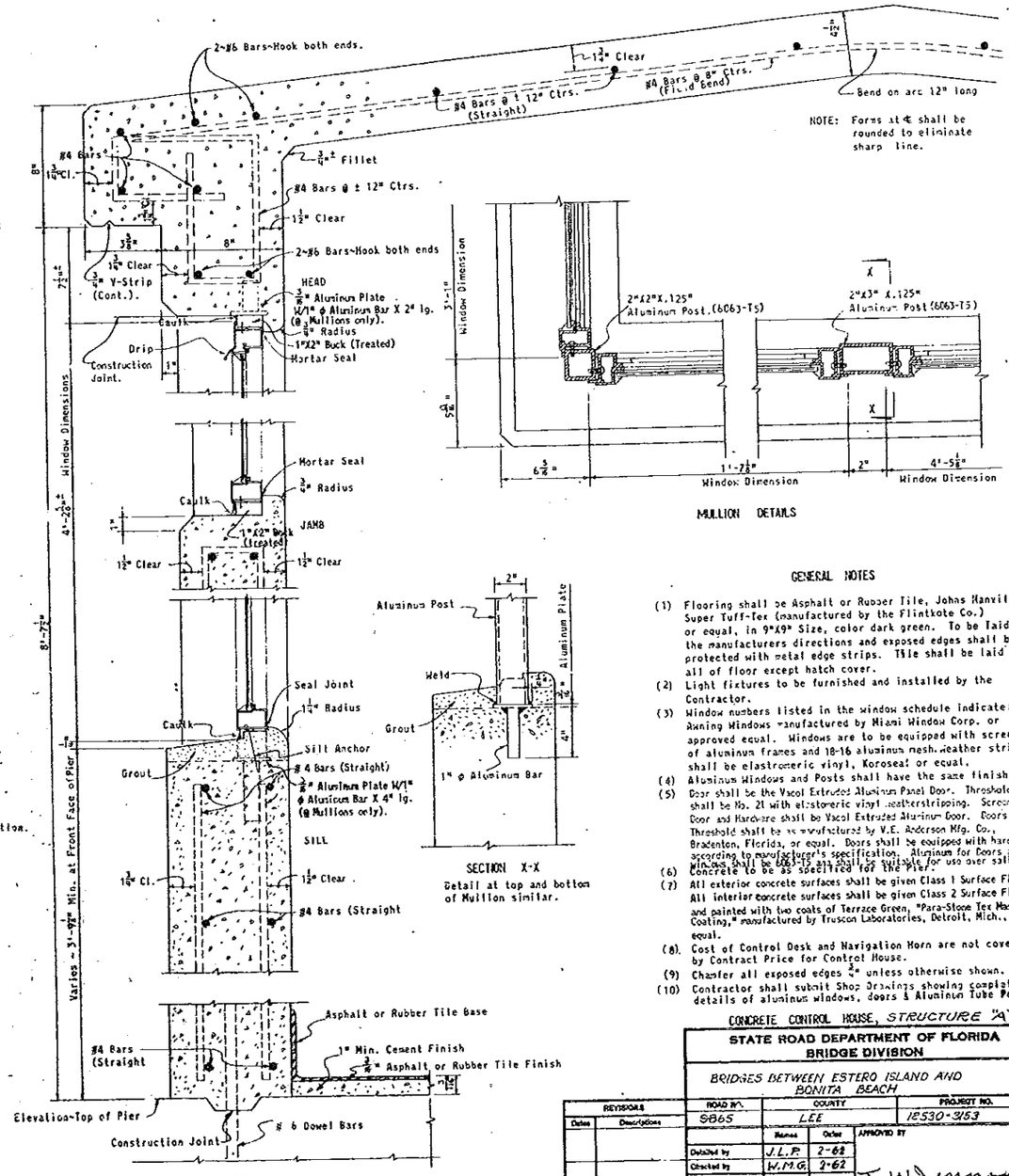

NOTE: Forms at ¢ shall be rounded to eliminate sharp line.

GENERAL NOTES

(1) Flooring shall be Asphalt or Rubber Tile, Johns Manville, Super Tuff-Tex (manufactured by the Flintkote Co.) or equal, in 9"X9" Size, color dark green. To be laid to the manufacturers directions and exposed edges shall be protected with metal edge strips. Tile shall be laid on all of floor except hatch cover.
(2) Light fixtures to be furnished and installed by the Contractor.
(3) Window numbers listed in the window schedule indicate Miami Awning Windows manufactured by Miami Window Corp. or approved equal. Windows are to be equipped with screens of aluminum frames and 18-16 aluminum mesh. Weather stripping shall be elastomeric vinyl, Koroseal or equal.
(4) Aluminum Windows and Posts shall have the same finish.
(5) Door shall be the Vacol Extruded Aluminum Panel Door. Threshold shall be No. 21 with elastomeric vinyl weatherstripping. Screen Door and Hardware shall be Vacol Extruded Aluminum Door. Doors and Threshold shall be as manufactured by V.E. Anderson Mfg. Co., Bradenton, Florida, or equal. Doors shall be equipped with hardware according to manufacturer's specification. Aluminum for Doors and Windows shall be 6063-T5 and shall be suitable for use over salt water concrete to be as specified for the Pier.
(6) All exterior concrete surfaces shall be given Class 1 Surface Finish.
(7) All interior concrete surfaces shall be given Class 2 Surface Finish, and painted with two coats of Terrace Green, "Para-Stone Tex Masonry Coating," manufactured by Truscon Laboratories, Detroit, Mich., or equal.
(8) Cost of Control Desk and Navigation Horn are not covered by Contract Price for Control House.
(9) Chamfer all exposed edges ¾" unless otherwise shown.
(10) Contractor shall submit Shop Drawings showing complete details of aluminum windows, doors & Aluminum Tube Posts.

CONCRETE CONTROL HOUSE, *STRUCTURE "A"*

STATE ROAD DEPARTMENT OF FLORIDA
BRIDGE DIVISION

BRIDGES BETWEEN ESTERO ISLAND AND BONITA BEACH

REVISIONS		ROAD NO.	COUNTY	PROJECT NO.
Dates	Descriptions	S865	LEE	18530-3153

	Names	Dates	APPROVED BY
Detailed by	J.L.P.	2-62	
Checked by	W.M.G.	2-62	T. W. Lennon
Quantities by			Assistant State Highway Engineer
Checked by			Drawing No. 32 OF 60 — Index No. 7700
Traced by	C.P.H.	2-62	

BX1-151
BX1-151

BX1-152
BX1-152

FED. ROAD SEC. NO.	STATE	PROJECT NO.	FISCAL YEAR	SHEET NO.
3	FLA.	72530-3153	'63	B-54

Note: Circuit shown for 3 wire service. For 4 wire service omit transformer (#28) and use single pole breakers in panel (#26).

NOTE
Bond all Cabinets and Frames to the system ground with #4 bare conductors.

30 Amp. Circuit for receptacle in Control House

KEY

DESCRIPTION	LOCATION
Outside Bridge Control Unit	C.B.
Bridge Control Unit	C.B.
Control Transformer	C.B.
Control Transformer	C.B.
Ammeter	C.B.
Voltmeter Transfer Switch	C.B.
Voltmeter	C.B.
Trouble Bell Circuit Breaker	C.B.
Trouble Bell	C.B.
Traffic Signal Control (Electronic)	C.B.
3 Pole Contactor (Electrically held)	C.B.
Warning Contactor (Electrically held)	C.B.
Span motor running overload relay	C.B.
Span motor (Counter Weight)	C.B.
Span motor 3 Pole circuit breaker	C.B.
Span motor 3 Pole Fuse Block	C.B.
Span motor reversing contactor	C.B.
Span motor reversing contactor	C.B.
Span motor running overload relay	C.B.
Span motor (Counter Weight)	C.B.
Lock motor 3 Pole circuit breaker	C.B.
Lock motor 3 Pole Fuse Block	C.B.
Lock motor reversing contactor	C.B.
Lock motor reversing contactor	C.B.
Lock motor running overload relay	C.B.
Lock motor (Counter Weight)	C.B.
Transformer (For Bell)	C.B.
Transformer (For Lights)	C.B.
Bell Circuit Breaker	C.B.
Bell	C.B.
Lights Circuit Breaker	C.B.
Lights Fuse Block	C.B.
Lights	C.B.
Lights	C.B.
Lights

BX1-153

BX1-153

FED. ROAD DIV. NO.	STATE	PROJECT NO.	FISCAL YEAR	SHEET NO.
3	FLA.	12530-3153	61	8-55

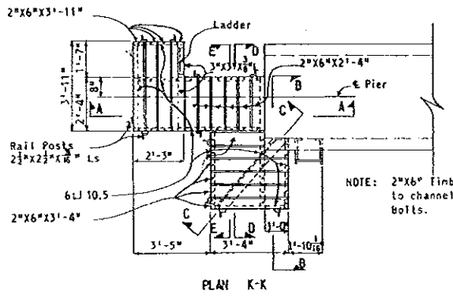

PLAN K-K

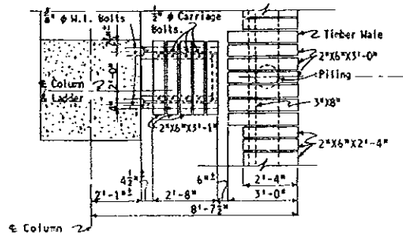

PLAN F-F

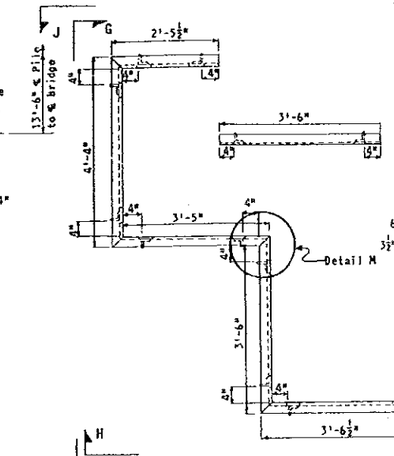

PLAN OF RAILING ON PLATFORM

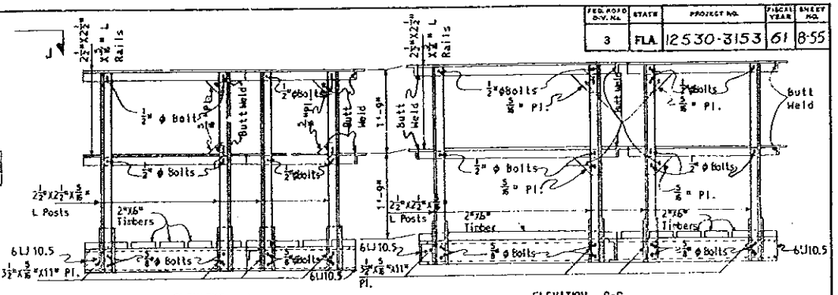

ELEVATION J-J

ELEVATION G-G

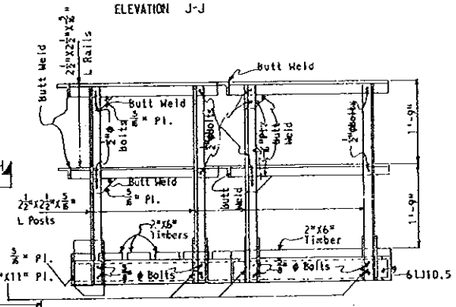

ELEVATION H-H

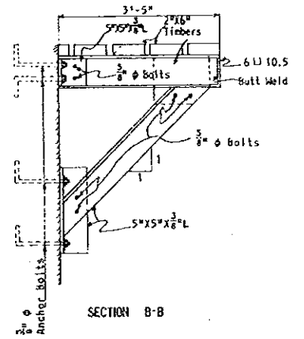

SECTION B-B

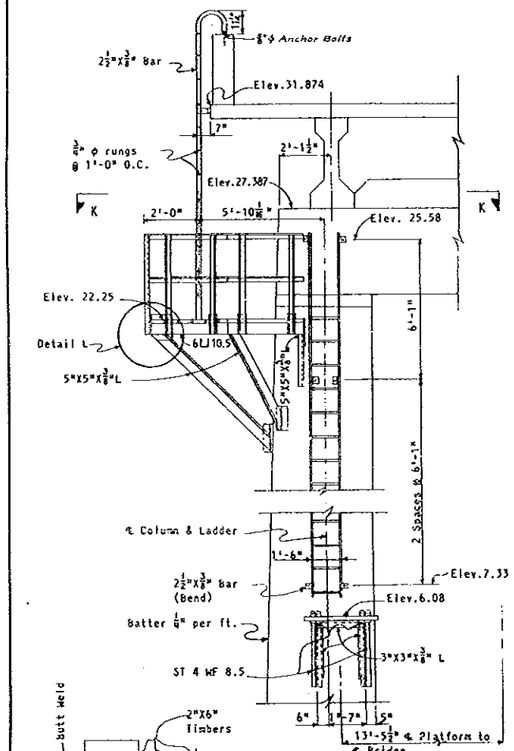

FRONT ELEVATION

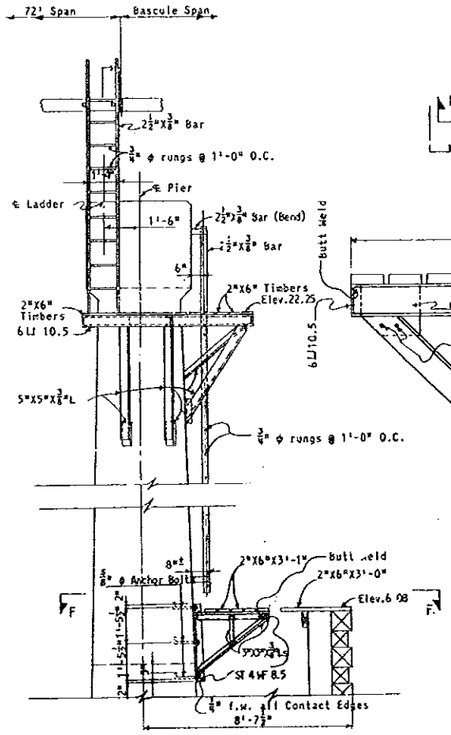

SIDE ELEVATION

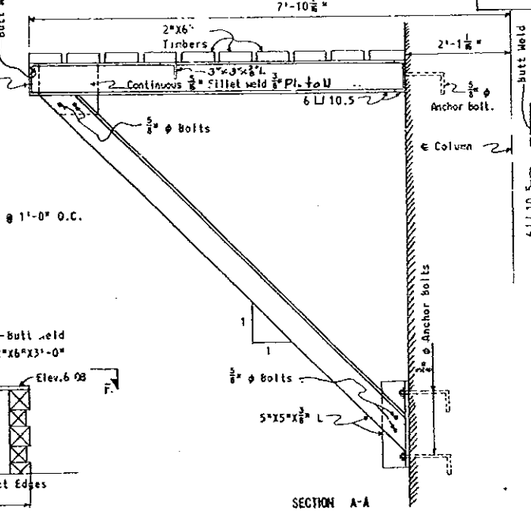

SECTION A-A

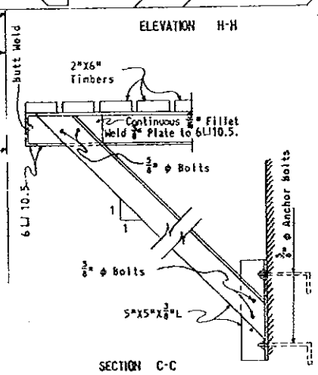

SECTION C-C

NOTE: An aluminum ladder and Platform of Corrosion Resistant Alloys and of strength equal to the Steel Design shown may be substituted at the Option of the Contractor.

NOTE: All Timber shall be rough.

NOTE: All Steel for Ladders and Access Platforms including Plates, Shapes, Bars, Bolts, Nuts and Washers shall be hot dip galvanized in accordance with requirements of A.S.T.M. Specification Designation A-123. Welding of parts shall be done prior to galvanizing.

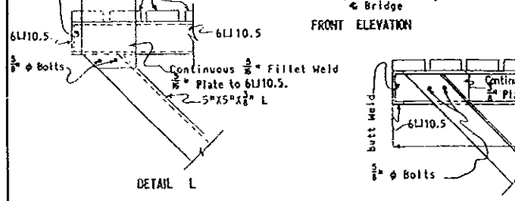

DETAIL L

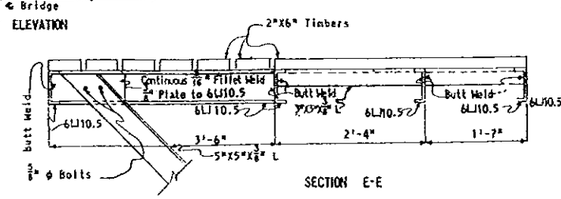

SECTION E-E

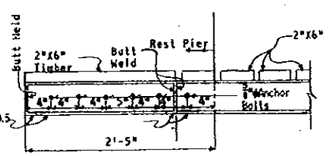

SECTION D-D

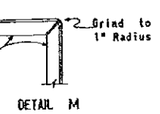

DETAIL M

ESTIMATED QUANTITIES

ITEM	UNIT	QUANTITY
Structural Steel (Flanking Span, Ladders & Platforms)	Lump Sum	*
Treated Structural Timber (12 lb. Treatment)	M.F.B.M.	.065

* See Estimated Bridge Quantities (Estimated Structural Steel in Ladders & Platforms for One Rest Pier is 1963 lbs.).

STRUCTURE A ~ REST PIER

ACCESS LADDERS AND PLATFORMS

STATE ROAD DEPARTMENT OF FLORIDA
BRIDGE DIVISION

BRIDGES BETWEEN ESTERO ISLAND AND BONITA BEACH

REVISIONS		ROAD NO.	COUNTY	PROJECT NO.
Date	Description	S-865	LEE	12530-3153

	Name	Date
Detailed by	B.R.L.	2-61
Checked by	R.L.T.	2-61
Quantities by	B.R.L.	2-61
Checked by	R.L.T.	2-61
Traced by	B.R.L.	2-61

APPROVED BY: T. W. Jennings, Assistant State Highway Engineer

Drawing No. 58.0260 | Index No. 7700



BX1-153

BX1-153

BX1-154

BX1-154

FED. ROAD PROJ. No.	STATE	PROJECT NO.	FISCAL YEAR	SHEET NO.
3	FLA	[illegible]	64	B-55

Red Navigation Light and Clearance Gage ~ see notes and details on other Fender.

PILE HEADS: Treat with creosote oil and pitch as specified in Article 903.15 of the Specifications, and cover with 10 oz. Copper Sheets of least 4" larger in each dimension than the diameter of the pile. Bend cover down and fasten with large headed copper nails or three wraps of #12 Copper Wire.

BILL OF TREATED STRUCTURAL TIMBER FOR TWO FENDERS

MARK	SIZE	LENGTH	NO. REQ	F.B.M	CUTTING DIAGRAM
A	10"x10"	16'-0"	16	2133	16' 4'-0"
B	10"x10"	16'-0"	32	4267	5'-0" 16' 4'-0"
C	10"x10"	16'-0"	16	2133	4'-0" 16' 3'-0"
D	10"x10"	16'-6"	16	2200	2'-0" 16'-6" 16' 4" 2'-4"
E	10"x10"	17'-0"	8	1133	3'-4" 17' same as other end
F	10"x10"	7'-0"	22	1283	7'
G	3"x8"	16'-0"	22	704	16'
H	8"x8"	1'-0"	132	704	1'-0"
J	7"x6"	2'-9"	590	1378	2'-9"
K	3"x6"	3'-0"	14	42	3'-0"
L_1	2"x6"	3'-1"	3	9	3'-1"
M_1	10"x10"	16'-6" (20'-6")	4	(1225) 825	Cut Ends in Field to Fit
M_2	10"x10"	17'-6"	6	875	
N	3"x10"	3'-6" (12'-0")	12	285 (375)	(12'-0") 3'-6"
P	3"x10"	6'-6"	12	195	6'-6"
T	10"x10"	14'-0"	2	233	Cut to Fit

ESTIMATED QUANTITIES FOR TWO FENDERS

ITEM	UNIT	QUANTITY
Treated Structural Timber (12# treatment)	M.F.B.M.	(6.688)
Treated Timber Piling *	Lin. Ft.	4240
Structural Steel (Flanking Spans, Ladders & Platforms)	Lump Sum	*
Shoes for Timber Piling	Each	156
Punching	Per Pile Hole	78

* 156 Piles 40 feet long.
* See Estimated Bridge Quantities. (The Estimated Quantity of Structural Steel for one Ladder and Platform at Trunnion Pier is 457 lbs. For details of Ladder and Platform at Rest Pier, See Sheet B-55).

ACCESS PLATFORM AT TRUNNION PIER

For details of Access Platform at Rest Pier see Sheet B-55.

PLAN

(With Catwalk Omitted)

DETAIL OF WALE SPLICE

DETAIL OF STEEL PILE SHOE

Note: Steel Pile Shoe shall be American Pulley Co. No. 2, or equal. Shoes shall be installed according to the Manufacturers recommendations.

SECTION B-B

SECTION C-C

SECTION D-D

All details not shown are the same as in SECTION B-B

ELEVATION A-A

VIEW E-E

DETAIL OF 7 PILE CLUSTER

DETAIL OF 3 PILE CLUSTER

VIEW OF CLEARANCE GAGE

TYPICAL BOLT

VIEW X-X

NOTE: An Aluminum Ladder and Platform of approved Corrosion Resistant Alloys and of strength equal to the Steel Design Shown, may be substituted, at the option of the Contractor.

NOTE: All Steel for Ladders and Access Platforms including Plates, Shapes, Bars, Bolts, Nuts and washers, shall be Hot Dip Galvanized in accordance with requirements of A.S.T.M. Specifications Designation A-123. Welding of parts shall be done prior to Galvanizing.

Signs to be furnished by State Road Dept. and erected by the Contractor. Cost of erection to be included in the Contract Unit Price for Treated Structural Timber (12 Lb. Tr.). Mounting Timber (10"x10"x 14'-0" - 2 reqd.) shall be paid for at the Contract Unit Price for Treated Structural Timber (12 Lb. Tr.).

Location of Vertical Clearance Gage to be mounted on Fender. Mount PAR-38 Light on a corrosion resistant bracket to illuminate Sign and Gage.

All ends of Cables shall be secured with three standard cable clamps at 4'-4" min. spacing.

Estimated Quantity of Structural Steel for one Ladder and Platform at Trunnion Pier is 457 lbs. For details of Ladder and Platform at Rest Pier, See Sheet B-55).

NOTES

1. Pile Tips: 7" diameter tips will be accepted on Timber Piles.
2. Bolts: All bolts shall be Dome Head Bolts, 7/8"ϕ with one Galv. O.G. washer & nut. Special forged nut equal to diameter of O.G. washer may be used in lieu of O.G. washer.
3. Access Platform: Anchor Bolts & ½"ϕ Bolts (Round Head) shall be Galv. & shall be paid for as: Structural Steel (Flanking Spans, Ladders & Platforms.)
4. Treatment: All Timber shall be given 12# Treatment.
5. Pile Head Coverings: See Specifications & Pile Head Note on this Sheet.
6. Timber: All Timber shall be rough.
7. Hardware: The cost of Hardware shall be included in the Contract Unit Price for Treated Structural Timber (12# Treatment). All Hardware shall be Galv.

STRUCTURE A ~ DETAILS OF FENDER AND PLATFORM

STATE ROAD DEPARTMENT OF FLORIDA
BRIDGE DIVISION

BRIDGES BETWEEN ESTERO ISLAND AND BONITA BEACH

REVISIONS		ROAD NO.	COUNTY	PROJECT NO.
Date	Description	S 865	LEE	12[illegible]
1/64	Piles Removed, Seal depth increased			

	Name	Date
Detailed by	G.F.J.	9-57
Checked by	L.H.S.	10-57
Quantities by	L.H.S.	10-57
Checked by	W.W.L.	9-58
Traced by	G.F.J.	9-57

APPROVED BY: T. W. [illegible] Engineer of Bridges

Sheet No. 55 of 60 Sheets — Index No. 7700

BX1-154

BX1-154