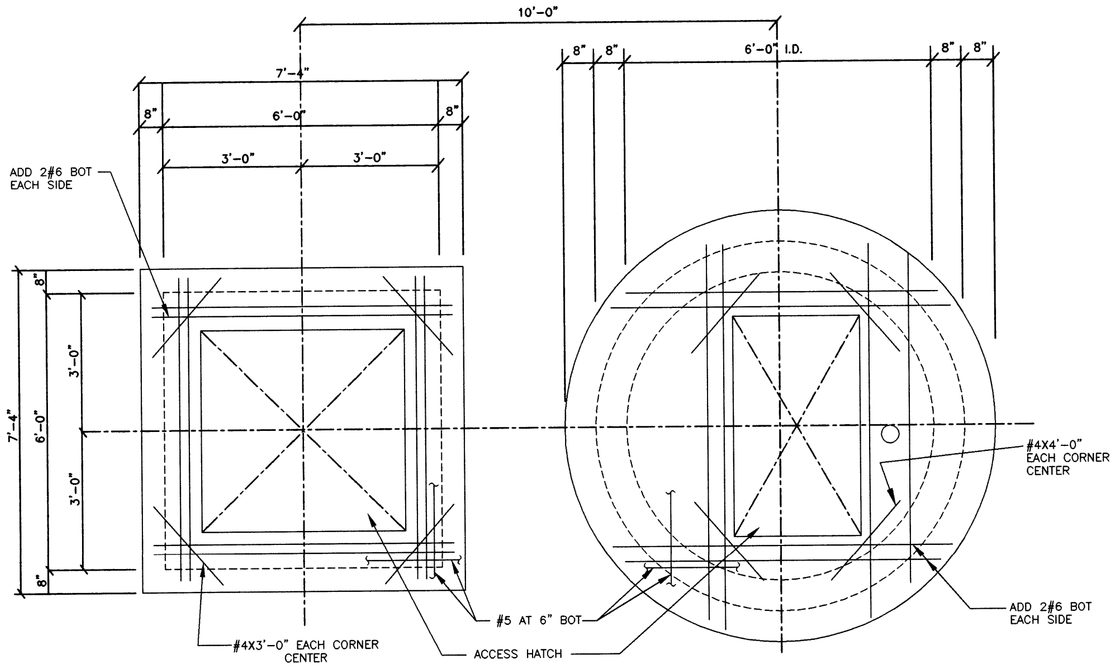

SECTION 2 / S-1

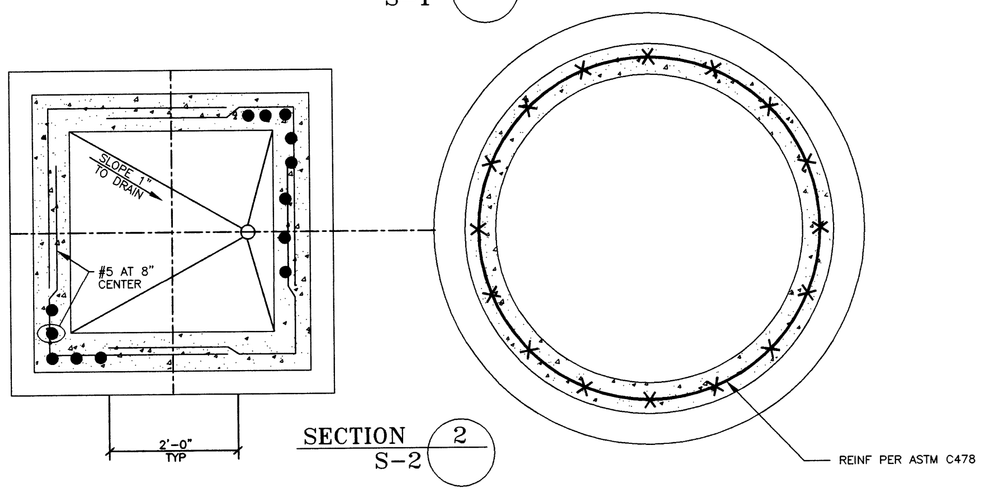

SECTION 2 / S-2

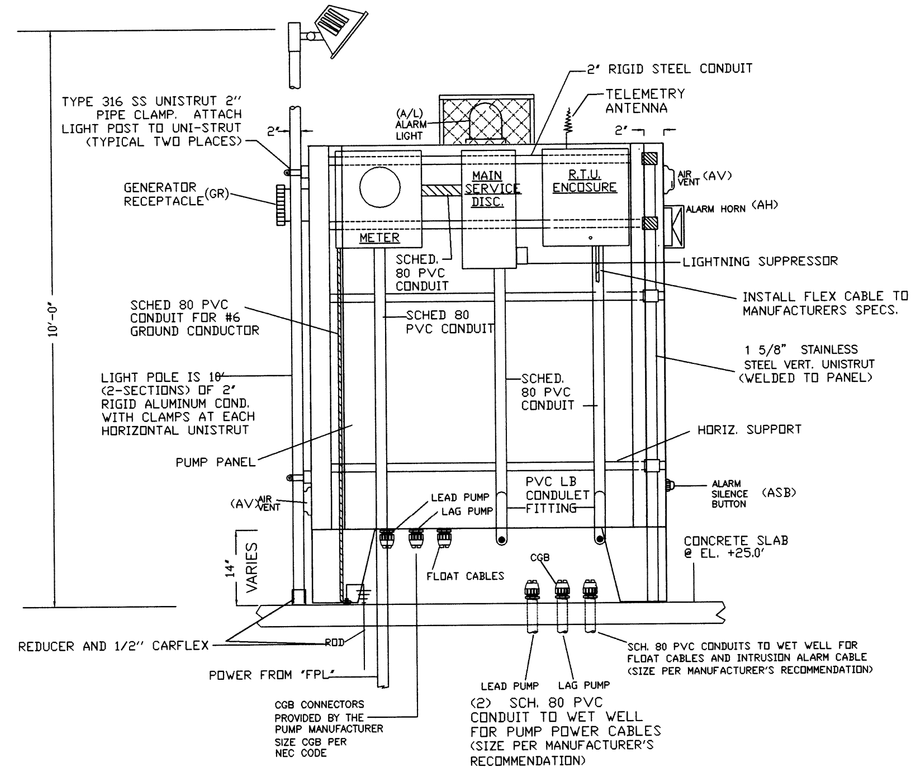

EQUIPMENT ELEVATION
(N.T.S.) BACK VIEW

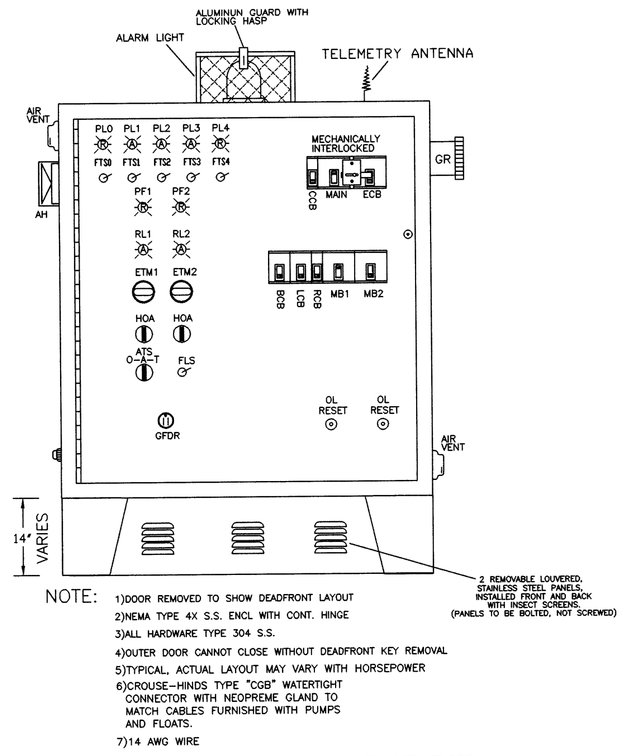

NOTE:
1) DOOR REMOVED TO SHOW DEADFRONT LAYOUT
2) NEMA TYPE 4X S.S. ENCL WITH CONT. HINGE
3) ALL HARDWARE TYPE 304 S.S.
4) OUTER DOOR CANNOT CLOSE WITHOUT DEADFRONT KEY REMOVAL
5) TYPICAL, ACTUAL LAYOUT MAY VARY WITH HORSEPOWER
6) CROUSE-HINDS TYPE "CGB" WATERTIGHT CONNECTOR WITH NEOPREME GLAND TO MATCH CABLES FURNISHED WITH PUMPS AND FLOATS.
7) 14 AWG WIRE

SERVICE ENTRANCE AND INTERFACE BOX
(N.T.S.) FRONT VIEW

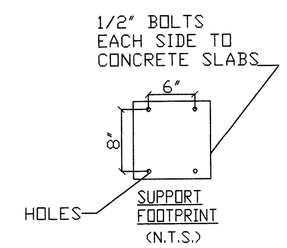

(N.T.S.)

CAST IN PLACE CONCRETE

ALL MATERIAL AND METHODS OF CONSTRUCTION SHALL BE IN ACCORDANCE WITH ACI-350R AND ACI-318 REQUIREMENTS. CONCRETE: 28-DAY COMPREHENSIVE STRENGTH-4000 PSI, CEMENT-TYPE II AIR-ENTRAINING WATER REDUCING ADMIXTURES-PER SPECIFICATIONS.

PRE-CAST CONCRETE

MATERIALS AND METHODS OF CONSTRUCTION SHALL BE PER SPECIFICATIONS. CONTRACTOR SHALL SUBMIT SHOP DRAWINGS FOR PRE-CAST ELEMENTS FOR ENGINEER'S REVIEW.

REINFORCEMENT

REINFORCEMENT SHALL CONFORM TO ASTM A615-GRADE 60 REQUIREMENTS. ALL ACCESSORIES SHALL BE IN CONFORMANCE WITH ACI-315 REQUIREMENTS. THE CONTRACTOR SHALL PREPARE DETAILED PLACEMENT DRAWINGS AND SCHEDULES IN CONFORMANCE WITH ACI-315 REQUIREMENTS, FOR ENGINEER'S REVIEW.

FOUNDATION DEWATERING/FLOATATION

FOUNDATION DEWATERING SHALL BE MAINTAINED UNTIL FOUNDATION EXCAVATION IS TOTALLY BACKFILLED. CONTRACTOR SHALL PROTECT THE STUCTURE AGAINST FLOATATION, UNTIL THE STRUCTURE IS PUT INTO SERVICE.

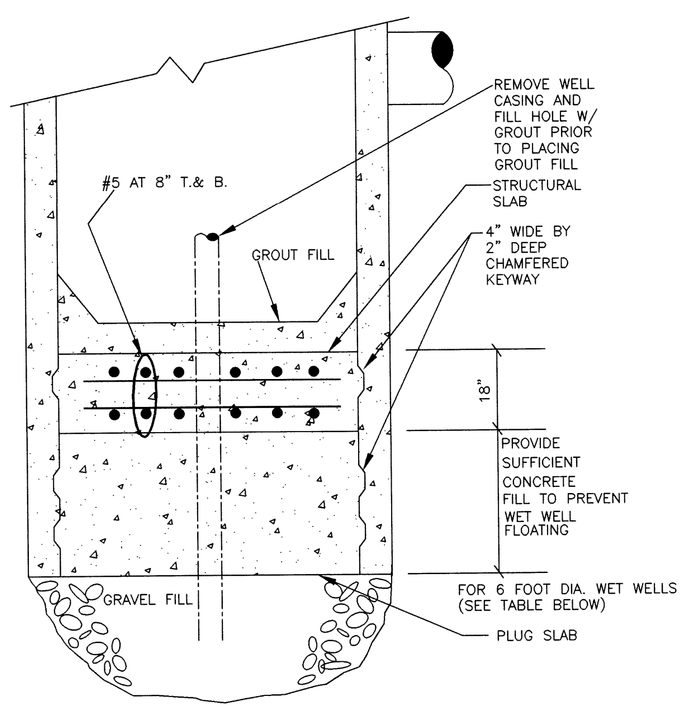

BASE SLAB CONSTRUCTION
NTS

6'-0" I.D. PUMP STATION				
DEPTH OF P.S.	0' TO 12'	13' TO 18'	19' TO 22'	23' TO 26'
PLUG SLAB "T"	12"	24"	30"	36"

DEPTH OF P.S. REFERS TO TOP OF PUMP STATION SLABS TO STRUCTURAL SLAB BOTTOM OF WETWELL

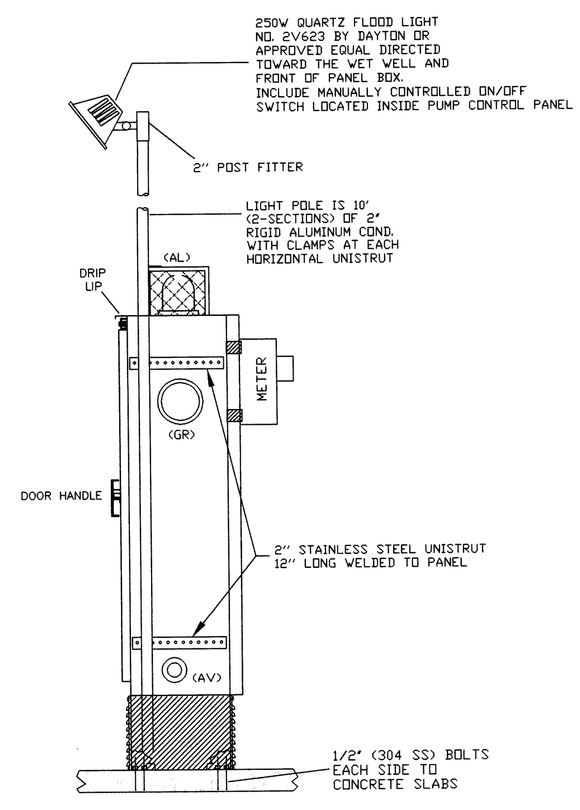

CONTROL PANEL ELEVATION
SIDE VIEW (N.T.S.)

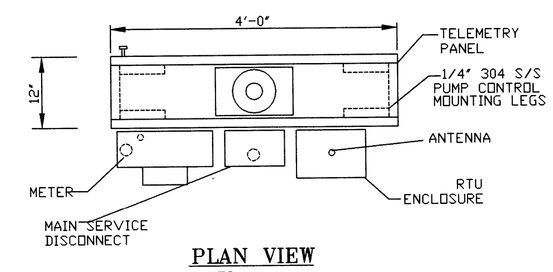

PLAN VIEW
NTS

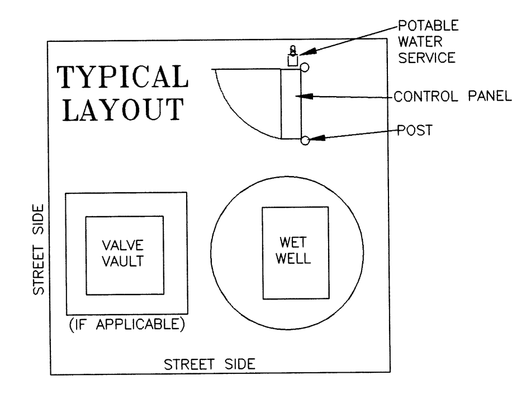

| | | | |