60% CONSTRUCTION PLANS

THREE OAKS PARKWAY EXTENSION

PHASE 1: FIDDLESTICKS CANAL TO STA 265+20

LEE COUNTY PROJECT NO. CN160642/ANB

BOARD OF LEE COUNTY COMMISSIONERS

District ONE	District TWO	District THREE	District FOUR	District FIVE
John Manning	*Cecil Pendergrass*	*Larry Kiker*	*Brian Hamman*	*Frank Mann*

LEE COUNTY MANAGER

Roger Desjarlais

LEE COUNTY DEPARTMENT OF TRANSPORTATION

Randy Cerchie, Director
Vincent Miller, Project Manager

ADDITIONAL PLAN SETS PROVIDED UNDER SEPARATE COVER:

UTILITY ADJUSTMENT PLANS
BOX CULVERT PLANS
RIGHT OF WAY MAPS

THIS CONTRACT PLAN SET INCLUDES

ROADWAY PLANS

INDEX OF ROADWAY PLANS

1	COVER SHEET
2–3	SUMMARY OF PAY ITEMS
4–5	DRAINAGE BASIN MAP
5A	DRAINAGE BASIN PROFILE
6	TYPICAL SECTIONS
7–9	SUMMARY OF DRAINAGE STRUCTURES
10–11	DRAINAGE STRUCTURE DATA
12–13	PROJECT LAYOUT
14	GENERAL NOTES
15–30	ROADWAY PLAN & PROFILE (THREE OAKS PKWY. EXT.)
31	INTERSECTION DETAIL
32–43	DRAINAGE STRUCTURES
44	SECTION AT BOX CULVERTS
45	LAKE–A DETAIL PLAN
46	LAKE–B DETAIL PLAN
47	LAKE–C SOUTH DETAIL PLAN
48	LAKE–C NORTH DETAIL PLAN
49–50	LAKE SECTIONS
51	CONTROL STRUCTURE AND DRAINAGE DETAILS
52	ROADWAY SOIL SURVEY
53–101	ROADWAY CROSS SECTIONS
102–103	STORMWATER POLLUTION PREVENTION PLAN
104–106	EROSION CONTROL PLAN
107	LAKE–A LITTORAL PLANTINGS
108	LAKE–B LITTORAL PLANTINGS
109–110	LAKE–C LITTORAL PLANTINGS

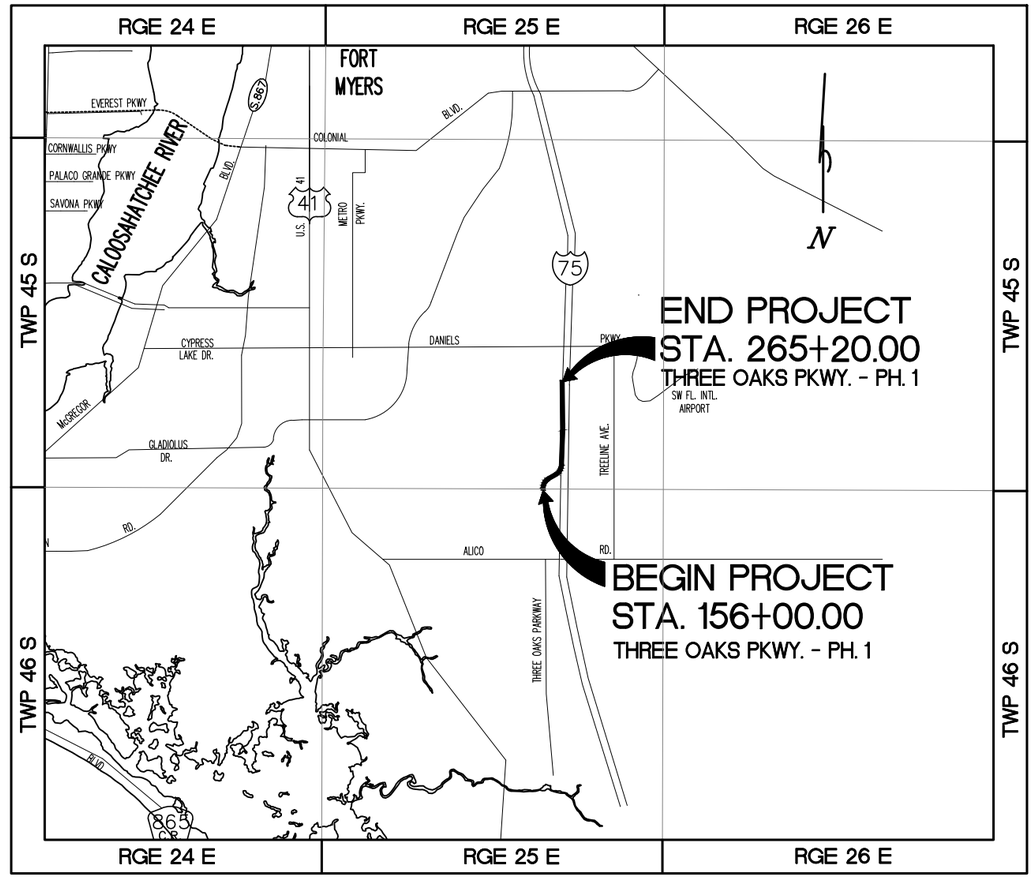

LOCATION MAP
N.T.S.

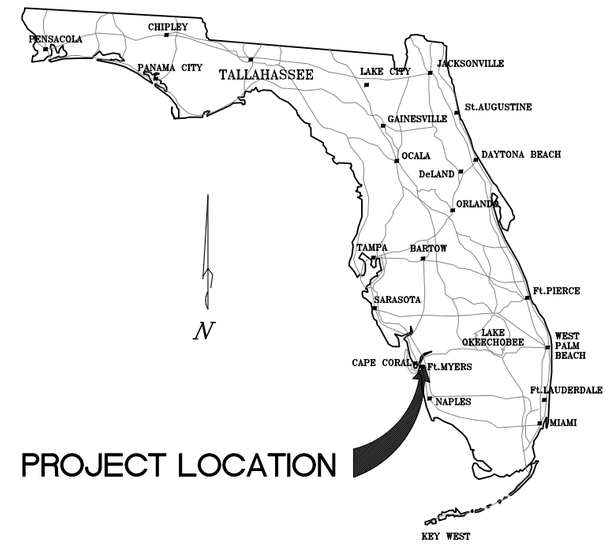

VICINITY MAP
N.T.S.

LENGTH OF PROJECT

	FEET	MILES
ROADWAY	10,920.00	2.07
BRIDGES	0	0
NET LENGTH OF PROJECT	10,920.00	2.07
EXCEPTIONS	0	0
GROSS LENGTH OF PROJECT	10,920.00	2.07

ATTENTION IS DIRECTED TO THE FACT THAT THESE PLANS MAY HAVE BEEN REDUCED IN SIZE BY REPRODUCTION. THIS MUST BE CONSIDERED WHEN OBTAINING SCALED DATA.

EXCEPT WHERE OTHERWISE INDICATED BY SPECIAL PROVISION. THE GOVERNING SPECIFICATIONS SHALL BE: STATE OF FLORIDA, DEPARTMENT OF TRANSPORTATION, STANDARD SPECIFICATIONS FOR ROAD AND BRIDGE CONSTRUCTION DATED JULY 2019, STANDARD PLANS FOR ROADWAY FY 2019–20, AND SUPPLEMENTS THERETO IF NOTED IN THE SPECIAL PROVISIONS FOR THIS PROJECT.

ALL EXISTING AND PROPOSED GRADES SHOWN REFER TO N.A.V.D. 1988, UNLESS SHOWN OTHERWISE.
DATUM CONVERSION: NAVD'88 = –1.18 NGVD'29

ROADWAY PLANS
ENGINEER OF RECORD: JACK SCHRAGER, P.E.
FL. LICENSE NO._____24070_____

P:\CAD\2017\17-372\3-Oaks-Ph1\PLOT_PHASE1\COVER.dwg, 1 COVER SHEET, 4/29/2019 3:33:38 PM, Avalon Engineering Inc.

DATE	BY	REVISION DESCRIPTION

60% PLANS

AVALON PROJECT: 17–372
PROJ. MGR. Jack Schrager, PE, VP
LEE COUNTY DOT PROJECT: CN160642/ANB
LDOT PROJ. MGR. VINCENT MILLER

AVALON ENGINEERING, INC.
2503 DEL PRADO BLVD, SUITE 200
CAPE CORAL, FLORIDA 33904
FBPE#3128 (239) 573–2077

LEE COUNTY DEPARTMENT OF TRANSPORTATION
(239) 533–8580

THREE OAKS PARKWAY EXTENSION
PHASE 1: FIDDLESTICKS CANAL TO STA 265+20
LEE COUNTY, FLORIDA

COVER SHEET
THREE OAKS PKWY EXT.

SHEET 1 of 110

PAY ITEM NOTES

102- 1 — UNIT COST TO INCLUDE ALL WORK AND MATERIAL ASSOCIATED WITH BUT NOT LIMITED TO, TEMPORARY PAVEMENT MARKINGS, TEMP. SIGNING, TRAFFIC SAFETY, TRAFFIC DETOURS, TEMP. BARRICADES, SERVICE PATROL, DRIVEWAY MAINTENANCE, AND TEMP. PAVEMENT.

104- — ARE ESTIMATED FOR PREVENTION, CONTROL, AND ABATEMENT OF EROSION AND POLLUTION AND ARE TO BE USED AT LOCATIONS DESIGNATED BY THE PLANS, DESIGN STANDARDS, SPECIFICATIONS, OR AS DIRECTED BY THE ENGINEER.

104-18 — QUANTITY BASED ON USE OF BALES AS INLET PROTECTION AROUND EXISTING INLETS AND JUNCTION BOXES ONLY.

104-10 — QUANTITY BASED ON PLACEMENT ALONG ENTIRE PROJECT RIGHT-OF-WAY.

110-1-1 — QUANTITY SHALL INCLUDE EXISTING PIPE REMOVAL AND EXISTING STRUCTURE REMOVAL (INCLUDING INLETS AND JUNC. BOXES) AS DESIGNATED TO BE REMOVED ON THE PLANS. PIPE REMOVAL SHALL EXTEND FROM STRUCTURE TO STRUCTURE AND SHALL INCLUDE DISPOSAL. PARTIAL PIPE REMOVAL WITH PLUGGING REMAINDER SHALL NOT BE PERMITTED. PAY ITEM SHALL ALSO INCLUDE REMOVAL AND DISPOSAL OF ALL PAVEMENT AND BASE NOT INCLUDED IN OTHER PAY ITEMS.

110-4-10 — PAY ITEM SHALL INCLUDE REMOVAL AND DISPOSAL OF CONCRETE SIDEWALK AND CURB & GUTTER AS SHOWN ON THE PLANS.

120-6 — ANY BORROW EXCAVATION REQUIRED SHALL BE FURNISHED BY THE CONTRACTOR FROM AREAS PROVIDED BY HIM AND MEETING MATERIAL REQUIREMENTS. THE COST OF FURNISHING, TRUCKING, AND PLACEMENT OF SUCH MATERIAL IS TO BE INCLUDED IN THE PRICE FOR EMBANKMENT.

285-709 — OPTIONAL BASE GROUP SHALL INCLUDE BITUMINOUS MATERIAL (PRIME AND TACK COAT) AS REQUIRED FOR SPECIFIC BASE OPTION SELECTED.

327-70-1 — MILLING OPERATION SHALL INCLUDE REMOVAL AND DISPOSAL OF THE CONC. ASPHALT.

331-2 — SHALL COMPLY WITH FDOT SPECIFICATIONS DATED 2019-2020.

400-1-25 — UNIT COST TO INCLUDE ALL WORK AND MATERIAL ASSOCIATED WITH PLACEMENT OF CONCRETE INCLUDING REINFORCEMENT. THIS PAY ITEM SHALL INCLUDE THE CONSTRUCTION OF PEDESTRIAN TRAFFIC ISLANDS, CONCRETE CURBING AT COMMERCIAL DRIVEWAYS, MEDIAN NOSES, AND MISC. CONCRETE NOT COVERED IN OTHER PAY ITEMS ASSOCIATED WITH THE PROJECT.

430-175-XXX — ALL PIPE MATERIALS SHALL BE REINFORCED CONCRETE PIPE (RCP OR ERCP) AS INDICATED ON THE PLANS AND APPROVED BY THE COUNTY AND/OR ENGINEER BEFORE CONTRACTOR'S ACQUISITION. UNIT COST TO INCLUDE ALL WORK AND MATERIAL ASSOCIATED WITH THE PROJECT.

430-982-6XX — UNIT COST TO INCLUDE ALL WORK AND MATERIAL ASSOCIATED WITH CONSTRUCTION OF THE MITERED END SECTION (M.E.S) INCLUDING: CONCRETE, REINFORCEMENT, PIPE, GRADING, AND OTHER INCIDENTAL MATERIALS AND WORK REQUIRED TO INSTALL EACH M.E.S. SODDING IS PAID SEPARATELY UNDER PERFORMANCE TURF-SOD, PER SY (FDOT PAY ITEM# 570-1-2).

520-1-10 — QUANTITY AND PAYMENT INCLUDES LENGTH OF DROP CURB TRANSITIONS ALONG GRADE LINE PLUS THE LENGTH OF VALLEY GUTTER, CURB FLARES, MOWER RAMPS WITH TRANSITIONS, AND THE TRANSITION TIE-INS TO EXISTING MEDIANS.

522-X — CONCRETE SIDEWALK SHALL INCLUDE CONSTRUCTION OF HANDICAP AND DRIVEWAY RAMPS AS DETAILED HEREIN AND IN ACCORDANCE WITH F.D.O.T. AND A.D.A. REQUIREMENTS.

522-2 — UNIT COST TO INCLUDE ALL WORK AND MATERIAL ASSOCIATED WITH CONSTRUCTION OF THE CONCRETE SIDEWALK AND COMMERCIAL DRIVEWAYS.

530-3-4 — UNIT COST TO INCLUDE ALL WORK AND MATERIAL ASSOCIATED WITH INSTALLATION OF RIP RAP INCLUDING COST TO FURNISH AND INSTALL FILTER FABRIC. UNIT MEASURED IN TONS.

NOTE:
QUANTITIES SHOWN ARE PRELIMINARY. INFORMATION PROVIDED IN THIS 60% DRAWING SET IS SUBJECT TO CHANGE AS MORE DETAILED DESIGN PROGRESSES.

SUMMARY OF ROADWAY PAY ITEMS

Item Number	Item Description	QUANTITY	UNIT	NOTES
	Roadway Items:			
101-1	MOBILIZATION, SURVEY, LAYOUT, AND RECORD DRAWINGS	1	LS	
102-1	MAINTENANCE OF TRAFFIC	1	LS	
104-10-3	SEDIMENT BARRIER -SYNTHETIC BALES	750	LF	
104-11	TURBIDITY BARRIER (FLOATING)	600	LF	
104-10-3	SEDIMENT BARRIER - SILT FENCE STAKED (TYPE III)	27,451	LF	
104-15	SOIL TRACKING PREVENTION DEVICE	1	EA	TEMP. CONSTRUCTION ENTRANCE
104-100	NPDES POLLUTION CONTROL	1	LS	NPDES POLLUTION CONTROL
110-1-1	CLEARING AND GRUBBING	1	LS	PROJECT ROW AREA (88 ACRES +/-)
110-4-10	REMOVAL OF EXISTING CONCRETE	179	SY	INCLUDES SIDEWALK AND CURB & GUTTER
120-1	EXCAVATION REGULAR	278,580	CY	
120-6	EMBANKMENT (ON SITE) - IN PLACE	209,955	CY	
160-4	STABILIZATION TYPE B (12")	98,970	SY	
162-1-11	FINISH SOIL LAYER (MEDIAN GRASSING OPERATION)	20,625	SY	
285-709	OPTIONAL BASE (BASE GROUP #09)	66,707	SY	
327-70-1	MILLING EXIST ASPH PAVT (1" AVG DEPTH)	358	SY	
334-1-13 (SURF)	SUPERPAVE ASPHALTIC CONCRETE TYPE SP-9.5 (1")	0	TN	SURFACE COURSE (NOT IN THIS CONTRACT)
334-1-13 (STR)	SUPERPAVE ASPHALTIC CONCRETE TYPE SP-12.5 (2-1/2")	9,172	TN	STRUCTURAL COURSE
400-1-2	CONCRETE CLASS I (ENDWALLS) (INCLUDES REINFORCEMENT)	46	CY	STORM DRAIN LAKE CONNECTION
400-1-25	MISC. CONCRETE (CLASS I)	4	CY	MEDIAN NOSE
425-1-351	INLETS (CURB) (TYPE P-5) (<10')	9	EA	
425-1-361	INLETS (CURB) (TYPE P-6) (<10')	29	EA	
425-1-362	INLETS (CURB) (TYPE P-6) (>10')	0	EA	
425-1-451	INLETS (CURB) (TYPE J-5) (<10')	1	EA	
425-1-461	INLETS (CURB) (TYPE J-6) (<10')	6	EA	
425-1-462	INLETS (CURB) (TYPE J-6) (>10')	7	EA	
425-1-559	INLETS (TYPE E) (STANDARD AND MODIFIED)	3	EA	INCL. 3 LAKE CONTROL STRUCTURES
425-2-41	MANHOLE (TYPE P-7T) (<10')	2	EA	
425-2-61	MANHOLE (TYPE P-8T) (<10')	0	EA	
425-2-62	MANHOLE (TYPE P-8T) (>10')	0	EA	
425-2-91	MANHOLE (TYPE P-8T) (<10') (W / J BOTTOM)	8	EA	
425-2-92	MANHOLE (TYPE P-8T) (>10') (W / J BOTTOM)	6	EA	
425-5	ADJUST MANHOLE (STORM DRAIN)	1	EA	
430-175-118	PIPE CULVERT OPTIONAL MATERIAL (18" RCP)	2,795	LF	
430-175-124	PIPE CULVERT OPTIONAL MATERIAL (24" RCP)	833	LF	
430-175-130	PIPE CULVERT OPTIONAL MATERIAL (30" RCP)	1,214	LF	
430-175-136	PIPE CULVERT OPTIONAL MATERIAL (36" RCP)	1,512	LF	
430-175-142	PIPE CULVERT OPTIONAL MATERIAL (42" RCP)	557	LF	
430-175-148	PIPE CULVERT OPTIONAL MATERIAL (48" RCP)	2,554	LF	
430-175-218	PIPE CULVERT OPTIONAL MATERIAL (23" x 14" ERCP)	143	LF	
430-175-230	PIPE CULVERT OPTIONAL MATERIAL (38" x 24" ERCP)	115	LF	
430-175-236	PIPE CULVERT OPTIONAL MATERIAL (45" x 29" ERCP)	115	LF	
430-982-625	MITERED END SECTION (23" x 14")	1	EA	
430-982-633	MITERED END SECTION (38"x24")	2	EA	
430-982-638	MITERED END SECTION (45" x 29")	2	EA	
520-1-10	CONCRETE CURB AND GUTTER (TYPE F)	43,604	LF	INCL. RAMPS & CURB FLARED ENDS
522-2	SIDEWALK CONCRETE (6" THICK)	14,561	SY	
530-3-4	RIP RAP RUBBLE - DITCH LINING (6"-24" ROCK BOULDER)	10	TN	INCLUDES FILTER FABRIC
536-1-8	GUARDRAIL (ROADWAY, W-BEAM GENERAL)	432	LF	
536-85-24	GUARDRAIL END TREATMENT - PARALLEL	2	EA	
570-1-2	PERFORMANCE TURF, SOD (BAHIA)	129,832	SY	

EARTHWORK NOTES:

1. EARTHWORK QUANTITIES HAVE BEEN CALCULATED USING LIMEROCK OPTIONAL BASE COURSE DEPTHS. IF A DIFFERENT OPTIONAL BASE IS CONSTRUCTED, THERE SHALL BE NO REVISION TO THE EARTHWORK QUANTITIES FOR WHICH PAYMENT IS MADE BY PLAN QUANTITY.
2. ALL EXCAVATIONS & EMBANKMENTS QUANTITIES ARE IN PLACE VOLUMES WITH NO FACTORS APPLIED; INCLUDING SHRINKAGE OR EXPANSION FACTORS OR ADJUSTMENTS FOR DRAINAGE STRUCTURES AND PIPES.
3. EARTHWORK QUANTITIES CALCULATED USING THE AVERAGE END AREA METHOD.
4. THE ORIGINAL GROUND LINE IS THE EXISTING GRADE LINE SHOWN ON THE CROSS SECTIONS AS DETERMINED BY TOPOGRAPHIC SURVEY PRIOR TO THE CONSTRUCTION ACTIVITIES. NO ALLOWANCES WERE MADE TO THE ESTIMATED QUANTITIES FOR SOIL REMOVAL DURING CLEARING & GRUBBING OPERATIONS.
5. THE CONTRACTOR SHALL MAKE HIS OWN ESTIMATE ON THE VOLUME OF MATERIAL REQUIRED TO OBTAIN THE PAY SECTION. SIMILARLY, THE CONTRACTOR SHALL MAKE HIS OWN ESTIMATE ON THE VOLUME OF EXCAVATED MATERIALS THAT MAY BE USED AS EMBANKMENT. PAYMENT SHALL BE PER PLAN QUANTITY SUBJECT TO THE PROVISIONS OF 9-3.2 IN THE FDOT STANDARD SPECIFICATIONS FOR ROAD AND BRIDGES.

SUMMARY OF EARTHWORKS

DESCRIPTION	CY	CY
REGULAR EXCAVATION	**P**	**F**
THREE OAKS PARKWAY EXTENSION	378	
LAKE 'A'	87,842	
LAKE 'B'	81,897	
LAKE 'C'	108,463	
SWALES	0	
SUB TOTAL	278,580	
EMBANKMENT	**P**	**F**
THREE OAKS PARKWAY EXTENSION	164,629	
LAKE 'A'	7,837	
LAKE 'B'	4,749	
LAKE 'C'	32,740	
SWALES	0	
TOTAL VOLUME REQUIRED	209,955	
	P	**F**
EMBANKMENT (ON SITE) IN-PLACE	278,580	
EXCESS MATERIAL	-68,625	

CONCRETE CLASS I (ENDWALL)

STRUCTURE I.D.	LOCATION		PIPE SIZE	VOLUME
	STATION	OFFSET		C.Y.
EW-A1	161+88.80	368.06' RT.	18"	1.56
EW-A2	161+55.00	116.00' RT.	18"	1.56
EW-A3	165+38.00	116.00' RT.	18"	1.56
EW-A4	168+78.00	135.00' RT.	48"	8.15
EW-A5	168+63.00	116.00' RT.	18"	1.56
EW-B1	221+41.59	710.26' LT.	18"	1.56
EW-B2	221+50.00	127.00' LT.	30"	3.26
EW-B3	224+20.00	133.00' LT.	36"	4.53
EW-C1	254+82.80	704.39' LT.	18"	1.56
EW-C2	252+00.00	124.00' LT.	24"	2.24
EW-C3	254+60.00	116.00' LT.	18"	1.56
EW-C4	259+90.00	116.00' LT.	18"	1.56
EW-C5	265+05.00	116.00' LT.	24"	2.24
TOTAL VOLUME				**32.90**

ENDWALL NOTE:
QUANTITY CALCULATIONS PER FDOT STANDARD PLANS INDEX 430-030.

NOTE:
QUANTITIES SHOWN ARE PRELIMINARY. INFORMATION PROVIDED IN THIS 60% DRAWING SET IS SUBJECT TO CHANGE AS MORE DETAILED DESIGN PROGRESSES.

SUMMARY OF MITERED END SECTIONS

STRUCTURE I.D.	LOCATION		PIPE SIZE	CONCRETE	SODDING
	STATION	OFFSET		C.Y.	S.Y.
MES-A1	194+48.52	60.00' LT.	38"x24"	0.97	30.00
MES-A2	194+48.52	60.00' RT.	38"x24"	0.97	30.00
MES-B1	220+92.92	710.39' LT.	23"x14"	0.53	24.00
MES-C1	247+58.00	60.00' LT.	45"x29"	1.22	33.00
MES-C2	247+58.00	60.00' RT.	45"x29"	1.22	33.00
			TOTALS	**4.91**	**150.00**

MITERED END SECTION NOTE:
QUANTITY CALCULATIONS PER FDOT STANDARD PLANS INDEX 430-021. SODDING QUANTITIES SHOWN ARE INCLUDED AND PAID FOR SEPARATELY AS A PART OF PERFORMANCE TURF, SOD. ALL OTHER MATERIALS AND WORK REQUIRED ARE TO BE INCLUDED IN THE COST OF THE INSTALLATION OF EACH MITERED END SECTION.

P:\CAD\2017\17-372\3-Oaks-Ph1\PLOT_PHASE1\SUM_PAY-ITEMS.dwg, 3 SUMMARY OF PAY ITEMS, 4/30/2019 10:03:55 AM, Avalon Engineering Inc.

DATE	BY	REVISION DESCRIPTION

60% PLANS

AVALON PROJECT: 17-372
PROJ. MGR. Jack Schrager, PE, VP
LEE COUNTY DOT PROJECT: CN160642/ANB
LDOT PROJ. MGR. VINCENT MILLER

AVALON ENGINEERING, INC.
2503 DEL PRADO BLVD. SUITE 200
CAPE CORAL, FLORIDA 33904
FBPE#3128 (239) 573-2077

LEE COUNTY DEPARTMENT OF TRANSPORTATION
(239) 533-8580

THREE OAKS PARKWAY EXTENSION
PHASE 1: FIDDLESTICKS CANAL TO STA 265+20
LEE COUNTY, FLORIDA

SUMMARY OF PAY ITEMS
THREE OAKS PKWY EXT.

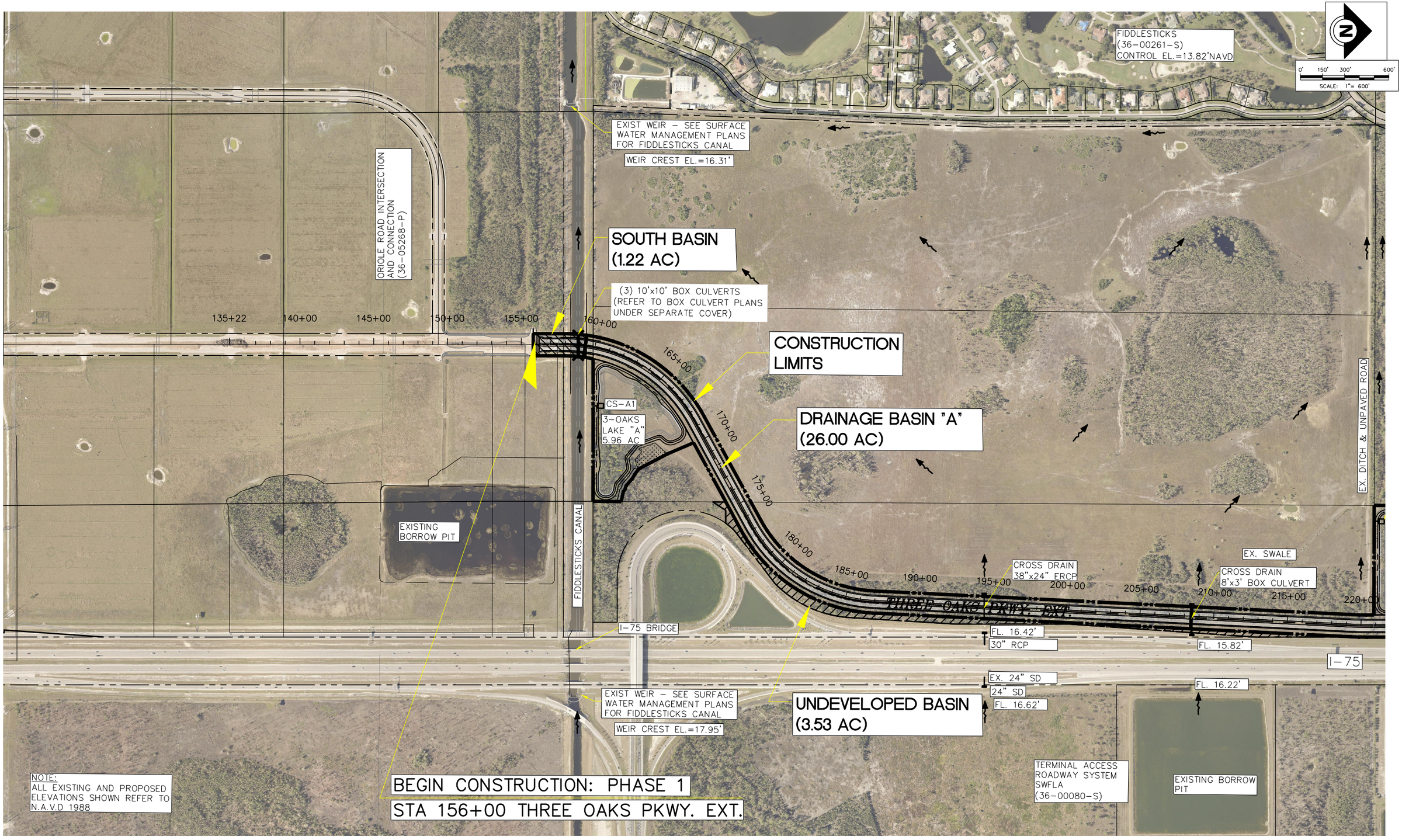

P:\CAD\2017\17-372\3-Oaks-Ph1\PLOT_PHASE1\DRAINAGE BASINS AERIAL MAP.dwg, 4, 4/29/2019 3:33:54 PM, Avalon Engineering Inc.

DATE	BY	REVISION DESCRIPTION

60% PLANS

AVALON PROJECT: 17-372
PROJ. MGR. Jack Schrager, PE, VP
LEE COUNTY DOT PROJECT: CN160642/ANB
LDOT PROJ. MGR. VINCENT MILLER

AVALON ENGINEERING, INC.
2503 DEL PRADO BLVD, SUITE 200
CAPE CORAL, FLORIDA 33904
FBPE#3128 (239) 573-2077

LEE COUNTY DEPARTMENT OF TRANSPORTATION
(239) 533-8580

THREE OAKS PARKWAY EXTENSION
PHASE 1: FIDDLESTICKS CANAL TO STA 265+20
LEE COUNTY, FLORIDA

DRAINAGE BASINS MAP
THREE OAKS PKWY EXT.

SHEET 4 of 110

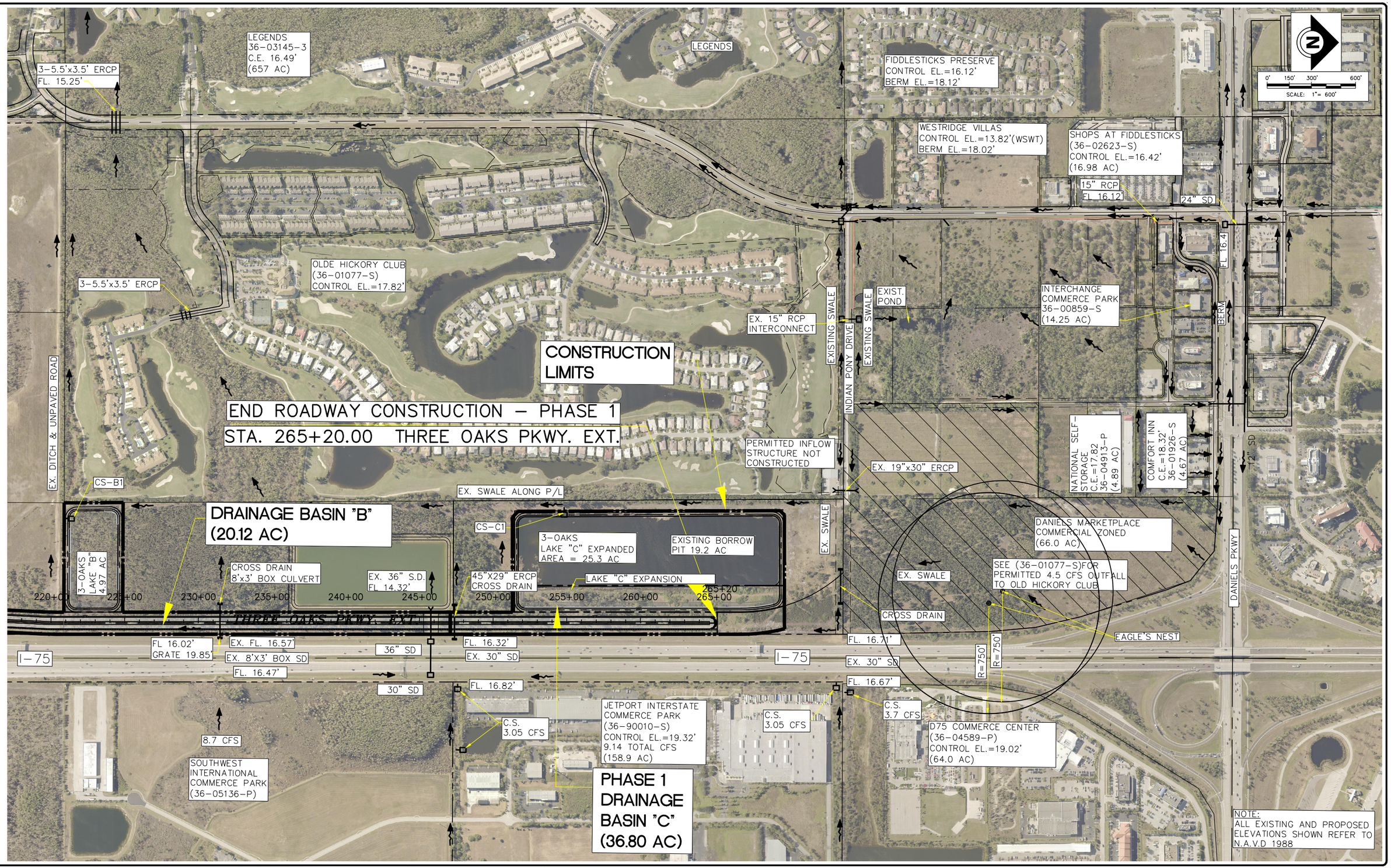

P:\CAD\2017\17-372\3-Oaks-Ph1\PLOT_PHASE1\DRAINAGE BASINS AERIAL MAP.dwg, 5, 4/29/2019 3:34:01 PM, Avalon Engineering Inc.

DATE	BY	REVISION DESCRIPTION

60% PLANS

AVALON PROJECT: 17-372
PROJ. MGR. Jack Schrager, PE, VP
LEE COUNTY DOT PROJECT: CN160642/ANB
LDOT PROJ. MGR. VINCENT MILLER

AVALON ENGINEERING, INC.
2503 DEL PRADO BLVD. SUITE 200
CAPE CORAL, FLORIDA 33904
FBPE#3128 (239) 573-2077

LEE COUNTY DEPARTMENT OF TRANSPORTATION
(239) 533-8580

THREE OAKS PARKWAY EXTENSION
PHASE 1: FIDDLESTICKS CANAL TO STA 265+20
LEE COUNTY, FLORIDA

DRAINAGE BASINS MAP
THREE OAKS PKWY EXT.

SHEET
5 of 110

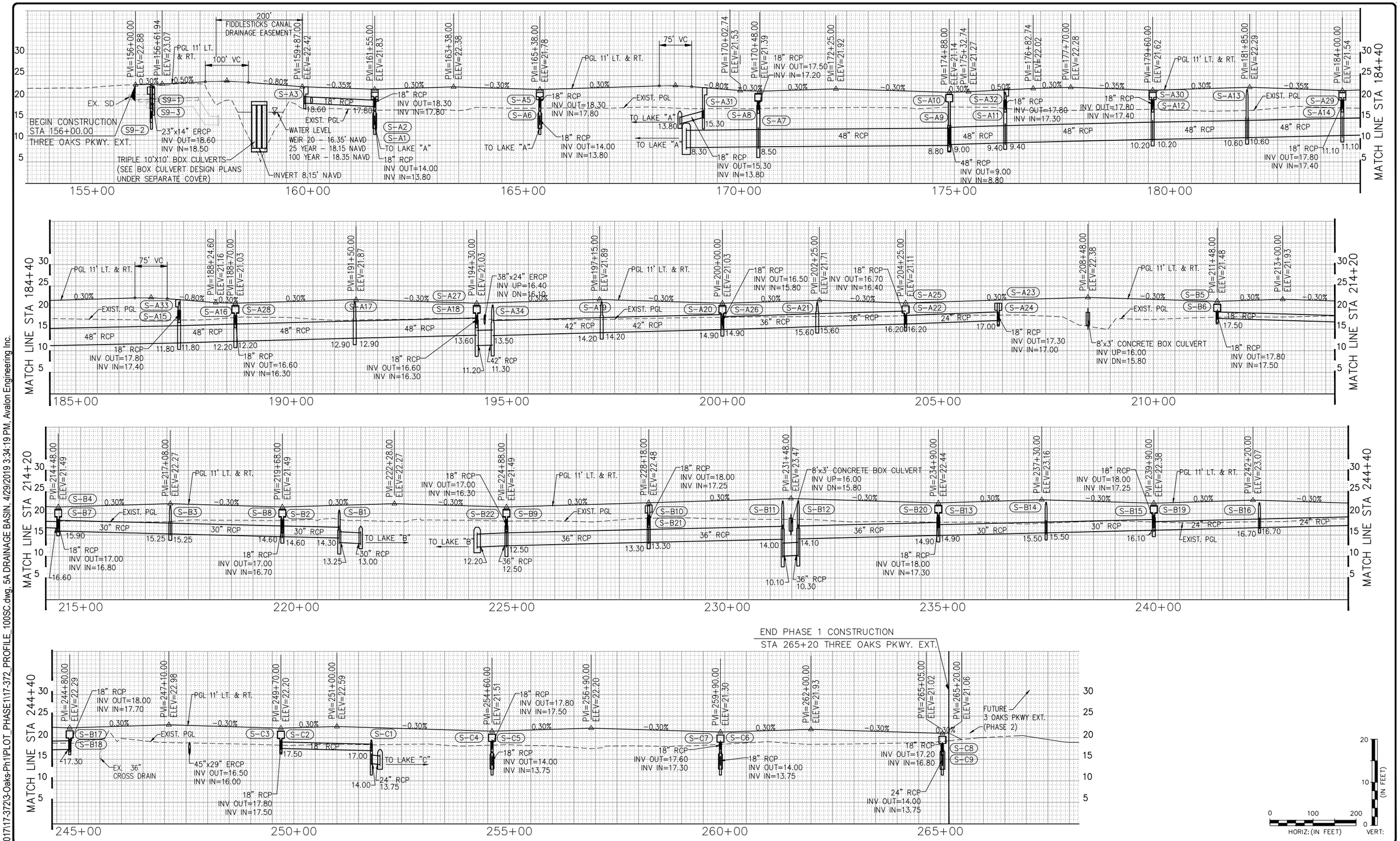

P:\CAD\2017\17-372\3-Oaks-Ph1\PLOT_PHASE1\17-372_PROFILE_100SC.dwg, 5A DRAINAGE BASIN, 4/29/2019 3:34:19 PM, Avalon Engineering Inc.

DATE	BY	REVISION DESCRIPTION

60% PLANS

AVALON PROJECT: 17-372
PROJ. MGR. Jack Schrager, PE, VP
LEE COUNTY DOT PROJECT: CN160642/ANB
LDOT PROJ. MGR. VINCENT MILLER

AVALON ENGINEERING, INC.
2503 DEL PRADO BLVD, SUITE 200
CAPE CORAL, FLORIDA 33904
FBPE#3128 (239) 573-2077

LEE COUNTY DEPARTMENT OF TRANSPORTATION
(239) 533-8580

THREE OAKS PARKWAY EXTENSION
PHASE 1: FIDDLESTICKS CANAL TO STA 265+20
LEE COUNTY, FLORIDA

DRAINAGE BASIN PROFILE

SHEET
5A of 110

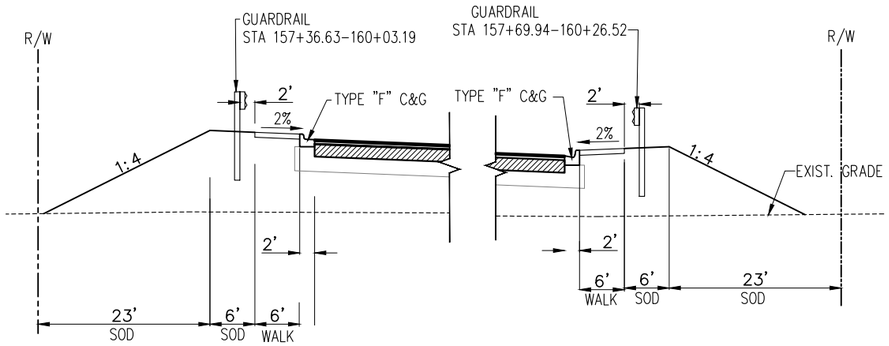

THREE OAKS PARKWAY
SIDEWALK SECTION WITH GUARDRAIL
N.T.S.

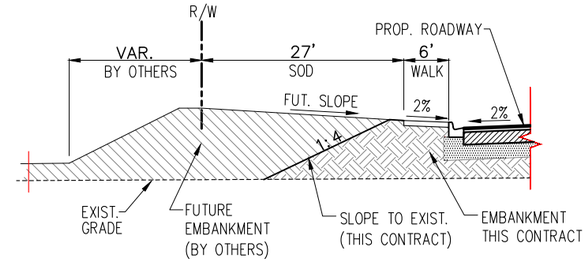

THREE OAKS PARKWAY
ALT. SECTION ALONG
ADJ. PROPERTY (FUTURE) FILL
N.T.S.

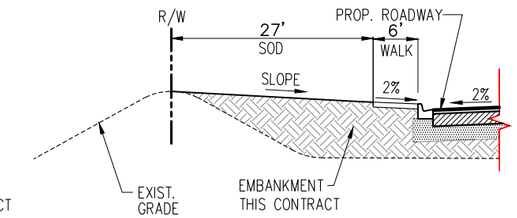

THREE OAKS PARKWAY
ALT. SECTION ALONG
ADJ. ROADWAY PROPERTY THAT
HAS BEEN FILLED
N.T.S.

THREE OAKS PKWY EXTENSION PAVEMENT

SURFACE COURSES

TYPE "SP-9.5" SURFACE COURSE (1") – NOT INCLUDED IN THIS CONTRACT
TYPE "SP-12.5" STRUCTURAL COURSE (2.5")

BASE COURSE PERMITTED

(OPTIONAL BASE GROUP 9)
10" LIMEROCK BASE (LBR 100)

SUBGRADE

12" TYPE B STABILIZATION (MIN. LBR 40)

FOR ADDITIONAL DETAILS SEE FDOT STANDARD PLANS INDEX NO.S 000-510, 000-515, 120-002, 120-001, 160-001, 430-001, 522-001, 522-002, 522-003, AND 524-001.

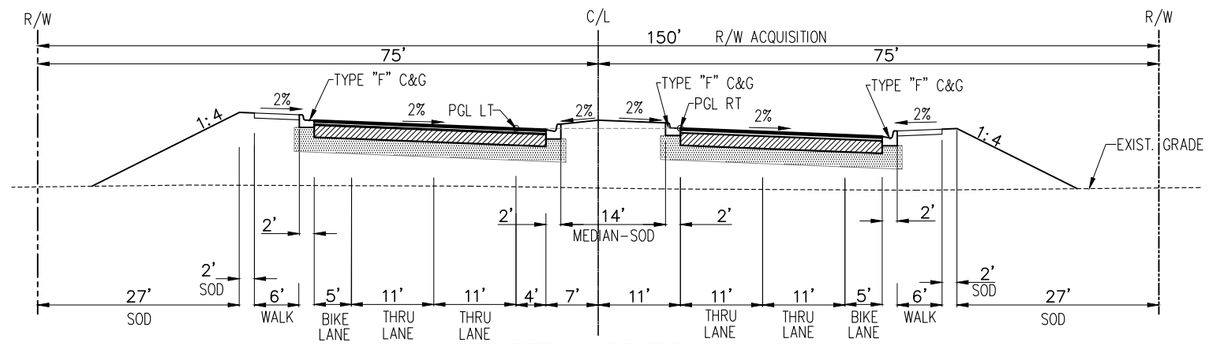

THREE OAKS PARKWAY
TYPICAL SECTION
(SUPER ELEVATION - REVERSE CROWN)
STA 156+61.94 - 170+02.74
STA 175+32.74 - 188+24.60
N.T.S.

TRAFFIC DATA:

THREE OAKS PARKWAY EXT. TO
DANIELS PARKWAY INTERSECTION

DESIGN YEAR EST. 2040 A.A.D.T. = 27,520
DESIGN SPEED = 45 MPH (THREE OAKS PARKWAY)

PROP R/W & CONST.

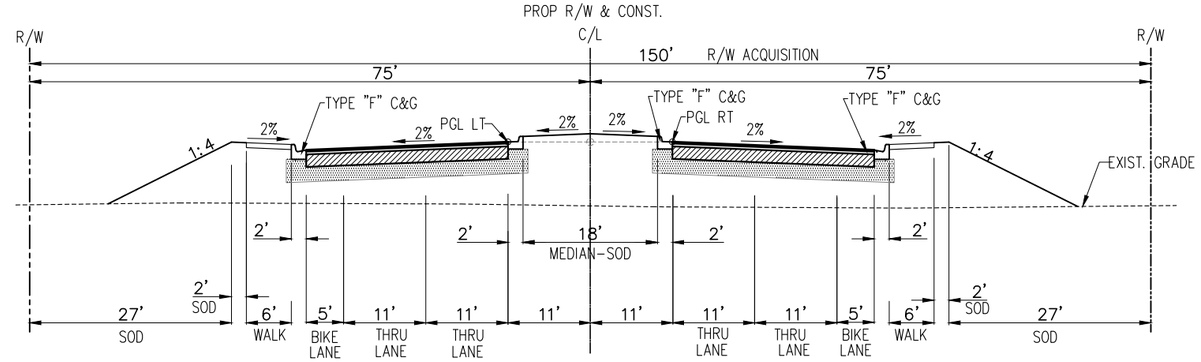

THREE OAKS PARKWAY
TYPICAL SECTION
(NORMAL CROWN)
STA 156+00 - 156+61.94
STA 170+02.74 - 175+32.74
STA 188+24.60 - 265+20
N.T.S.

LEGEND

NEW PAV'T SECTION

MINIMUM PAVEMENT ELEVATIONS AT PROFILE GRADE LINE (PGL) FOR SFWMD PERMITTING		
BASIN	25 YEAR-3 DAY DESIGN STAGE	MIN. PGL ELEVATION
BASIN A	20.37'NAVD	21.03'NAVD
BASIN B	20.57'NAVD	21.29'NAVD
BASIN C	19.57'NAVD	21.02'NAVD
SOUTH BASIN	20.37'NAVD(BASIN A)	22.80'NAVD

NOTE:
1.) ALL EXISTING AND PROPOSED GRADES SHOWN REFER TO N.A.V.D. 1988. TO CONVERT TO N.G.V.D. 1929 ADD 1.18 FT.

P:\CAD\2017\17-372\3-Oaks-Ph1\PLOT_PHASE1\TYP-SECT.dwg, 6, 4/29/2019 3:34:28 PM, Avalon Engineering Inc.

DATE	BY	REVISION DESCRIPTION

60% PLANS

AVALON PROJECT: 17-372
PROJ. MGR. Jack Schrager, PE, VP
LEE COUNTY DOT PROJECT: CN160642/ANB
LDOT PROJ. MGR. VINCENT MILLER

AVALON ENGINEERING, INC.
2503 DEL PRADO BLVD, SUITE 200
CAPE CORAL, FLORIDA 33904
FBPE#3128 (239) 573-2077

LEE COUNTY DEPARTMENT OF TRANSPORTATION
(239) 533-8580

THREE OAKS PARKWAY EXTENSION
PHASE 1: FIDDLESTICKS CANAL TO STA 265+20
LEE COUNTY, FLORIDA

TYPICAL SECTIONS
THREE OAKS PKWY EXT.

SHEET
6 of 110

QUANTITY	No. STR	SIDE	STATION	DESCRIPTION	18" RCP	24" RCP	30" RCP	36" RCP	42" RCP	48" RCP	23"x14" ERCP	38"x24" ERCP	45"x29" ERCP	CURB INLET P-5 <10'	CURB INLET P-5 >10'	CURB INLET J-5 <10'	CURB INLET J-5 >10'	CURB INLET P-6 <10'	CURB INLET P-6 >10'	CURB INLET J-6 <10'	CURB INLET J-6 >10'	MANHOLE P-7 <10'	MANHOLE P-8 >10'	MANHOLE J-8 <10'	MANHOLE J-8 >10'	CONTROL STRUCTURE TYPE 'E' (MOD.)	23"x14" MES	38"x24" MES	45"x29' MES	REMARKS
P	S-A1	RT	161+55.00	INLET, PIPE	75													1												
F																														
P	S-A2	LT	161+55.00	INLET, PIPE	42													1												
F																														
P	S-A3	LT	159+92.50	INLET, PIPE	163									1																
F																														
P	S-A5	RT	165+38.00	INLET, PIPE	75													1												
F																														
P	S-A6	LT	165+38.00	INLET, PIPE	42													1												
F																														
P	S-A7	RT	170+45.00	INLET, PIPE						190											1									
F																														
P	S-A8	LT	170+45.00	INLET, PIPE	75													1												
F																														
P	S-A9	RT	174+88.00	INLET, PIPE						438											1									
F																														
P	S-A10	LT	174+88.00	INLET, PIPE						71											1									
F																														
P	S-A11	LT	176+17.75	MANHOLE, PIPE						125															1					
F																														
P	S-A12	LT	179+60.00	INLET, PIPE						323											1									
F																														
P	S-A13	LT	181+79.00	MANHOLE, PIPE						204															1					
F																														
P	S-A14	LT	184+00.00	INLET, PIPE						206											1									
F																														
P	S-A15	LT	187+39.60	MANHOLE, PIPE						321															1					
F																														
P	S-A16	LT	188+70.00	INLET, PIPE						126										1										
F																														
P	S-A17	LT	191+47.00	MANHOLE, PIPE						272														1						
F																														
P	S-A18	LT	194+30.00	INLET, PIPE						278											1									
F																														
P	S-A19	LT	197+20.00	MANHOLE, PIPE					248															1						
F																														
P	S-A20	LT	200+00.00	INLET, PIPE					275											1										
F																														
P	S-A21	LT	202+20.00	MANHOLE, PIPE				215																1						
F																														
P	S-A22	LT	204+25.00	INLET, PIPE				202										1												
F																														
P	S-A23	LT	206+40.00	INLET, PIPE		212								1																
F																														
P	S-A24	RT	206+40.00	INLET, PIPE	75									1																
F																														
P	S-A25	RT	204+25.00	INLET, PIPE	76													1												
F																														
P	S-A26	RT	200+00.00	INLET, PIPE	73													1												
F																														
P	S-A27	RT	194+30.00	INLET, PIPE	76													1												
F																														
P	S-A28	RT	188+70.00	INLET, PIPE	73													1												
F																														
				SHEET TOTAL	845	212	0	417	523	2554	0	0	0	3	0	0	0	10	0	2	6	0	0	3	3	0	0	0	0	

DATE	BY	REVISION DESCRIPTION

60% PLANS

AVALON PROJECT: 17-372
PROJ. MGR. Jack Schrager, PE, VP
LEE COUNTY DOT PROJECT: CN160642/ANB
LDOT PROJ. MGR. VINCENT MILLER

AVALON ENGINEERING, INC.
2503 DEL PRADO BLVD, SUITE 200
CAPE CORAL, FLORIDA 33904
FBPE#3128 (239) 573-2077

LEE COUNTY DEPARTMENT OF TRANSPORTATION
(239) 533-8580

THREE OAKS PARKWAY EXTENSION
PHASE 1: FIDDLESTICKS CANAL TO STA 265+20
LEE COUNTY, FLORIDA

SUMMARY OF DRAINAGE STRUCTURES

SHEET 7 of 110

P:\CAD\2017\17-372\3-Oaks-Ph1\PLOT_PHASE1\SUMDS.dwg, 7 SUMMARY OF, 4/29/2019 3:34:34 PM, Avalon Engineering Inc.

QUANTITY	No. STR	SIDE	STATION	DESCRIPTION	18" RCP	24" RCP	30" RCP	36" RCP	42" RCP	48" RCP	23"x14" ERCP	38"x24" ERCP	45"x29" ERCP	CURB INLET P-5 <10'	CURB INLET P-5 >10'	CURB INLET J-5 <10'	CURB INLET J-5 >10'	CURB INLET P-6 <10'	CURB INLET P-6 >10'	CURB INLET J-6 <10'	CURB INLET J-6 >10'	MANHOLE P-7 <10'	MANHOLE P-8 >10'	MANHOLE J-8 <10'	MANHOLE J-8 >10'	CONTROL STRUCTURE TYPE 'E' (MOD.)	23"x14" MES	38"x24" MES	45"x29' MES	REMARKS
P	S-A29	RT	184+00.00	INLET, PIPE	39													1												
F																														
P	S-A30	RT	179+60.00	INLET, PIPE	40													1												
F																														
P	S-A31	LT	169+17.75	INLET, PIPE	131									1																
F																														
P	S-A32	RT	176+17.75	INLET, PIPE	51									1																
F																														
P	S-A33	RT	187+39.60	INLET, PIPE	52									1																
F																														
P	S-A34	LT	194+67.00	MANHOLE, PIPE					34																1					
F																														
P	S-B1	LT	221+00.00	MANHOLE, PIPE			81																	1						
F																														
P	S-B2	LT	219+68.00	INLET, PIPE			129													1										
F																														
P	S-B3	LT	217+08.00	MANHOLE, PIPE			255																	1						
F																														
P	S-B4	LT	214+48.00	INLET, PIPE			255													1										
F																														
P	S-B5	LT	211+48.00	INLET, PIPE	296													1												
F																														
P	S-B6	RT	211+48.00	INLET, PIPE	76													1												
F																														
P	S-B7	RT	214+48.00	INLET, PIPE	73													1												
F																														
P	S-B8	RT	219+68.00	INLET, PIPE	73													1												
F																														
P	S-B9	LT	224+88.00	INLET, PIPE				113													1									
F																														
P	S-B10	LT	228+18.00	INLET, PIPE				325								1														
F																														
P	S-B11	LT	231+29.00	MANHOLE, PIPE				306																	1					
F																														
P	S-B12	LT	231+65.00	MANHOLE, PIPE				31																	1					
F																														
P	S-B13	LT	234+90.00	INLET, PIPE				320												1										
F																														
P	S-B14	LT	237+40.00	MANHOLE, PIPE			247																	1						
F																														
P	S-B15	LT	239+90.00	INLET, PIPE			247													1										
F																														
P	S-B16	LT	242+35.00	MANHOLE, PIPE		242																		1						
F																														
P	S-B17	LT	244+80.00	INLET, PIPE		242												1												
F																														
P	S-B18	RT	244+80.00	INLET, PIPE	75													1												
F																														
P	S-B19	RT	239+90.00	INLET, PIPE	73													1												
F																														
P	S-B20	RT	234+90.00	INLET, PIPE	73													1												
F																														
				SHEET TOTAL	1052	484	1214	1095	34	0	0	0	0	3	0	1	0	10	0	4	1	0	0	4	3	0	0	0	0	

DATE	BY	REVISION DESCRIPTION

60% PLANS

AVALON PROJECT: 17-372
PROJ. MGR. Jack Schrager, PE, VP
LEE COUNTY DOT PROJECT: CN160642/ANB
LDOT PROJ. MGR. VINCENT MILLER

AVALON ENGINEERING, INC.
2503 DEL PRADO BLVD, SUITE 200
CAPE CORAL, FLORIDA 33904
FBPE#3128 (239) 573-2077

LEE COUNTY DEPARTMENT OF TRANSPORTATION
(239) 533-8580

THREE OAKS PARKWAY EXTENSION
PHASE 1: FIDDLESTICKS CANAL TO STA 265+20
LEE COUNTY, FLORIDA

SUMMARY OF DRAINAGE STRUCTURES

SHEET 8 of 110

P:\CAD\2017\17-372\3-Oaks-Ph1\PLOT_PHASE1\SUMDS.dwg, 8 SUMMARY OF, 4/29/2019 3:34:36 PM, Avalon Engineering Inc.

QUANTITY	No. STR	SIDE	STATION	DESCRIPTION	18" RCP	24" RCP	30" RCP	36" RCP	42" RCP	48" RCP	23"x14" ERCP	38"x24" ERCP	45"x29" ERCP	CURB INLET P-5 <10'	CURB INLET P-5 >10'	CURB INLET J-5 <10'	CURB INLET J-5 >10'	CURB INLET P-6 <10'	CURB INLET P-6 >10'	CURB INLET J-6 <10'	CURB INLET J-6 >10'	MANHOLE P-7 <10'	MANHOLE P-7 >10'	MANHOLE J-8 <10'	MANHOLE J-8 >10'	CONTROL STRUCTURE TYPE 'E' (MOD.)	23"x14" MES	38"x24" MES	45"x29' MES	REMARKS
P	S-B21	RT	228+18.00	INLET, PIPE	73									1																
F																														
P	S-B22	RT	224+88.00	INLET, PIPE	76													1												
F																														
P	S-C1	LT	251+80.00	MANHOLE, PIPE		62																		1						
F																														
P	S-C2	LT	249+70.00	INLET, PIPE	209													1												
F			`																											
P	S-C3	RT	249+70.00	INLET, PIPE	75													1												
F																														
P	S-C4	LT	254+60.00	INLET, PIPE	75													1												
F																														
P	S-C5	RT	254+60.00	INLET, PIPE	76													1												
F																														
P	S-C6	LT	259+90.00	INLET, PIPE	75													1												
F																														
P	S-C7	RT	259+90.00	INLET, PIPE	76													1												
F																														
P	S-C8	LT	265+05.00	INLET, PIPE		75												1												
F																														
P	S-C9	RT	265+05.00	INLET, PIPE	76													1												
F																														
P	CS-A1	RT	161+54.38	INLET, PIPES							33															1				LAKE "A"
F																														
P	CS-B1	LT	221+21.42	INLET, PIPE							25															1				LAKE "B"
F																														
P	CS-C1	LT	254+82.75	INLET, PIPE							70															1				LAKE "C"
F																														
P	MES-A1,A2		194+48.52	MES, PIPE								115																2		
F																														
P	MES-B1	LT	220+92.92	MES, PIPE																							1			
F																														
P	MES-C1,C2		247+58.00	MES, PIPE									115																2	
F																														
P	S9-1	LT	156+36.34	INLET, PIPE	11									1																
F																														
P	S9-2	RT	156+42.00	MANHOLE																		1								
F																														
P	S9-3	RT	156+35.67	INLET, PIPE							15			1																
F																														
P	S9-4	LT	156+36.88	MANHOLE, PIPE	19																	1								
F																														
P	EW-A1	RT	161+88.80	ENDWALL, PIPE	21																									
F																														
P	EW-B1	LT	221+41.59	ENDWALL, PIPE	18																									
F																														
P	EW-C1	LT	254+82.80	ENDWALL, PIPE	18																									
F																														
				SHEET TOTAL	898	137	0	0	0	0	143	115	115	3	0	0	0	9	0	0	0	2	0	1	0	3	1	2	2	

DATE	BY	REVISION DESCRIPTION

60% PLANS

AVALON PROJECT: 17-372
PROJ. MGR. Jack Schrager, PE, VP
LEE COUNTY DOT PROJECT: CN160642/ANB
LDOT PROJ. MGR. VINCENT MILLER

AVALON ENGINEERING, INC.
2503 DEL PRADO BLVD, SUITE 200
CAPE CORAL, FLORIDA 33904
FBPE#3128 (239) 573-2077

LEE COUNTY DEPARTMENT OF TRANSPORTATION
(239) 533-8580

THREE OAKS PARKWAY EXTENSION
PHASE 1: FIDDLESTICKS CANAL TO STA 265+20
LEE COUNTY, FLORIDA

SUMMARY OF DRAINAGE STRUCTURES

P:\CAD\2017\17-372\3-Oaks-Ph1\PLOT_PHASE1\SUMDS.dwg, 9 SUMMARY OF, 4/29/2019 3:34:41 PM, Avalon Engineering Inc.

DRAINAGE STRUCTURES

S9-1
CONST. CURB INLET TYPE'P-5' <10'
FDOT Index No. 425-021
STA 156+36.34 (-46.75 L)
LIP (EOP) ELEV=22.35
SUMP=14.80
INV OUT (W)= 16.80 18" RCP

S9-2
CONST. MANHOLE TYPE 'P-7' <10'
FDOT Index No. 425-001
STA 156+42.00 (61.70 R)
RIM=22.53
SUMP=16.50
INV IN(W)= 18.50 23" RCP

S9-3
CONST. CURB INLET TYPE'P-5' <10'
FDOT Index No. 425-021
STA 156+35.67 (44.51 R)
LIP (EOP) ELEV=22.08
SUMP=18.00
INV OUT (E)= 18.60 23" x 14" ERCP

S9-4
CONST. MANHOLE TYPE 'P-7' <10'
FDOT Index No. 425-001
STA 156+36.88 (-61.74 L)
RIM=22.69
SUMP=13.05
INV IN(E)= 16.70 18" RCP
INV OUT (S)= 15.05 18" RCP

S-A1
CONST. CURB INLET TYPE 'P-6' <10'
FDOT Index No. 425-021
STA 161+55.00 (39.25 R)
LIP (EOP) ELEV=21.29
SUMP=12.00
INV IN(SW)= 17.80 18" RCP
INV IN(W)= 17.80 18" RCP
INV OUT (E)= 14.00 18" RCP

S-A2
CONST. CURB INLET TYPE 'P-6' <10'
FDOT Index No. 425-021
STA 161+55.00 (-5.75 L)
LIP (EOP) ELEV=21.99
SUMP=17.70
INV OUT (E)= 18.30 18" RCP

S-A3
CONST. CURB INLET TYPE'P-5' <10'
FDOT Index No. 425-021
STA 159+92.50 (-5.75 L)
LIP (EOP) ELEV=22.56
SUMP=18.00
INV OUT (NE)= 18.60 18" RCP

S-A5
CONST. CURB INLET TYPE 'P-6' <10'
FDOT Index No. 425-021
STA 165+38.00 (39.25 R)
LIP (EOP) ELEV=21.24
SUMP=12.00
INV IN(NW)= 17.80 18" RCP
INV OUT (SE)= 14.00 18" RCP

S-A6
CONST. CURB INLET TYPE 'P-6' <10'
FDOT Index No. 425-021
STA 165+38.00 (-5.75 L)
LIP (EOP) ELEV=21.70
SUMP=17.70
INV OUT (SE)= 18.30 18" RCP

S-A7
CONST. CURB INLET TYPE 'J-6' >10'
FDOT Index No. 425-021
STA 170+45.00 (38.00 R)
LIP (EOP) ELEV=20.86
SUMP=6.50
INV IN(NW)= 17.20 18" RCP
INV IN(NE)= 8.50 48" RCP
INV OUT (SW)= 8.50 48" RCP

S-A8
CONST. CURB INLET TYPE 'P-6' <10'
FDOT Index No. 425-021
STA 170+45.00 (-39.25 L)
LIP (EOP) ELEV=20.86
SUMP=16.90
INV OUT (SE)= 17.50 18" RCP

S-A9
CONST. CURB INLET TYPE 'J-6' >10'
FDOT Index No. 425-021
STA 174+88.00 (38.00 R)
LIP (EOP) ELEV=20.60
SUMP=7.80
INV IN(NW)= 8.80 48" RCP
INV OUT (SW)= 8.80 48" RCP

S-A10
CONST. CURB INLET TYPE 'J-6' >10'
FDOT Index No. 425-021
STA 174+88.00 (-38.00 L)
LIP (EOP) ELEV=20.60
SUMP=8.00
INV IN(NE)= 9.00 48" RCP
INV OUT (SE)= 9.00 48" RCP

S-A11
CONST. MANHOLE TYPE 'J-8' >10'
FDOT Index No. 425-001
STA 176+17.75 (-50.00 L)
LIP (EOP) ELEV=21.31
SUMP=8.40
INV IN(SE)= 17.30 18" RCP
INV IN(NE)= 9.40 48" RCP
INV OUT (SW)= 9.40 48" RCP

S-A12
CONST. CURB INLET TYPE 'J-6' >10'
FDOT Index No. 425-021
STA 179+60.00 (-38.00 L)
LIP (EOP) ELEV=21.08
SUMP=9.20
INV IN(SE)= 17.40 18" RCP
INV IN(NE)= 10.20 48" RCP
INV OUT (SW)= 10.20 48" RCP

S-A13
CONST. MANHOLE TYPE 'J-8' >10'
FDOT Index No. 425-001
STA 181+79.00 (-50.00 L)
LIP (EOP) ELEV=21.88
SUMP=9.60
INV IN(NE)= 10.60 48" RCP
INV OUT (SW)= 10.60 48" RCP

S-A14
CONST. CURB INLET TYPE 'J-6' >10'
FDOT Index No. 425-021
STA 184+00.00 (-38.00 L)
LIP (EOP) ELEV=21.00
SUMP=10.10
INV IN(N)= 11.10 48" RCP
INV IN(E)= 17.40 18" RCP
INV OUT (SW)= 11.10 48" RCP

S-A15
CONST. MANHOLE TYPE 'J-8' >10'
FDOT Index No. 425-001
STA 187+39.60 (-50.00 L)
RIM=21.30
SUMP=10.80
INV IN(E)= 17.40 18" RCP
INV IN(N)= 11.80 48" RCP
INV OUT (S)= 11.80 48" RCP

S-A16
CONST. CURB INLET TYPE 'J-6' <10'
FDOT Index No. 425-021
STA 188+70.00 (-38.00 L)
LIP (EOP) ELEV=20.49
SUMP=11.20
INV IN(E)= 16.30 18" RCP
INV IN(N)= 12.20 48" RCP
INV OUT (S)= 12.20 48" RCP

S-A17
CONST. MANHOLE TYPE 'J-8' <10'
FDOT Index No. 425-001
STA 191+47.00 (-50.00 L)
RIM=21.32
SUMP=11.90
INV IN(N)= 12.90 48" RCP
INV OUT (S)= 12.90 48" RCP

S-A18
CONST. CURB INLET TYPE 'J-6' >10'
FDOT Index No. 425-021
STA 194+30.00 (-38.00 L)
LIP (EOP) ELEV=20.49
SUMP=9.20
INV IN(N)= 11.20 42" RCP
INV IN(E)= 16.30 18" RCP
INV OUT (S)= 13.60 48" RCP

S-A19
CONST. MANHOLE TYPE 'J-8' <10'
FDOT Index No. 425-001
STA 197+20.00 (-50.00 L)
RIM=21.33
SUMP=13.20
INV IN(N)= 14.20 42" RCP
INV OUT (S)= 14.20 42" RCP

S-A20
CONST. CURB INLET TYPE 'J-6' <10'
FDOT Index No. 425-021
STA 200+00.00 (-38.00 L)
LIP (EOP) ELEV=20.49
SUMP=13.90
INV IN(N)= 14.90 36" RCP
INV IN(E)= 15.80 18" RCP
INV OUT (S)= 14.90 42" RCP

S-A21
CONST. MANHOLE TYPE 'J-8' <10'
FDOT Index No. 425-001
STA 202+20.00 (-50.00 L)
LIP (EOP) ELEV=21.30
SUMP=14.60
INV IN(N)= 15.60 36" RCP
INV OUT (S)= 15.60 36" RCP

S-A22
CONST. CURB INLET TYPE 'P-6' <10'
FDOT Index No. 425-021
STA 204+25.00 (-39.25 L)
LIP (EOP) ELEV=20.56
SUMP=15.20
INV IN(N)= 16.20 24" RC[
INV IN(E)= 16.40 18" RCP
INV(OUT)= 16.20 (36" RCP

S-A23
CONST. CURB INLET TYPE 'P-5' <10'
FDOT Index No. 425-021
STA 206+40.00 (-39.25 L)
LIP (EOP) ELEV=21.21
SUMP=16.40
INV IN(E)= 17.00 18" RCP
INV OUT (S)= 17.00 24" RCP

S-A24
CONST. CURB INLET TYPE 'P-5' <10'
FDOT Index No. 425-021
STA 206+40.00 (39.25 R)
LIP (EOP) ELEV=21.21
SUMP=16.70
INV OUT (W)= 17.30 18" RCP

S-A25
CONST. CURB INLET TYPE 'P-6' <10'
FDOT Index No. 425-021
STA 204+25.00 (39.25 R)
LIP (EOP) ELEV=20.57
SUMP=16.10
INV OUT (W)= 16.70 18" RCP

S-A26
CONST. CURB INLET TYPE 'P-6' <10'
FDOT Index No. 425-021
STA 200+00.00 (39.25 R)
LIP (EOP) ELEV=20.49
SUMP=15.90
INV OUT (W)= 16.50 18" RCP

S-A27
CONST. CURB INLET TYPE 'P-6' <10'
FDOT Index No. 425-021
STA 194+30.00 (39.25 R)
LIP (EOP) ELEV=20.49
SUMP=16.00
INV OUT (W)= 16.60 18" RCP

S-A28
CONST. CURB INLET TYPE 'P-6' <10'
FDOT Index No. 425-021
STA 188+70.00 (39.25 R)
LIP (EOP) ELEV=20.49
SUMP=16.00
INV OUT (W)= 16.60 18" RCP

S-A29
CONST. CURB INLET TYPE 'P-6' <10'
FDOT Index No. 425-021
STA 184+00.00 (5.75 R)
LIP (EOP) ELEV=21.46
SUMP=17.20
INV OUT (W)= 17.80 18" RCP

S-A30
CONST. CURB INLET TYPE 'P-6' <10'
FDOT Index No. 425-021
STA 179+60.00 (5.75 R)
LIP (EOP) ELEV=21.54
SUMP=17.20
INV OUT (NW)= 17.80 18" RCP

S-A31
CONST. CURB INLET TYPE 'P-5' <10'
FDOT Index No. 425-021
STA 169+17.75 (-5.75 L)
LIP (EOP) ELEV=22.19
SUMP=13.30
INV OUT (S)= 15.30 18" RCP

S-A32
CONST. CURB INLET TYPE 'P-5' <10'
FDOT Index No. 425-021
STA 176+17.75 (5.75 R)
LIP (EOP) ELEV=21.75
SUMP=17.20
INV OUT (NW)= 17.80 18" RCP

S-A33
CONST. CURB INLET TYPE 'P-5' <10'
FDOT Index No. 425-021
STA 187+39.60 (5.75 R)
LIP (EOP) ELEV=22.00
SUMP=17.20
INV OUT (W)= 17.80 18" RCP

S-A34
CONST. MANHOLE TYPE 'J-8' >10'
FDOT Index No. 425-001
STA 194+67.00 (-50.00 L)
RIM=20.60
SUMP=9.30
INV IN(N)= 13.50 42" RCP
INV OUT (S)= 11.30 42" RCP

S-B1
CONST. MANHOLE TYPE 'J-8' <10'
FDOT Index No. 425-001
STA 221+00.00 (-60.00 L)
RIM=20.72
SUMP=11.25
INV IN(S)= 14.30 30" RCP
INV OUT (NW)= 13.25 30" RCP

S-B2
CONST. CURB INLET TYPE 'J-6' <10'
FDOT Index No. 425-021
STA 219+68.00 (-38.00 L)
LIP (EOP) ELEV=20.95
SUMP=13.60
INV IN(E)= 17.00 18" RCP
INV IN(S)= 14.60 30" RCP
INV OUT (N)= 14.60 30" RCP

S-B3
CONST. MANHOLE TYPE 'J-8' <10'
FDOT Index No. 425-001
STA 217+08.00 (-50.00 L)
RIM=21.72
SUMP=14.25
INV IN(S)= 15.25 30" RCP
INV OUT (N)= 15.25 30" RCP

S-B4
CONST. CURB INLET TYPE 'J-6' <10'
FDOT Index No. 425-021
STA 214+48.00 (-38.00 L)
LIP (EOP) ELEV=20.95
SUMP=15.30
INV IN(E)= 16.80 18" RCP
INV IN(S)= 16.60 18" RCP
INV OUT (N)= 15.90 30" RCP

S-B5
CONST. CURB INLET TYPE 'P-6' <10'
FDOT Index No. 425-021
STA 211+48.00 (-39.25 L)
LIP (EOP) ELEV=20.93
SUMP=16.90
INV IN(E)= 17.50 18" RCP
INV OUT (N)= 17.50 18" RCP

S-B6
CONST. CURB INLET TYPE 'P-6' <10'
FDOT Index No. 425-021
STA 211+48.00 (39.25 R)
LIP (EOP) ELEV=20.93
SUMP=17.20
INV OUT (W)= 17.80 18" RCP

S-B7
CONST. CURB INLET TYPE 'P-6' <10'
FDOT Index No. 425-021
STA 214+48.00 (39.25 R)
LIP (EOP) ELEV=20.95
SUMP=16.40
INV OUT (W)= 17.00 18" RCP

S-B8
CONST. CURB INLET TYPE 'P-6' <10'
FDOT Index No. 425-021
STA 219+68.00 (39.25 R)
LIP (EOP) ELEV=20.95
SUMP=16.10
INV OUT (W)= 16.70 18" RCP

S-B9
CONST. CURB INLET TYPE 'J-6' >10'
FDOT Index No. 425-021
STA 224+88.00 (-38.00 L)
LIP (EOP) ELEV=20.95
SUMP=10.50
INV IN(E)= 16.30 18" RCP
INV IN(N)= 12.50 36" RCP
INV OUT (SW)= 12.50 36" RCP

S-B10
CONST. CURB INLET TYPE 'J-5' <10'
FDOT Index No. 425-021
STA 228+18.00 (-38.00 L)
LIP (EOP) ELEV=21.94
SUMP=12.30
INV IN(E)= 17.25 18" RCP
INV IN(N)= 13.30 36" RCP
INV OUT (S)= 13.30 36" RCP

S-B11
CONST. MANHOLE TYPE 'J-8' >10'
FDOT Index No. 425-001
STA 231+29.00 (-50.00 L)
RIM=22.86
SUMP=8.10
INV IN(N)= 10.10 36" RCP
INV OUT (S)= 14.00 36" RCP

S-B12
CONST. MANHOLE TYPE 'J-8' >10'
FDOT Index No. 425-001
STA 231+65.00 (-50.00 L)
RIM=22.87
SUMP=8.30
INV IN(N)= 14.10 36" RCP
INV OUT (S)= 10.30 36" RCP

S-B13
CONST. CURB INLET TYPE 'J-6' <10'
FDOT Index No. 425-021
STA 234+90.00 (-38.00 L)
LIP (EOP) ELEV=21.90
SUMP=13.90
INV IN(E)= 17.30 18" RCP
INV IN(N)= 14.90 30" RCP
INV OUT (S)= 14.90 36" RCP

S-B14
CONST. MANHOLE TYPE 'J-8' <10'
FDOT Index No. 425-001
STA 237+40.00 (-50.00 L)
RIM=22.59
SUMP=14.50
INV IN(N)= 15.50 30" RCP
INV OUT (S)= 15.50 30" RCP

S-B15
CONST. CURB INLET TYPE 'J-6' <10'
FDOT Index No. 425-021
STA 239+90.00 (-38.00 L)
LIP (EOP) ELEV=21.84
SUMP=15.10
INV IN(E)= 17.25 18" RCP
INV IN(N)= 16.10 24" RCP
INV OUT (S)= 16.10 30" RCP

S-B16
CONST. MANHOLE TYPE 'J-8' <10'
FDOT Index No. 425-001
STA 242+35.00 (-50.00 L)
RIM=22.48
SUMP=16.10
INV IN(N)= 16.70 24" RCP
INV OUT (S)= 16.70 24" RCP

S-B17
CONST. CURB INLET TYPE 'P-6' <10'
FDOT Index No. 425-021
STA 244+80.00 (-39.25 L)
LIP (EOP) ELEV=21.75
SUMP=16.70
INV IN(E)= 17.70 18" RCP
INV OUT (S)= 17.30 24" RCP

S-B18
CONST. CURB INLET TYPE 'P-6' <10'
FDOT Index No. 425-021
STA 244+80.00 (39.25 R)
LIP (EOP) ELEV=21.75
SUMP=17.40
INV OUT (W)= 18.00 18" RCP

NOTES:
1.) ALL EXISTING AND PROPOSED GRADES SHOWN REFER TO N.A.V.D. 1988. TO CONVERT TO N.G.V.D. 1929 ADD 1.18 FT.
2.) SEE SHT. 11 FOR ADDITIONAL NOTES.

P:\CAD\2017\17-372\3-Oaks-Ph1\PLOT_PHASE1\DRAINAGE STRUCTURE DATA.dwg, 10 DRAINAGE STRUCTURE DATA, 4/29/2019 3:34:54 PM, Avalon Engineering Inc.

DATE	BY	REVISION DESCRIPTION

60% PLANS

AVALON PROJECT: 17-372
PROJ. MGR. Jack Schrager, PE, VP
LEE COUNTY DOT PROJECT: CN160642/ANB
LDOT PROJ. MGR. VINCENT MILLER

AVALON ENGINEERING, INC.
2503 DEL PRADO BLVD, SUITE 200
CAPE CORAL, FLORIDA 33904
FBPE#3128 (239) 573-2077

LEE COUNTY DEPARTMENT OF TRANSPORTATION
(239) 533-8580

THREE OAKS PARKWAY EXTENSION
PHASE 1: FIDDLESTICKS CANAL TO STA 265+20
LEE COUNTY, FLORIDA

DRAINAGE STRUCTURE DATA
THREE OAKS PKWY EXT.

DRAINAGE STRUCTURES

S-B19
CONST. CURB INLET TYPE 'P-6' <10'
FDOT Index No. 425-021
STA 239+90.00 (39.25 R)
LIP (EOP) ELEV=21.84
SUMP=17.40
INV OUT (W)= 18.00 18" RCP

S-B20
CONST. CURB INLET TYPE 'P-6' <10'
FDOT Index No. 425-021
STA 234+90.00 (39.25 R)
LIP (EOP) ELEV=21.90
SUMP=17.40
INV OUT (W)= 18.00 18" RCP

S-B21
CONST. CURB INLET TYPE 'P-5' <10'
FDOT Index No. 425-021
STA 228+18.00 (39.25 R)
LIP (EOP) ELEV=21.94
SUMP=17.40
INV OUT (W)= 18.00 18" RCP

S-B22
CONST. CURB INLET TYPE 'P-6' <10'
FDOT Index No. 425-021
STA 224+88.00 (39.25 R)
LIP (EOP) ELEV=20.95
SUMP=16.40
INV OUT (W)= 17.00 18" RCP

S-C1
CONST. MANHOLE TYPE 'J-8' <10'
FDOT Index No. 425-001
STA 251+80.00 (-64.00 L)
RIM=19.46
SUMP=12.00
INV IN(S)= 17.00 18" RCP
INV OUT (W)= 14.00 24" RCP

S-C2
CONST. CURB INLET TYPE 'P-6' <10'
FDOT Index No. 425-021
STA 249+70.00 (-39.25 L)
LIP (EOP) ELEV=21.66
SUMP=16.90
INV IN(E)= 17.50 18" RCP
INV OUT (N)= 17.50 18" RCP

S-C3
CONST. CURB INLET TYPE 'P-6' <10'
FDOT Index No. 425-021
STA 249+70.00 (39.25 R)
LIP (EOP) ELEV=21.66
SUMP=17.20
INV OUT (W)= 17.80 18" RCP

S-C4
CONST. CURB INLET TYPE 'P-6' <10'
FDOT Index No. 425-021
STA 254+60.00 (-39.25 L)
LIP (EOP) ELEV=20.97
SUMP=12.00
INV IN(E)= 17.50 18" RCP
INV OUT (W)= 14.00 18" RCP

S-C5
CONST. CURB INLET TYPE 'P-6' <10'
FDOT Index No. 425-021
STA 254+60.00 (39.25 R)
LIP (EOP) ELEV=20.97
SUMP=17.20
INV OUT (W)= 17.80 18" RCP

S-C6
CONST. CURB INLET TYPE 'P-6' <10'
FDOT Index No. 425-021
STA 259+90.00 (-39.25 L)
LIP (EOP) ELEV=20.76
SUMP=12.00
INV IN(E)= 17.30 18" RCP
INV OUT (W)= 14.00 18" RCP

S-C7
CONST. CURB INLET TYPE 'P-6' <10'
FDOT Index No. 425-021
STA 259+90.00 (39.25 R)
LIP (EOP) ELEV=20.76
SUMP=17.00
INV OUT (W)= 17.60 18" RCP

S-C8
CONST. CURB INLET TYPE 'P-6' <10'
FDOT Index No. 425-021
STA 265+05.00 (-39.25 L)
LIP (EOP) ELEV=20.48
SUMP=12.00
INV IN(E)= 16.80 18" RCP
INV OUT (W)= 14.00 24" RCP

S-C9
CONST. CURB INLET TYPE 'P-6' <10'
FDOT Index No. 425-021
STA 265+05.00 (39.25 R)
LIP (EOP) ELEV=20.48
SUMP=16.60
INV OUT (W)= 17.20 18" RCP

ENDWALLS

EW-A1
CONST. 18" STRAIGHT CONC. ENDWALL
FDOT INDEX 430-030
STA 161+88.80 (368.06 R)
INV OUT= 13.80 (S)

EW-A2
CONST. 18" STRAIGHT CONC. ENDWALL
FDOT INDEX 430-030
STA 161+55.00 (116.00 R)
INV IN= 13.80 (W)

EW-A3
CONST. 18" STRAIGHT CONC. ENDWALL
FDOT INDEX 430-030
STA 165+38.00 (116.00 R)
INV IN= 13.80 (NW)

EW-A4
CONST. 48" STRAIGHT CONC. ENDWALL
FDOT INDEX 430-030
STA 168+78.00 (135.00 R)
INV IN= 8.30 (NE)

EW-A5
CONST. 18" STRAIGHT CONC. ENDWALL
FDOT INDEX 430-030
STA 168+63.00 (116.00 R)
INV IN= 13.80 (N)

EW-B1
CONST. 18" STRAIGHT CONC. ENDWALL
FDOT INDEX 430-030
STA 221+41.59 (-710.26 L)
INV OUT= 13.80 (S)

EW-B2
CONST. 30" STRAIGHT CONC. ENDWALL
FDOT INDEX 430-030
STA 221+50.00 (-127.00 L)
INV IN= 13.00 (SE)

EW-B3
CONST. 36" STRAIGHT CONC. ENDWALL
FDOT INDEX 430-030
STA 224+20.00 (-133.00 L)
INV IN= 12.20 (NE)

EW-C1
CONST. 18" STRAIGHT CONC. ENDWALL
FDOT INDEX 425-030
STA 254+82.80 (-704.39 L)
INV OUT= 13.80 (W)

EW-C2
CONST. 24" STRAIGHT CONC. ENDWALL
FDOT INDEX 430-030
STA 252+00.00 (-124.00 L)
INV IN= 13.75 (E)

EW-C3
CONST. 18" STRAIGHT CONC. ENDWALL
FDOT INDEX 430-030
STA 254+60.00 (-116.00 L)
INV IN= 13.75 (E)

EW-C4
CONST. 18" STRAIGHT CONC. ENDWALL
FDOT INDEX 430-030
STA 259+90.00 (-116.00 L)
INV IN= 13.75 (E)

EW-C5
CONST. 24" STRAIGHT CONC. ENDWALL
FDOT INDEX 430-030
STA 265+05.00 (-116.00 L)
INV IN= 13.75 (E)

MITERED END SECTIONS

MES-A1
CONST. 38"x24" ERCP MES
FDOT INDEX 425-021
STA 194+48.52 (-60.00 L)
INV IN= 16.10 (E)

MES-A2
CONST. 38"x24" ERCP MES
FDOT INDEX 425-021
STA 194+48.52 (60.00 R)
INV OUT= 16.40 (W)

MES-B1
CONST. 23"x14" ERCP MES
FDOT INDEX 425-021
STA 220+92.92 (-710.39 L)
INV IN= 17.30 (N)

MES-C1
CONST. 45"x29" ERCP MES
FDOT INDEX 425-021
STA 247+58.00 (-60.00 L)
INV IN= 16.00 (E)

MES-C2
CONST. 45"x29" ERCP MES
FDOT INDEX 425-021
STA 247+58.00 (60.00 R)
INV OUT= 16.50 (W)

CONTROL STRUCTURES

CS-A1
STA 161+54.38 (376.30 R)
CONST. FDOT Index No. 425-052
Inlet Type "E" (Modified)
GRATE=20.87
TOP OF WALL (WEIR) EL.=20.37
RECT. NOTCH 0.25'H X 0.88'W
RECT. NOTCH INVERT EL.=17.82
SUMP=12.30
INV IN (N)= 14.30 (18"RCP)
INV OUT (S)=14.80 (23"x14" ERCP)

CS-B1
STA 221+21.42 (-710.21 L)
CONST. FDOT Index No. 425-052
Inlet Type "E" (Modified)
GRATE=21.07
TOP OF WALL (WEIR) EL.=20.57
RECT. NOTCH 0.25'H X 0.80'W
RECT. NOTCH INVERT EL.=17.82
SUMP=12.30
INV IN (N)= 14.30 (18"RCP)
INV OUT (S)=17.55 (23"x14" ERCP)

CS-C1
STA 254+82.75 (-724.64 L)
CONST. FDOT Index No. 425-052
Inlet Type "E" (Modified)
GRATE=20.57
TOP OF WALL (WEIR) EL.=19.57
RECT. NOTCH 0.42'H X 1.25'W
RECT. NOTCH INVERT EL.=18.32
SUMP=12.30
INV IN (E)= 14.30 (18"RCP)
INV OUT (W)=17.75 (23"x14" ERCP)

NOTES:

1.) ALL EXISTING AND PROPOSED GRADES SHOWN REFER TO N.A.V.D. 1988. TO CONVERT TO N.G.V.D.1929 ADD 1.18 FT.

2.) STATIONING BASED ON CL OF CONSTRUCTION.

3.) OFFSET FOR DRAINAGE STRUCTURES ARE LOCATED AS FOLLOWS:
FOR TYPE 'P' CURB INLETS - ALONG THE CENTER LINE OF THE CURB INLET AT THE CENTER OF STRUCTURE,
FOR TYPE 'J' CURB INLETS - ALONG THE CENTER LINE OF THE CURB INLET AT THE EDGE OF PAVEMENT,
FOR DITCH BOTTOM INLETS - AT THE CENTER OF THE INLET,
FOR MANHOLES - AT THE CENTER OF THE MANHOLE RIM,
FOR MITERED END SECTIONS - AT THE LOC. REF. POINT AS SHOWN ON F.D.O.T. INDEX NO. 430-021,
FOR ENDWALLS - AT THE STANDARD LOCATION CONTROL AS SHOWN ON F.D.O.T. INDEX NO. 430-030.

P:\CAD\2017\17-372\3-Oaks-Ph1\PLOT_PHASE1\DRAINAGE STRUCTURE DATA.dwg, 11 DRAINAGE STRUCTURE DATA, 4/29/2019 3:34:56 PM, Avalon Engineering Inc.

DATE	BY	REVISION DESCRIPTION

60% PLANS

AVALON PROJECT: 17-372
PROJ. MGR. Jack Schrager, PE, VP
LEE COUNTY DOT PROJECT: CN160642/ANB
LDOT PROJ. MGR. VINCENT MILLER

AVALON ENGINEERING, INC.
2503 DEL PRADO BLVD. SUITE 200
CAPE CORAL, FLORIDA 33904
FBPE#3128 (239) 573-2077

LEE COUNTY DEPARTMENT OF TRANSPORTATION
(239) 533-8580

THREE OAKS PARKWAY EXTENSION
PHASE 1: FIDDLESTICKS CANAL TO STA 265+20
LEE COUNTY, FLORIDA

DRAINAGE STRUCTURE DATA
THREE OAKS PKWY EXT.

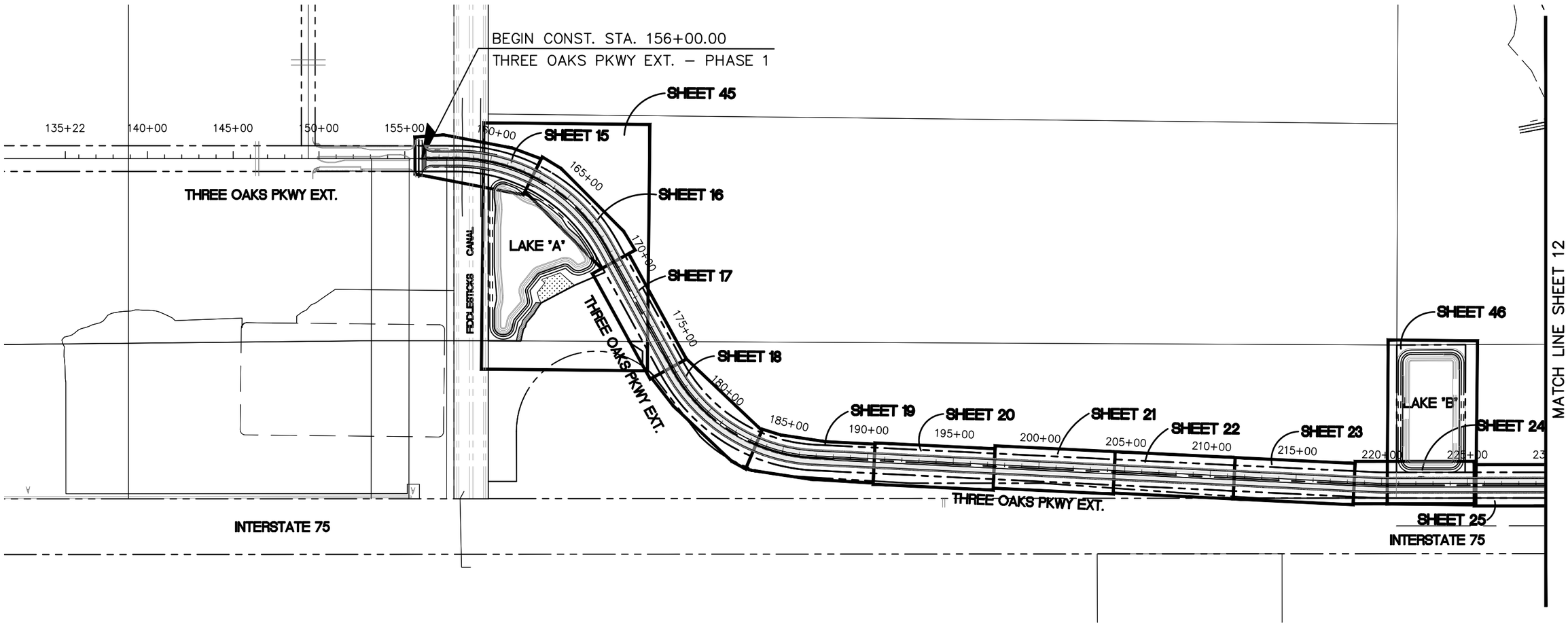

P:\CAD\2017\17-372\3-Oaks-Ph1\PLOT_PHASE1\KEY-SHEET_PHASE1.dwg, 12 PROJECT LAYOUT, 4/29/2019 3:35:04 PM, Avalon Engineering Inc.

DATE	BY	REVISION DESCRIPTION

60% PLANS

AVALON PROJECT: 17-372
PROJ. MGR. Jack Schrager, PE, VP
LEE COUNTY DOT PROJECT: CN160642/ANB
LDOT PROJ. MGR. VINCENT MILLER

AVALON ENGINEERING, INC.
2503 DEL PRADO BLVD. SUITE 200
CAPE CORAL, FLORIDA 33904
FBPE#3128 (239) 573-2077

LEE COUNTY DEPARTMENT OF TRANSPORTATION
(239) 533-8580

THREE OAKS PARKWAY EXTENSION
PHASE 1: FIDDLESTICKS CANAL TO STA 265+20
LEE COUNTY, FLORIDA

PROJECT LAYOUT
THREE OAKS PKWY EXT.

SHEET 12 of 110

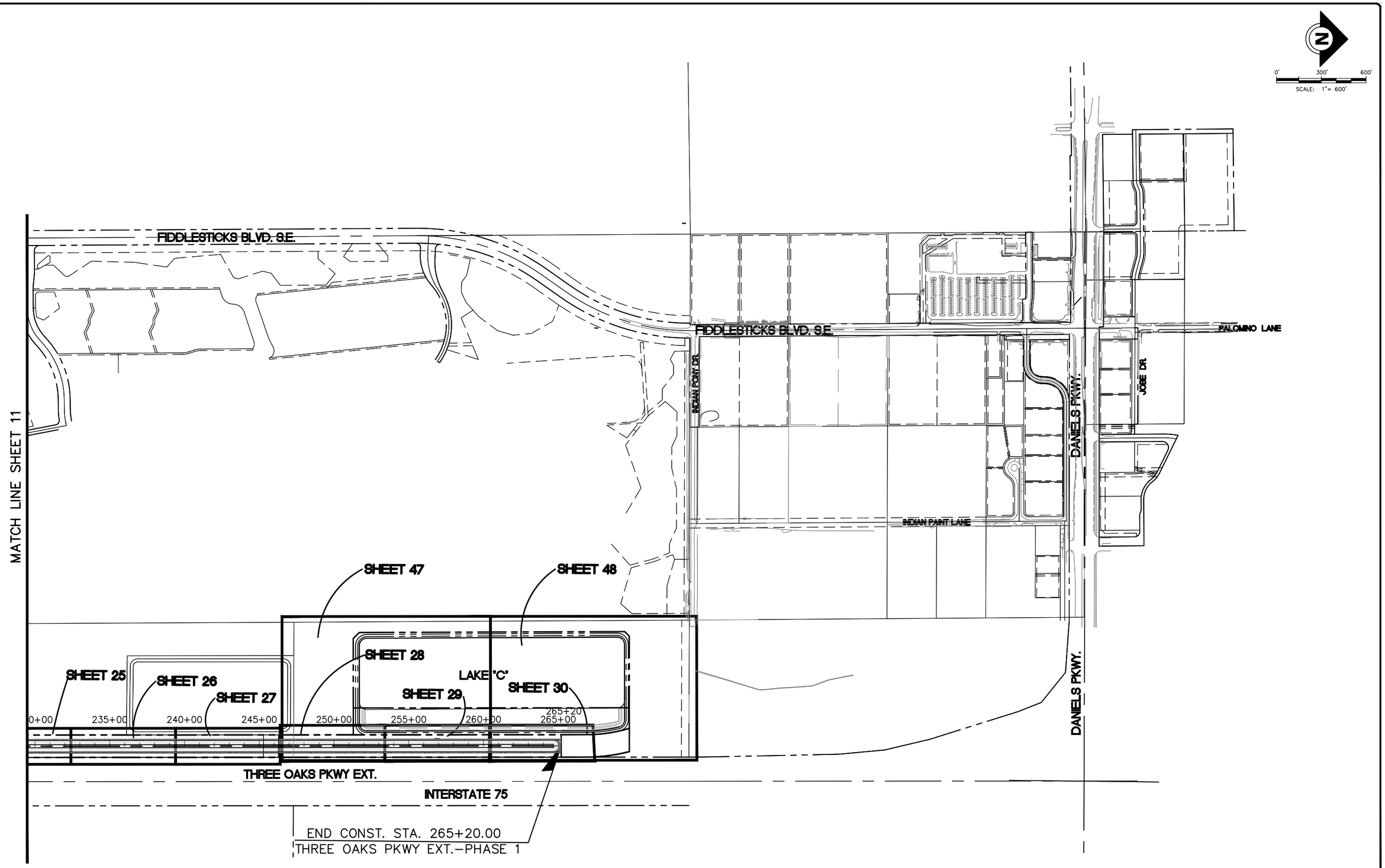

P:\CAD\2017\17-372\3-Oaks-Ph1\PLOT_PHASE1\KEY-SHEET_PHASE1.dwg, 13 PROJECT LAYOUT, 4/29/2019 3:35:06 PM, Avalon Engineering Inc.

DATE	BY	REVISION DESCRIPTION

60% PLANS

AVALON PROJECT: 17-372
PROJ. MGR. Jack Schrager, PE, VP
LEE COUNTY DOT PROJECT: CN160642/ANB
LDOT PROJ. MGR. VINCENT MILLER

AVALON ENGINEERING, INC.
2503 DEL PRADO BLVD, SUITE 200
CAPE CORAL, FLORIDA 33904
FBPE#3128 (239) 573-2077

LEE COUNTY DEPARTMENT OF TRANSPORTATION
(239) 533-8580

THREE OAKS PARKWAY EXTENSION
PHASE 1: FIDDLESTICKS CANAL TO STA 265+20
LEE COUNTY, FLORIDA

PROJECT LAYOUT
THREE OAKS PKWY EXT.

SHEET
13 of 110

GENERAL CONSTRUCTION NOTES

1. UNLESS OTHERWISE NOTED, ALL ELEVATIONS REFER TO MEAN SEA LEVEL, N.A.V.D. 1988. TO CONVERT TO N.G.V.D. 1929 ADD 1.18 FEET.

2. CONTRACTOR SHALL LOCATE AND VERIFY THE SIZE, LOCATION AND DEPTH OF ALL EXISTING UTILITIES IN THE FIELD AND SHALL NOTIFY THE UTILITY COMPANIES IN THE AREA BEFORE BEGINNING CONSTRUCTION. ANY UTILITIES THAT ARE DISTURBED OR DAMAGED BY THE CONTRACTOR SHALL BE IMMEDIATELY REPAIRED OR REPLACED BY THE CONTRACTOR AT THEIR EXPENSE. ANY DISCREPANCY NOT CALLED TO THE ENGINEER'S ATTENTION PRIOR TO ACCOMPLISHMENT OF THE WORK SHALL BE CORRECTED IMMEDIATELY AT THE CONTRACTOR'S EXPENSE.

3. ALL MATERIALS AND WORKMANSHIP UNDER THIS PROJECT SHALL BE IN STRICT ACCORDANCE WITH THE CURRENT CONSTRUCTION STANDARDS AND SPECIFICATIONS OF LEE COUNTY DEVELOPMENT STANDARDS, LEE COUNTY DEPARTMENT OF TRANSPORTATION (LCDOT) AND FLORIDA DEPARTMENT OF TRANSPORTATION (FDOT) STANDARD SPECIFICATIONS FOR ROAD AND BRIDGE CONSTRUCTION 2019–20, UNLESS OTHERWISE NOTED.

4. CONCRETE SIDEWALK: USE CLASS I, 3000 PSI (MININUM) CONCRETE. APPLY A BROOM FINISH AND MAKE VERTICAL SAW CUTS AT 5' ON CENTER AT A DEPTH OF 1/4 OF THE SLAB THICKNESS. PROVIDE PRE–FORMED EXPANSION JOINTS AT 50' ON CENTER.

5. CONCRETE CURB & GUTTER AND STRAIGHT CURB: USE CLASS I, 3000 PSI (MINIMUM) CONCRETE. MAKE VERTICAL SAW CUTS EVERY 10' ON CENTER WITH PRE–MOLDED EXPANSION JOINTS EVERY 50' ON CENTER.

6. CONSTRUCTION OF NEW DRIVEWAYS AND/OR ALLEYS SHALL BE IN STRICT ACCORDANCE WITH THE CONSTRUCTION STANDARDS AND SPECIFICATIONS OF LEE COUNTY DEPARTMENT OF TRANSPORTATION. ALL EXISTING GRADES ALONG RIGHT–OF–WAY SHALL BE VERIFIED BY THE CONTRACTOR PRIOR TO CONSTRUCTION.

7. ALL CONSTRUCTION WITHIN THE COUNTY RIGHT–OF–WAY SHALL BE IN STRICT ACCORDANCE WITH THE CURRENT LEE COUNTY DEPARTMENT OF TRANSPORTATION STANDARDS AND ALL REQUIRED INSPECTIONS PERFORMED AS REQUIRED BY THEM. CONTRACTOR SHALL PROVIDE BOND AND PERMIT FEE AS REQUIRED.

8. PAVEMENT MARKINGS AND SIGNS SHALL BE IN STRICT ACCORDANCE WITH THE "MANUAL ON UNIFORM TRAFFIC CONTROL DEVICES FOR STREETS AND HIGHWAYS" AND FDOT STANDARD INDEX #711–001.

9. ALL PERVIOUS AREAS WITHIN THE PROJECT CONSTRUCTION LIMITS SHALL BE GRASSED, SODDED OR MULCHED; OR IN ACCORDANCE WITH THE APPROVED LANDSCAPE PLAN IF INCLUDED WITH THIS PLAN SET OR PROVIDED SEPARATELY AS PART OF CONTRACT.

10. LOCATIONS, ELEVATIONS, AND DIMENSIONS OF EXISTING UTILITIES, STRUCTURES AND OTHER FEATURES ARE SHOWN ACCORDING TO THE BEST INFORMATION AVAILABLE AT THE TIME OF PREPARATION OF THESE PLANS, BUT DO NOT PURPORT TO BE ABSOLUTELY CORRECT. PRIOR TO CONSTRUCTION, THE CONTRACTOR SHALL VERIFY ALL UTILITIES AND BE FULLY RESPONSIBLE FOR ANY AND ALL DAMAGES WHICH MIGHT BE OCCASIONED BY THE FEATURES AFFECTING THEIR WORK. ANYTHING NOT SHOWN ON THESE DRAWINGS THAT WILL CAUSE A CHANGE TO THE CONSTRUCTION PROJECT SHOULD BE BROUGHT TO THE IMMEDIATE ATTENTION OF THE ENGINEER AND SHALL NOT CONSTITUTE AN EXTRA, UNLESS APPROVED BY THE ENGINEER.

11. CONTRACTOR SHALL VERIFY ALL QUANTITIES SHOWN ON THE PLANS. IF ANY DISCREPANCIES IN QUANTITIES ARE FOUND, THE CONTRACTOR SHALL NOTIFY THE PROJECT ENGINEER AND/OR L.C.D.O.T.

12. ALL REGULATORY AND PERMITTING AGENCIES' REQUIREMENTS SHALL BE COMPLIED WITH.

13. APPROPRIATE TURBIDITY CONTROL DEVICES (E.G. SILT FENCES, SYNTHETIC BAILS) WILL BE UTILIZED DURING ALL PHASES OF INSTALLATION AND GRADING. CONTRACTOR IS RESPONSIBLE FOR SUBMITTING THE NPDES NOTICE OF INTENT, NOTICE OF TERMINATION, AND LEE COUNTY RIGHT OF WAY PERMITS. NOI MUST BE FILED WITH FDEP IN ACCORDANCE WITH DEP DOCUMENT NO. 62–621 AT LEAST 48 HOURS PRIOR TO THE START OF CONSTRUCTION. CONTRACTOR IS RESPONSIBLE FOR DEVELOPING AND MAINTAINING AN EFFECTIVE STORMWATER POLLUTION PREVENTION PLAN.

14. TRAFFIC MUST BE MAINTAINED AT ALL TIMES AS PER LEE COUNTY DEPARTMENT OF TRANSPORTATION (L.C.D.O.T.) AND PER FLORIDA DEPARTMENT OF TRANSPORTATION (F.D.O.T.) STANDARD SPECIFICATIONS FOR ROAD AND BRIDGE CONSTRUCTION, LATEST EDITION.

15. THE CONTRACTOR SHALL VERIFY ALL UTILITIES AND PROVIDE AT LEAST 48 HOURS NOTICE TO THE INDIVIDUAL UTILITY COMPANIES AND L.C.D.O.T. PRIOR TO CONSTRUCTION.

16. THE CONTRACTOR SHALL REPLACE ALL PAVEMENT, CURBS, DRIVEWAYS, SIDEWALKS, FENCES, ETC., WITH THE SAME TYPE OF MATERIAL THAT WAS REMOVED DURING CONSTRUCTION OR AS DIRECTED BY THE ENGINEER. THE CONTRACTOR SHALL RESTORE ALL AREAS AFFECTED BY THE CONSTRUCTION TO ITS ORIGINAL CONDITION, OR BETTER.

17. WITHIN THE L.C.D.O.T. RIGHT–OF–WAY, ALL DISTURBED AREAS SHALL RECEIVE GRASSING (SEEDING) OR SODDING MATERIALS IN ACCORDANCE WITH F.D.O.T. SPECIFICATIONS. THOSE AREAS THAT ARE CLASSIFIED AS DRAINAGE DITCHES SHALL RECEIVE FULL SOLID SOD.

18. THE INFORMATION PROVIDED IN THESE PLANS IS SOLELY TO ASSIST THE CONTRACTOR IN ASSESSING THE NATURE AND EXTENT OF CONDITIONS WHICH MAY BE ENCOUNTERED DURING THE COURSE OF WORK. ALL CONTRACTORS ARE DIRECTED, PRIOR TO BIDDING, TO CONDUCT WHATEVER INVESTIGATIONS THEY MAY DEEM NECESSARY TO ARRIVE AT THEIR OWN CONCLUSION REGARDING THE ACTUAL CONDITIONS THAT WILL BE ENCOUNTERED, AND UPON WHICH THEIR BIDS WILL BE BASED.

19. ALL FRAMES, COVERS, VALVE BOXES, METER BOXES, AND MANHOLES SHALL BE ADJUSTED TO FINISHED GRADE UPON COMPLETION OF PAVING OR RELATED CONSTRUCTION. ALL VALVE PADS SHALL BE POURED IN PLACE. NO PRE–FORMED VALVE PADS ALLOWED.

20. THE CONTRACTOR SHALL REMOVE AND REPLACE ALL UNSUITABLE FILL MATERIAL ENCOUNTERED WITHIN THE ROADWAY. THE DETERMINATION OF UNSUITABILITY AND EXTENT OF REMOVAL MUST BE COORDINATED WITH AND APPROVED BY THE L.C.D.O.T. AND/OR THE ENGINEER. THE REMOVAL AND REPLACEMENT OF UNSUITABLE MATERIAL SHALL BE PAID FOR ON A CUBIC YARD BASIS UNDER PAY ITEM NO. 120–4. WORK UNDER THIS ITEM INCLUDES REPLACING THE EXCAVATED UNSUITABLE MATERIAL WITH SUITABLE MATERIAL COMPACTED AS REQUIRED. UPON EXCAVATION OF ANY UNSUITABLE MATERIAL THE CONTRACTOR SHALL STOCKPILE THE MATERIAL ON–SITE IN SUCH A FASHION THAT A REASONABLE ESTIMATE OF THE TOTAL REMOVED VOLUME CAN BE MADE. EXCAVATED UNSUITABLE MATERIAL MAY BE PLACED IN SELECTED LOCATIONS ALONG THE ROADWAY SIDE SLOPES WITH APPROVAL FROM THE L.C.D.OT. AND/OR ENGINEER. (SEE NOTE 28. FOR MEDIAN BACKFILL FILL)

21. WATER TABLE SHOWN ON CROSS SECTIONS MAY DIFFER FROM SHWT.

22. OFFSET FOR DRAINAGE STRUCTURES ARE LOCATED AS FOLLOWS:
FOR TYPE 'P' CURB INLETS – ALONG THE CENTER LINE OF THE CURB INLET AT THE CENTER OF STRUCTURE,
FOR TYPE 'J' CURB INLETS – ALONG THE CENTER LINE OF THE CURB INLET AT THE EDGE OF PAVEMENT,
FOR DITCH BOTTOM INLETS – AT THE CENTER OF THE INLET,
FOR MANHOLES – AT THE CENTER OF THE MANHOLE RIM,
FOR MITERED END SECTIONS – AT THE LOC. REF. POINT AS SHOWN ON F.D.O.T. INDEX NO. 430–021,
FOR ENDWALLS – AT THE STANDARD LOCATION CONTROL AS SHOWN ON F.D.O.T. INDEX NO. 430–030.

23. COST OF FILTER FABRIC TO BE INCLUDED IN THE COST OF THE BOX CULVERT.

24. THERE WILL BE NO ADDITIONAL PAYMENT IF ROCK IS ENCOUNTERED. IT IS CONSIDERED INCIDENTAL TO THE ACTIVITY BEING PERFORMED.

25. COST OF SODDING TO INCLUDE FERTILIZER AND WATER NECESSARY TO SUSTAIN SOD THROUGHOUT CONSTRUCTION. COST OF SODDING TO ALSO INCLUDE REGULAR MOWING AT REASONABLE INTERVALS AS DETERMINED BY LEE COUNTY.

26. CONTRACTOR IS REQUIRED TO SUBMIT MAINTENANCE OF TRAFFIC (M.O.T.) PLANS FOR REVIEW AND APPROVAL BY LEE COUNTY D.O.T. PRIOR TO CONSTRUCTION. M.O.T. PLANS SHALL BE IN ACCORDANCE WITH THE LATEST VERSION OF FDOT DESIGN STANDARDS.

27. COST OF FILTER FABRIC TO BE INCLUDED IN THE COST OF RIPRAP.

28. MEDIAN BACKFILL (TOP 6" OF SOIL) SHALL BE LIGHTLY COMPACTED, FERTILE, FRIABLE, NATIVE SOIL WITHOUT MIXTURE OF SUBSOIL MATERIALS. ALL MATERIAL SHALL BE SCREENED AND FREE FROM HEAVY CLAY, STONES, LIME, LUMPS, PLANTS, ROOTS, OR OTHER FOREIGN MATERIALS, NOXIOUS GRASSES OR WEEDS. IT SHALL NOT CONTAIN TOXIC SUBSTANCES WHICH MAY BE HARMFUL TO PLANT GROWTH. MEDIAN BACKFILL (TOP 6" OF SOIL) SHALL BE PAID PER SQUARE YARD OF FINISH SOIL LAYER (MEDIAN GRASSING OPERATION) UNDER PAY ITEM NO. 162–1–AB.

UTILITY INFORMATION:

TELEPHONE:	CENTURY LINK 2820 CARGO STREET FORT MYERS, FL 33916 (239) 332–0841
REFUSE:	WASTE PRO 13110 RICKENBACKER PARKWAY FORT MYERS, FL 33913 (239) 337–0800
WATER/SEWER:	LEE COUNTY UTILITIES 1500 MONROE STREET FORT MYERS, FL 33901 (239) 533–8160
CABLE:	COMCAST 26100 BONITA GRANDE DRIVE BONITA SPRINGS, FL 34135 (855) 616–9200
ELECTRIC:	FLORIDA POWER AND LIGHT 15834 WINKLER ROAD FORT MYERS, FL 33908 (239) 267–0974
FIRE DISTRICT:	SAN CARLOS PARK FIRE PROTECTION & RESCUE SERVICE DISTRICT 19591 BEN HILL GRIFFIN PARKWAY FORT MYERS, FL 33913 (239) 267–7525

LEGEND

————	PROPOSED FORCE MAIN
	PROPOSED FIRE HYDRANT ASSEMBLY W\PIPE BOLLARDS (TYP)
	PROPOSED WATER MAIN & G.V.
	PROPOSED SANITARY SEWER MAIN (SDR 26 PVC) W\MANHOLE
	PROPOSED 6" SEWER LATERAL W\CLEAN–OUT
	PROPOSED LAKE
	ROCK BOULDER RIP–RAP OVER FILTER FABRIC
	EXIST. STORM DRAIN & INLET
S–XX	STRUCTURE I.D.
	PROP. STORM DRAIN & INLET
6.50	MATCH EXISTING GRADE POINT
6.50	PROPOSED CONTOUR ELEVATION
6.50	PROPOSED ELEVATION (NAVD)
x 4.50	EXISTING ELEVATION (NAVD)
	DRAINAGE FLOW ARROW
CR–23	FDOT (INDEX #522–002) SIDEWALK CURB RAMP W/I.D. TYPE AND DETECTABLE WARNING
Benchmark # Set Nail & Disk "LB 2632" in Telephone Pole Elev. = 00.00' (NAVD 88)	BENCHMARK NUMBER, DESCRIPTION, ELEVATION, AND LOCATION.
AB–XXX	SOIL BORING NUMBER & LOCATION

NOTE: SEE UNIVERSAL ENGINEERING SCIENCES' GEOTECHNICAL REPORT FOR BORING LOGS AND ADDITIONAL GEOTECHNICAL INFORMATION

ABREVIATIONS

ABD.	ABANDONED
AC.	ACRE
AH	AHEAD
ALT.	ALTERNATE
AL.	ALUMINUM
ANSI	AMERICAN NATIONAL STANDARDS INSTITUTE
AOR	AXIS OF ROTATION
ARV	AIR RELEASE VALVE
ASPH.	ASPHALT
ASSEM.	ASSEMBLY
ASTM	AMERICAN SOCIETY FOR TESTING MATERIALS
AWWA	AMERICAN WATER WORKS ASSOCIATION
AVE	AVENUE
BK	BACK
BLVD.	BOULEVARD
BM	BENCH MARK
BOT.	BOTTOM
BO	BLOW OFF
BTFLY.	BUTTERFLY
CAP	CORRUGATED ALUMINUM PIPE
CATV	CABLE TELEVISION
CB	CATCH BASIN
C & G	CURB AND GUTTER
C/C	CENTER TO CENTER
CF	CUBIC FOOT
CL	CENTER LINE
CMP	CORRUGATED METAL PIPE
CO	CLEAN OUT
COR.	CORNER
CONC.	CONCRETE
CORP.	CORPORATION
CT	COURT
DIA.	DIAMETER
DIM.	DIMENSION
DRWY	DRIVEWAY
DWG.	DRAWING
DIP	DUCTILE IRON PIPE
E	EAST
EW	EACH WAY
EOP	EDGE OF PAVEMENT
EL.	ELEVATION
ELEC.	ELECTRICAL
ELEV.	ELEVATION
ESMT	EASEMENT
ERCP	ELLIPTICAL REINFORCED CONCRETE PIPE
EX.	EXISTING
EXIST.	EXISTING
EXIST. PGL	EXISTING PROFILE GRADE LINE
FAC	FLORIDA ADMINISTRATIVE CODE
FDOT	FLORIDA DEPARTMENT OF TRANSPORTATION
FH	FIRE HYDRANT
FL	FLOW LINE
FO	FIBER OPTIC
FOC	FIBER OPTIC CABLE
FLG.	FLANGED
FT	FOOT
FM	FORCE MAIN
GALV.	GALVANIZED
GAL.	GALLON
GM	GAS MAIN
IN.	INCH
INC.	INCORPORATED
INV	INVERT
IRR.	IRRIGATION LINE
JB	JUNCTION BOX
LB.	POUND
LBR	LIMEROCK BEARING RATIO
LCDOT	LEE COUNTY DEPARTMENT OF TRANSPORTATION
LCU	LEE COUNTY UTILITIES
LF	LINEAR FOOT
LN	LANE
LT	LEFT
MAX.	MAXIMUM
MH	MANHOLE
MIN.	MINIMUM
MISC.	MISCELLANEOUS
MJ	MECHANICAL JOINT
MV	MEDIUM VOLTAGE
MOT	MAINTENANCE OF TRAFFIC
MOD.	MODIFIED
N	NORTH
NO.	NUMBER
NGVD	NATIONAL GEODETIC VERTICAL DATUM
NPT	NATIONAL PIPE THREAD
NE	NORTHEAST
NLY.	NORTHERLY
NW	NORTHWEST
OC	ON CENTERS
O/E	OR EQUAL
O/O	OUTSIDE TO OUTSIDE
PKWY	PARKWAY
PAVT.	PAVEMENT
PEN.	PENETRATION
PI	POINT OF INTERSECTION
PL	PLACE
PRM	PERMANENT REFERENCE MONUMENT
PT	POINT OF TANGENCY
PROP. PGL	PROPOSED PROFILE GRADE LINE
PS	PUMP STATION
PSI	POUNDS PER SQUARE INCH
PVC	POLYVINYL CHLORIDE
PW	POTABLE WATER
P/L	PROPERTY LINE
PUE	PUBLIC UTILITY EASEMENT
R.	RADIUS
RCP	REINFORCED CONCRETE PIPE
RDWY.	ROADWAY
RED.	REDUCER
REF.	REFERENCE
REINF.	REINFORCED
RELOC.	RELOCATION
REM.	REMOVAL
REPL.	REPLACE
REQ.	REQUIRED
R/W	RIGHT OF WAY
ROW	RIGHT OF WAY
RT	RIGHT
RW	RIGHT OF WAY
SAN.	SANITARY
SEW.	SEWER
SCH.	SCHEDULE
S	SOUTH
SD	STORM DRAIN
SE	SOUTHEAST
SECT.	SECTION
SHLDR.	SHOULDER
SLY.	SOUTHERLY
SPEC.	SPECIFICATION
SQ. FT.	SQUARE FOOT
SQ. IN.	SQUARE INCH
SS	SANITARY SEWER
STD.	STANDARD
ST.	STREET
STA.	STATION
SW	SOUTHWEST
SWK	SIDEWALK
TEL.	TELEPHONE
TB	TELEPHONE BOX
TER	TERRACE
TYP.	TYPICAL
USF	UNITED STATES FOUNDRY
UTS	UNITED TELEPHONE SERVICE
UTIL.	UTILITIES
VAR.	VARIES
VOL.	VOLUME
WM	WATER MAIN
W	WEST
W/	WITH
XSEC	CROSS SECTION

P:\CAD\2017\17-372\3-Oaks-Ph1\PLOT_PHASE1\KEY-SHEET_PHASE1.dwg, 14 GENERAL NOTES, 4/29/2019 3:35:11 PM, Avalon Engineering Inc.

DATE	BY	REVISION DESCRIPTION

60% PLANS

AVALON PROJECT: 17-372
PROJ. MGR. Jack Schrager, PE, VP
LEE COUNTY DOT PROJECT: CN160642/ANB
LDOT PROJ. MGR. VINCENT MILLER

AVALON ENGINEERING, INC.
2503 DEL PRADO BLVD, SUITE 200
CAPE CORAL, FLORIDA 33904
FBPE#3128 (239) 573-2077

LEE COUNTY DEPARTMENT OF TRANSPORTATION
(239) 533-8580

THREE OAKS PARKWAY EXTENSION
PHASE 1: FIDDLESTICKS CANAL TO STA 265+20
LEE COUNTY, FLORIDA

GENERAL NOTES
THREE OAKS PKWY EXT.

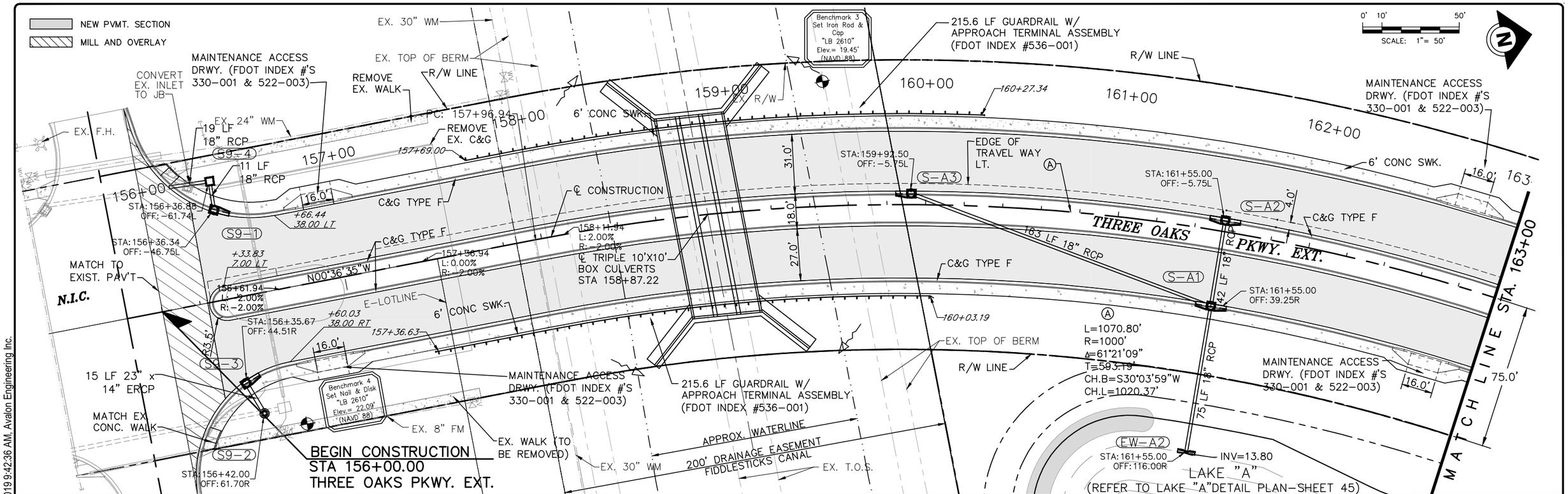

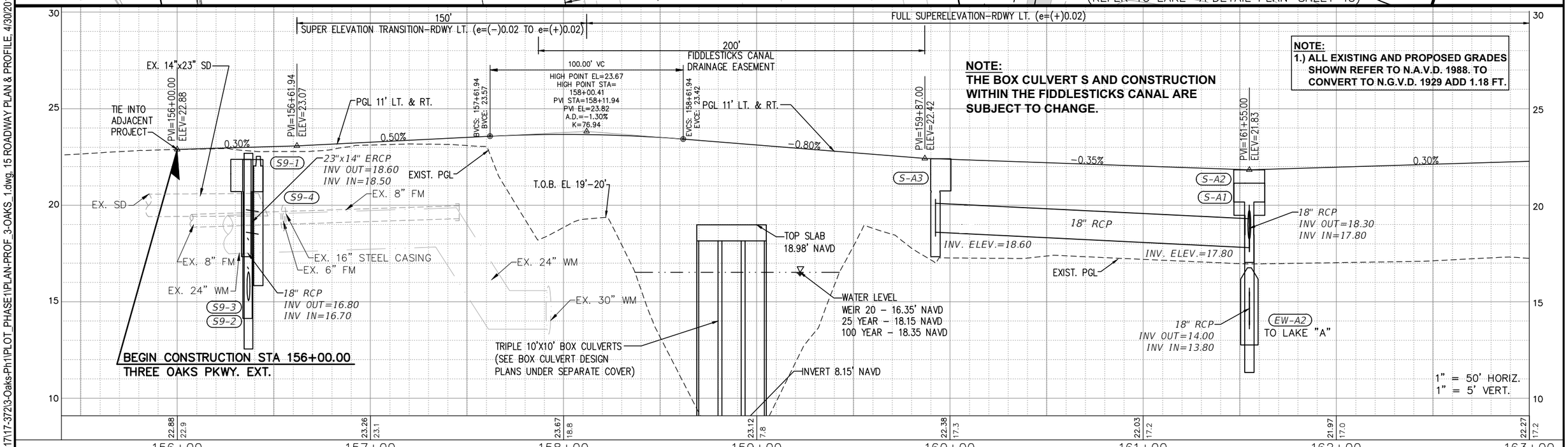

DATE	BY	REVISION DESCRIPTION

60% PLANS

AVALON PROJECT: 17-372
PROJ. MGR. Jack Schrager, PE, VP
LEE COUNTY DOT PROJECT: CN160642/ANB
LDOT PROJ. MGR. VINCENT MILLER

AVALON ENGINEERING, INC.
2503 DEL PRADO BLVD, SUITE 200
CAPE CORAL, FLORIDA 33904
FBPE#3128 (239) 573-2077

LEE COUNTY DEPARTMENT OF TRANSPORTATION
(239) 533-8580

THREE OAKS PARKWAY EXTENSION
PHASE 1: FIDDLESTICKS CANAL TO STA 265+20
LEE COUNTY, FLORIDA

ROADWAY PLAN & PROFILE
STA 156+00 TO 163+00

SHEET 15 of 110

P:\CAD\2017\17-372\3-Oaks-Ph1\PLOT_PHASE1\PLAN-PROF_3-OAKS_1.dwg, 15 ROADWAY PLAN & PROFILE, 4/30/2019 9:42:36 AM, Avalon Engineering Inc.

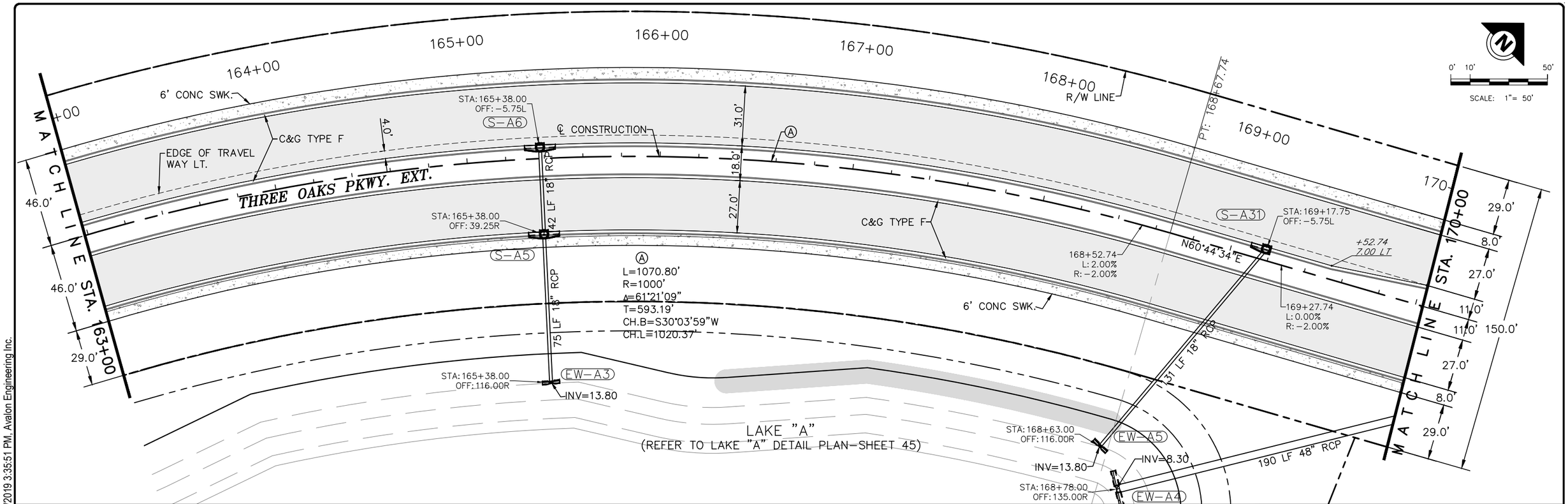

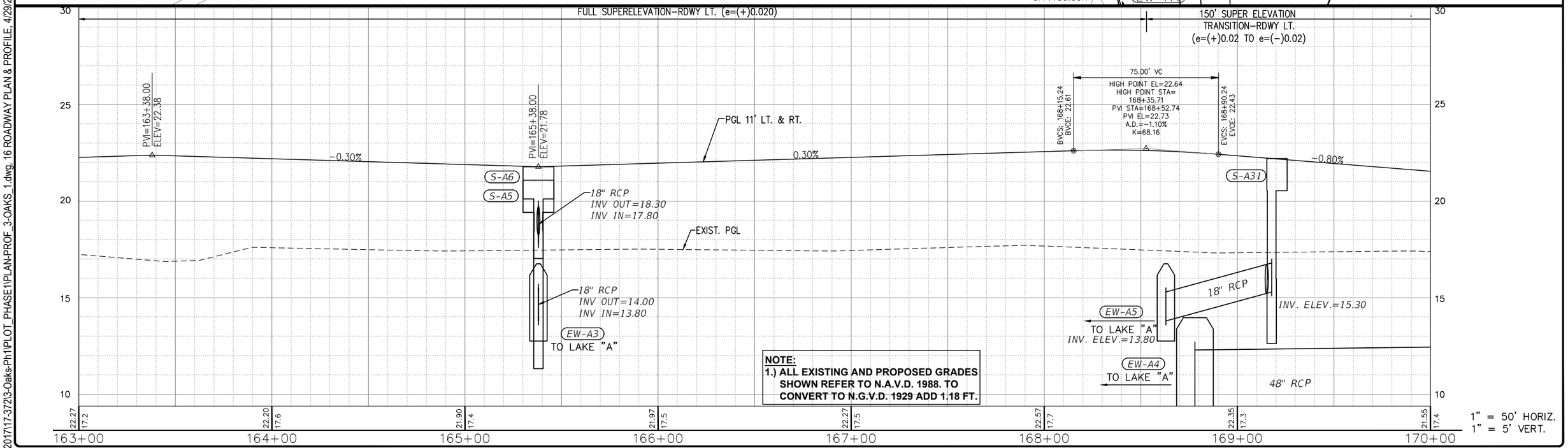

P:\CAD\2017\17-372\3-Oaks-Ph1\PLOT_PHASE1\PLAN-PROF_3-OAKS_1.dwg, 16 ROADWAY PLAN & PROFILE, 4/29/2019 3:35:51 PM, Avalon Engineering Inc.

DATE	BY	REVISION DESCRIPTION

60% PLANS

AVALON PROJECT: 17-372
PROJ. MGR. Jack Schrager, PE, VP
LEE COUNTY DOT PROJECT: CN160642/ANB
LDOT PROJ. MGR. VINCENT MILLER

AVALON ENGINEERING, INC.
2503 DEL PRADO BLVD, SUITE 200
CAPE CORAL, FLORIDA 33904
FBPE#3128 (239) 573-2077

LEE COUNTY DEPARTMENT OF TRANSPORTATION
(239) 533-8580

THREE OAKS PARKWAY EXTENSION
PHASE 1: FIDDLESTICKS CANAL TO STA 265+20
LEE COUNTY, FLORIDA

ROADWAY PLAN & PROFILE
STA 163+00 TO 170+00

SHEET 16 of 110

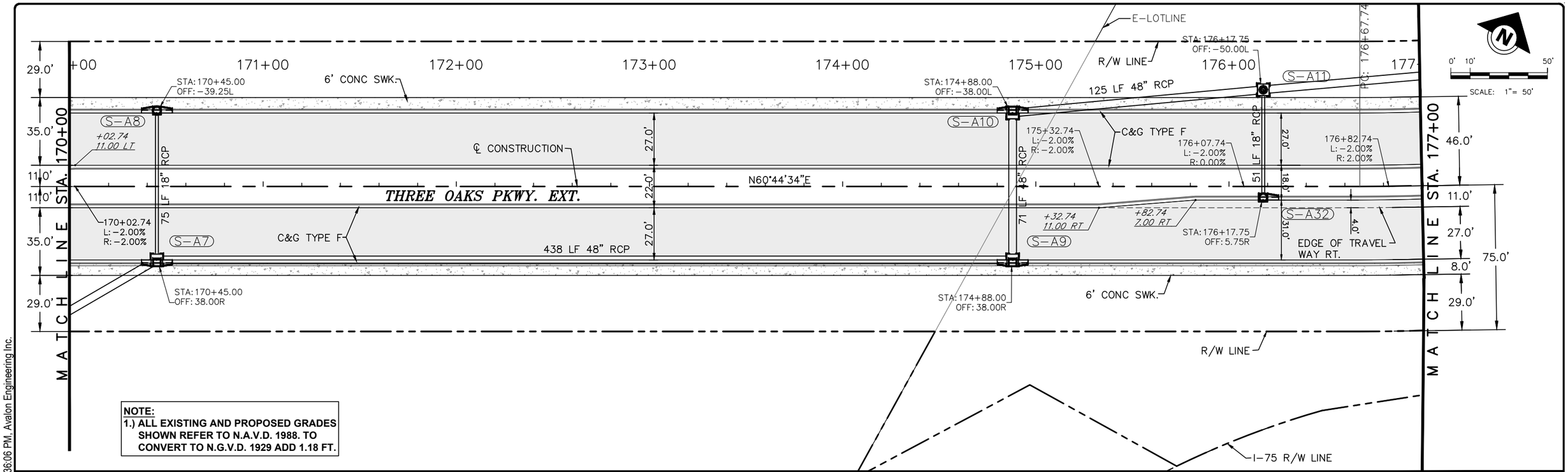

NOTE:
1.) ALL EXISTING AND PROPOSED GRADES SHOWN REFER TO N.A.V.D. 1988. TO CONVERT TO N.G.V.D. 1929 ADD 1.18 FT.

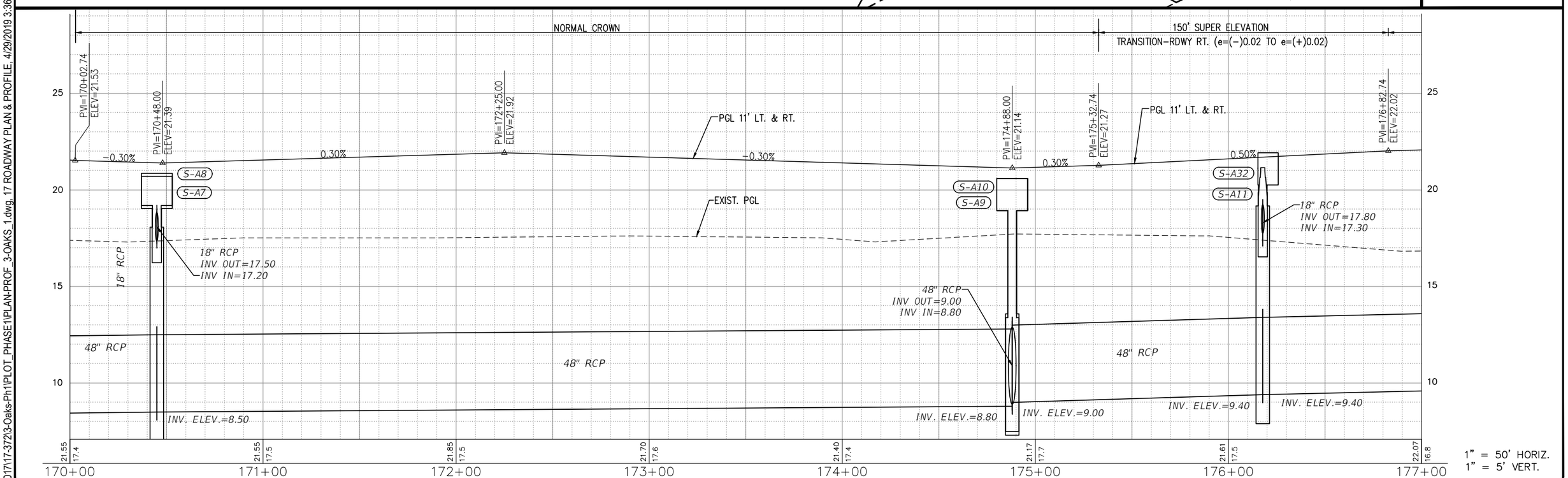

P:\CAD\2017\17-372\3-Oaks-Ph1\PLOT_PHASE1\PLAN-PROF_3-OAKS_1.dwg, 17 ROADWAY PLAN & PROFILE, 4/29/2019 3:36:06 PM, Avalon Engineering Inc.

DATE	BY	REVISION DESCRIPTION

60% PLANS

AVALON PROJECT: 17-372
PROJ. MGR. Jack Schrager, PE, VP
LEE COUNTY DOT PROJECT: CN160642/ANB
LDOT PROJ. MGR. VINCENT MILLER

AVALON ENGINEERING, INC.
2503 DEL PRADO BLVD, SUITE 200
CAPE CORAL, FLORIDA 33904
FBPE#3128 (239) 573-2077

LEE COUNTY DEPARTMENT OF TRANSPORTATION
(239) 533-8580

THREE OAKS PARKWAY EXTENSION
PHASE 1: FIDDLESTICKS CANAL TO STA 265+20
LEE COUNTY, FLORIDA

ROADWAY PLAN & PROFILE
STA 170+00 TO 177+00

SHEET
17 of 110

NOTE:
1.) ALL EXISTING AND PROPOSED GRADES SHOWN REFER TO N.A.V.D. 1988. TO CONVERT TO N.G.V.D. 1929 ADD 1.18 FT.

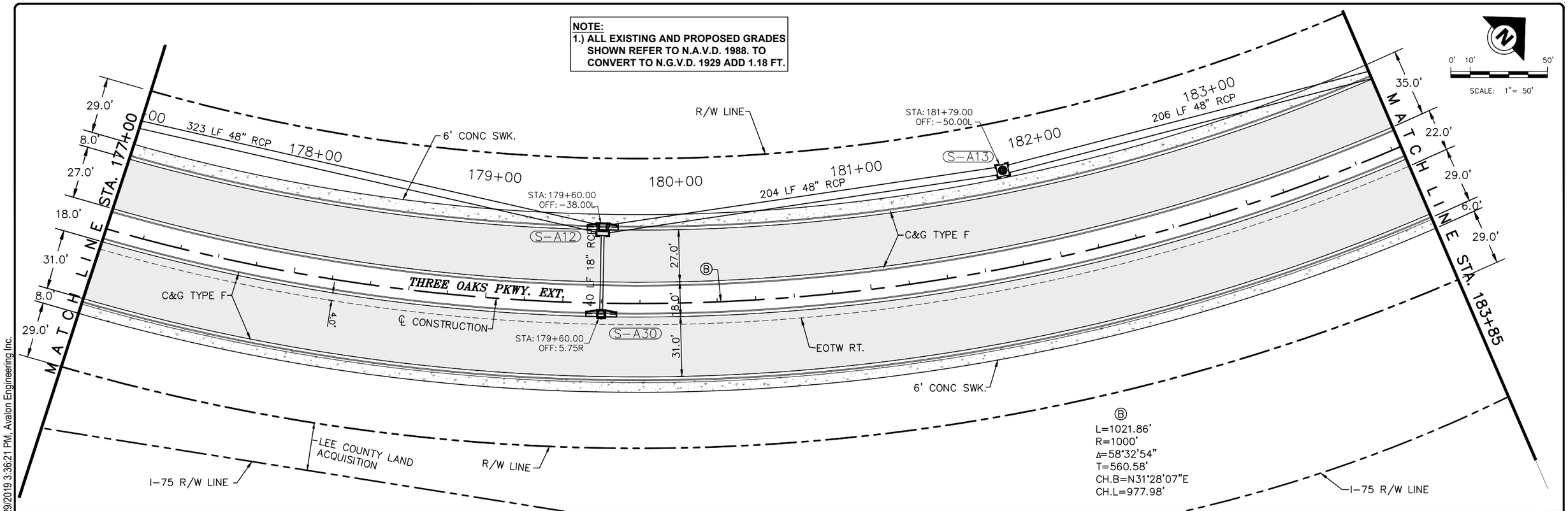

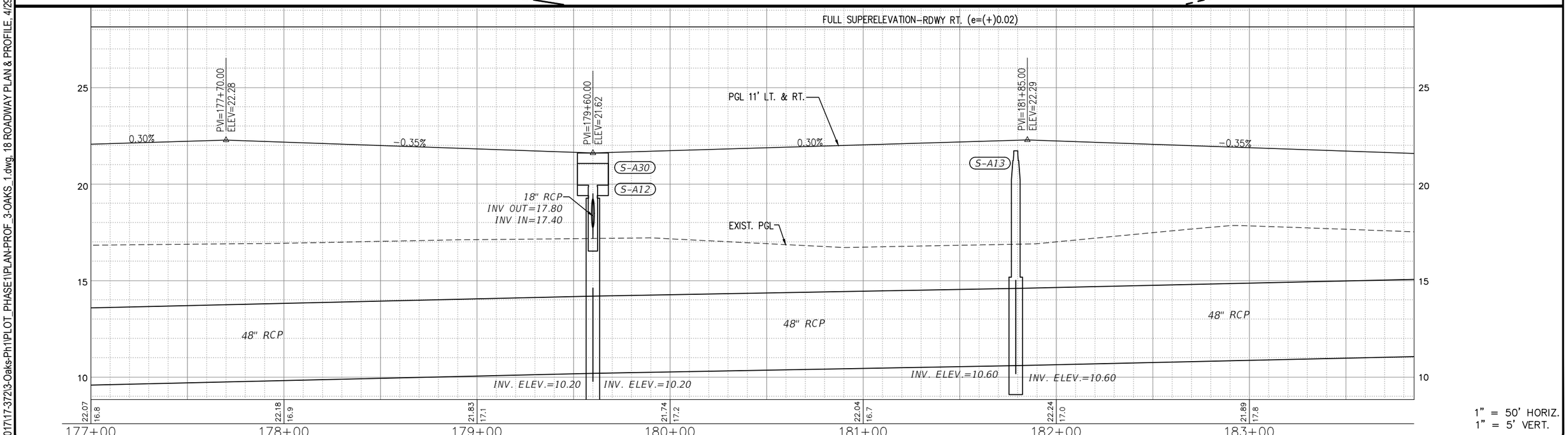

DATE	BY	REVISION DESCRIPTION

60% PLANS

AVALON PROJECT: 17-372
PROJ. MGR. Jack Schrager, PE, VP
LEE COUNTY DOT PROJECT: CN160642/ANB
LDOT PROJ. MGR. VINCENT MILLER

AVALON ENGINEERING, INC.
2503 DEL PRADO BLVD, SUITE 200
CAPE CORAL, FLORIDA 33904
FBPE#3128 (239) 573-2077

LEE COUNTY DEPARTMENT OF TRANSPORTATION
(239) 533-8580

THREE OAKS PARKWAY EXTENSION
PHASE 1: FIDDLESTICKS CANAL TO STA 265+20
LEE COUNTY, FLORIDA

ROADWAY PLAN & PROFILE
STA 177+00 TO 183+85

SHEET 18 of 110

P:\CAD\2017\17-372\3-Oaks-Ph1\PLOT_PHASE1\PLAN-PROF_3-OAKS_1.dwg, 18 ROADWAY PLAN & PROFILE, 4/29/2019 3:36:21 PM, Avalon Engineering Inc.

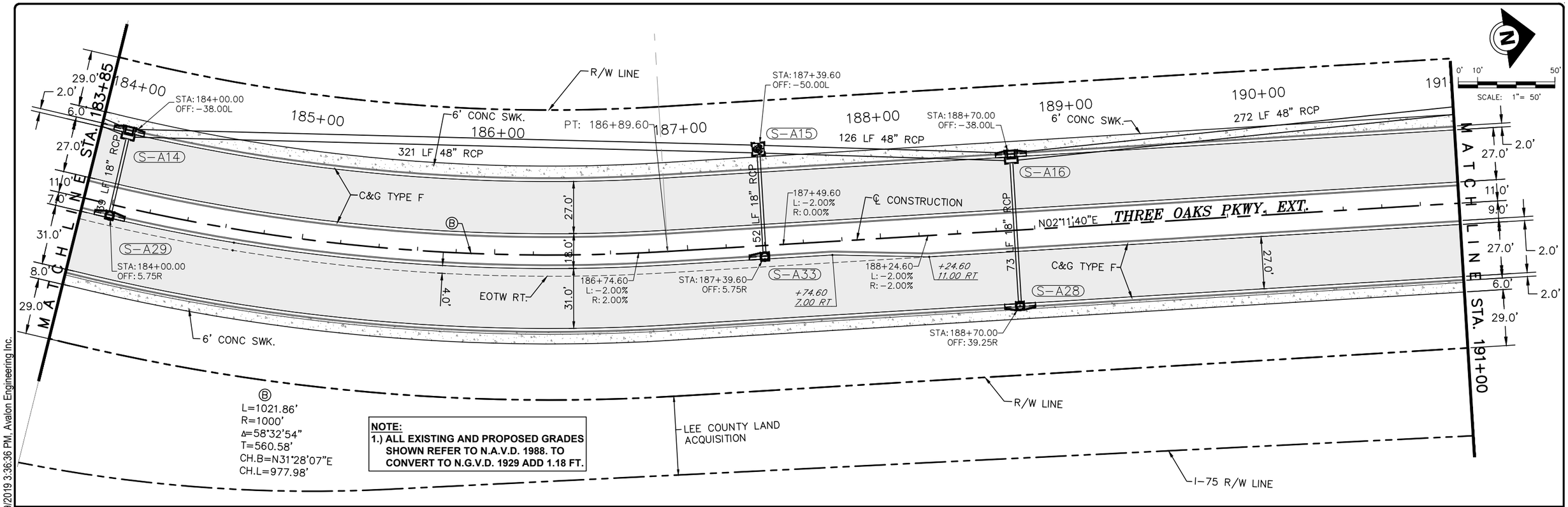

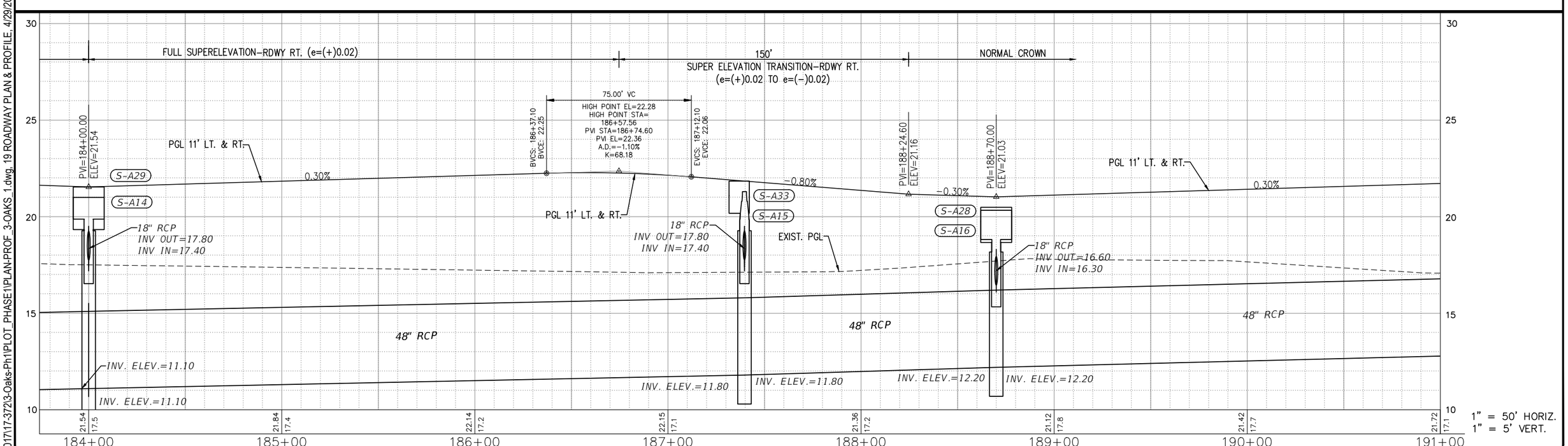

DATE	BY	REVISION DESCRIPTION

60% PLANS

AVALON PROJECT: 17-372
PROJ. MGR. Jack Schrager, PE, VP
LEE COUNTY DOT PROJECT: CN160642/ANB
LDOT PROJ. MGR. VINCENT MILLER

AVALON ENGINEERING, INC.
2503 DEL PRADO BLVD, SUITE 200
CAPE CORAL, FLORIDA 33904
FBPE#3128 (239) 573-2077

LEE COUNTY DEPARTMENT OF TRANSPORTATION
(239) 533-8580

THREE OAKS PARKWAY EXTENSION
PHASE 1: FIDDLESTICKS CANAL TO STA 265+20
LEE COUNTY, FLORIDA

ROADWAY PLAN & PROFILE
STA 183+85 TO 191+00

SHEET 19 of 110

P:\CAD\2017\17-372\3-Oaks-Ph1\PLOT_PHASE1\PLAN-PROF_3-OAKS_1.dwg, 19 ROADWAY PLAN & PROFILE, 4/29/2019 3:36:36 PM, Avalon Engineering Inc.

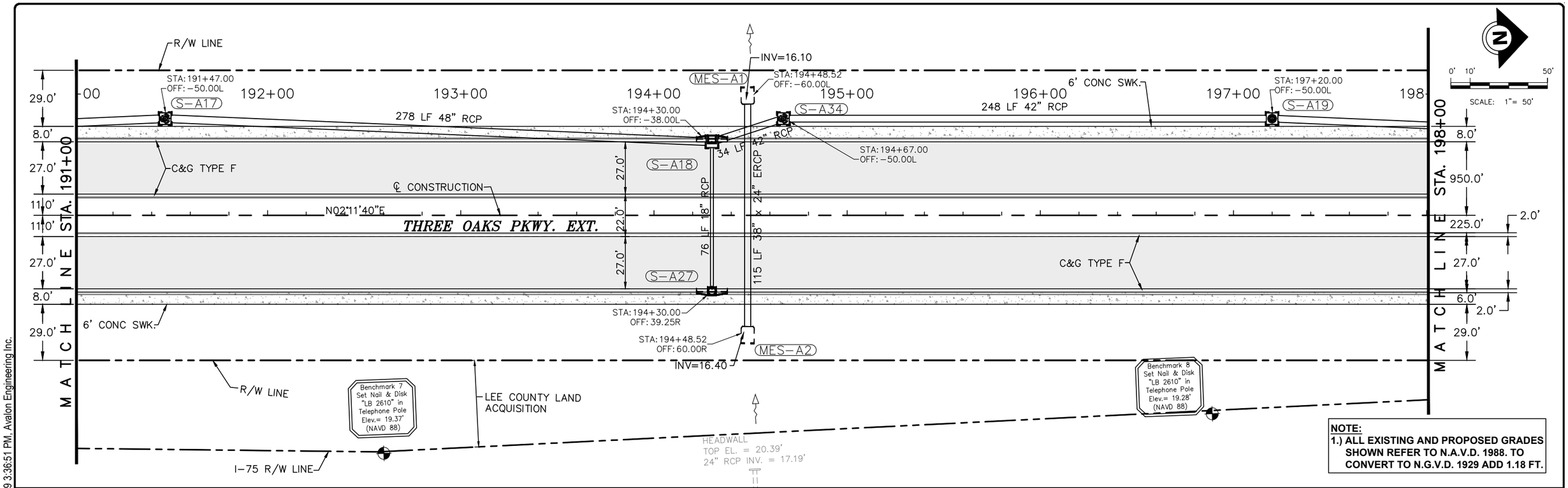

NOTE:
1.) ALL EXISTING AND PROPOSED GRADES SHOWN REFER TO N.A.V.D. 1988. TO CONVERT TO N.G.V.D. 1929 ADD 1.18 FT.

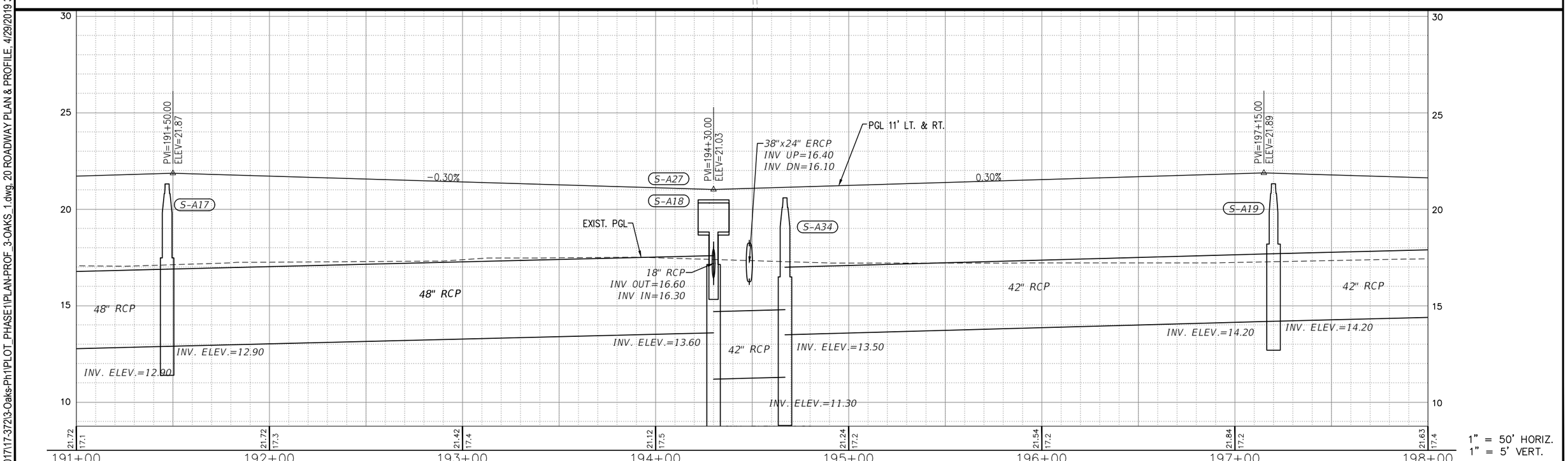

DATE	BY	REVISION DESCRIPTION

60% PLANS

AVALON PROJECT: 17-372
PROJ. MGR. Jack Schrager, PE, VP
LEE COUNTY DOT PROJECT: CN160642/ANB
LDOT PROJ. MGR. VINCENT MILLER

AVALON ENGINEERING, INC.
2503 DEL PRADO BLVD, SUITE 200
CAPE CORAL, FLORIDA 33904
FBPE#3128 (239) 573-2077

LEE COUNTY DEPARTMENT OF TRANSPORTATION
(239) 533-8580

THREE OAKS PARKWAY EXTENSION
PHASE I: FIDDLESTICKS CANAL TO STA 265+20
LEE COUNTY, FLORIDA

ROADWAY PLAN & PROFILE
STA 191+00 TO 198+00

SHEET
20 of 110

P:\CAD\2017\17-372\3-Oaks-Ph1\PLOT_PHASE1\PLAN-PROF_3-OAKS_1.dwg, 20 ROADWAY PLAN & PROFILE, 4/29/2019 3:36:51 PM, Avalon Engineering Inc.

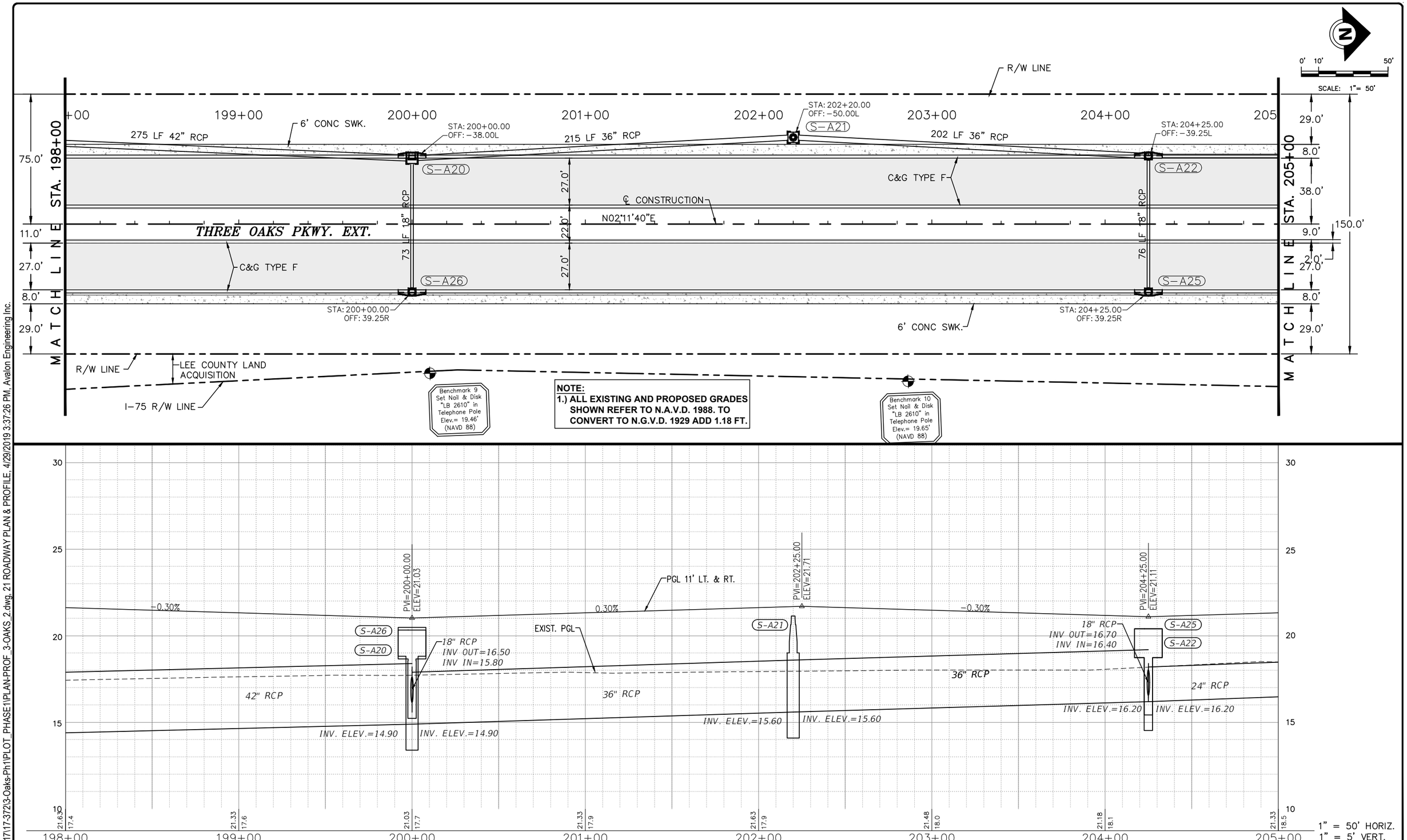

P:\CAD\2017\17-372\3-Oaks-Ph1\PLOT_PHASE1\PLAN-PROF_3-OAKS_2.dwg, 21 ROADWAY PLAN & PROFILE, 4/29/2019 3:37:26 PM, Avalon Engineering Inc.

DATE	BY	REVISION DESCRIPTION

60% PLANS

AVALON PROJECT: 17-372
PROJ. MGR. Jack Schrager, PE, VP
LEE COUNTY DOT PROJECT: CN160642/ANB
LDOT PROJ. MGR. VINCENT MILLER

AVALON ENGINEERING, INC.
2503 DEL PRADO BLVD, SUITE 200
CAPE CORAL, FLORIDA 33904
FBPE#3128 (239) 573-2077

LEE COUNTY DEPARTMENT OF TRANSPORTATION
(239) 533-8580

THREE OAKS PARKWAY EXTENSION
PHASE 1: FIDDLESTICKS CANAL TO STA 265+20
LEE COUNTY, FLORIDA

ROADWAY PLAN & PROFILE
STA 198+00 TO 205+00

SHEET
21 of 110

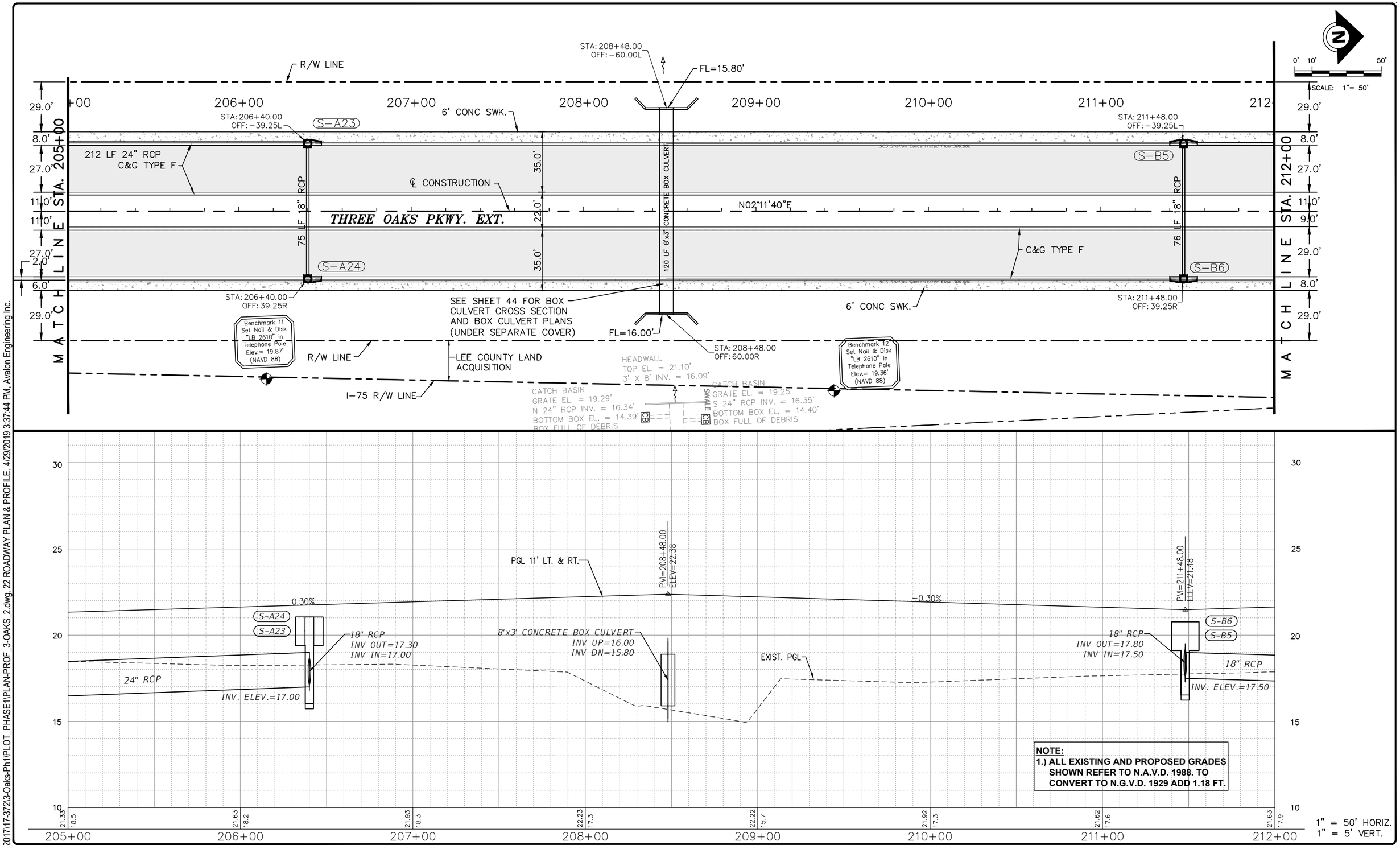

P:\CAD\2017\17-372\3-Oaks-Ph1\PLOT_PHASE1\PLAN-PROF_3-OAKS_2.dwg, 22 ROADWAY PLAN & PROFILE, 4/29/2019 3:37:44 PM, Avalon Engineering Inc.

DATE	BY	REVISION DESCRIPTION

60% PLANS

AVALON PROJECT: 17-372
PROJ. MGR. Jack Schrager, PE, VP
LEE COUNTY DOT PROJECT: CN160642/ANB
LDOT PROJ. MGR. VINCENT MILLER

AVALON ENGINEERING, INC.
2503 DEL PRADO BLVD, SUITE 200
CAPE CORAL, FLORIDA 33904
FBPE#3128 (239) 573-2077

LEE COUNTY DEPARTMENT OF TRANSPORTATION
(239) 533-8580

THREE OAKS PARKWAY EXTENSION
PHASE 1: FIDDLESTICKS CANAL TO STA 265+20
LEE COUNTY, FLORIDA

ROADWAY PLAN & PROFILE
STA 205+00 TO 212+00

SHEET
22 of 110

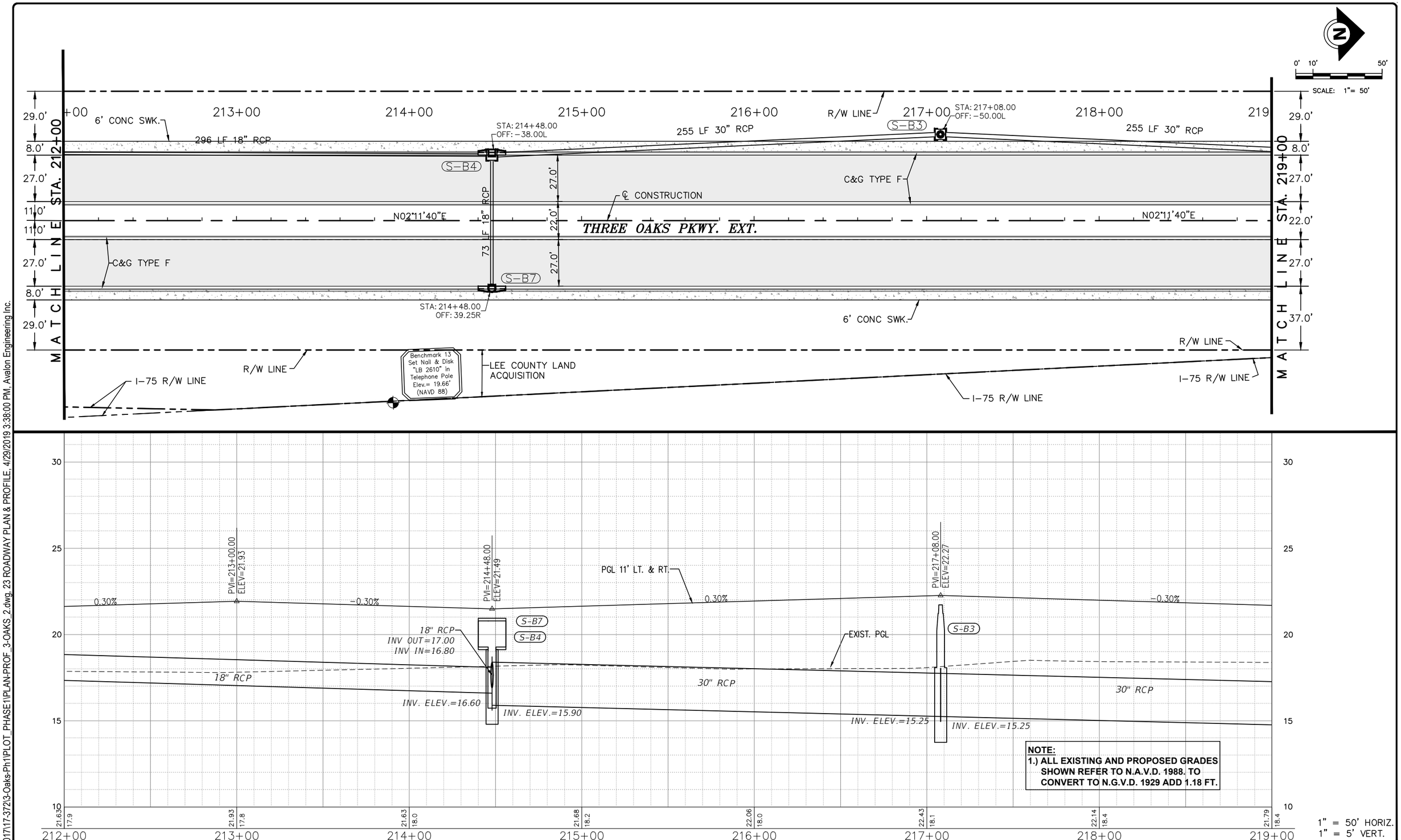

DATE	BY	REVISION DESCRIPTION

60% PLANS

AVALON PROJECT: 17-372
PROJ. MGR. Jack Schrager, PE, VP
LEE COUNTY DOT PROJECT: CN160642/ANB
LDOT PROJ. MGR. VINCENT MILLER

AVALON ENGINEERING, INC.
2503 DEL PRADO BLVD, SUITE 200
CAPE CORAL, FLORIDA 33904
FBPE#3128 (239) 573-2077

LEE COUNTY DEPARTMENT OF TRANSPORTATION
(239) 533-8580

THREE OAKS PARKWAY EXTENSION
PHASE 1: FIDDLESTICKS CANAL TO STA 265+20
LEE COUNTY, FLORIDA

ROADWAY PLAN & PROFILE
STA 212+00 TO 219+00

SHEET 23 of 110

P:\CAD\2017\17-372\3-Oaks-Ph1\PLOT_PHASE1\PLAN-PROF_3-OAKS_2.dwg, 23 ROADWAY PLAN & PROFILE, 4/29/2019 3:38:00 PM, Avalon Engineering Inc.

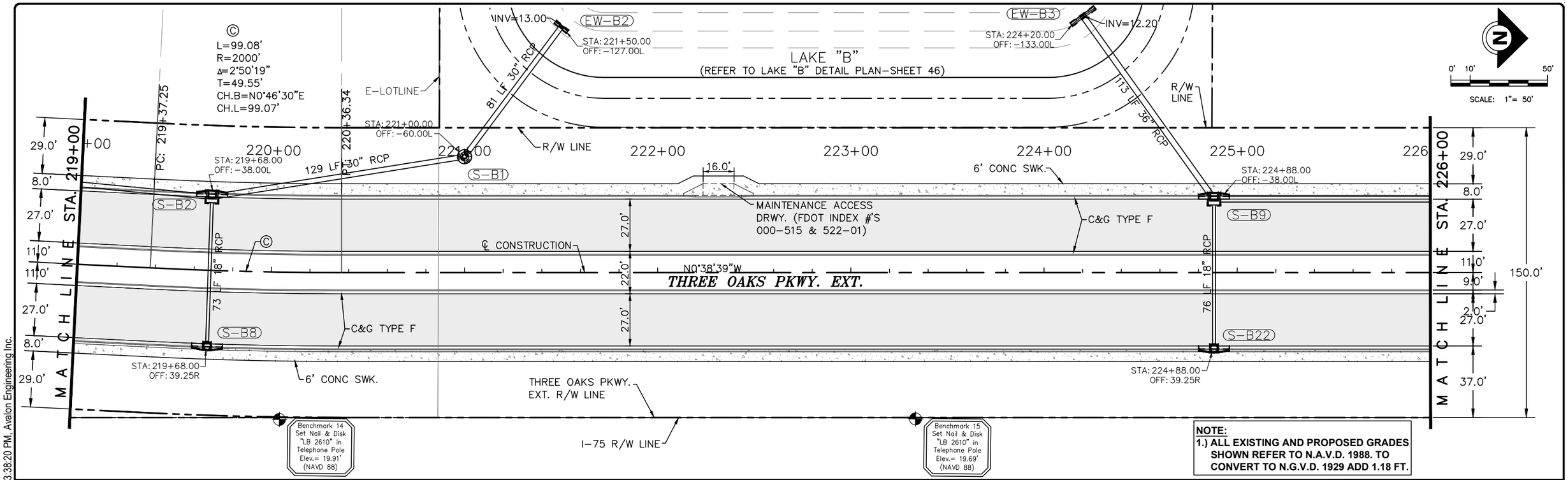

NOTE:
1.) ALL EXISTING AND PROPOSED GRADES SHOWN REFER TO N.A.V.D. 1988. TO CONVERT TO N.G.V.D. 1929 ADD 1.18 FT.

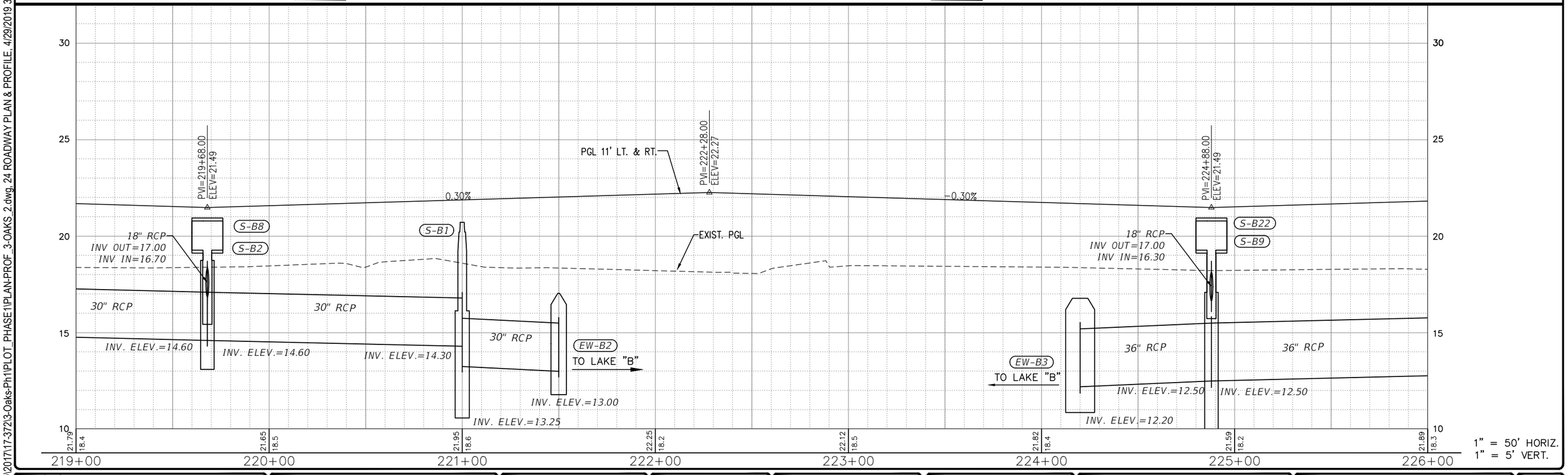

1" = 50' HORIZ.
1" = 5' VERT.

P:\CAD\2017\17-372\3-Oaks-Ph1\PLOT_PHASE1\PLAN-PROF_3-OAKS_2.dwg, 24 ROADWAY PLAN & PROFILE, 4/29/2019 3:38:20 PM, Avalon Engineering Inc.

DATE	BY	REVISION DESCRIPTION

60% PLANS

AVALON PROJECT: 17-372
PROJ. MGR. Jack Schrager, PE, VP
LEE COUNTY DOT PROJECT: CN160642/ANB
LDOT PROJ. MGR. VINCENT MILLER

AVALON ENGINEERING, INC.
2503 DEL PRADO BLVD, SUITE 200
CAPE CORAL, FLORIDA 33904
FBPE#3128 (239) 573-2077

LEE COUNTY DEPARTMENT OF TRANSPORTATION
(239) 533-8580

THREE OAKS PARKWAY EXTENSION
PHASE 1: FIDDLESTICKS CANAL TO STA 265+20
LEE COUNTY, FLORIDA

ROADWAY PLAN & PROFILE
STA 219+000 TO 226+00

SHEET
24 of 110

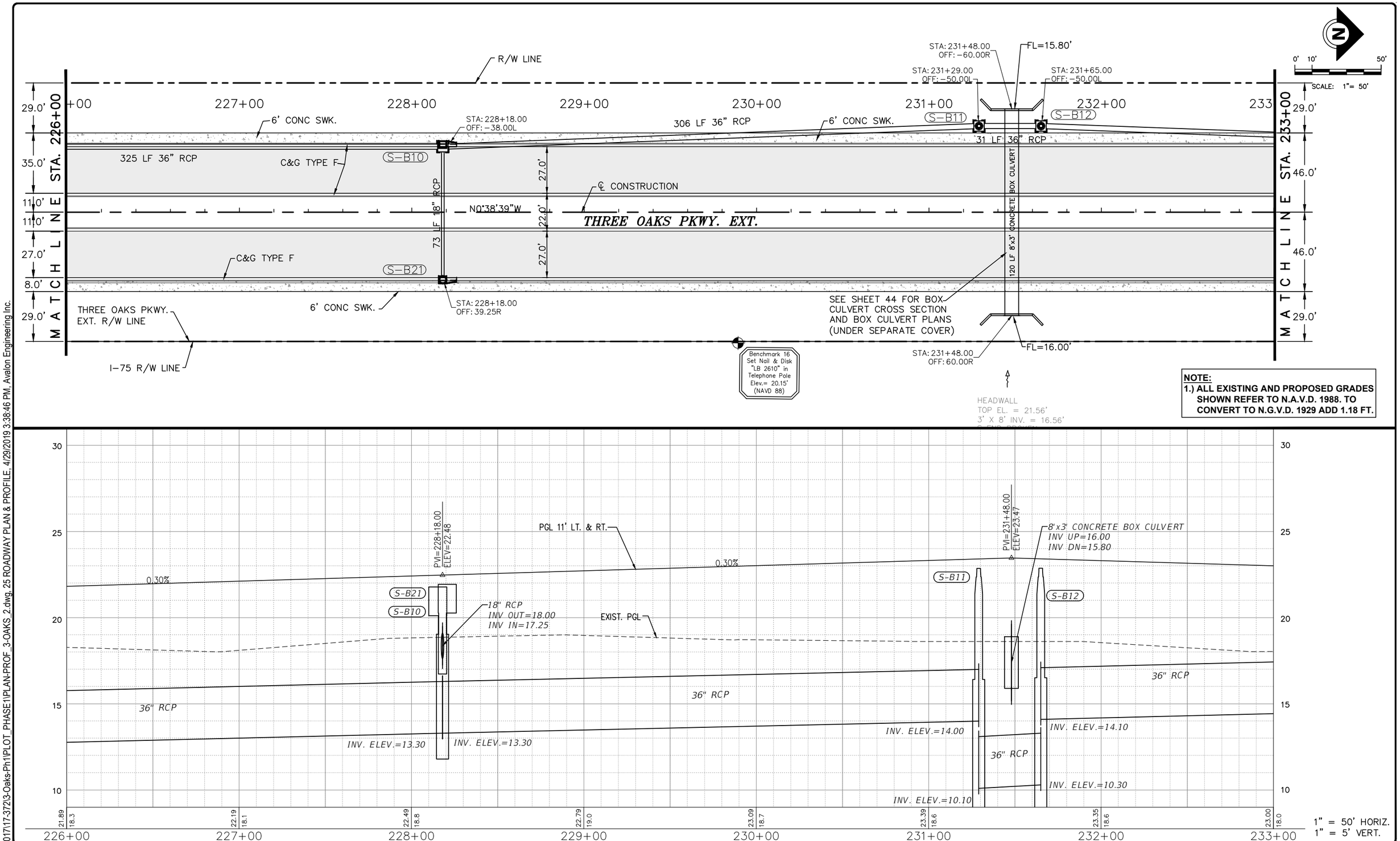

NOTE:
1.) ALL EXISTING AND PROPOSED GRADES SHOWN REFER TO N.A.V.D. 1988. TO CONVERT TO N.G.V.D. 1929 ADD 1.18 FT.

P:\CAD\2017\17-372\3-Oaks-Ph1\PLOT_PHASE1\PLAN-PROF_3-OAKS_2.dwg, 25 ROADWAY PLAN & PROFILE, 4/29/2019 3:38:46 PM, Avalon Engineering Inc.

DATE	BY	REVISION DESCRIPTION

60% PLANS

AVALON PROJECT: 17-372
PROJ. MGR. Jack Schrager, PE, VP
LEE COUNTY DOT PROJECT: CN160642/ANB
LDOT PROJ. MGR. VINCENT MILLER

AVALON ENGINEERING, INC.
2503 DEL PRADO BLVD, SUITE 200
CAPE CORAL, FLORIDA 33904
FBPE#3128 (239) 573-2077

LEE COUNTY DEPARTMENT OF TRANSPORTATION
(239) 533-8580

THREE OAKS PARKWAY EXTENSION
PHASE I: FIDDLESTICKS CANAL TO STA 265+20
LEE COUNTY, FLORIDA

ROADWAY PLAN & PROFILE
STA 226+00 TO 233+00

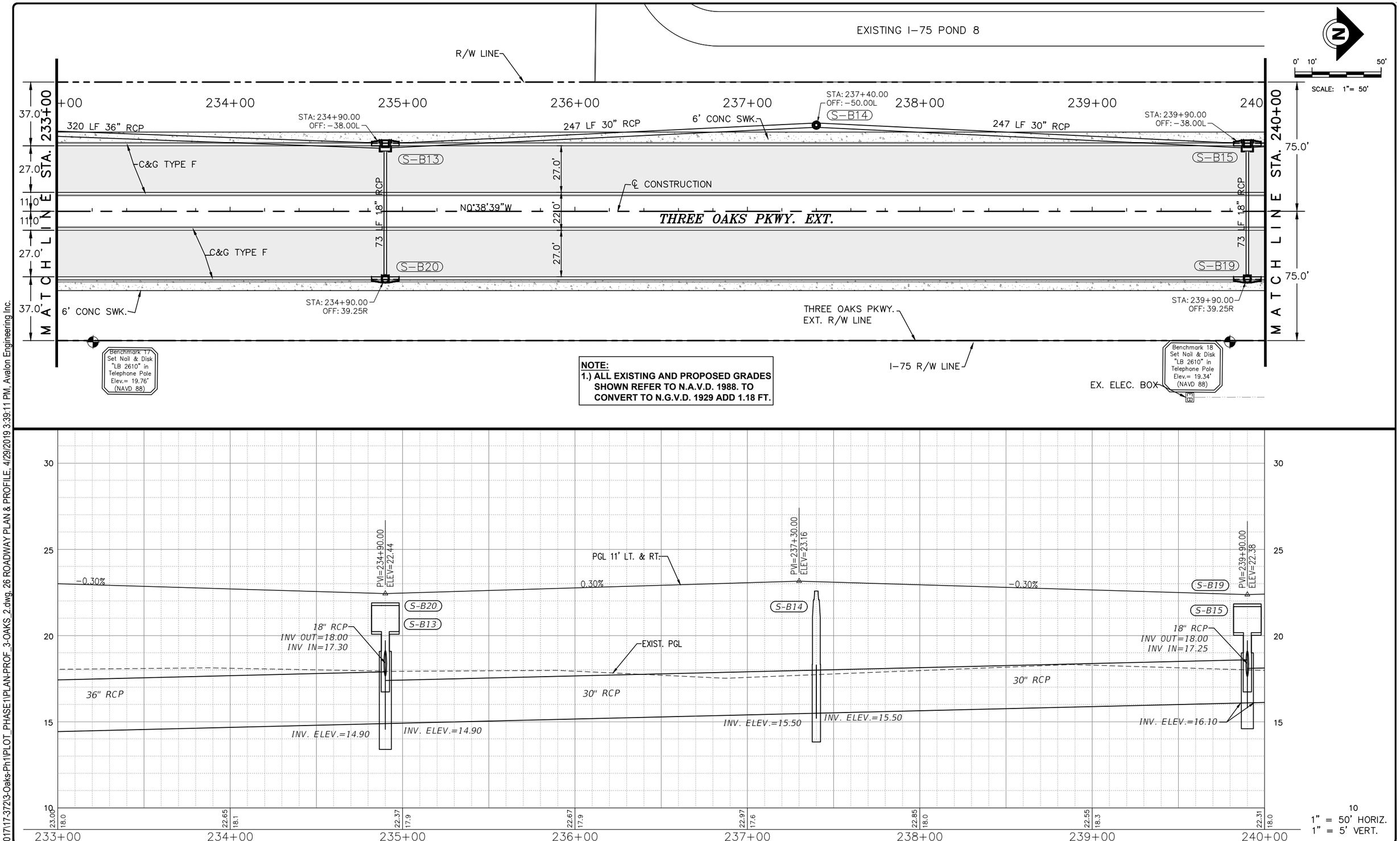

P:\CAD\2017\17-372\3-Oaks-Ph1\PLOT_PHASE1\PLAN-PROF_3-OAKS_2.dwg, 26 ROADWAY PLAN & PROFILE, 4/29/2019 3:39:11 PM, Avalon Engineering Inc.

DATE	BY	REVISION DESCRIPTION

60% PLANS

AVALON PROJECT: 17-372
PROJ. MGR. Jack Schrager, PE, VP
LEE COUNTY DOT PROJECT: CN160642/ANB
LDOT PROJ. MGR. VINCENT MILLER

AVALON ENGINEERING, INC.
2503 DEL PRADO BLVD, SUITE 200
CAPE CORAL, FLORIDA 33904
FBPE#3128 (239) 573-2077

LEE COUNTY DEPARTMENT OF TRANSPORTATION
(239) 533-8580

THREE OAKS PARKWAY EXTENSION
PHASE I: FIDDLESTICKS CANAL TO STA 265+20
LEE COUNTY, FLORIDA

ROADWAY PLAN & PROFILE
STA 233+00 TO 240+00

SHEET
26 of 110

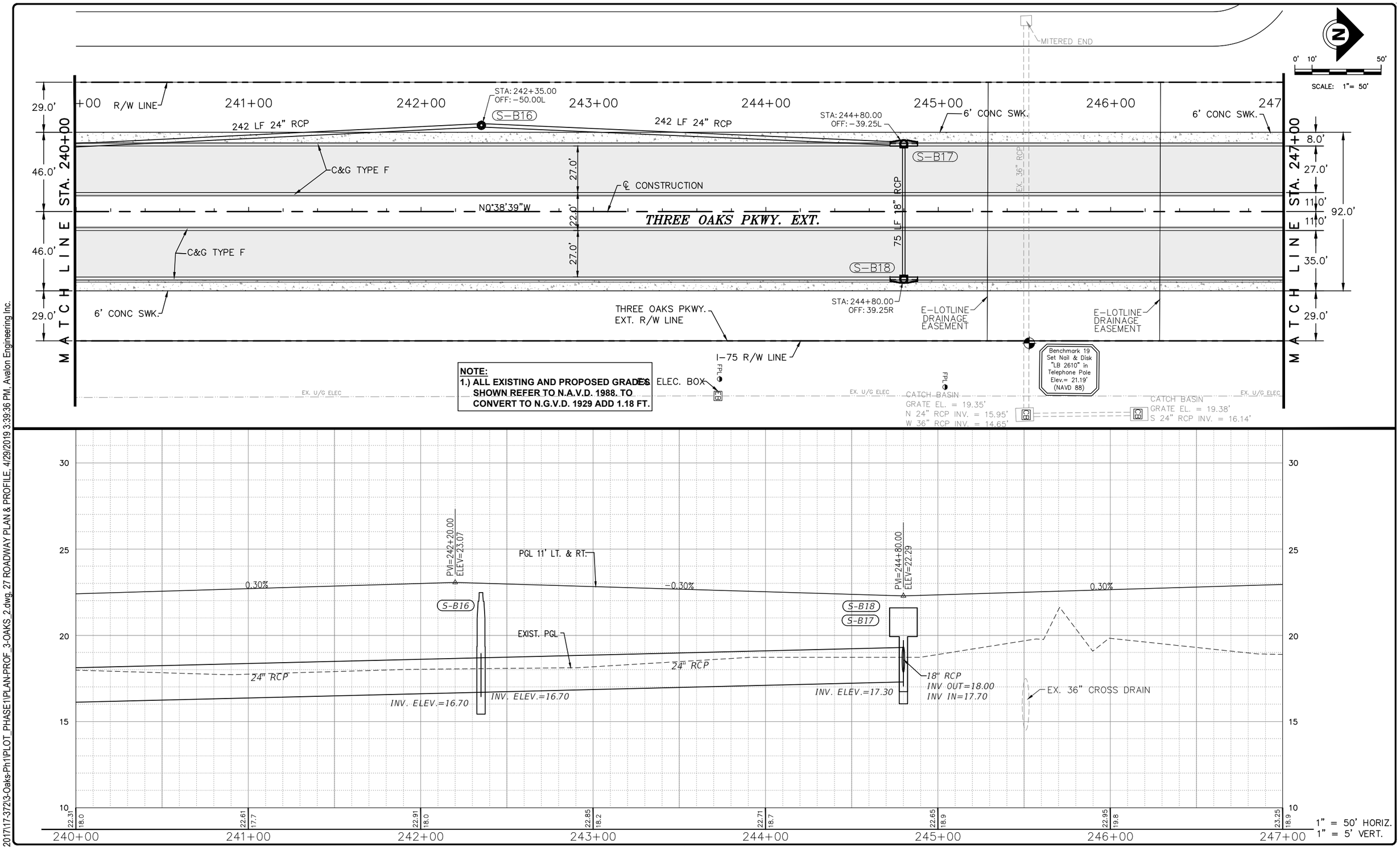

P:\CAD\2017\17-372\3-Oaks-Ph1\PLOT_PHASE1\PLAN-PROF_3-OAKS_2.dwg, 27 ROADWAY PLAN & PROFILE, 4/29/2019 3:39:36 PM, Avalon Engineering Inc.

DATE	BY	REVISION DESCRIPTION

60% PLANS

AVALON PROJECT: 17-372
PROJ. MGR. Jack Schrager, PE, VP
LEE COUNTY DOT PROJECT: CN160642/ANB
LDOT PROJ. MGR. VINCENT MILLER

AVALON ENGINEERING, INC.
2503 DEL PRADO BLVD, SUITE 200
CAPE CORAL, FLORIDA 33904
FBPE#3128 (239) 573-2077

LEE COUNTY DEPARTMENT OF TRANSPORTATION
(239) 533-8580

THREE OAKS PARKWAY EXTENSION
PHASE 1: FIDDLESTICKS CANAL TO STA 265+20
LEE COUNTY, FLORIDA

ROADWAY PLAN & PROFILE
STA 240+00 TO 247+00

SHEET
27 of 110

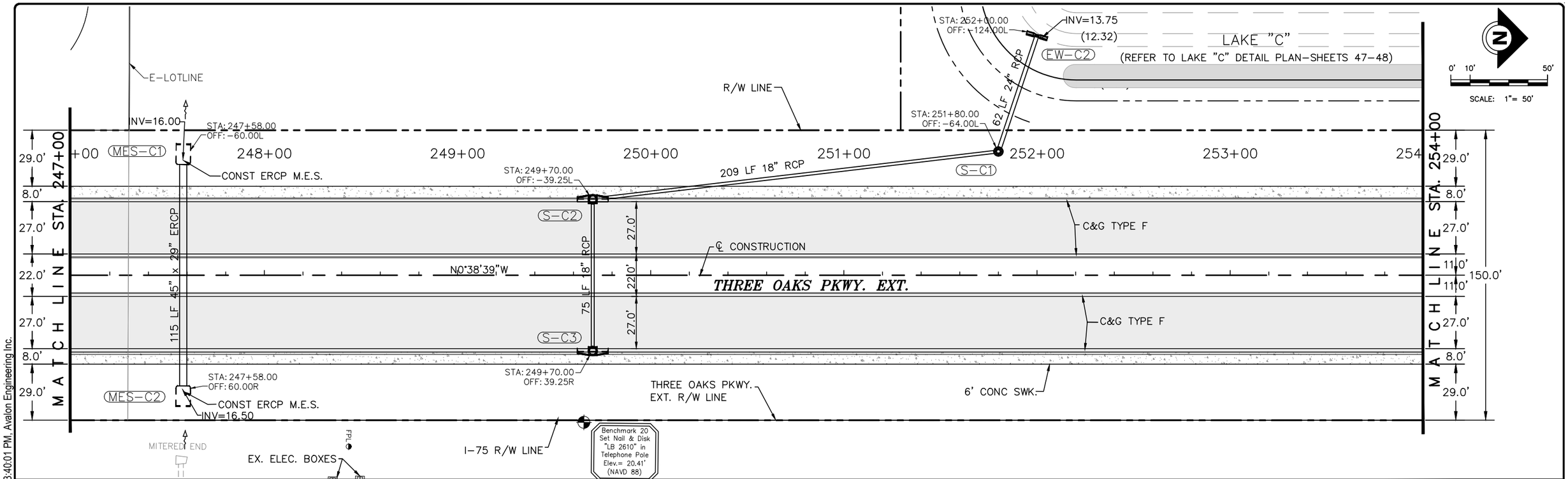

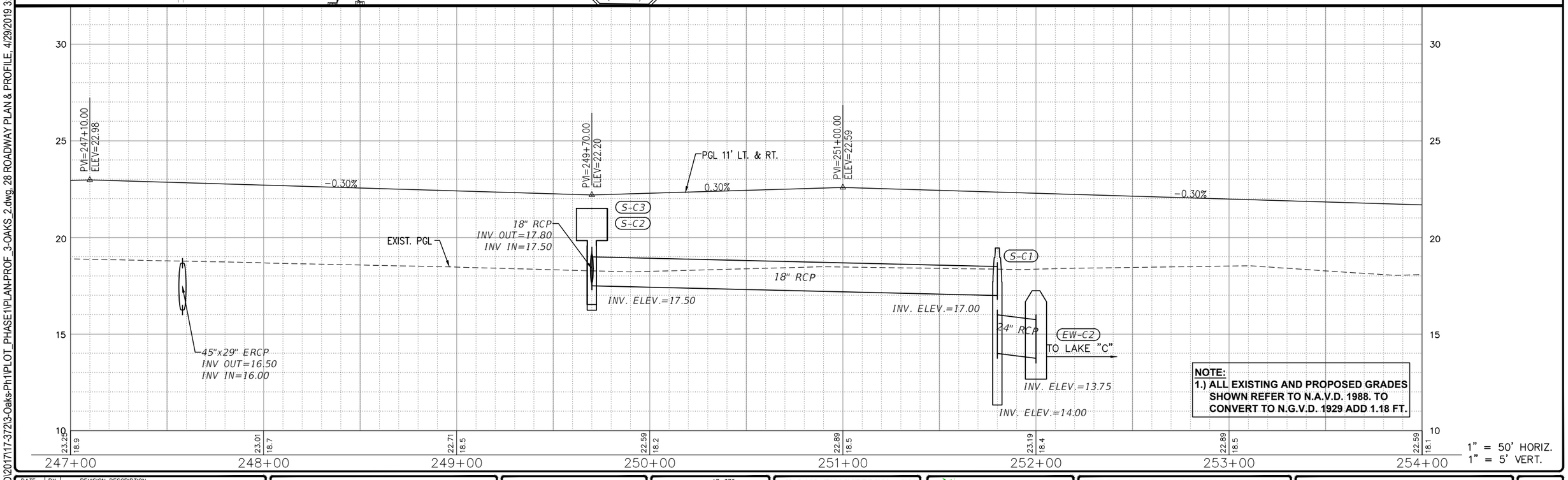

NOTE:
1.) ALL EXISTING AND PROPOSED GRADES SHOWN REFER TO N.A.V.D. 1988. TO CONVERT TO N.G.V.D. 1929 ADD 1.18 FT.

P:\CAD\2017\17-372\3-Oaks-Ph1\PLOT_PHASE1\PLAN-PROF_3-OAKS_2.dwg, 28 ROADWAY PLAN & PROFILE, 4/29/2019 3:40:01 PM, Avalon Engineering Inc.

DATE	BY	REVISION DESCRIPTION

60% PLANS

AVALON PROJECT: 17-372
PROJ. MGR. Jack Schrager, PE, VP
LEE COUNTY DOT PROJECT: CN160642/ANB
LDOT PROJ. MGR. VINCENT MILLER

AVALON ENGINEERING, INC.
2503 DEL PRADO BLVD. SUITE 200
CAPE CORAL, FLORIDA 33904
FBPE#3128 (239) 573-2077

LEE COUNTY DEPARTMENT OF TRANSPORTATION
(239) 533-8580

THREE OAKS PARKWAY EXTENSION
PHASE 1: FIDDLESTICKS CANAL TO STA 265+20
LEE COUNTY, FLORIDA

ROADWAY PLAN & PROFILE
STA 247+00 TO 254+00

SHEET 28 of 110

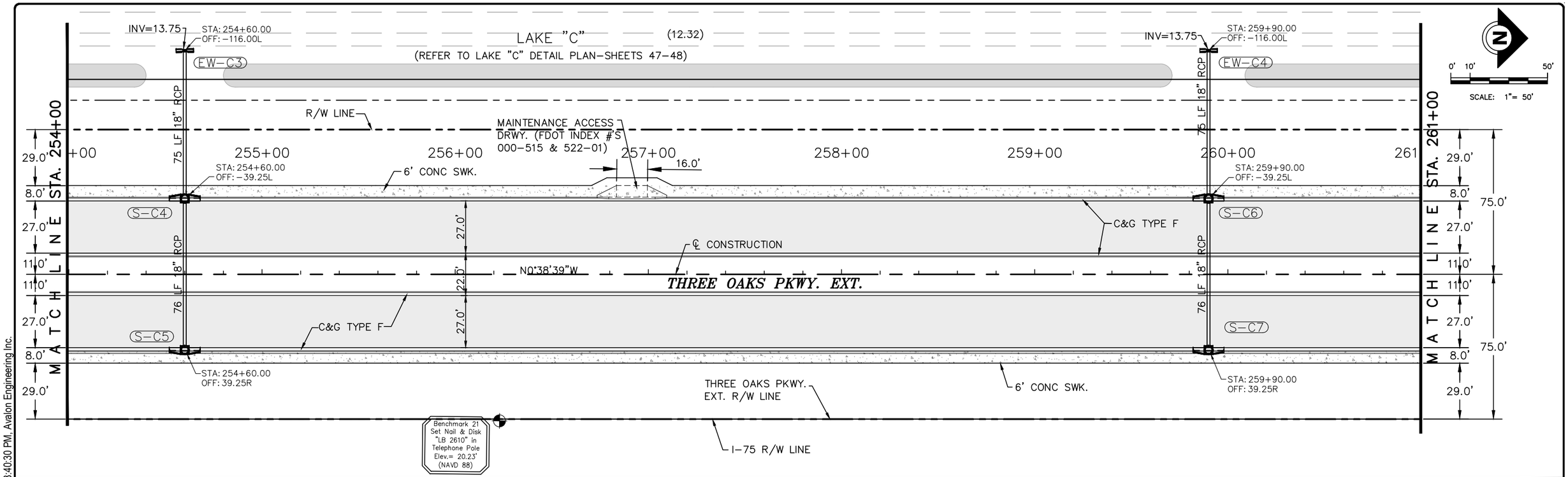

P:\CAD\2017\17-372\3-Oaks-Ph1\PLOT_PHASE1\PLAN-PROF_3-OAKS_2.dwg, 29 ROADWAY PLAN & PROFILE, 4/29/2019 3:40:30 PM, Avalon Engineering Inc.

DATE	BY	REVISION DESCRIPTION

60% PLANS

AVALON PROJECT: 17-372
PROJ. MGR. Jack Schrager, PE, VP
LEE COUNTY DOT PROJECT: CN160642/ANB
LDOT PROJ. MGR. VINCENT MILLER

AVALON ENGINEERING, INC.
2503 DEL PRADO BLVD, SUITE 200
CAPE CORAL, FLORIDA 33904
FBPE#3128 (239) 573-2077

LEE COUNTY DEPARTMENT OF TRANSPORTATION
(239) 533-8580

THREE OAKS PARKWAY EXTENSION
PHASE 1: FIDDLESTICKS CANAL TO STA 265+20
LEE COUNTY, FLORIDA

ROADWAY PLAN & PROFILE
STA 254+00 TO 261+00

SHEET
29 of 110

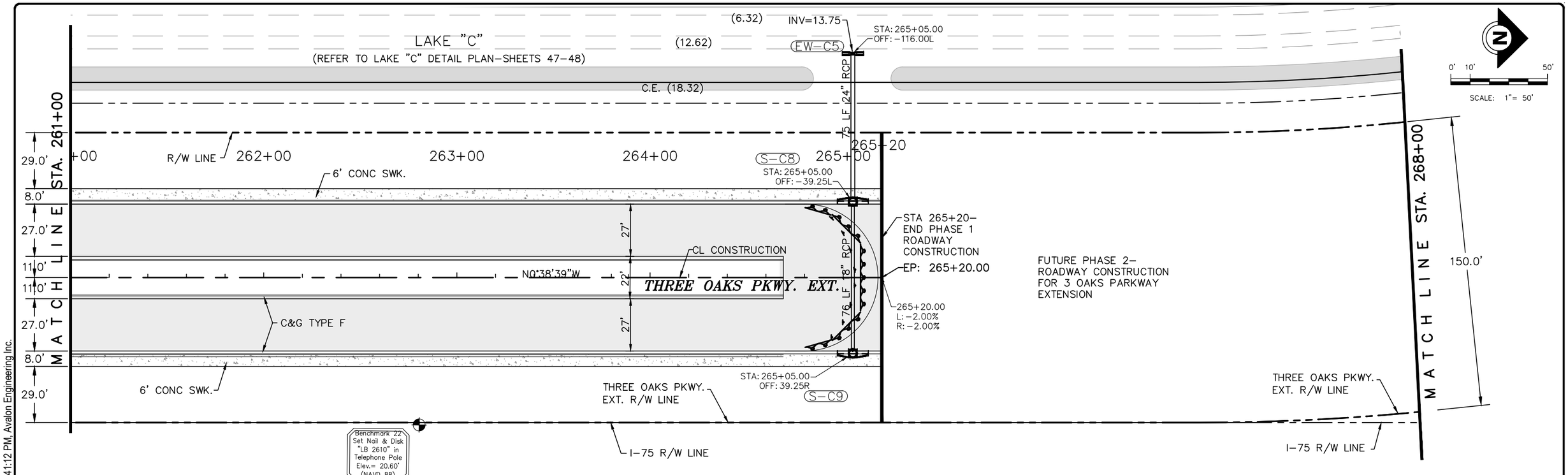

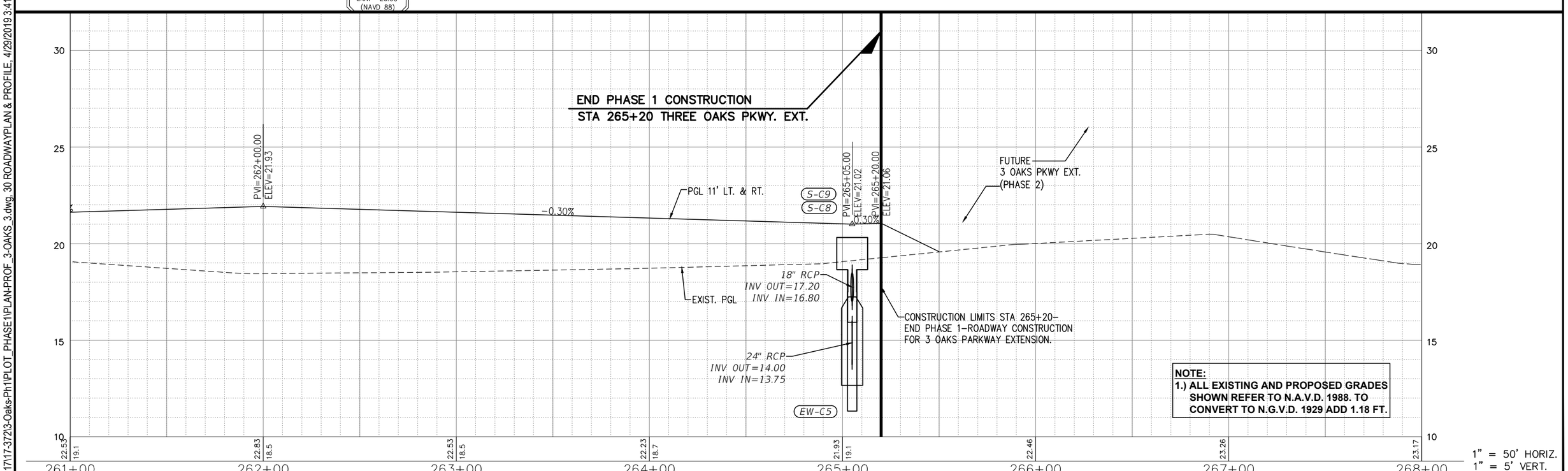

DATE	BY	REVISION DESCRIPTION

60% PLANS

AVALON PROJECT: 17–372
PROJ. MGR. Jack Schrager, PE, VP
LEE COUNTY DOT PROJECT: CN160642/ANB
LDOT PROJ. MGR. VINCENT MILLER

AVALON ENGINEERING, INC.
2503 DEL PRADO BLVD, SUITE 200
CAPE CORAL, FLORIDA 33904
FBPE#3128 (239) 573–2077

LEE COUNTY DEPARTMENT OF TRANSPORTATION
(239) 533–8580

THREE OAKS PARKWAY EXTENSION
PHASE 1: FIDDLESTICKS CANAL TO STA 265+20
LEE COUNTY, FLORIDA

ROADWAYPLAN & PROFILE
STA 261+00 TO 268+00

SHEET 30 of 110

P:\CAD\2017\17-372\3-Oaks-Ph1\PLOT_PHASE1\PLAN-PROF_3-OAKS_3.dwg, 30 ROADWAYPLAN & PROFILE, 4/29/2019 3:41:12 PM, Avalon Engineering Inc.

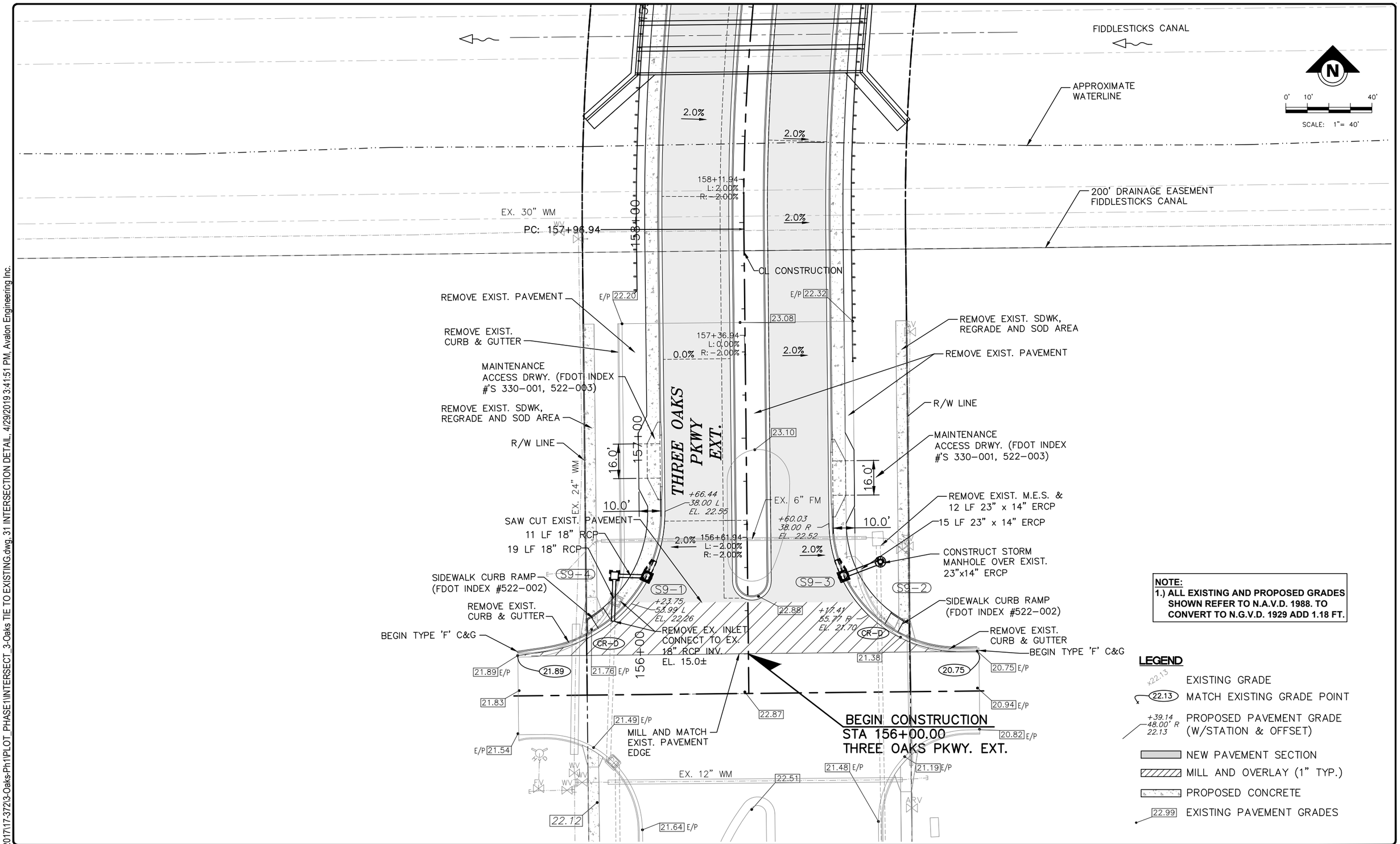

NOTE:
1.) ALL EXISTING AND PROPOSED GRADES SHOWN REFER TO N.A.V.D. 1988. TO CONVERT TO N.G.V.D. 1929 ADD 1.18 FT.

LEGEND

- x22.13 — EXISTING GRADE
- 22.13 — MATCH EXISTING GRADE POINT
- +39.14 48.00' R 22.13 — PROPOSED PAVEMENT GRADE (W/STATION & OFFSET)
- NEW PAVEMENT SECTION
- MILL AND OVERLAY (1" TYP.)
- PROPOSED CONCRETE
- 22.99 — EXISTING PAVEMENT GRADES

P:\CAD\2017\17-372\3-Oaks-Ph1\PLOT_PHASE1\INTERSECT_3-Oaks TIE TO EXISTING.dwg, 31 INTERSECTION DETAIL, 4/29/2019 3:41:51 PM, Avalon Engineering Inc.

DATE	BY	REVISION DESCRIPTION

60% PLANS

AVALON PROJECT: 17-372
PROJ. MGR. Jack Schrager, PE, VP
LEE COUNTY DOT PROJECT: CN160642/ANB
LDOT PROJ. MGR. VINCENT MILLER

AVALON ENGINEERING, INC.
2503 DEL PRADO BLVD, SUITE 200
CAPE CORAL, FLORIDA 33904
FBPE#3128 (239) 573-2077

LEE COUNTY DEPARTMENT OF TRANSPORTATION
(239) 533-8580

THREE OAKS PARKWAY EXTENSION
PHASE 1: FIDDLESTICKS CANAL TO STA 265+20
LEE COUNTY, FLORIDA

INTERSECTION DETAIL
BEGIN STA 156+00

SHEET 31 of 110

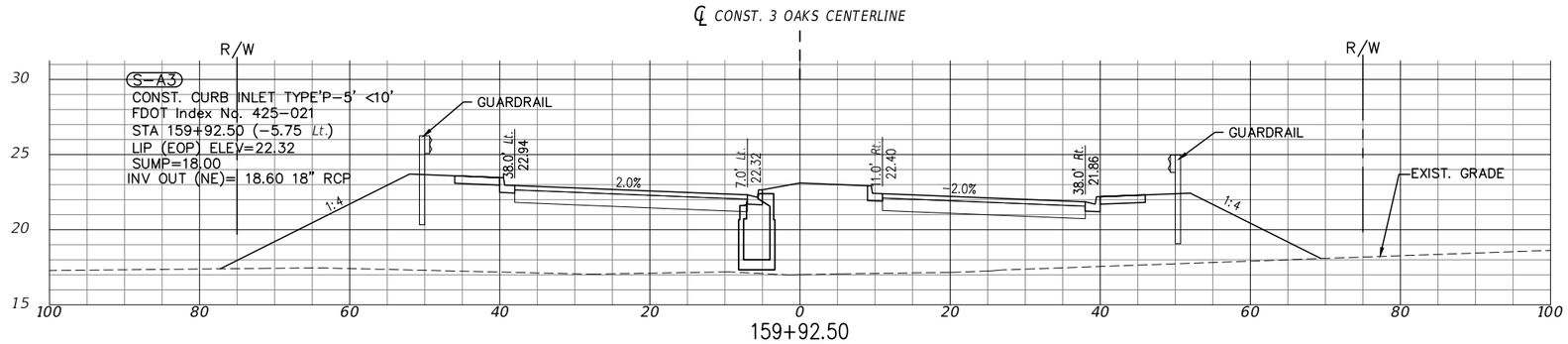

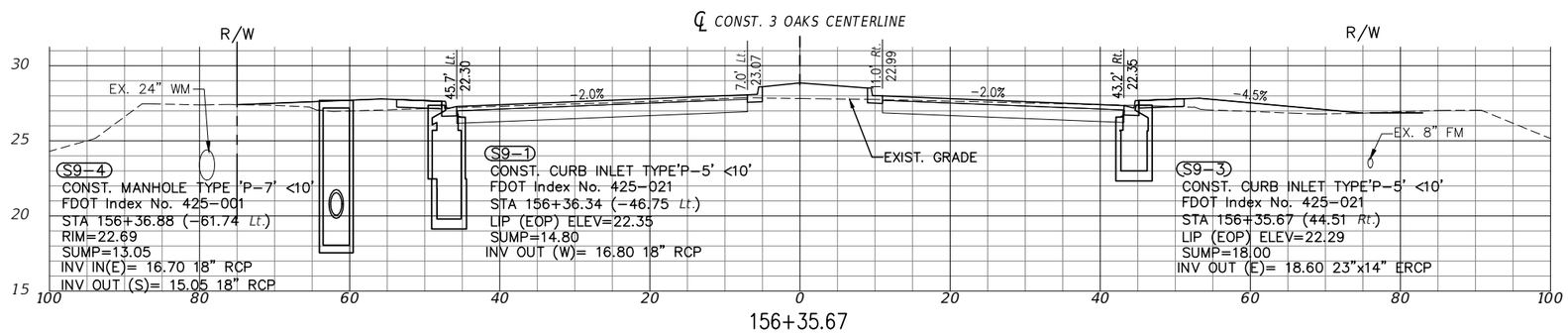

NOTE:
1.) ALL EXISTING AND PROPOSED GRADES SHOWN ON THIS SHEET REFER TO N.A.V.D. 1988. TO CONVERT TO N.G.V.D. 1929 ADD 1.18 FT.

P:\CAD\2017\17-372\3-Oaks-Ph1\PLOT_PHASE1\DRNG-STR_X-SECT.dwg, 32 DRAINAGE STRUCTURES, 4/29/2019 3:42:46 PM, Avalon Engineering Inc.

DATE	BY	REVISION DESCRIPTION

60% PLANS

AVALON PROJECT: 17-372
PROJ. MGR. Jack Schrager, PE, VP
LEE COUNTY DOT PROJECT: CN160642/ANB
LDOT PROJ. MGR. VINCENT MILLER

AVALON ENGINEERING, INC.
2503 DEL PRADO BLVD, SUITE 200
CAPE CORAL, FLORIDA 33904
FBPE#3128 (239) 573-2077

LEE COUNTY DEPARTMENT OF TRANSPORTATION
(239) 533-8580

THREE OAKS PARKWAY EXTENSION
PHASE 1: FIDDLESTICKS CANAL TO STA 265+20
LEE COUNTY, FLORIDA

DRAINAGE STRUCTURES
THREE OAKS PKWY EXT.

SHEET 32 of 110

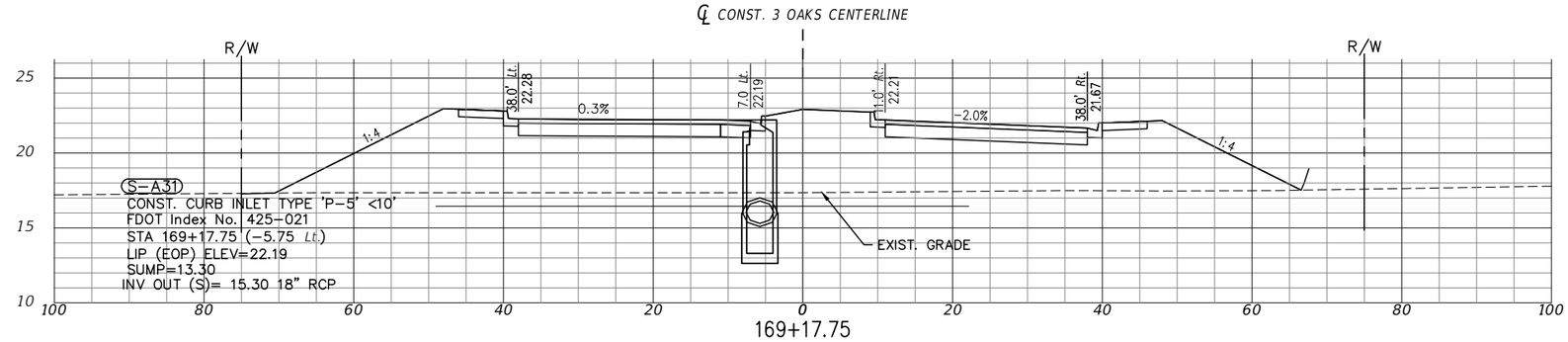

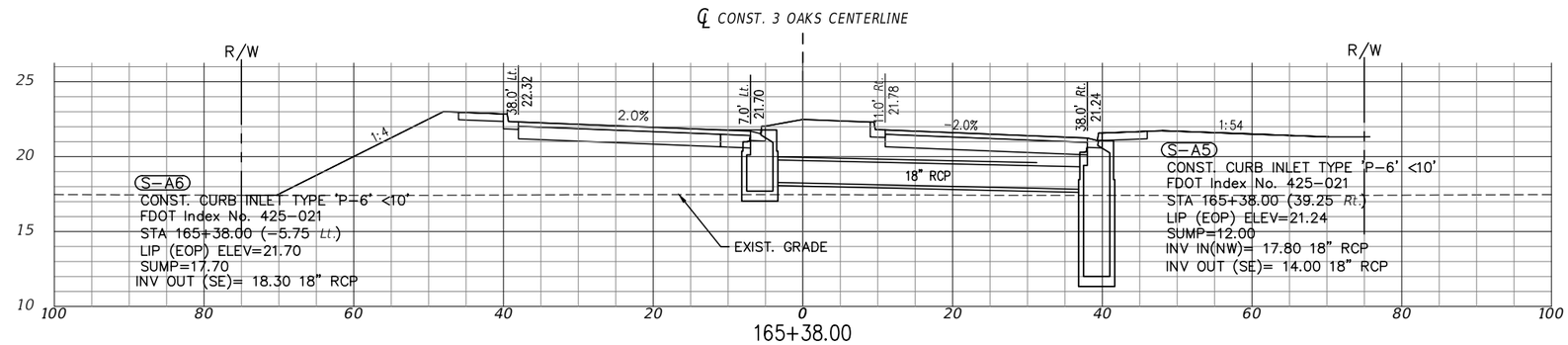

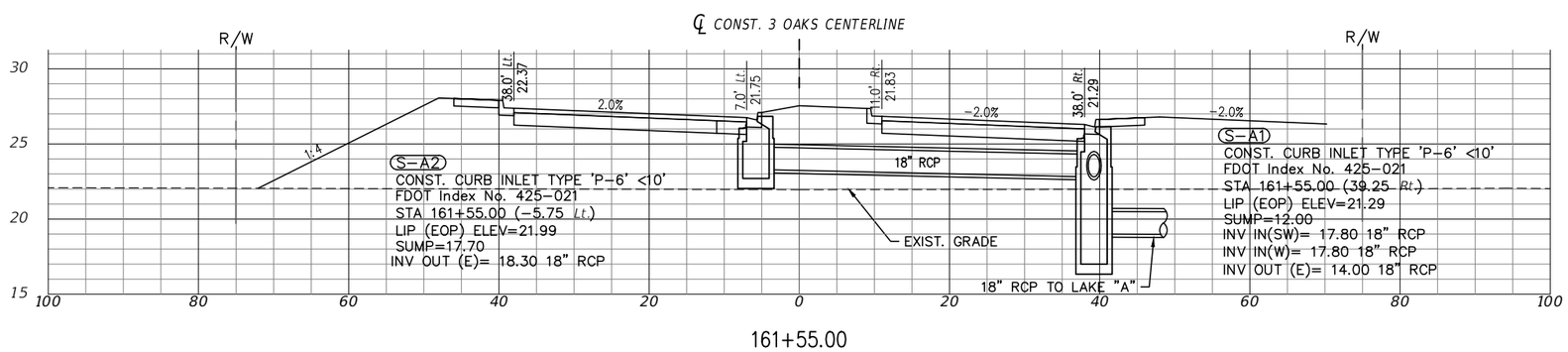

NOTE:
1.) ALL EXISTING AND PROPOSED GRADES SHOWN ON THIS SHEET REFER TO N.A.V.D. 1988. TO CONVERT TO N.G.V.D. 1929 ADD 1.18 FT.

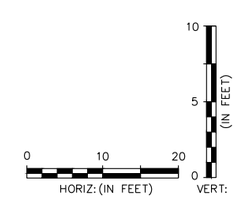

P:\CAD\2017\17-372\3-Oaks-Ph1\PLOT_PHASE1\DRNG-STR_X-SECT.dwg, 33 DRAINAGE STRUCTURES, 4/29/2019 3:43:10 PM, Avalon Engineering Inc.

DATE	BY	REVISION DESCRIPTION

60% PLANS

AVALON PROJECT: 17-372
PROJ. MGR. Jack Schrager, PE, VP
LEE COUNTY DOT PROJECT: CN160642/ANB
LDOT PROJ. MGR. VINCENT MILLER

AVALON ENGINEERING, INC.
2503 DEL PRADO BLVD, SUITE 200
CAPE CORAL, FLORIDA 33904
FBPE#3128 (239) 573-2077

LEE COUNTY DEPARTMENT OF TRANSPORTATION
(239) 533-8580

THREE OAKS PARKWAY EXTENSION
PHASE 1: FIDDLESTICKS CANAL TO STA 265+20
LEE COUNTY, FLORIDA

DRAINAGE STRUCTURES
THREE OAKS PKWY EXT.

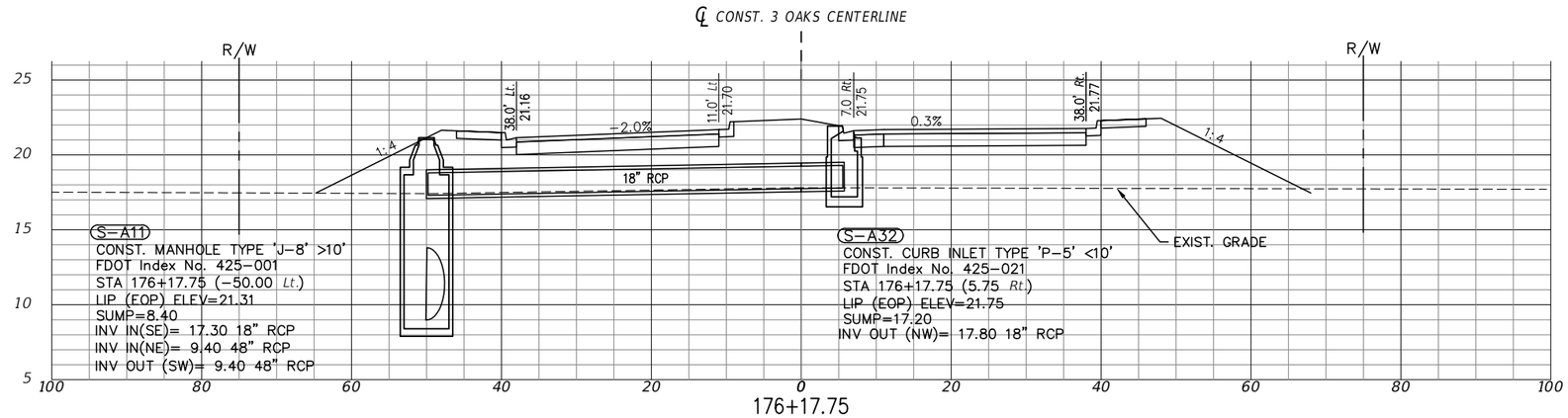

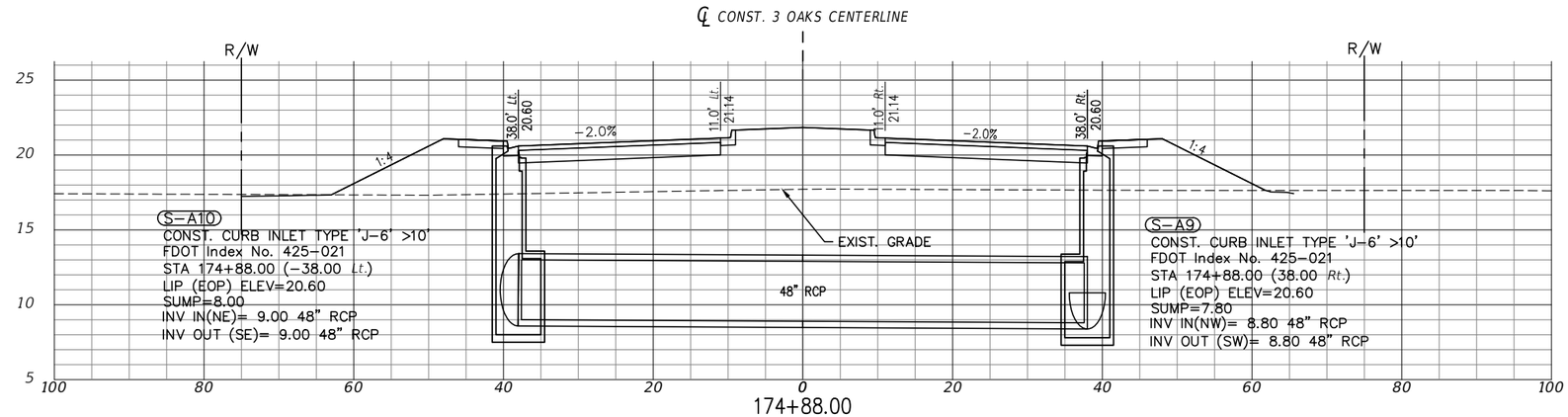

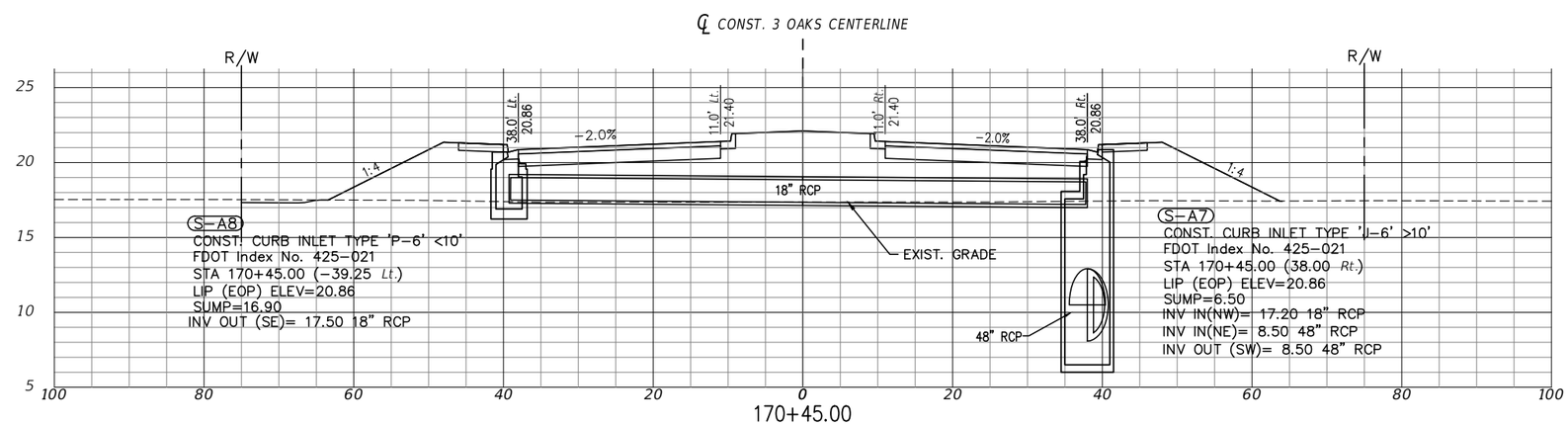

NOTE:
1.) ALL EXISTING AND PROPOSED GRADES SHOWN ON THIS SHEET REFER TO N.A.V.D. 1988. TO CONVERT TO N.G.V.D. 1929 ADD 1.18 FT.

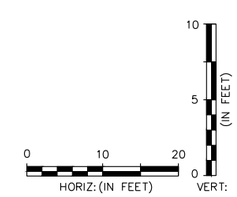

P:\CAD\2017\17-372\3-Oaks-Ph1\PLOT_PHASE1\DRNG-STR_X-SECT.dwg, 34 DRAINAGE STRUCTURES, 4/29/2019 3:43:47 PM, Avalon Engineering Inc.

DATE	BY	REVISION DESCRIPTION

60% PLANS

AVALON PROJECT: 17-372
PROJ. MGR. Jack Schrager, PE, VP
LEE COUNTY DOT PROJECT: CN160642/ANB
LDOT PROJ. MGR. VINCENT MILLER

AVALON ENGINEERING, INC.
2503 DEL PRADO BLVD, SUITE 200
CAPE CORAL, FLORIDA 33904
FBPE#3128 (239) 573-2077

LEE COUNTY DEPARTMENT OF TRANSPORTATION
(239) 533-8580

THREE OAKS PARKWAY EXTENSION
PHASE I: FIDDLESTICKS CANAL TO STA 265+20
LEE COUNTY, FLORIDA

DRAINAGE STRUCTURES
THREE OAKS PKWY EXT.

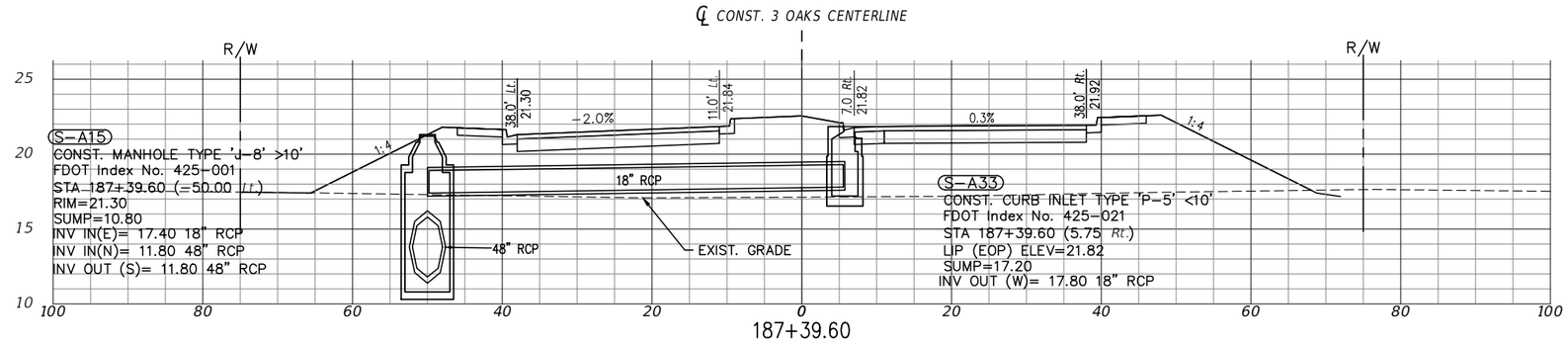

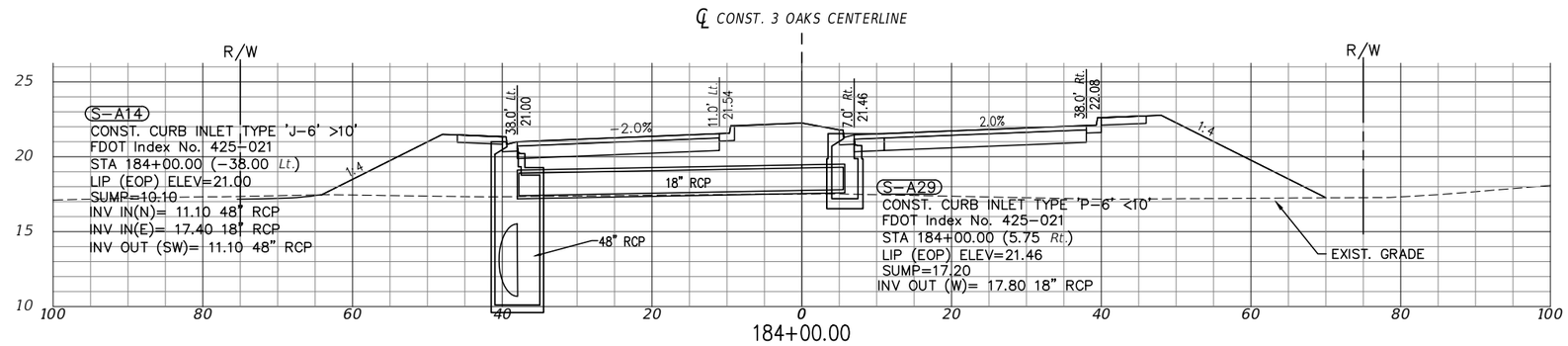

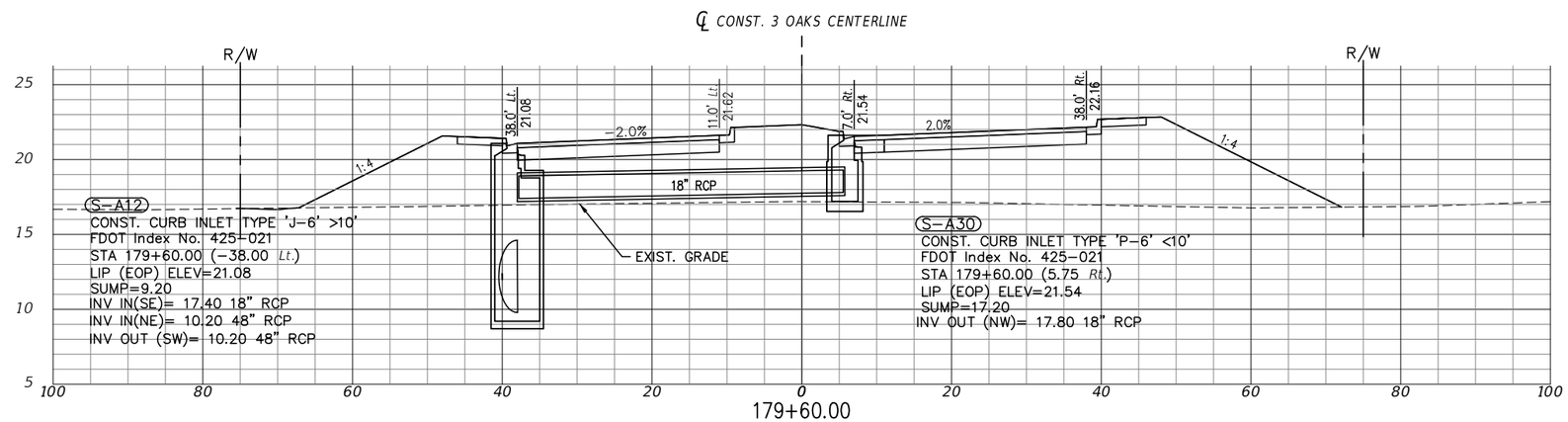

NOTE:
1.) ALL EXISTING AND PROPOSED GRADES SHOWN ON THIS SHEET REFER TO N.A.V.D. 1988. TO CONVERT TO N.G.V.D. 1929 ADD 1.18 FT.

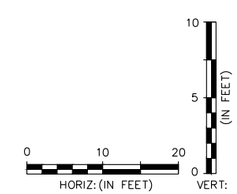

P:\CAD\2017\17-372\3-Oaks-Ph1\PLOT_PHASE1\DRNG-STR_X-SECT.dwg, 35 DRAINAGE STRUCTURES, 4/29/2019 3:44:18 PM, Avalon Engineering Inc.

DATE	BY	REVISION DESCRIPTION

60% PLANS

AVALON PROJECT: 17-372
PROJ. MGR. Jack Schrager, PE, VP
LEE COUNTY DOT PROJECT: CN160642/ANB
LDOT PROJ. MGR. VINCENT MILLER

AVALON ENGINEERING, INC.
2503 DEL PRADO BLVD. SUITE 200
CAPE CORAL, FLORIDA 33904
FBPE#3128 (239) 573-2077

LEE COUNTY DEPARTMENT OF TRANSPORTATION
(239) 533-8580

THREE OAKS PARKWAY EXTENSION
PHASE 1: FIDDLESTICKS CANAL TO STA 265+20
LEE COUNTY, FLORIDA

DRAINAGE STRUCTURES
THREE OAKS PKWY EXT.

SHEET 35 of 110

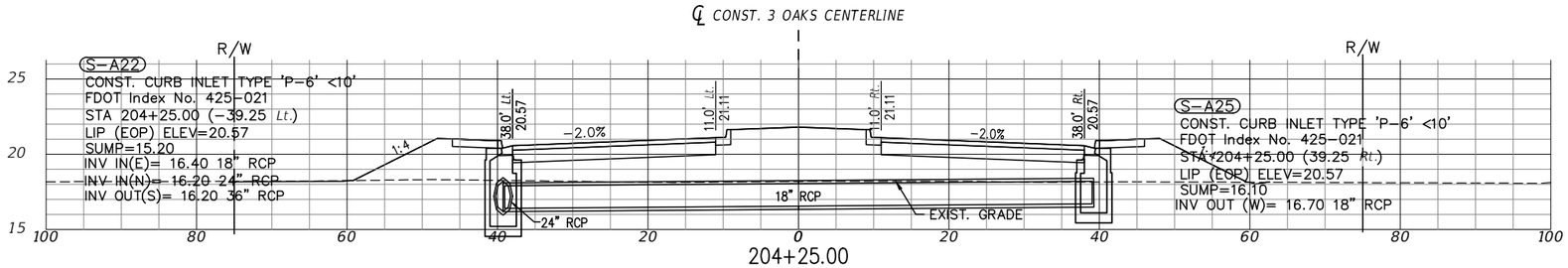

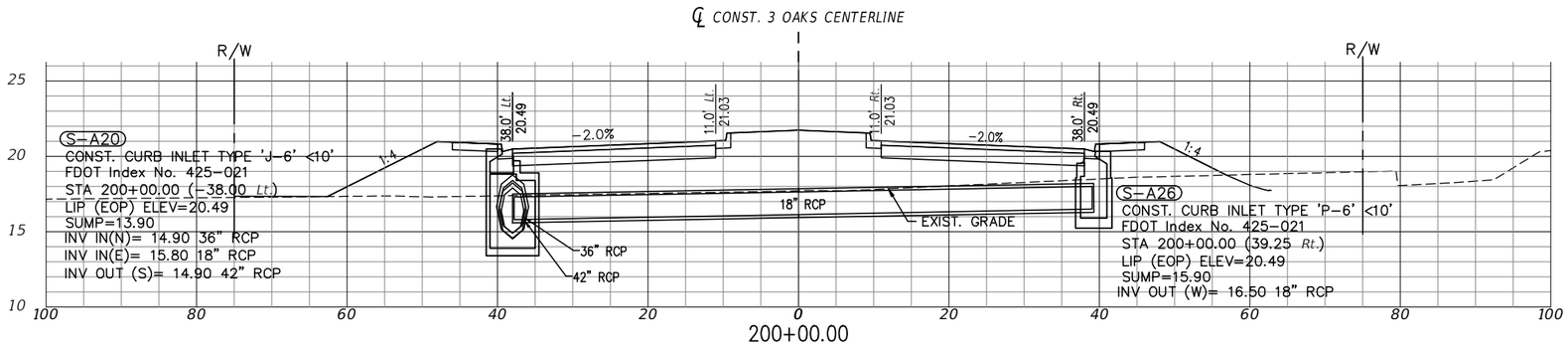

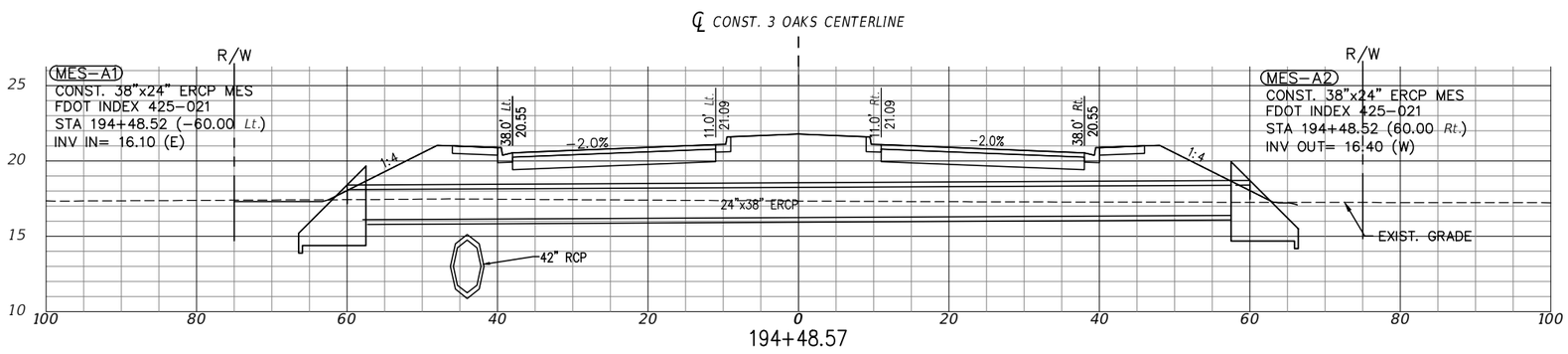

NOTE:
1.) ALL EXISTING AND PROPOSED GRADES SHOWN ON THIS SHEET REFER TO N.A.V.D. 1988. TO CONVERT TO N.G.V.D. 1929 ADD 1.18 FT.

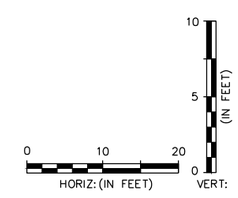

P:\CAD\2017\17-372\3-Oaks-Ph1\PLOT_PHASE1\DRNG-STR_X-SECT.dwg, 37 DRAINAGE STRUCTURES, 4/30/2019 8:02:40 AM, Avalon Engineering Inc.

DATE	BY	REVISION DESCRIPTION

60% PLANS

AVALON PROJECT: 17-372
PROJ. MGR. Jack Schrager, PE, VP
LEE COUNTY DOT PROJECT: CN160642/ANB
LDOT PROJ. MGR. VINCENT MILLER

AVALON ENGINEERING, INC.
2503 DEL PRADO BLVD, SUITE 200
CAPE CORAL, FLORIDA 33904
FBPE#3128 (239) 573-2077

LEE COUNTY DEPARTMENT OF TRANSPORTATION
(239) 533-8580

THREE OAKS PARKWAY EXTENSION
PHASE 1: FIDDLESTICKS CANAL TO STA 265+20
LEE COUNTY, FLORIDA

DRAINAGE STRUCTURES
THREE OAKS PKWY EXT.

SHEET
37 of 110

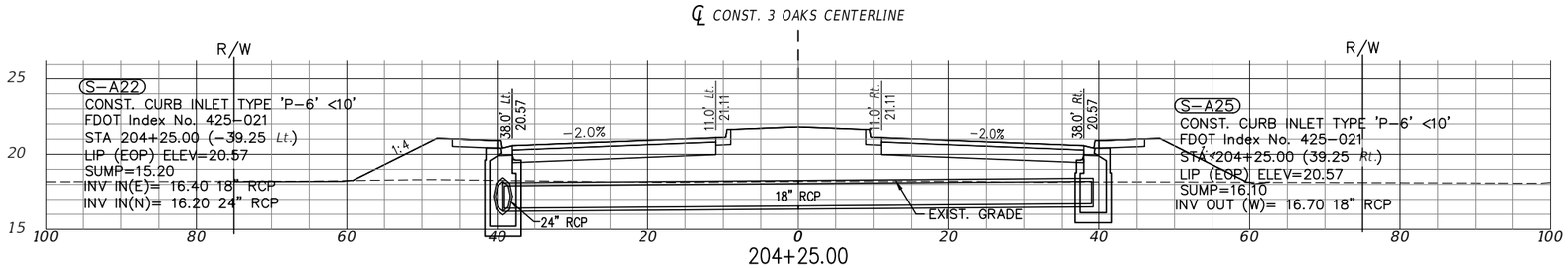

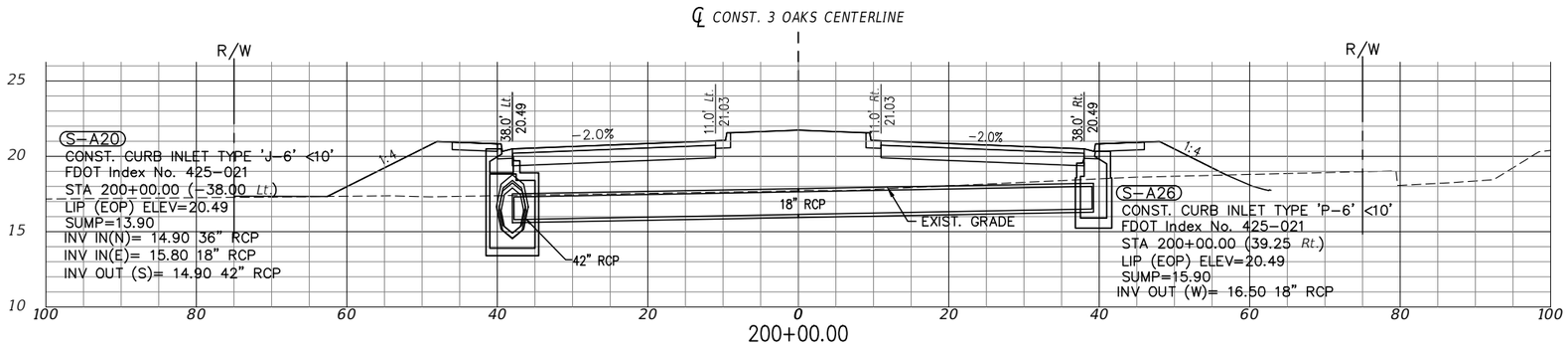

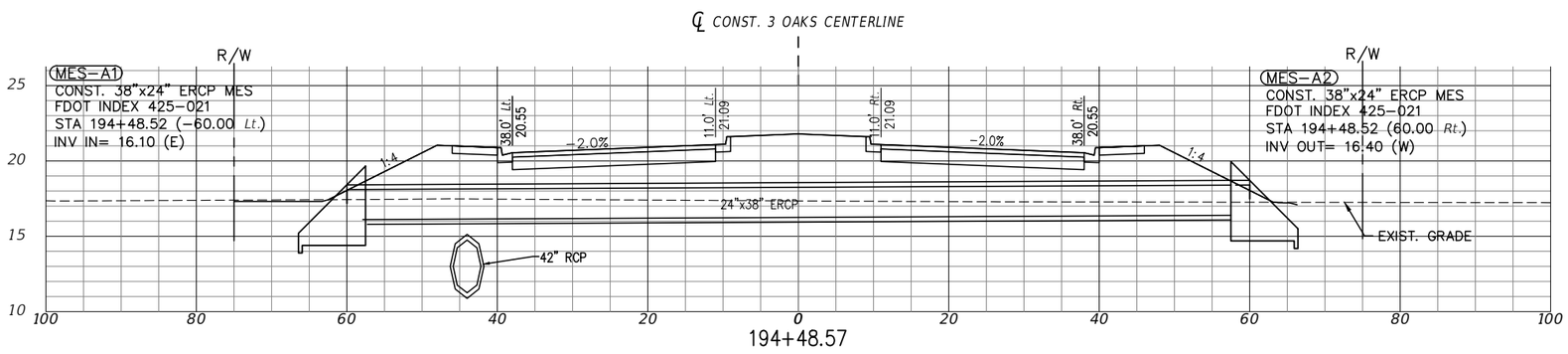

NOTE:
1.) ALL EXISTING AND PROPOSED GRADES SHOWN ON THIS SHEET REFER TO N.A.V.D. 1988. TO CONVERT TO N.G.V.D. 1929 ADD 1.18 FT.

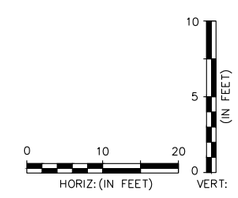

P:\CAD\2017\17-372\3-Oaks-Ph1\PLOT_PHASE1\DRNG-STR_X-SECT.dwg, 37 DRAINAGE STRUCTURES, 4/29/2019 3:44:52 PM, Avalon Engineering Inc.

DATE	BY	REVISION DESCRIPTION

60% PLANS

AVALON PROJECT: 17-372
PROJ. MGR. Jack Schrager, PE, VP
LEE COUNTY DOT PROJECT: CN160642/ANB
LDOT PROJ. MGR. VINCENT MILLER

AVALON ENGINEERING, INC.
2503 DEL PRADO BLVD, SUITE 200
CAPE CORAL, FLORIDA 33904
FBPE#3128 (239) 573-2077

LEE COUNTY DEPARTMENT OF TRANSPORTATION
(239) 533-8580

THREE OAKS PARKWAY EXTENSION
PHASE 1: FIDDLESTICKS CANAL TO STA 265+20
LEE COUNTY, FLORIDA

DRAINAGE STRUCTURES
THREE OAKS PKWY EXT.

SHEET
37 of 110

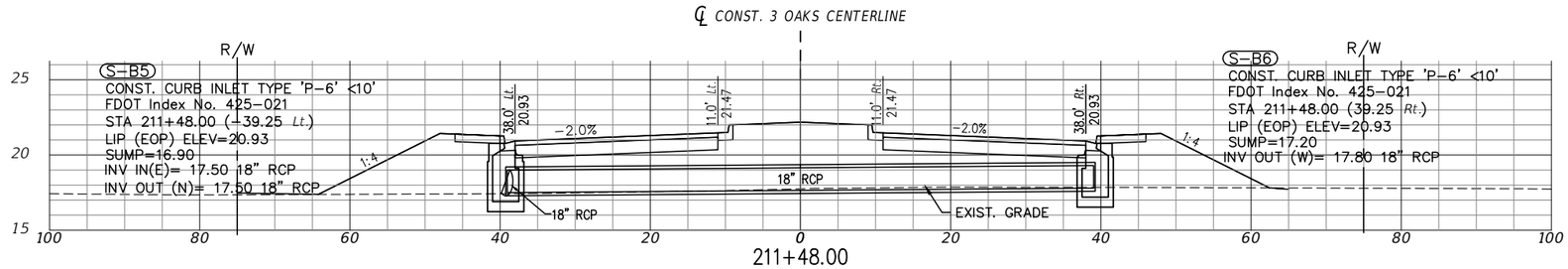

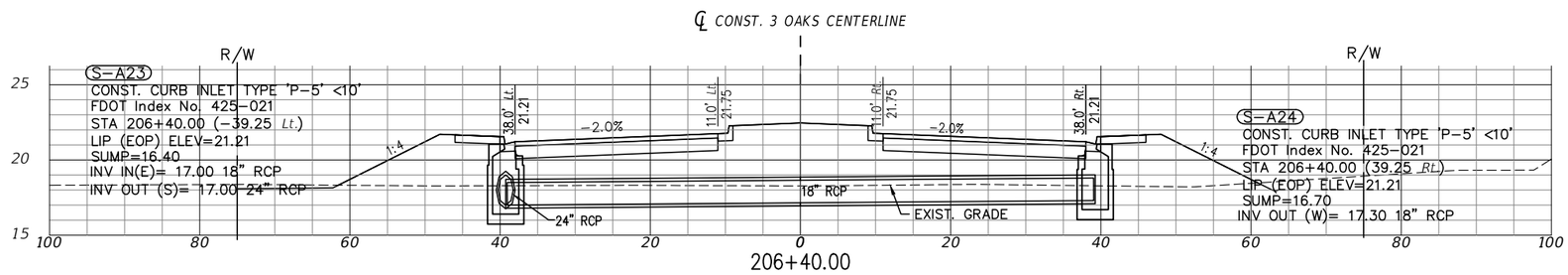

NOTE:
1.) ALL EXISTING AND PROPOSED GRADES SHOWN ON THIS SHEET REFER TO N.A.V.D. 1988. TO CONVERT TO N.G.V.D. 1929 ADD 1.18 FT.

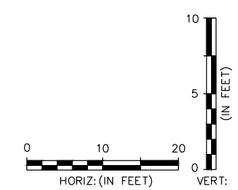

P:\CAD\2017\17-372\3-Oaks-Ph1\PLOT_PHASE1\DRNG-STR_X-SECT.dwg, 38 DRAINAGE STRUCTURES, 4/29/2019 3:45:15 PM, Avalon Engineering Inc.

DATE	BY	REVISION DESCRIPTION

60% PLANS

AVALON PROJECT: 17-372
PROJ. MGR. Jack Schrager, PE, VP
LEE COUNTY DOT PROJECT: CN160642/ANB
LDOT PROJ. MGR. VINCENT MILLER

AVALON ENGINEERING, INC.
2503 DEL PRADO BLVD, SUITE 200
CAPE CORAL, FLORIDA 33904
FBPE#3128 (239) 573-2077

LEE COUNTY DEPARTMENT OF TRANSPORTATION
(239) 533-8580

THREE OAKS PARKWAY EXTENSION
PHASE 1: FIDDLESTICKS CANAL TO STA 265+20
LEE COUNTY, FLORIDA

DRAINAGE STRUCTURES
THREE OAKS PKWY EXT.

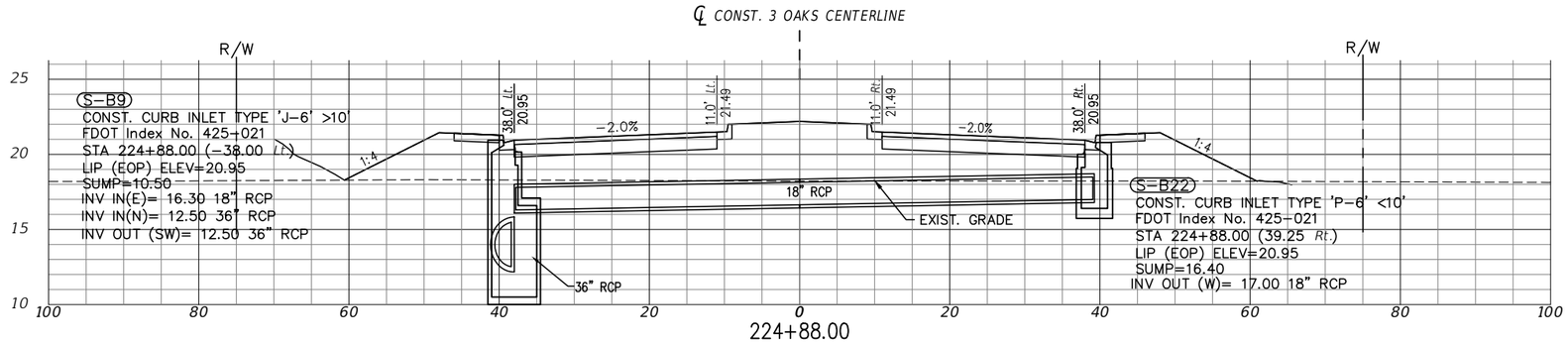

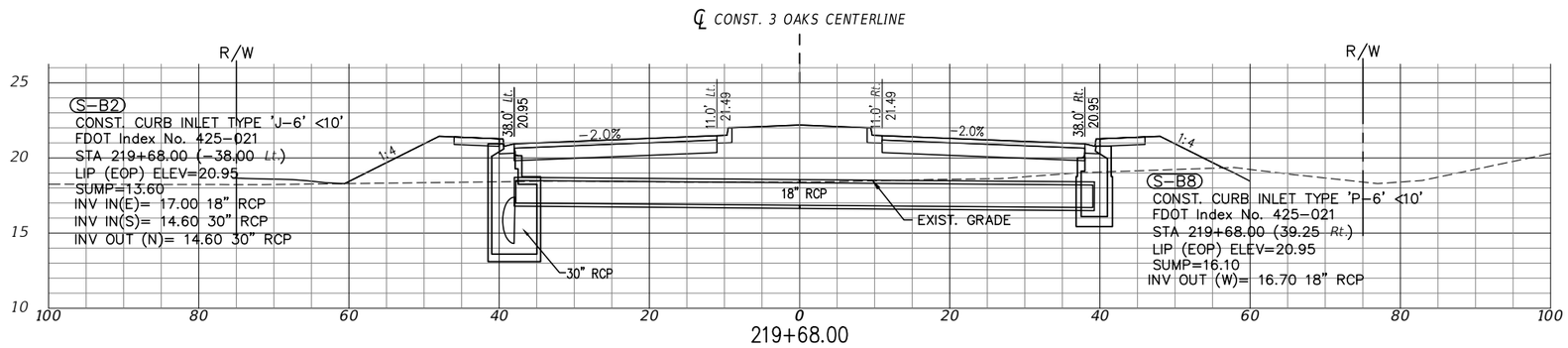

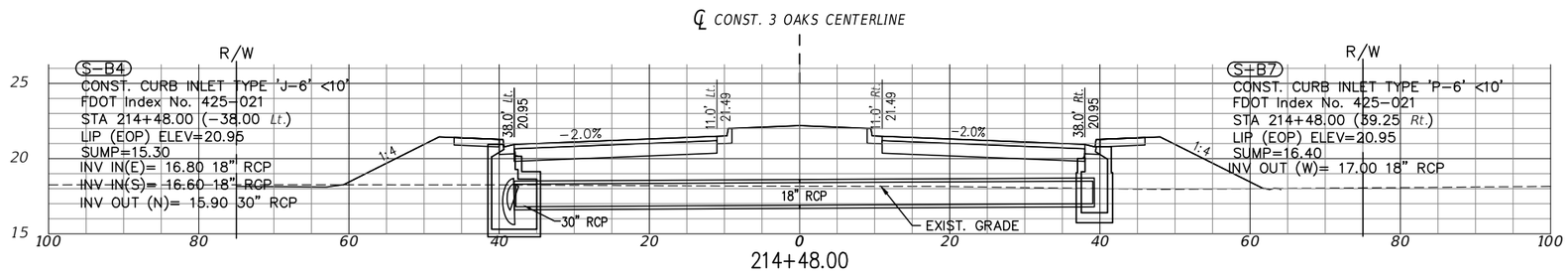

NOTE:
1.) ALL EXISTING AND PROPOSED GRADES SHOWN ON THIS SHEET REFER TO N.A.V.D. 1988. TO CONVERT TO N.G.V.D. 1929 ADD 1.18 FT.

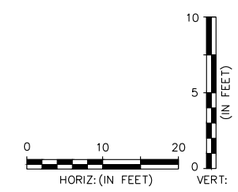

P:\CAD\2017\17-372\3-Oaks-Ph1\PLOT_PHASE1\DRNG-STR_X-SECT.dwg, 39 DRAINAGE STRUCTURES, 4/29/2019 3:45:37 PM, Avalon Engineering Inc.

DATE	BY	REVISION DESCRIPTION

60% PLANS

AVALON PROJECT: 17-372
PROJ. MGR. Jack Schrager, PE, VP
LEE COUNTY DOT PROJECT: CN160642/ANB
LDOT PROJ. MGR. VINCENT MILLER

AVALON ENGINEERING, INC.
2503 DEL PRADO BLVD, SUITE 200
CAPE CORAL, FLORIDA 33904
FBPE#3128 (239) 573-2077

LEE COUNTY DEPARTMENT OF TRANSPORTATION
(239) 533-8580

THREE OAKS PARKWAY EXTENSION
PHASE 1: FIDDLESTICKS CANAL TO STA 265+20
LEE COUNTY, FLORIDA

DRAINAGE STRUCTURES
THREE OAKS PKWY EXT.

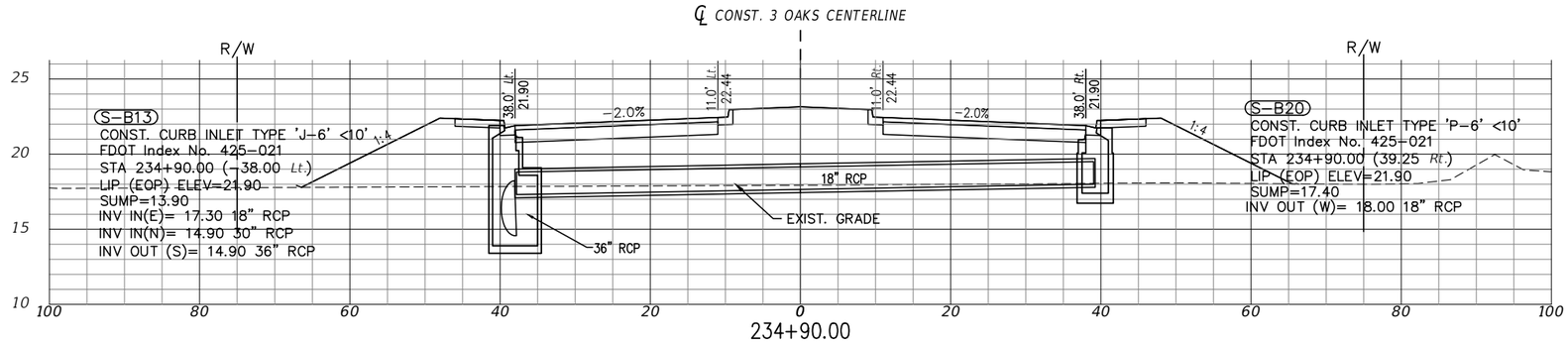

NOTE:
1.) ALL EXISTING AND PROPOSED GRADES SHOWN ON THIS SHEET REFER TO N.A.V.D. 1988. TO CONVERT TO N.G.V.D. 1929 ADD 1.18 FT.

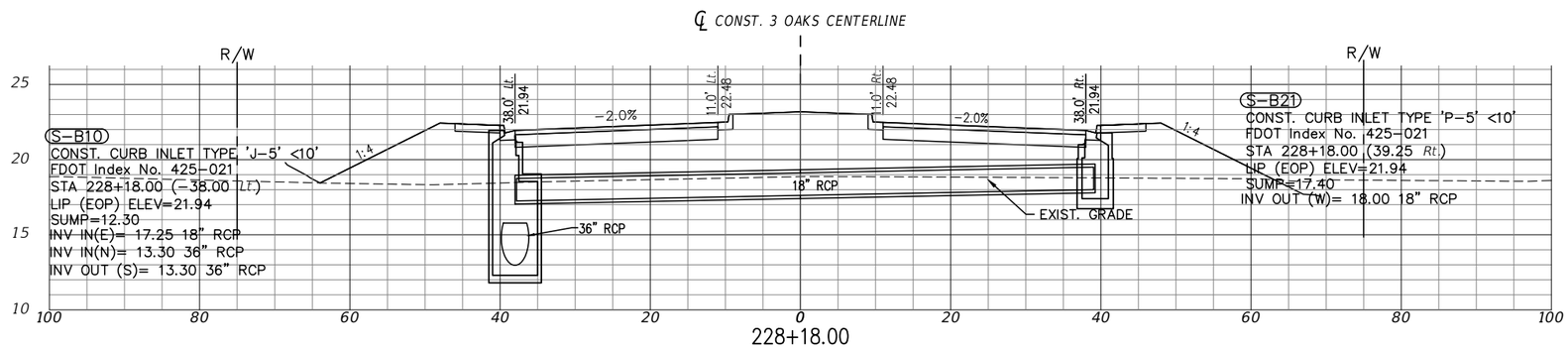

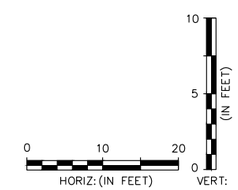

P:\CAD\2017\17-372\3-Oaks-Ph1\PLOT_PHASE1\DRNG-STR_X-SECT.dwg, 40 DRAINAGE STRUCTURES, 4/29/2019 3:45:59 PM, Avalon Engineering Inc.

DATE	BY	REVISION DESCRIPTION

60% PLANS

AVALON PROJECT: 17-372
PROJ. MGR. Jack Schrager, PE, VP
LEE COUNTY DOT PROJECT: CN160642/ANB
LDOT PROJ. MGR. VINCENT MILLER

AVALON ENGINEERING, INC.
2503 DEL PRADO BLVD, SUITE 200
CAPE CORAL, FLORIDA 33904
FBPE#3128 (239) 573-2077

LEE COUNTY DEPARTMENT OF TRANSPORTATION
(239) 533-8580

THREE OAKS PARKWAY EXTENSION
PHASE 1: FIDDLESTICKS CANAL TO STA 265+20
LEE COUNTY, FLORIDA

DRAINAGE STRUCTURES
THREE OAKS PKWY EXT.

SHEET
40 of 110

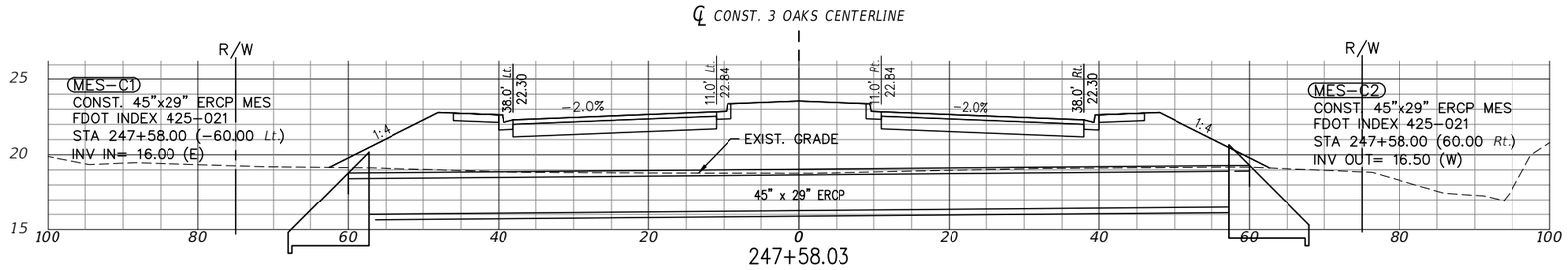

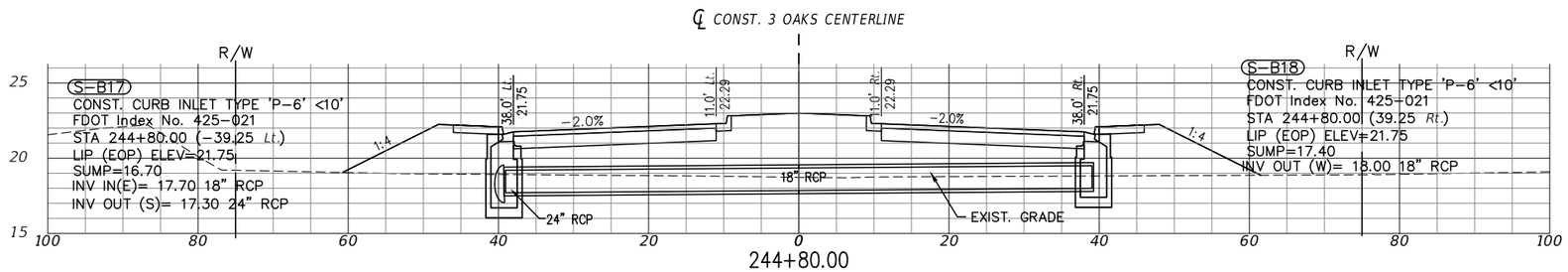

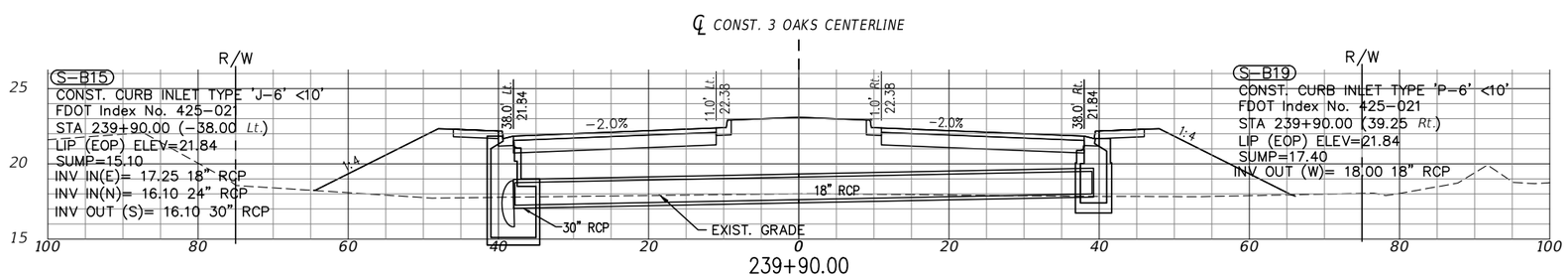

NOTE:
1.) ALL EXISTING AND PROPOSED GRADES SHOWN ON THIS SHEET REFER TO N.A.V.D. 1988. TO CONVERT TO N.G.V.D. 1929 ADD 1.18 FT.

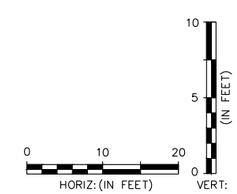

P:\CAD\2017\17-372\3-Oaks-Ph1\PLOT_PHASE1\DRNG-STR_X-SECT.dwg, 41 DRAINAGE STRUCTURES, 4/29/2019 3:46:22 PM, Avalon Engineering Inc.

DATE	BY	REVISION DESCRIPTION

60% PLANS

AVALON PROJECT: 17-372
PROJ. MGR. Jack Schrager, PE, VP
LEE COUNTY DOT PROJECT: CN160642/ANB
LDOT PROJ. MGR. VINCENT MILLER

AVALON ENGINEERING, INC.
2503 DEL PRADO BLVD. SUITE 200
CAPE CORAL, FLORIDA 33904
FBPE#3128 (239) 573-2077

LEE COUNTY DEPARTMENT OF TRANSPORTATION
(239) 533-8580

THREE OAKS PARKWAY EXTENSION
PHASE 1: FIDDLESTICKS CANAL TO STA 265+20
LEE COUNTY, FLORIDA

DRAINAGE STRUCTURES
THREE OAKS PKWY EXT.

SHEET
41 of 110

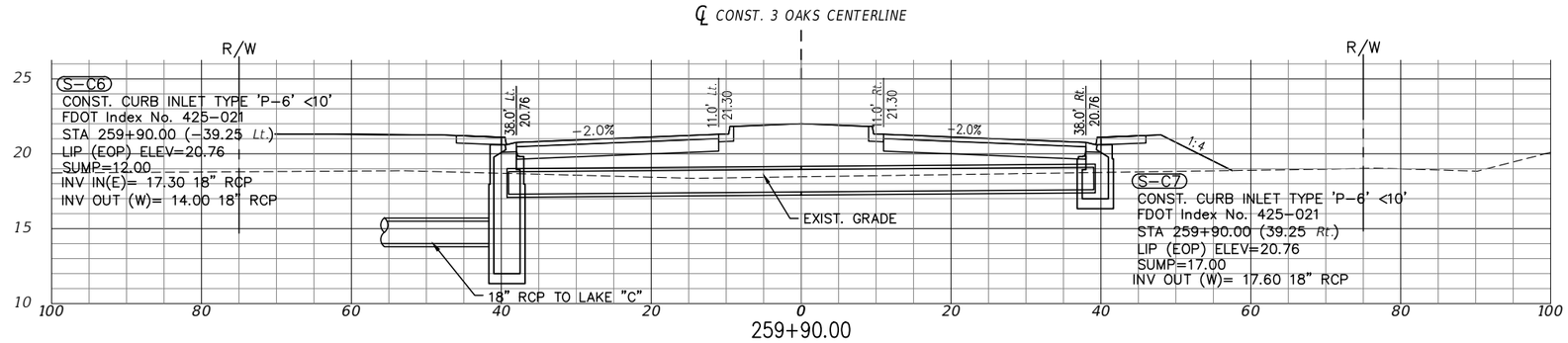

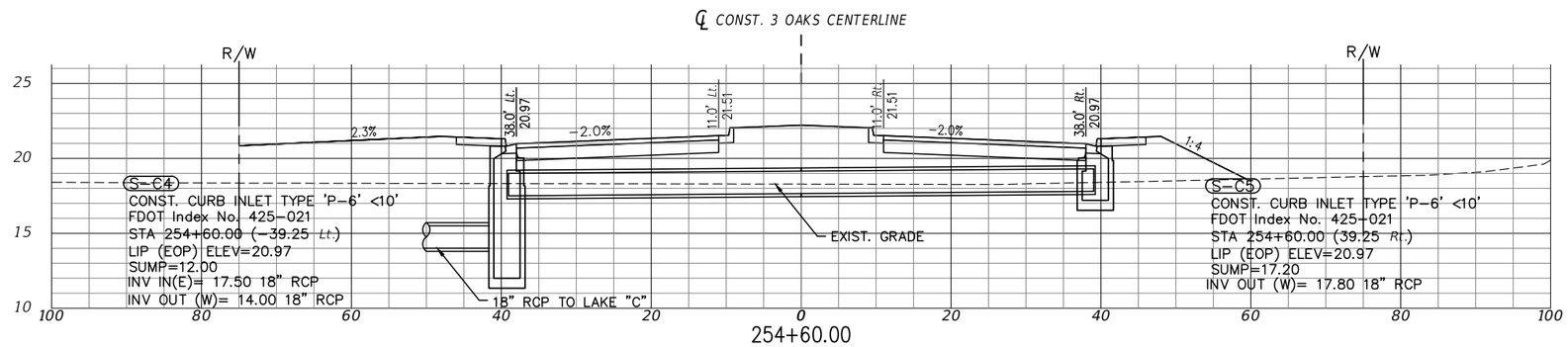

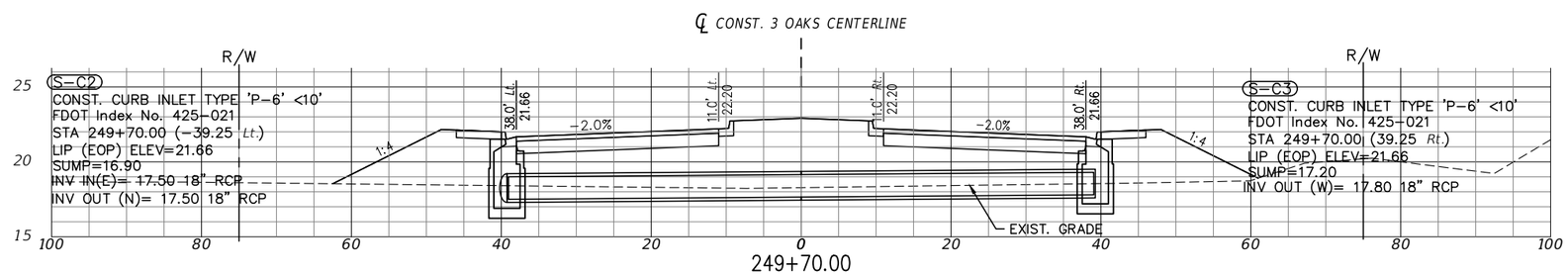

NOTE:
1.) ALL EXISTING AND PROPOSED GRADES SHOWN ON THIS SHEET REFER TO N.A.V.D. 1988. TO CONVERT TO N.G.V.D. 1929 ADD 1.18 FT.

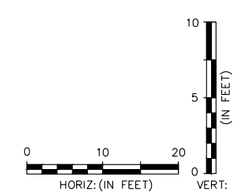

P:\CAD\2017\17-372\3-Oaks-Ph1\PLOT_PHASE1\DRNG-STR_X-SECT.dwg, 42 DRAINAGE STRUCTURES, 4/29/2019 3:46:38 PM, Avalon Engineering Inc.

DATE	BY	REVISION DESCRIPTION

60% PLANS

AVALON PROJECT: 17-372
PROJ. MGR. Jack Schrager, PE, VP
LEE COUNTY DOT PROJECT: CN160642/ANB
LDOT PROJ. MGR. VINCENT MILLER

AVALON ENGINEERING, INC.
2503 DEL PRADO BLVD. SUITE 200
CAPE CORAL, FLORIDA 33904
FBPE#3128 (239) 573-2077

LEE COUNTY DEPARTMENT OF TRANSPORTATION
(239) 533-8580

THREE OAKS PARKWAY EXTENSION
PHASE 1: FIDDLESTICKS CANAL TO STA 265+20
LEE COUNTY, FLORIDA

DRAINAGE STRUCTURES
THREE OAKS PKWY EXT.

SHEET 42 of 110

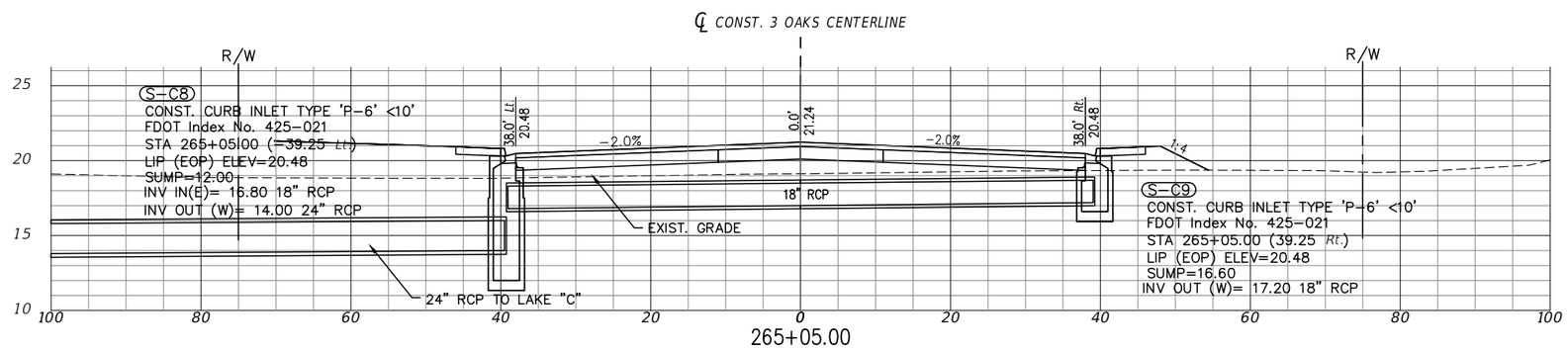

NOTE:
1.) ALL EXISTING AND PROPOSED GRADES SHOWN ON THIS SHEET REFER TO N.A.V.D. 1988. TO CONVERT TO N.G.V.D. 1929 ADD 1.18 FT.

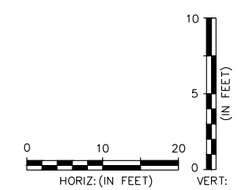

P:\CAD\2017\17-372\3-Oaks-Ph1\PLOT_PHASE1\DRNG-STR_X-SECT.dwg, 43 DRAINAGE STRUCTURES, 4/29/2019 3:46:59 PM, Avalon Engineering Inc.

DATE	BY	REVISION DESCRIPTION

60% PLANS

AVALON PROJECT: 17-372
PROJ. MGR. Jack Schrager, PE, VP
LEE COUNTY DOT PROJECT: CN160642/ANB
LDOT PROJ. MGR. VINCENT MILLER

AVALON ENGINEERING, INC.
2503 DEL PRADO BLVD, SUITE 200
CAPE CORAL, FLORIDA 33904
FBPE#3128 (239) 573-2077

LEE COUNTY DEPARTMENT OF TRANSPORTATION
(239) 533-8580

THREE OAKS PARKWAY EXTENSION
PHASE 1: FIDDLESTICKS CANAL TO STA 265+20
LEE COUNTY, FLORIDA

DRAINAGE STRUCTURES
THREE OAKS PKWY EXT.

SHEET
43 of 110

NOTE:
1.) ALL EXISTING AND PROPOSED GRADES SHOWN ON THIS SHEET REFER TO N.A.V.D. 1988. TO CONVERT TO N.G.V.D. 1929 ADD 1.18 FT.

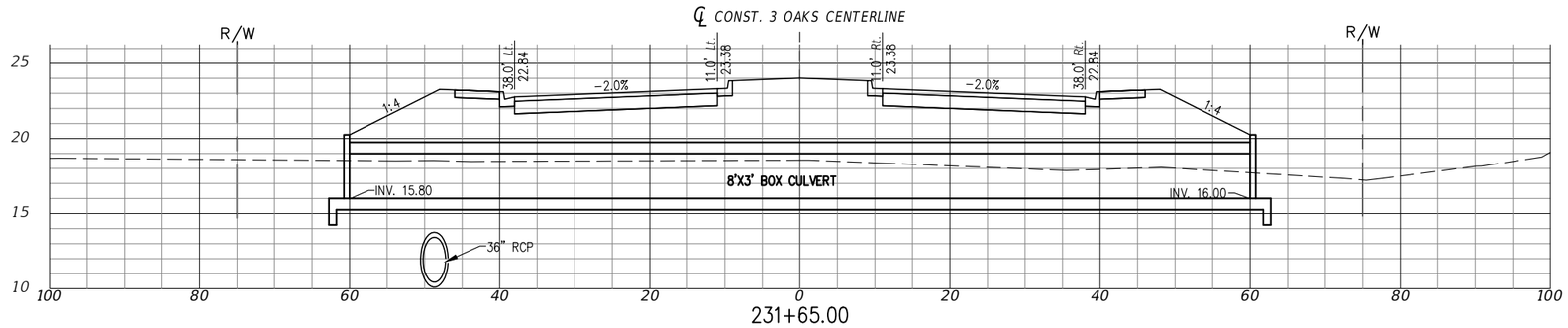

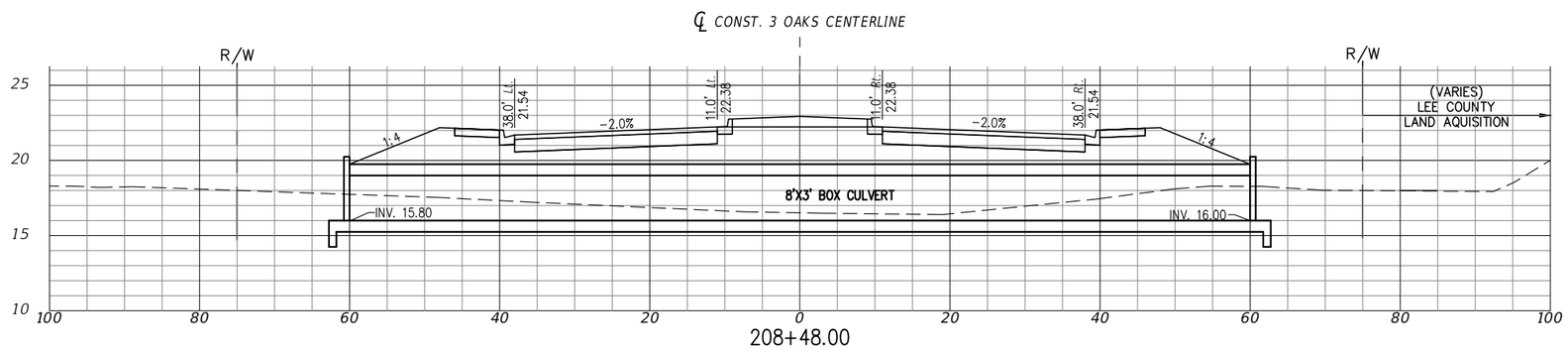

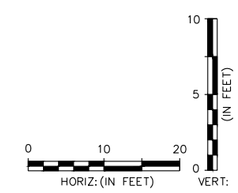

P:\CAD\2017\17-372\3-Oaks-Ph1\PLOT_PHASE1\BOX CULVERT-SEC.dwg, 44 SECTIONS AT BOX CULVERTS, 4/29/2019 3:47:14 PM, Avalon Engineering Inc.

DATE	BY	REVISION DESCRIPTION

60% PLANS

AVALON PROJECT: 17-372
PROJ. MGR. Jack Schrager, PE, VP
LEE COUNTY DOT PROJECT: CN160642/ANB
LDOT PROJ. MGR. VINCENT MILLER

AVALON ENGINEERING, INC.
2503 DEL PRADO BLVD, SUITE 200
CAPE CORAL, FLORIDA 33904
FBPE#3128 (239) 573-2077

LEE COUNTY DEPARTMENT OF TRANSPORTATION
(239) 533-8580

THREE OAKS PARKWAY EXTENSION
PHASE 1: FIDDLESTICKS CANAL TO STA 265+20
LEE COUNTY, FLORIDA

SECTIONS AT BOX CULVERTS
THREE OAKS PKWY EXT.

SHEET 44 of 110

NOTE:
1.) ALL EXISTING AND PROPOSED GRADES SHOWN REFER TO N.A.V.D. 1988. TO CONVERT TO N.G.V.D. 1929 ADD 1.18 FT.

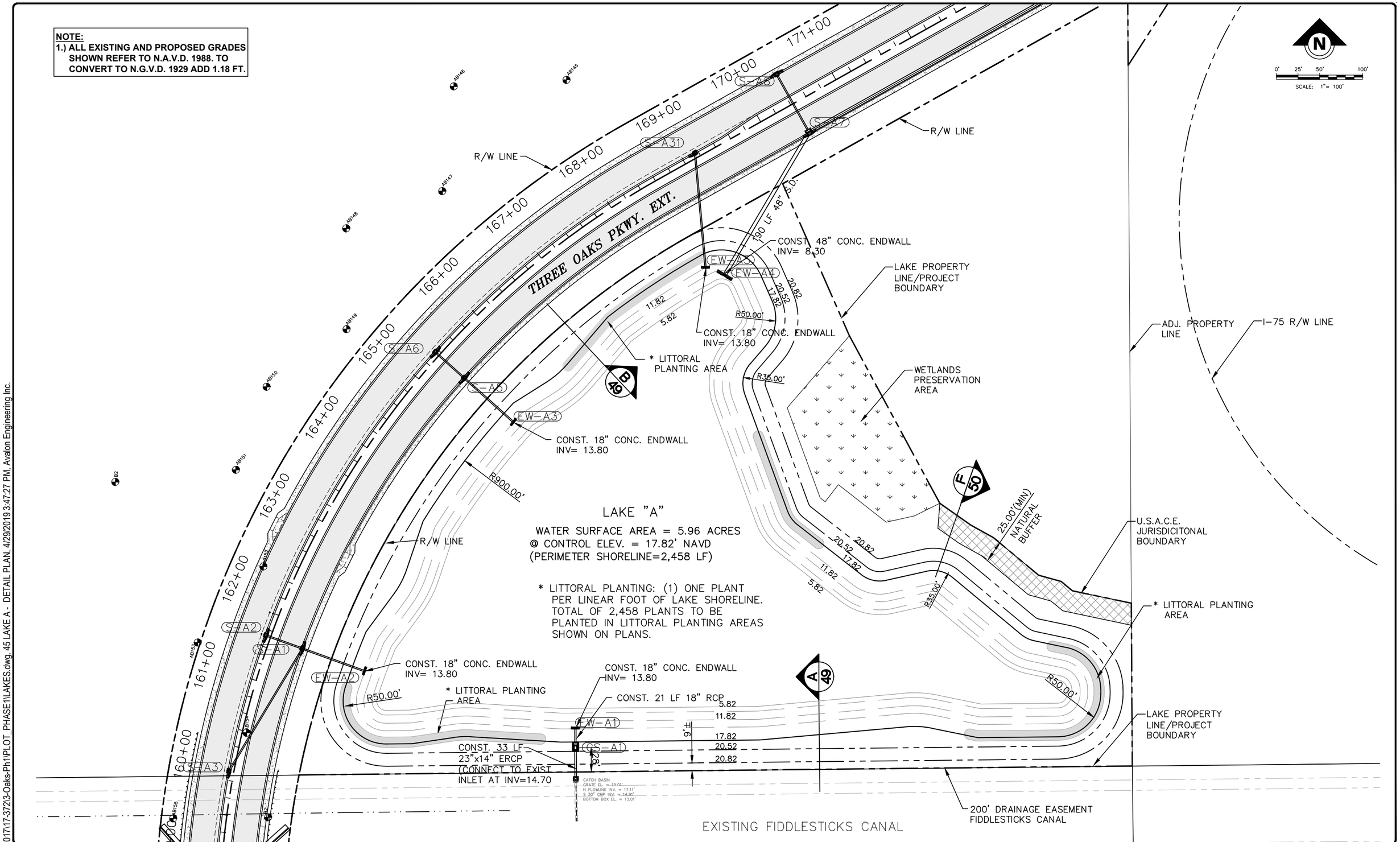

P:\CAD\2017\17-372\3-Oaks-Ph1\PLOT_PHASE1\LAKES.dwg, 45 LAKE A - DETAIL PLAN, 4/29/2019 3:47:27 PM, Avalon Engineering Inc.

DATE	BY	REVISION DESCRIPTION

60% PLANS

AVALON PROJECT: 17-372
PROJ. MGR. Jack Schrager, PE, VP
LEE COUNTY DOT PROJECT: CN160642/ANB
LDOT PROJ. MGR. VINCENT MILLER

AVALON ENGINEERING, INC.
2503 DEL PRADO BLVD, SUITE 200
CAPE CORAL, FLORIDA 33904
FBPE#3128 (239) 573-2077

LEE COUNTY DEPARTMENT OF TRANSPORTATION
(239) 533-8580

THREE OAKS PARKWAY EXTENSION
PHASE 1: FIDDLESTICKS CANAL TO STA 265+20
LEE COUNTY, FLORIDA

LAKE A - DETAIL PLAN
THREE OAKS PKWY EXT.

SHEET 45 of 110

NOTE:
1.) ALL EXISTING AND PROPOSED GRADES SHOWN REFER TO N.A.V.D. 1988. TO CONVERT TO N.G.V.D. 1929 ADD 1.18 FT.

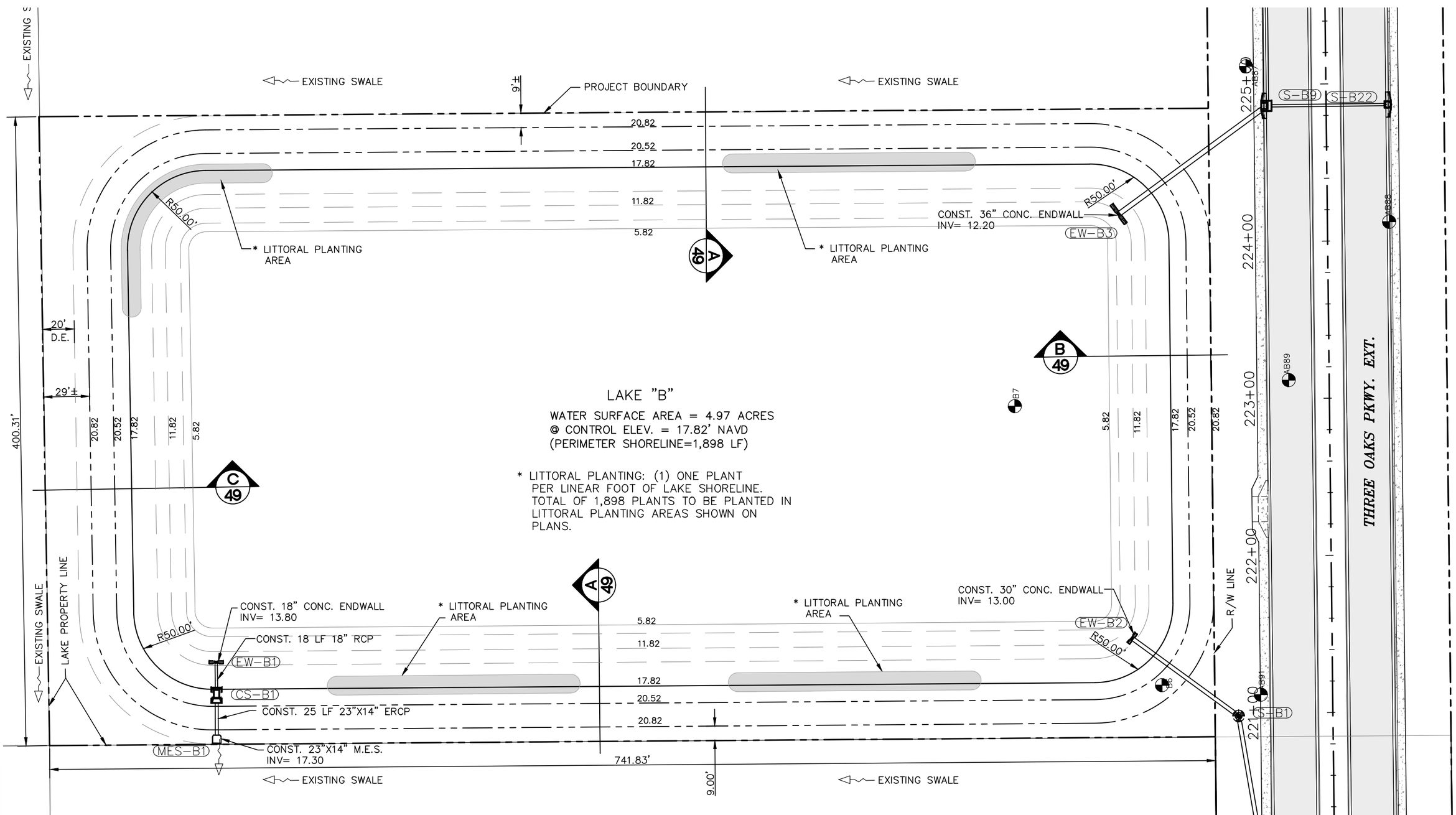

P:\CAD\2017\17-372\3-Oaks-Ph1\PLOT_PHASE1\LAKES.dwg, 46 LAKE B - DETAIL PLAN, 4/29/2019 3:47:31 PM, Avalon Engineering Inc.

DATE	BY	REVISION DESCRIPTION

60% PLANS

AVALON PROJECT: 17-372
PROJ. MGR. Jack Schrager, PE, VP
LEE COUNTY DOT PROJECT: CN160642/ANB
LDOT PROJ. MGR. VINCENT MILLER

AVALON ENGINEERING, INC.
2503 DEL PRADO BLVD, SUITE 200
CAPE CORAL, FLORIDA 33904
FBPE#3128 (239) 573-2077

LEE COUNTY DEPARTMENT OF TRANSPORTATION
(239) 533-8580

THREE OAKS PARKWAY EXTENSION
PHASE 1: FIDDLESTICKS CANAL TO STA 265+20
LEE COUNTY, FLORIDA

LAKE B - DETAIL PLAN
THREE OAKS PKWY EXT.

SHEET
46 of 110

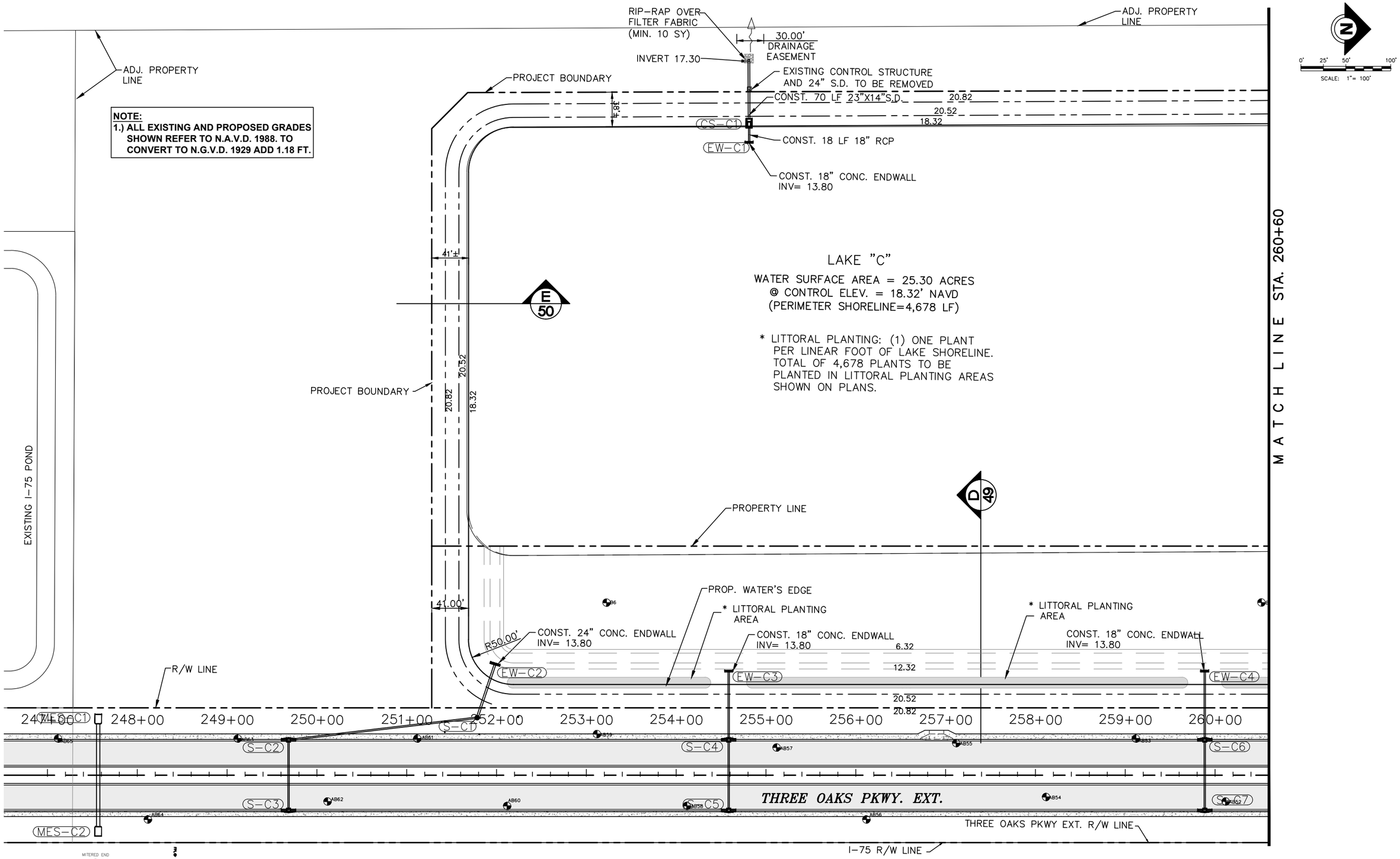

P:\CAD\2017\17-372\3-Oaks-Ph1\PLOT_PHASE1\LAKES.dwg, 47 LAKE C - SOUTH DETAIL PLAN, 4/29/2019 3:47:37 PM, Avalon Engineering Inc.

DATE	BY	REVISION DESCRIPTION

60% PLANS

AVALON PROJECT: 17-372
PROJ. MGR. Jack Schrager, PE, VP
LEE COUNTY DOT PROJECT: CN160642/ANB
LDOT PROJ. MGR. VINCENT MILLER

AVALON ENGINEERING, INC.
2503 DEL PRADO BLVD, SUITE 200
CAPE CORAL, FLORIDA 33904
FBPE#3128 (239) 573-2077

LEE COUNTY DEPARTMENT OF TRANSPORTATION
(239) 533-8580

THREE OAKS PARKWAY EXTENSION
PHASE 1: FIDDLESTICKS CANAL TO STA 265+20
LEE COUNTY, FLORIDA

LAKE C - SOUTH DETAIL PLAN
THREE OAKS PKWY EXT.

SHEET 47 of 110

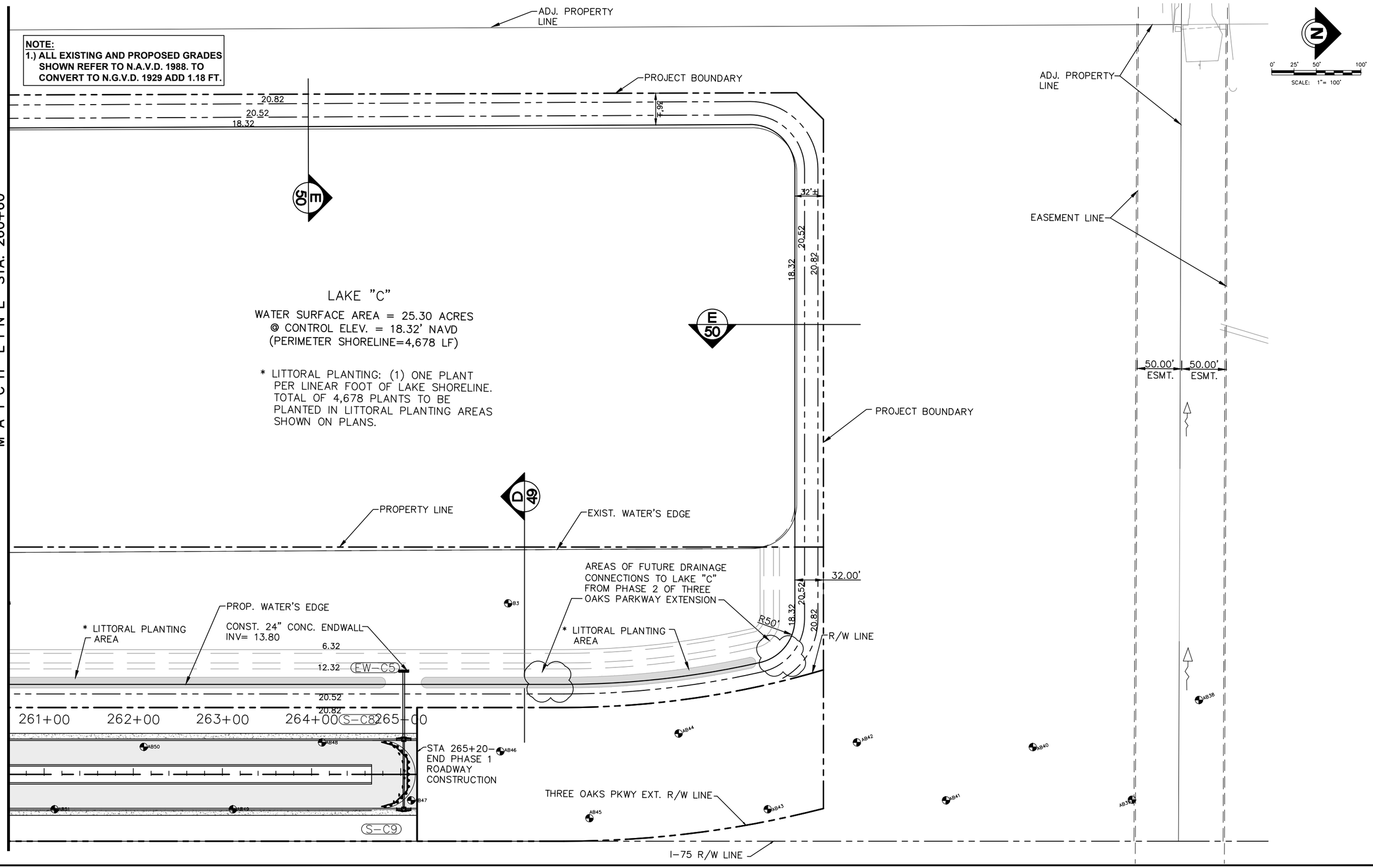

P:\CAD\2017\17-372\3-Oaks-Ph1\PLOT_PHASE1\LAKES.dwg, 48 LAKE C - NORTH DETAIL PLAN, 4/29/2019 3:47:42 PM, Avalon Engineering Inc.

DATE	BY	REVISION DESCRIPTION

60% PLANS

AVALON PROJECT: 17-372
PROJ. MGR. Jack Schrager, PE, VP
LEE COUNTY DOT PROJECT: CN160642/ANB
LDOT PROJ. MGR. VINCENT MILLER

AVALON ENGINEERING, INC.
2503 DEL PRADO BLVD, SUITE 200
CAPE CORAL, FLORIDA 33904
FBPE#3128 (239) 573-2077

LEE COUNTY DEPARTMENT OF TRANSPORTATION
(239) 533-8580

THREE OAKS PARKWAY EXTENSION
PHASE 1: FIDDLESTICKS CANAL TO STA 265+20
LEE COUNTY, FLORIDA

LAKE C - NORTH DETAIL PLAN
THREE OAKS PKWY EXT.

SHEET 48 of 110

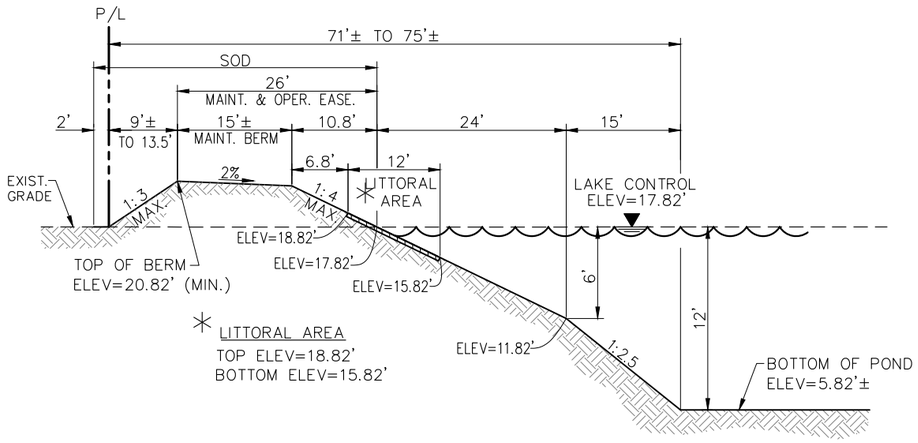

A 49 TYPICAL LAKE PERIMETER BERM DETAIL
(DETAIL PLAN SHEETS 45 & 46)
N.T.S.

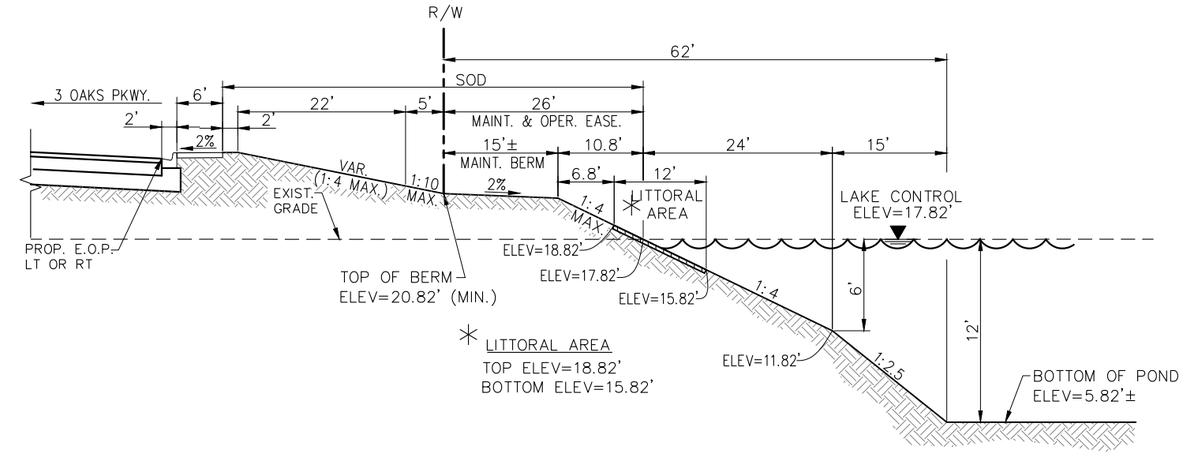

B 49 TYPICAL LAKE AND ROADWAY SIDE SLOPE DETAIL
(DETAIL PLAN SHEETS 45 & 46)
N.T.S.

* LITTORAL PLANTING: (1) ONE PLANT PER LINEAR FOOT OF LAKE SHORELINE. TO BE PLANTED IN LITTORAL PLANTING AREAS SHOWN ON PLANS.

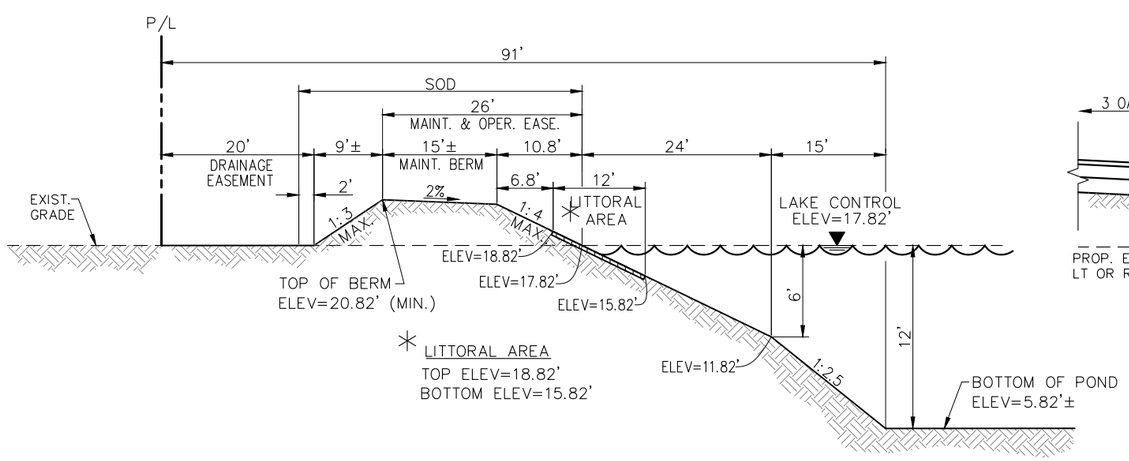

C 49 LAKE PERIMETER BERM DETAIL (W/20' DRAINAGE EASEMENT)
(DETAIL PLAN SHEET 46)
N.T.S.

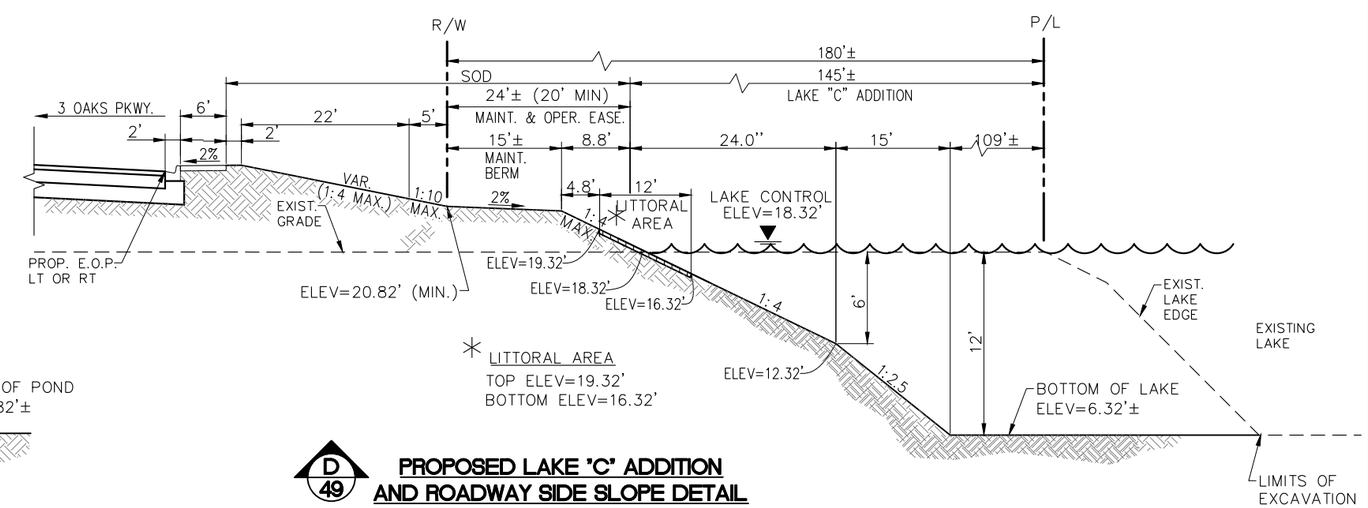

D 49 PROPOSED LAKE 'C' ADDITION AND ROADWAY SIDE SLOPE DETAIL
(DETAIL PLAN SHEET 47 AND 48)
N.T.S.

NOTE:
1.) ALL EXISTING AND PROPOSED GRADES SHOWN REFER TO N.A.V.D. 1988. TO CONVERT TO N.G.V.D. 1929 ADD 1.18 FT.

P:\CAD\2017\17-372\3-Oaks-Ph1\PLOT_PHASE1\LAKE-SEC.dwg, 49 LAKE SECTIONS, 4/29/2019 3:47:49 PM, Avalon Engineering Inc.

DATE	BY	REVISION DESCRIPTION

60% PLANS

AVALON PROJECT: 17-372
PROJ. MGR. Jack Schrager, PE, VP
LEE COUNTY DOT PROJECT: CN160642/ANB
LDOT PROJ. MGR. VINCENT MILLER

AVALON ENGINEERING, INC.
2503 DEL PRADO BLVD, SUITE 200
CAPE CORAL, FLORIDA 33904
FBPE#3128 (239) 573-2077

LEE COUNTY DEPARTMENT OF TRANSPORTATION
(239) 533-8580

THREE OAKS PARKWAY EXTENSION
PHASE 1: FIDDLESTICKS CANAL TO STA 265+20
LEE COUNTY, FLORIDA

LAKE SECTIONS
THREE OAKS PKWY EXT.

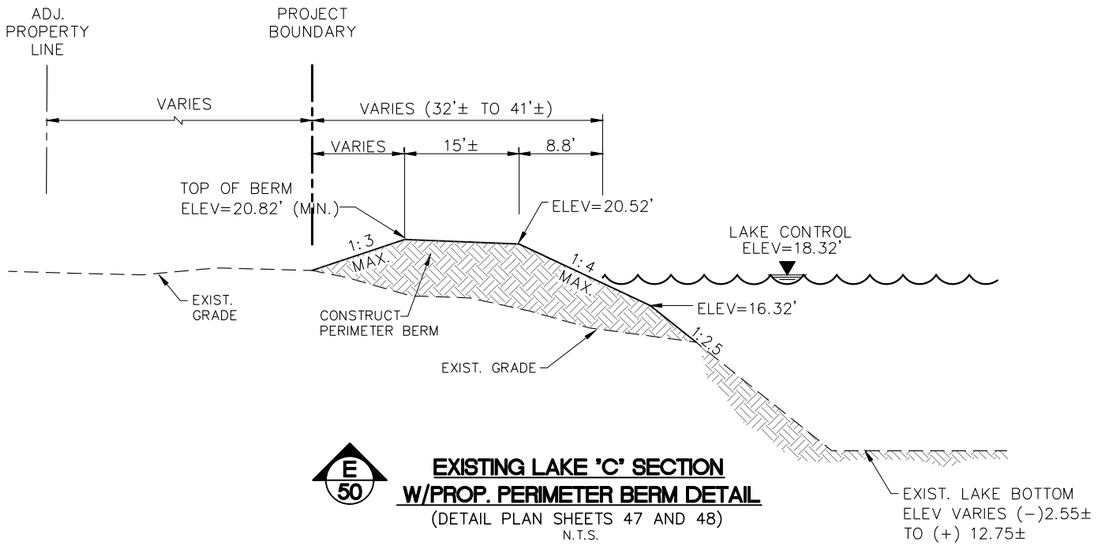

E 50

EXISTING LAKE 'C' SECTION W/PROP. PERIMETER BERM DETAIL

(DETAIL PLAN SHEETS 47 AND 48)

N.T.S.

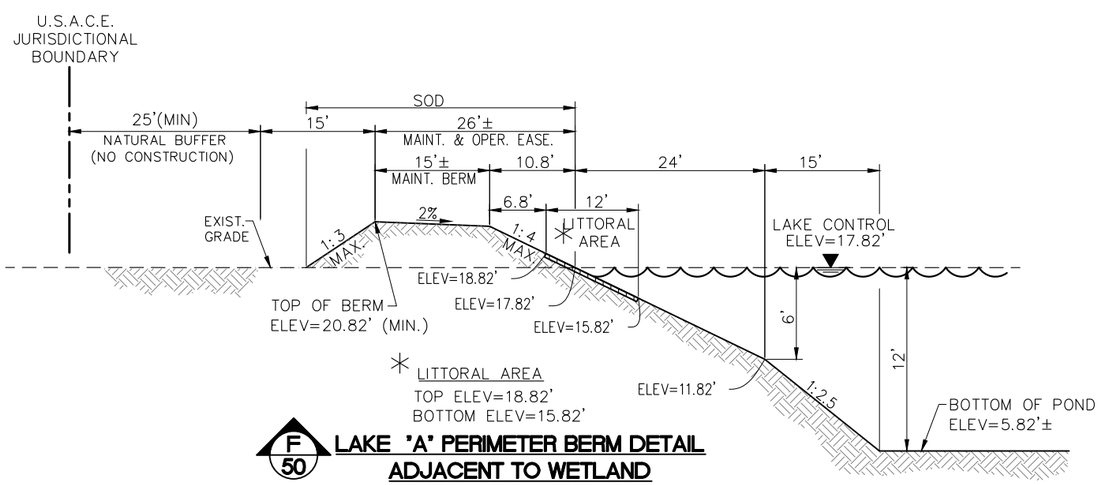

F 50

LAKE 'A' PERIMETER BERM DETAIL ADJACENT TO WETLAND

(DETAIL PLAN SHEET 45)

N.T.S.

NOTE:
1.) ALL EXISTING AND PROPOSED GRADES SHOWN REFER TO N.A.V.D. 1988. TO CONVERT TO N.G.V.D. 1929 ADD 1.18 FT.

P:\CAD\2017\17-372\3-Oaks-Ph1\PLOT_PHASE1\LAKE-SEC.dwg, 50 LAKE SECTIONS, 4/29/2019 3:47:51 PM, Avalon Engineering Inc.

DATE	BY	REVISION DESCRIPTION

60% PLANS

AVALON PROJECT: 17-372
PROJ. MGR. Jack Schrager, PE, VP
LEE COUNTY DOT PROJECT: CN160642/ANB
LDOT PROJ. MGR. VINCENT MILLER

AVALON ENGINEERING, INC.
2503 DEL PRADO BLVD, SUITE 200
CAPE CORAL, FLORIDA 33904
FBPE#3128 (239) 573-2077

LEE COUNTY DEPARTMENT OF TRANSPORTATION
(239) 533-8580

THREE OAKS PARKWAY EXTENSION
PHASE 1: FIDDLESTICKS CANAL TO STA 265+20
LEE COUNTY, FLORIDA

LAKE SECTIONS
THREE OAKS PKWY EXT.

SHEET 50 of 110

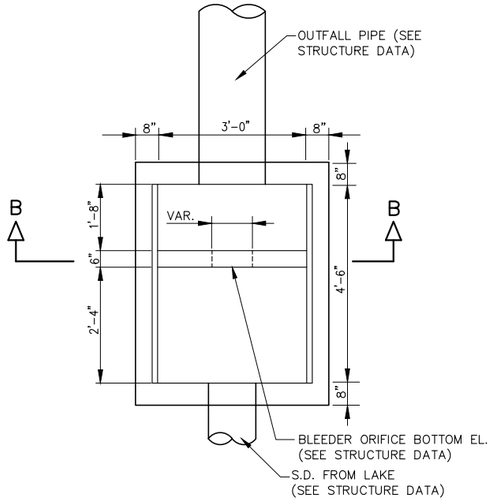

PLAN VIEW

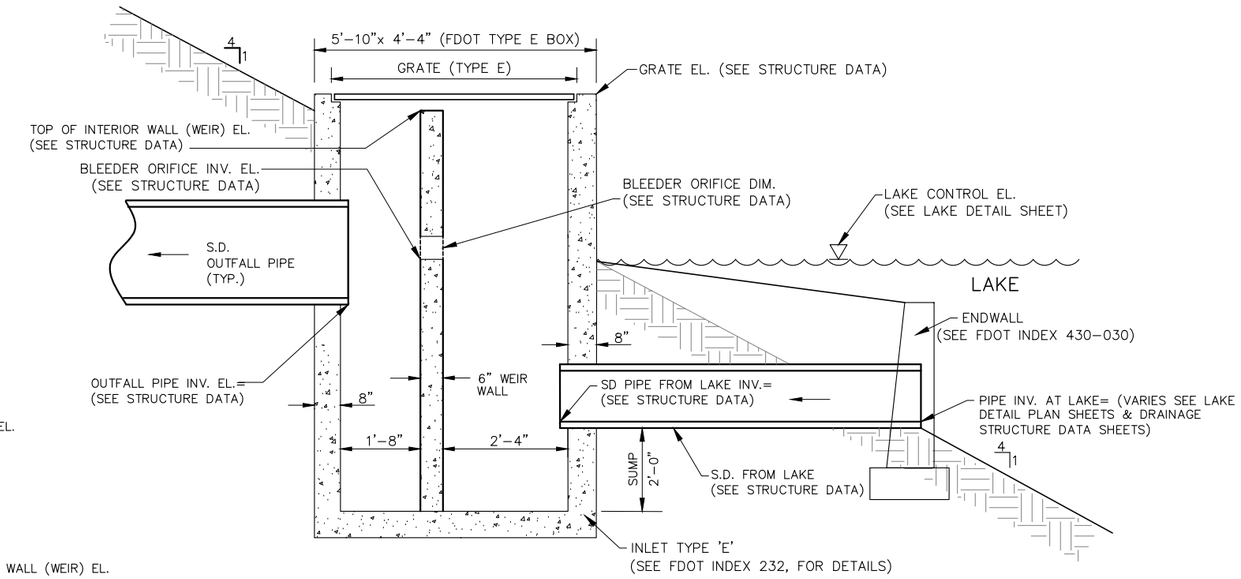

TYPICAL CROSS SECTION AT LAKE

N.T.S.

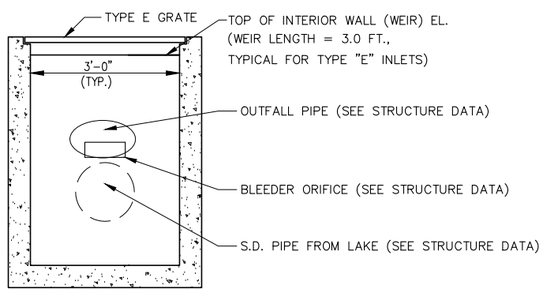

SECTION BB

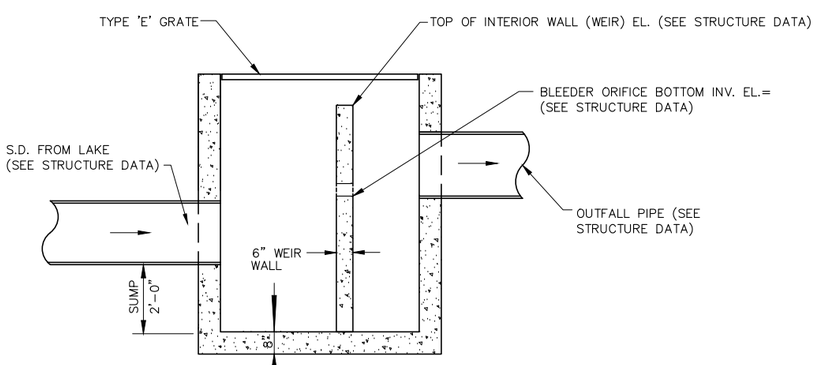

SECTION AA

STRUCTURE BOTTOM FDOT TYPE E

CONTROL STRUCTURE DETAIL

N.T.S.

CONTROL STRUCTURES AT LAKES "A", "B", "C"

(LAKE DETAIL PLAN DETAIL SHEETS 45-48)

CS-A1

STA: 161+54.38 (376.30'R)
CONST. INLET TYPE "E" MODIFIED
FDOT INDEX #425-052
GRATE = 20.87
TOP OF WALL (WEIR) EL. = 20.37
RECT. NOTCH 0.25'H X 0.88'W
RECT. NOTCH INVERT EL. = 17.82
SUMP = 12.30
INV IN (N)=14.30 (PROP 18" RCP)
INV OUT (S)=14.80 (PROP 23"x14" ERCP)

CS-B1

STA: 221+21.42 (-710.21'L)
CONST. INLET TYPE "E" MODIFIED
FDOT INDEX #425-052
GRATE = 21.07
TOP OF WALL (WEIR) EL. = 20.57
RECT. NOTCH 0.25'H X 0.80'W
RECT. NOTCH INVERT EL. = 17.82
SUMP = 12.30
INV IN (N)=14.30 (18" RCP)
INV OUT (S)=17.55 (PROP 23"x14" ERCP)

CS-C1

STA: 254+82.75 724.64'LT
CONST. INLET TYPE "E" MODIFIED
FDOT INDEX #425-052
GRATE = 20.57
TOP OF WALL (WEIR) EL. = 19.57
RECT. NOTCH 0.42'H X 1.25'W
RECT. NOTCH INVERT EL. = 18.32
SUMP = 12.30
INV IN (E)=14.30 (PROP 18" RCP)
INV OUT (W)=17.75 (PROP 23"x14" ERCP)

P:\CAD\2017\17-372\3-Oaks-Ph1\PLOT_PHASE1\DTLS-DRAINAGE&MISC.dwg, 51 CONTROL STRUCTURE AND, 4/29/2019 3:47:58 PM, Avalon Engineering Inc.

DATE	BY	REVISION DESCRIPTION

60% PLANS

AVALON PROJECT: 17-372
PROJ. MGR. Jack Schrager, PE, VP
LEE COUNTY DOT PROJECT: CN160642/ANB
LDOT PROJ. MGR. VINCENT MILLER

AVALON ENGINEERING, INC.
2503 DEL PRADO BLVD, SUITE 200
CAPE CORAL, FLORIDA 33904
FBPE#3128 (239) 573-2077

LEE COUNTY DEPARTMENT OF TRANSPORTATION
(239) 533-8580

THREE OAKS PARKWAY EXTENSION
PHASE 1: FIDDLESTICKS CANAL TO STA 265+20
LEE COUNTY, FLORIDA

CONTROL STRUCTURE AND DRAINAGE DETAILS

DATE OF SURVEY : 3/18/02 - 6/14/02
SURVEY MADE BY : UNIVERSAL ENGINEERING SCIENCES, INC.
SUBMITTED BY : LINDSEY WEAVER, P.E.

SOIL SURVEY FOR ROADWAY ALIGNMENT
THREE OAKS PARKWAY EXTENSION
LEE COUNTY, FLORIDA

ORGANIC CONTENT				SIEVE ANALYSIS RESULTS (% PASS)						ATTERBERG LIMITS (%)					CORROSION TEST RESULTS				
STRATUM NO.	NO. OF TEST	% ORGANIC	MOISTURE CONTENT	NO. OF TEST	10 MESH	40 MESH	60 MESH	100 MESH	200 MESH	NO. OF TEST	LIQUID LIMITS	PLASTIC INDEX	AASHTO GROUP	DESCRIPTION	NO. OF TEST	RESISTIVITY ohms om	CHLORIDE ppm	SULFATES ppm	pH
1	6	-	5 - 24	6	100	97 - 100	76 - 96	28 - 94	1 - 4	-	-	-	A-3	FINE SAND WITH VARYING AMOUNTS OF ROOTS AND ROCKS .	3	17,000 - 52,000	45 - 60	5	5.8 - 8.3
2	11	-	13 - 53	11	60 - 100	24 - 97	22 - 98	15 - 94	5 - 10	-	-	-	A-3 A-2-4 A-2-6	FINE SAND WITH SILT OR CLAY AND VARYING AMOUNTS OF ROCK AND ROOTS.	-	-	-	-	-
3	2	-	13 - 15	2	47 - 53	34 - 41	29 - 35	24 - 46	18	-	-	-	A-2-4	SILTY FINE SAND WITH LIMEROCK.	-	-	-	-	-
4	1	-	25	1	100	97	87	36	20	-	-	-	A-2-6	CLAYEY FINE SAND WITH VARYING AMOUNTS OF ROCK.	-	-	-	-	-
5	-	-	-	-	-	-	-	-	-	-	-	-	-	MEDIUM TO HARD LIMESTONE ROCK	-	-	-	-	-

EMBANKMENT AND SUBGRADE MATERIAL

STRATA BOUNDARIES ARE APPROXIMATE, MAKE FINAL CHECK AFTER GRADING
WATER TABLE ENCOUNTERED IN ALL STRATA

SOIL BORING PROFILE LEGEND

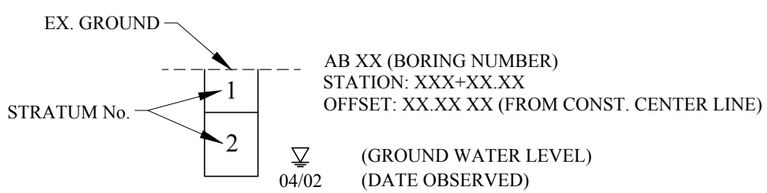

- REFER TO ROADWAY CROSS SECTIONS SHEET FOR LOCATION.
- REFER TO UNIVERSAL ENGINEERING SCIENCES GEOTECHNICAL REPORT FOR ADDITIONAL SOILS INFORMATION.

THE MATERIAL FROM STRATA NUMBER 1 AND 2 APPEARS SATISFACTORY FOR USE IN THE EMBANKMENT WHEN UTILIZED IN ACCORDANCE WITH INDEX 505. SOME OVERSIZED ROCK PARTICLES (3" AND GREATER) MAY BE PRESENT IN THE MATERIAL EXCAVATED FROM THESE STRATA AND WILL HAVE TO BE REMOVED DURING PLACEMENT.

THE MATERIAL FROM STRATUM NUMBER 3 APPEARS SATISFACTORY FOR USE IN THE EMBANKMENT WHEN UTILIZED IN ACCORDANCE WITH INDEX 505. HOWEVER, THIS MATERIAL IS LIKELY TO RETAIN EXCESS MOISTURE AND MAY BE DIFFICULT TO DRY AND COMPACT. IT SHOULD BE USE IN THE EMBANKMENT ABOVE THE WATER LEVEL EXISTING AT THE TIME OF CONSTRUCTION.

THE MATERIAL FROM STRATUM NUMBER 4 ARE CLAYEY, A-2-6 MATERIAL AND SHALL BE USED IN ACCORDANCE WITH INDEX 505.

THE MATERIAL FROM STRATUM NUMBER 5 IS CONTINUOUS CAP ROCK, LENSES OF ROCK OR BOULDERS. DIFFICULTY MAY BE ENCOUNTERED IN EXCAVATING THIS MATERICAL. EXCAVATED MATERIAL WILL LIKELY BE IN THE FORM OF LARGE BOULDERS WHICH WILL NOT BE SUITABLE FOR ROADWAY EMBANKMENT.

P:\CAD\2017\17-372\3-Oaks-Ph1\PLOT_PHASE1\SOIL.dwg, 52 ROADWAY SOIL SURVEY, 4/29/2019 3:48:04 PM, Avalon Engineering Inc.

NOTE:
1.) ALL EXISTING AND PROPOSED GRADES SHOWN REFER TO N.A.V.D. 1988. TO CONVERT TO N.G.V.D. 1929 ADD 1.18 FT.

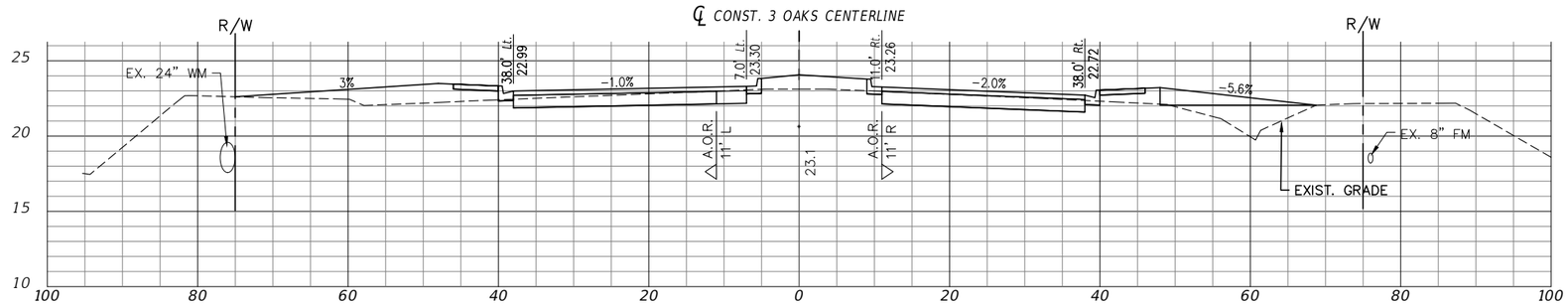

157+00.00

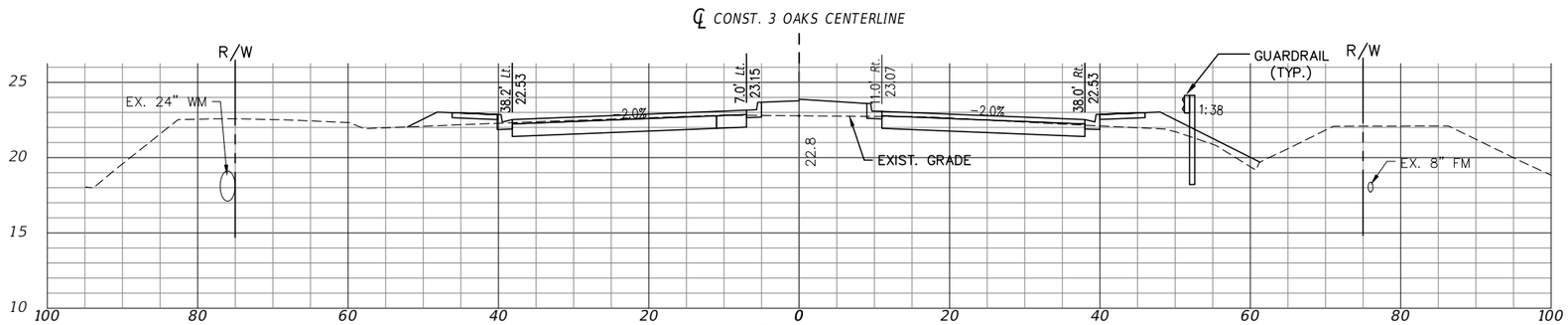

156+61.94

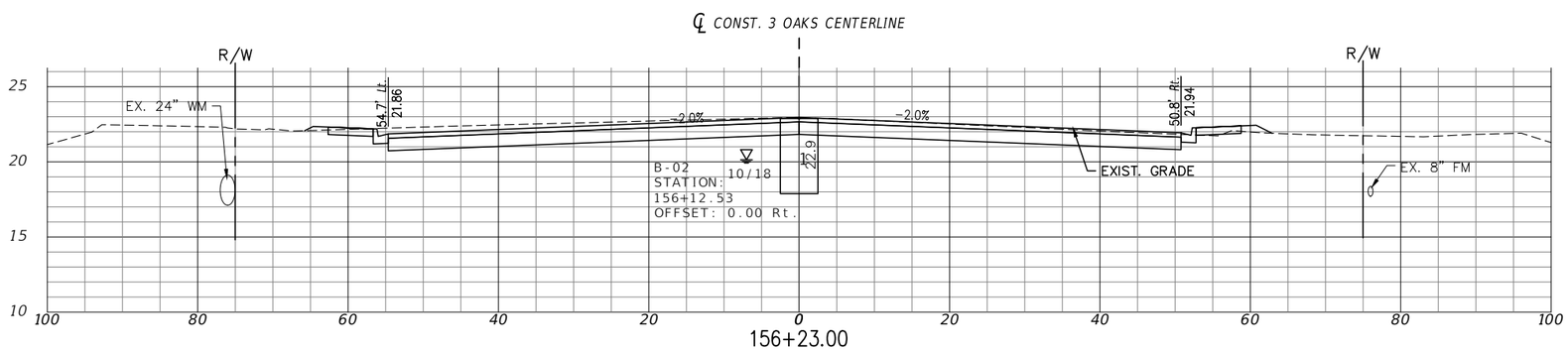

156+23.00

EXC		EMB	
A	V	A	V
68	165	34	77
53	79	36	28
57	0	2	0

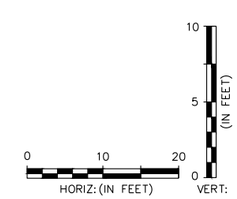

P:\CAD\2017\17-372\3-Oaks-Ph1\PLOT_PHASE1\THREE OAKS XSECT_A.dwg, 53 ROADWAY CROSS SECTION, 4/29/2019 3:49:10 PM, Avalon Engineering Inc.

DATE	BY	REVISION DESCRIPTION

AVALON PROJECT: 17-372
PROJ. MGR. Jack Schrager, PE, VP
LEE COUNTY DOT PROJECT: CN160642/ANB
LDOT PROJ. MGR. VINCENT MILLER

AVALON ENGINEERING, INC.
2503 DEL PRADO BLVD, SUITE 200
CAPE CORAL, FLORIDA 33904
FBPE#3128 (239) 573-2077

LEE COUNTY DEPARTMENT OF TRANSPORTATION
(239) 533-8580

THREE OAKS PARKWAY EXTENSION
PHASE 1: FIDDLESTICKS CANAL TO STA 265+20
LEE COUNTY, FLORIDA

ROADWAY CROSS SECTION
THREE OAKS PKWY EXT.

NOTE:
1.) ALL EXISTING AND PROPOSED GRADES SHOWN REFER TO N.A.V.D. 1988. TO CONVERT TO N.G.V.D. 1929 ADD 1.18 FT.

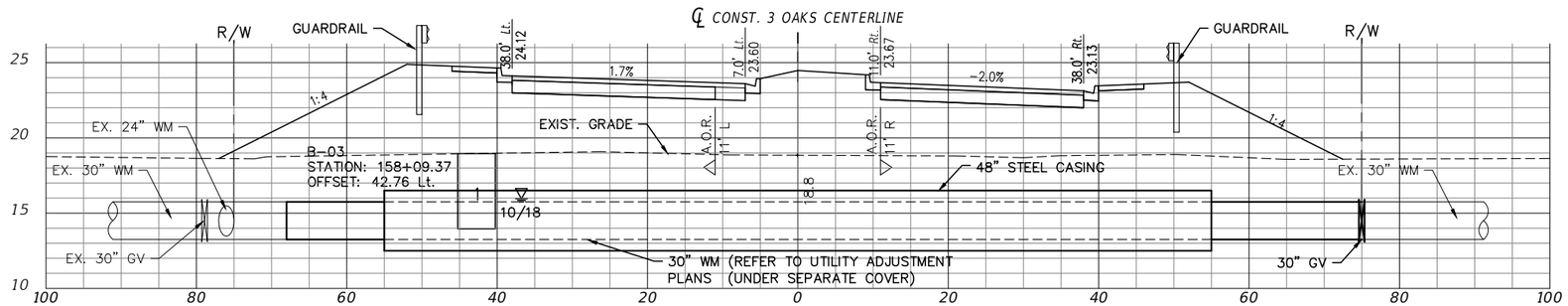

158+00.00

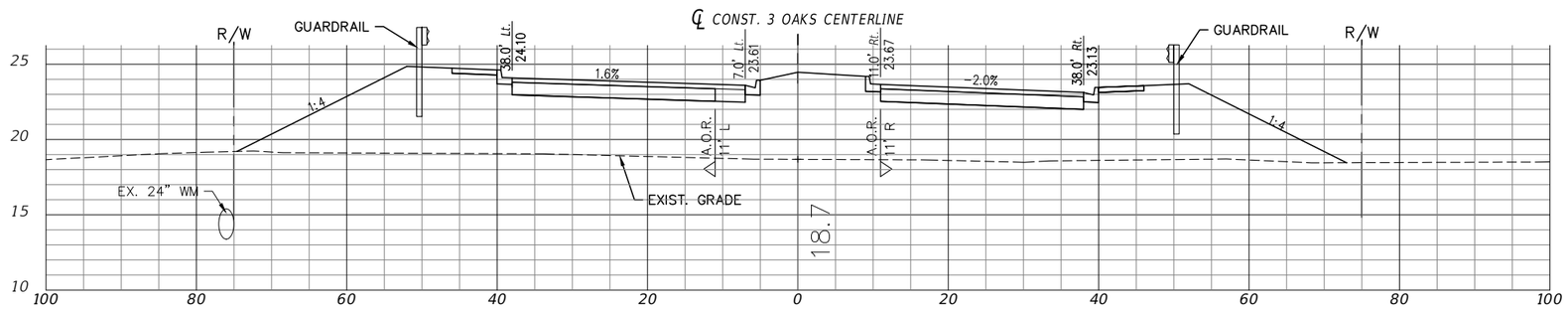

157+96.94

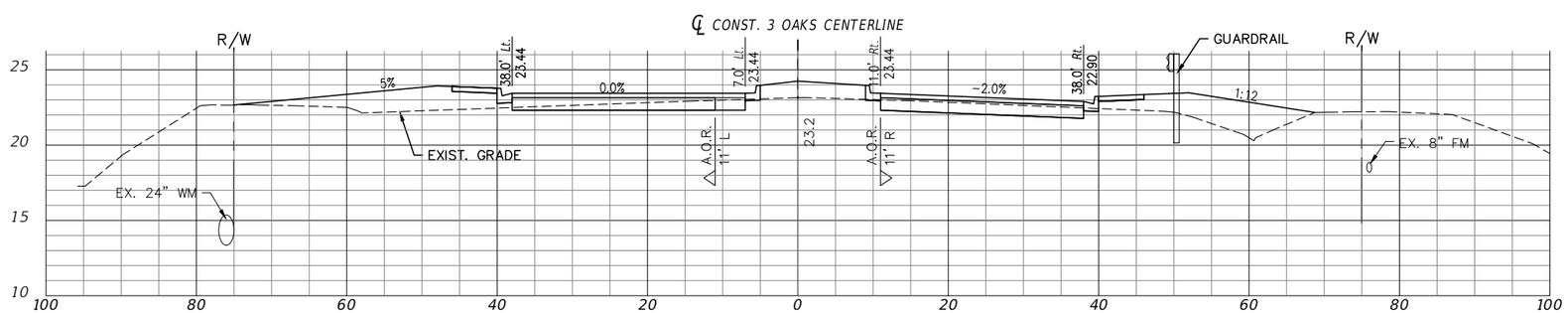

157+36.94

EXC		EMB	
A	V	A	V
0	374	519	831
0	374	534	771
91	274	43	129

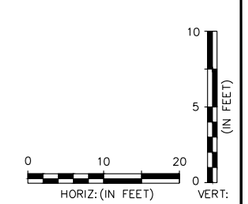

P:\CAD\2017\17-372\3-Oaks-Ph1\PLOT_PHASE1\THREE OAKS XSECT_A.dwg, 54 ROADWAY CROSS SECTION, 4/29/2019 3:49:45 PM, Avalon Engineering Inc.

DATE	BY	REVISION DESCRIPTION

AVALON PROJECT: 17-372
PROJ. MGR. Jack Schrager, PE, VP
LEE COUNTY DOT PROJECT: CN160642/ANB
LDOT PROJ. MGR. VINCENT MILLER

AVALON ENGINEERING, INC.
2503 DEL PRADO BLVD, SUITE 200
CAPE CORAL, FLORIDA 33904
FBPE#3128 (239) 573-2077

LEE COUNTY DEPARTMENT OF TRANSPORTATION
(239) 533-8580

THREE OAKS PARKWAY EXTENSION
PHASE 1: FIDDLESTICKS CANAL TO STA 265+20
LEE COUNTY, FLORIDA

ROADWAY CROSS SECTION
THREE OAKS PKWY EXT.

SHEET
54 of 110

NOTE:
1.) ALL EXISTING AND PROPOSED GRADES SHOWN REFER TO N.A.V.D. 1988. TO CONVERT TO N.G.V.D. 1929 ADD 1.18 FT.

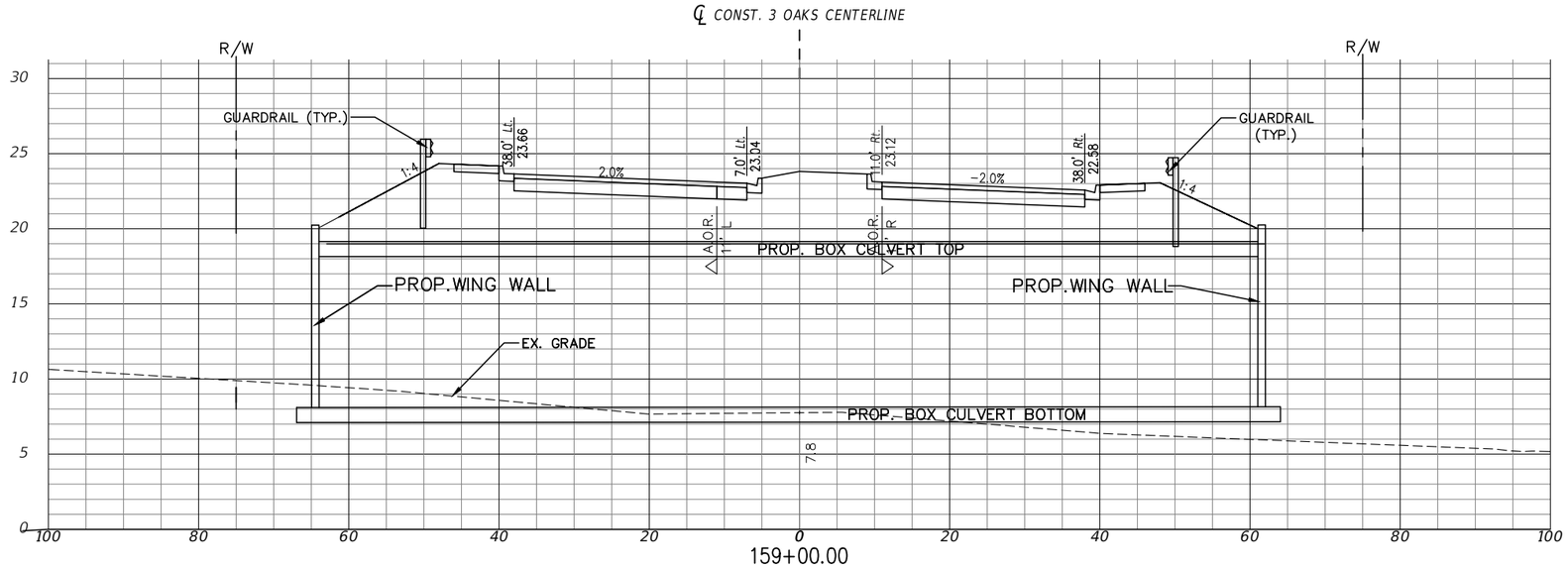

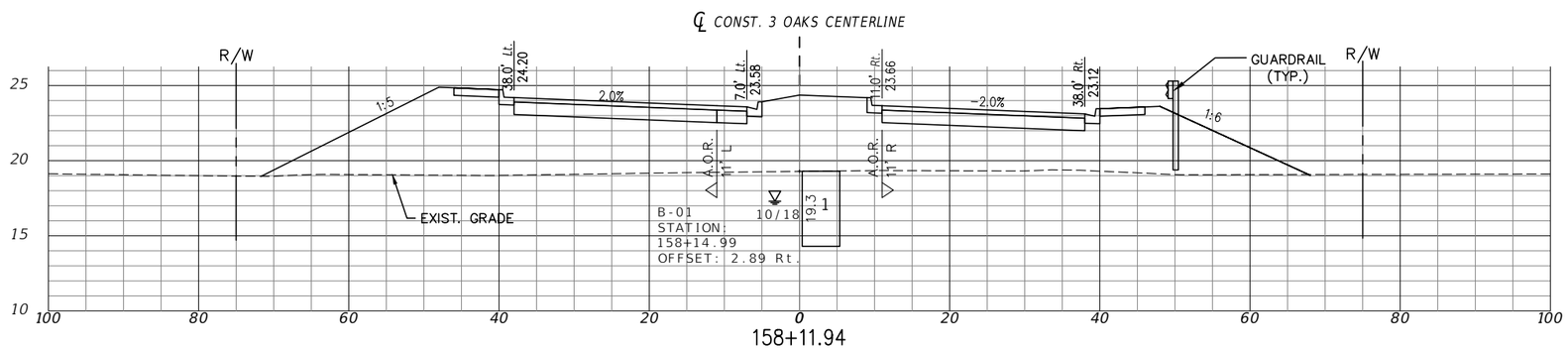

EXC		EMB	
A	V	A	V
0	378	1822	4813
2	375	484	1052

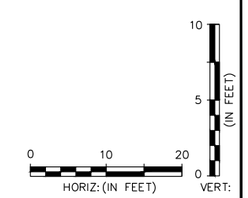

P:\CAD\2017\17-372\3-Oaks-Ph1\PLOT_PHASE1\THREE OAKS XSECT_A.dwg, 55 ROADWAY CROSS SECTION, 4/29/2019 3:50:13 PM, Avalon Engineering Inc.

DATE	BY	REVISION DESCRIPTION

AVALON PROJECT: 17-372
PROJ. MGR. Jack Schrager, PE, VP
LEE COUNTY DOT PROJECT: CN160642/ANB
LDOT PROJ. MGR. VINCENT MILLER

AVALON ENGINEERING, INC.
2503 DEL PRADO BLVD, SUITE 200
CAPE CORAL, FLORIDA 33904
FBPE#3128 (239) 573-2077

LEE COUNTY DEPARTMENT OF TRANSPORTATION
(239) 533-8580

THREE OAKS PARKWAY EXTENSION
PHASE 1: FIDDLESTICKS CANAL TO STA 265+20
LEE COUNTY, FLORIDA

ROADWAY CROSS SECTION
THREE OAKS PKWY EXT.

NOTE:
1.) ALL EXISTING AND PROPOSED GRADES SHOWN REFER TO N.A.V.D. 1988. TO CONVERT TO N.G.V.D. 1929 ADD 1.18 FT.

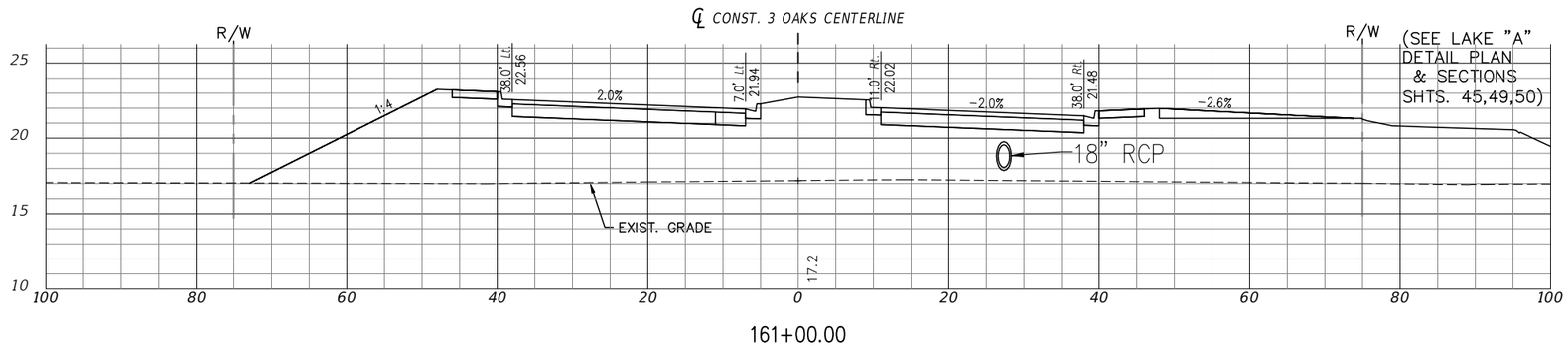

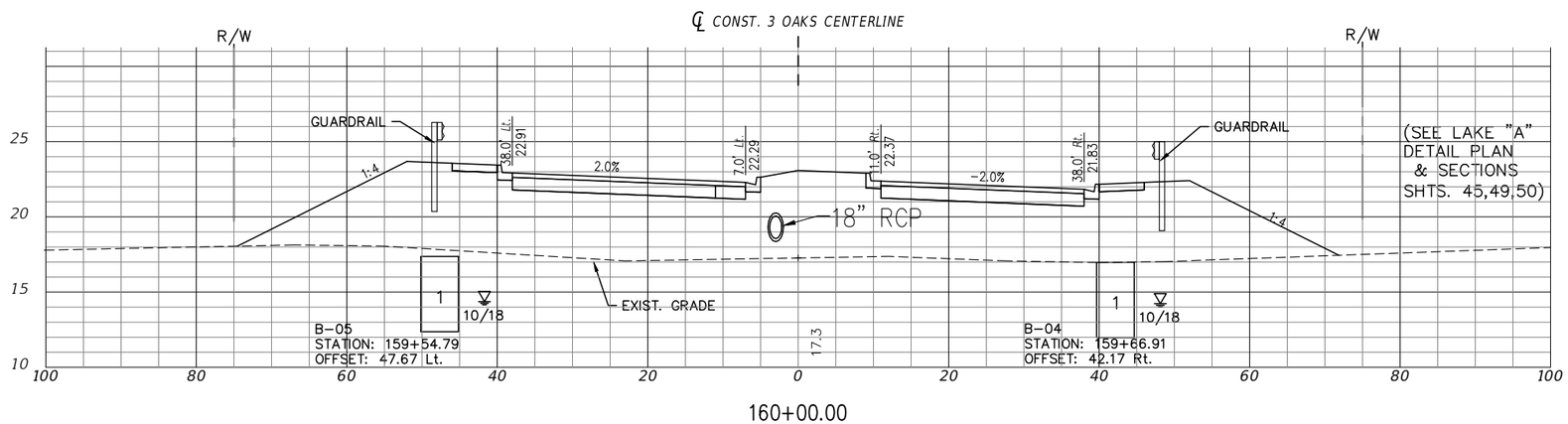

EXC		EMB	
A	V	A	V
0	378	612	11455
0	378	576	9254

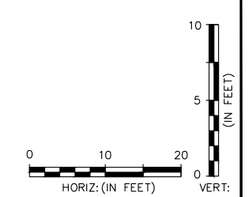

P:\CAD\2017\17-372\3-Oaks-Ph1\PLOT_PHASE1\THREE OAKS XSECT_A.dwg, 56 ROADWAY CROSS SECTION, 4/29/2019 3:50:34 PM, Avalon Engineering Inc.

DATE	BY	REVISION DESCRIPTION

AVALON PROJECT: 17-372
PROJ. MGR. Jack Schrager, PE, VP
LEE COUNTY DOT PROJECT: CN160642/ANB
LDOT PROJ. MGR. VINCENT MILLER

AVALON ENGINEERING, INC.
2503 DEL PRADO BLVD, SUITE 200
CAPE CORAL, FLORIDA 33904
FBPE#3128 (239) 573-2077

LEE COUNTY DEPARTMENT OF TRANSPORTATION
(239) 533-8580

THREE OAKS PARKWAY EXTENSION
PHASE 1: FIDDLESTICKS CANAL TO STA 265+20
LEE COUNTY, FLORIDA

ROADWAY CROSS SECTION
THREE OAKS PKWY EXT.

SHEET 56 OF 110

NOTE:
1.) ALL EXISTING AND PROPOSED GRADES SHOWN REFER TO N.A.V.D. 1988. TO CONVERT TO N.G.V.D. 1929 ADD 1.18 FT.

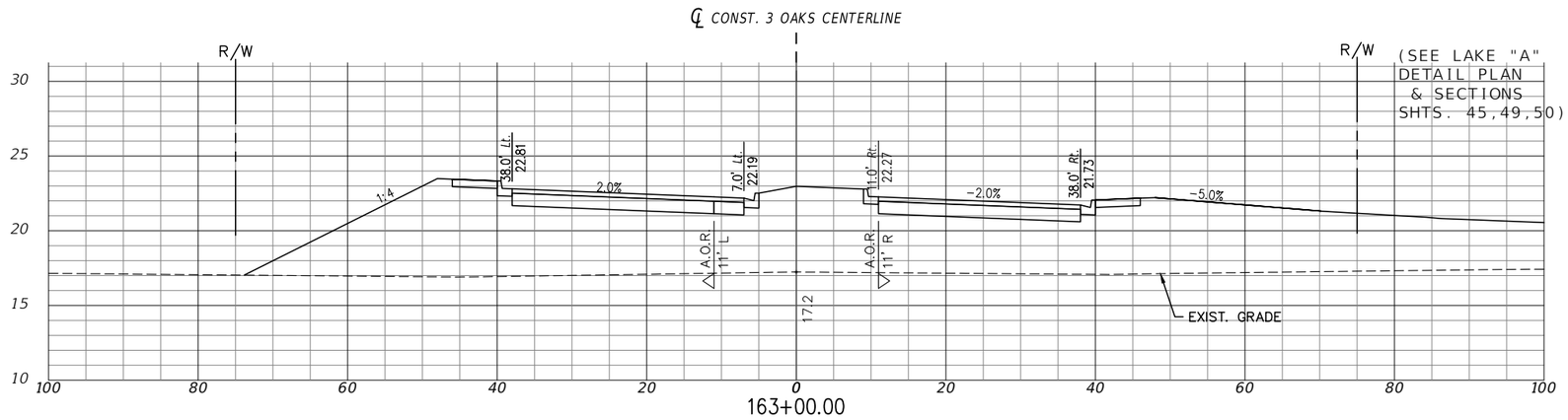

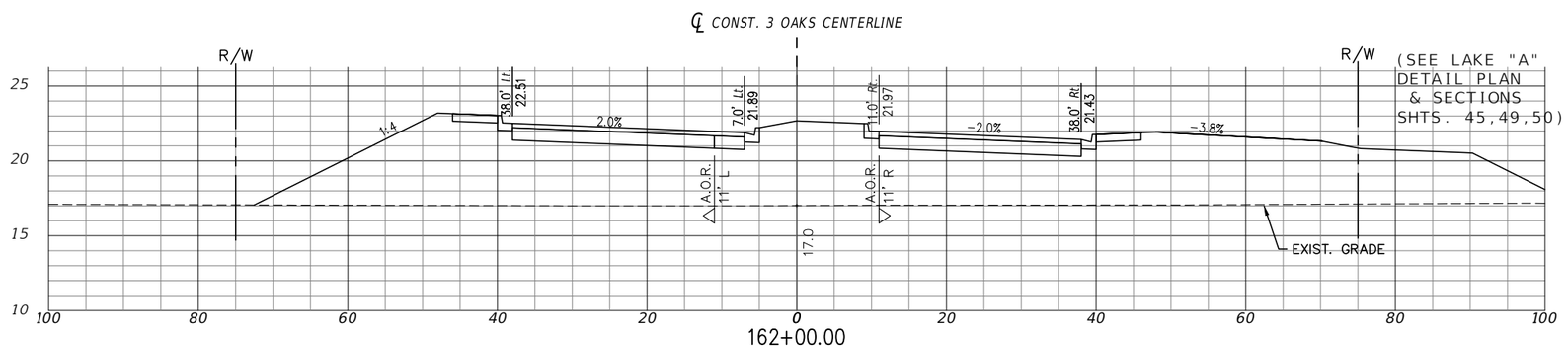

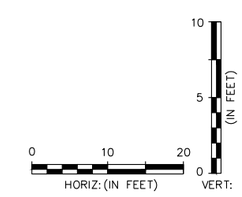

EXC		EMB	
A	V	A	V
0	378	629	15962
0	378	598	13692

P:\CAD\2017\17-372\3-Oaks-Ph1\PLOT_PHASE1\THREE OAKS XSECT_A.dwg, 57 ROADWAY CROSS SECTION, 4/29/2019 3:50:59 PM, Avalon Engineering Inc.

DATE	BY	REVISION DESCRIPTION

AVALON PROJECT: 17-372
PROJ. MGR. Jack Schrager, PE, VP
LEE COUNTY DOT PROJECT: CN160642/ANB
LDOT PROJ. MGR. VINCENT MILLER

AVALON ENGINEERING, INC.
2503 DEL PRADO BLVD, SUITE 200
CAPE CORAL, FLORIDA 33904
FBPE#3128 (239) 573-2077

LEE COUNTY DEPARTMENT OF TRANSPORTATION
(239) 533-8580

THREE OAKS PARKWAY EXTENSION
PHASE 1: FIDDLESTICKS CANAL TO STA 265+20
LEE COUNTY, FLORIDA

ROADWAY CROSS SECTION
THREE OAKS PKWY EXT.

SHEET 57 OF 110

NOTE:
1.) ALL EXISTING AND PROPOSED GRADES SHOWN REFER TO N.A.V.D. 1988. TO CONVERT TO N.G.V.D. 1929 ADD 1.18 FT.

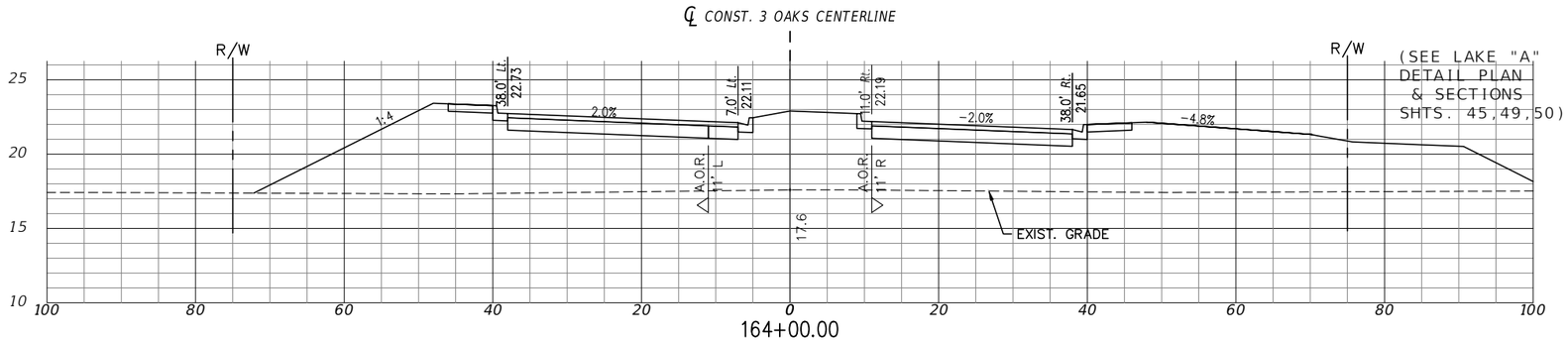

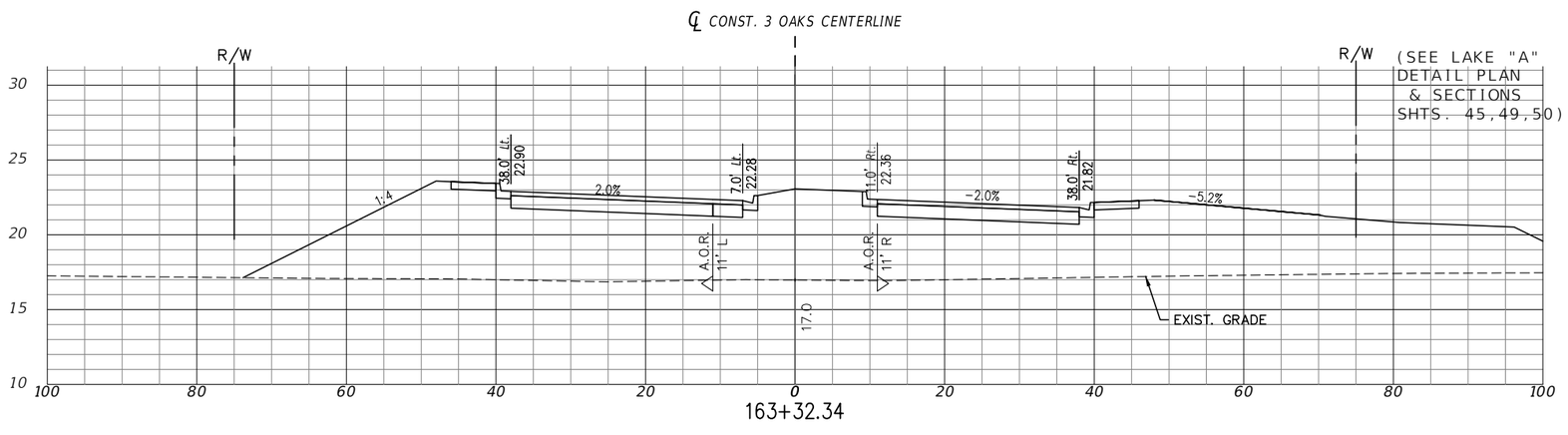

EXC		EMB	
A	V	A	V
0	378	568	18250
0	378	648	16727

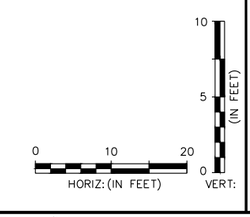

P:\CAD\2017\17-372\3-Oaks-Ph1\PLOT_PHASE1\THREE OAKS XSECT_A.dwg, 58 ROADWAY CROSS SECTION, 4/29/2019 3:51:19 PM, Avalon Engineering Inc.

DATE	BY	REVISION DESCRIPTION

AVALON PROJECT: 17-372
PROJ. MGR. Jack Schrager, PE, VP
LEE COUNTY DOT PROJECT: CN160642/ANB
LDOT PROJ. MGR. VINCENT MILLER

AVALON ENGINEERING, INC.
2503 DEL PRADO BLVD, SUITE 200
CAPE CORAL, FLORIDA 33904
FBPE#3128 (239) 573-2077

LEE COUNTY DEPARTMENT OF TRANSPORTATION
(239) 533-8580

THREE OAKS PARKWAY EXTENSION
PHASE 1: FIDDLESTICKS CANAL TO STA 265+20
LEE COUNTY, FLORIDA

ROADWAY CROSS SECTION
THREE OAKS PKWY EXT.

NOTE:
1.) ALL EXISTING AND PROPOSED GRADES SHOWN REFER TO N.A.V.D. 1988. TO CONVERT TO N.G.V.D. 1929 ADD 1.18 FT.

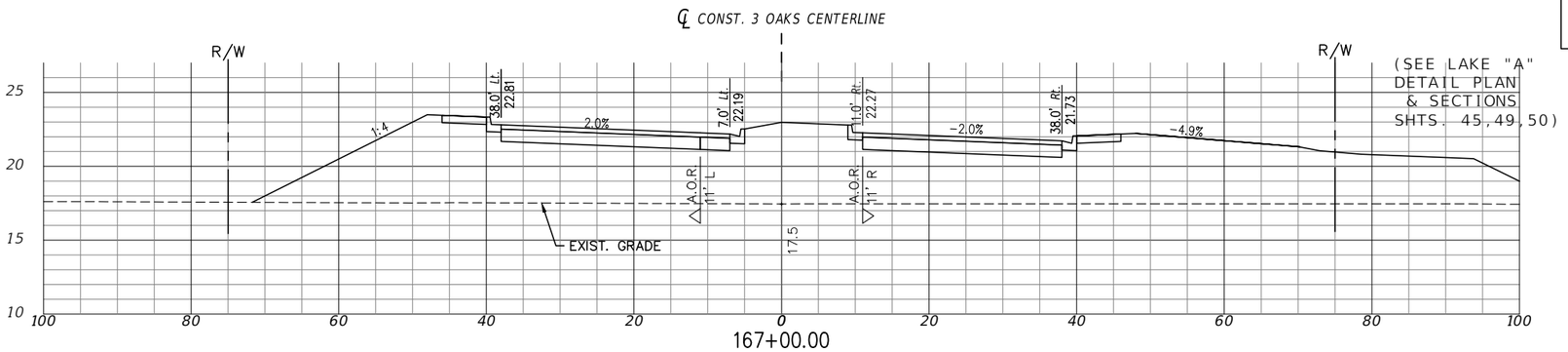

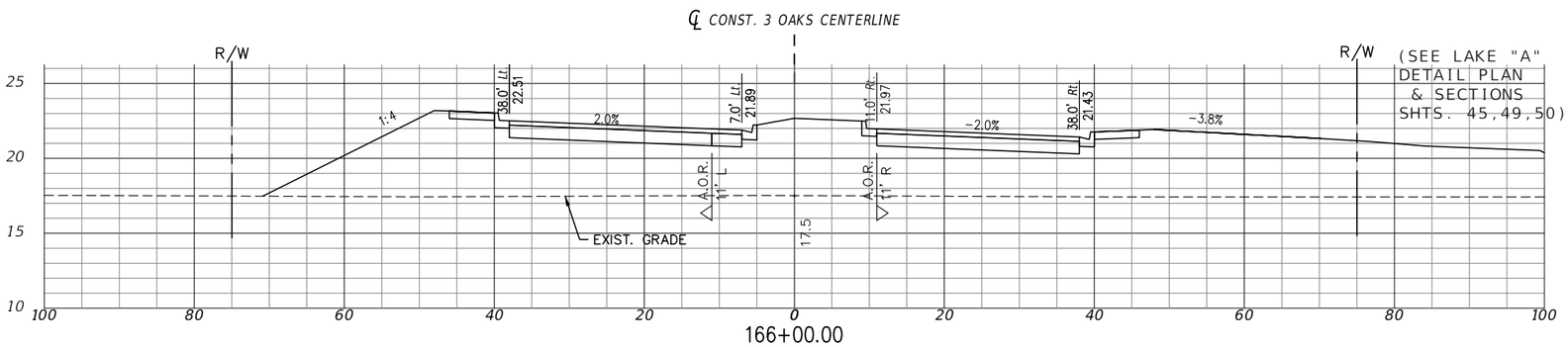

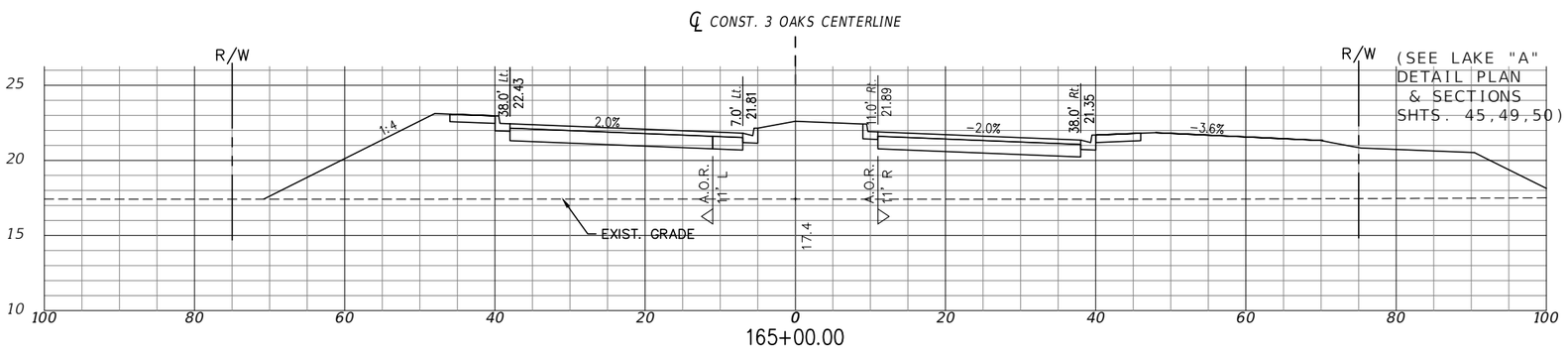

EXC		EMB	
A	V	A	V
0	378	574	24326
0	378	538	22270
0	378	534	20288

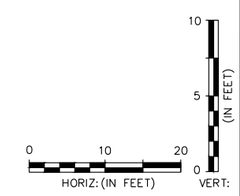

P:\CAD\2017\17-372\3-Oaks-Ph1\PLOT_PHASE1\THREE OAKS XSECT_A.dwg, 59 ROADWAY CROSS SECTION, 4/29/2019 3:51:39 PM, Avalon Engineering Inc.

DATE	BY	REVISION DESCRIPTION

AVALON PROJECT: 17-372
PROJ. MGR. Jack Schrager, PE, VP
LEE COUNTY DOT PROJECT: CN160642/ANB
LDOT PROJ. MGR. VINCENT MILLER

AVALON ENGINEERING, INC.
2503 DEL PRADO BLVD, SUITE 200
CAPE CORAL, FLORIDA 33904
FBPE#3128 (239) 573-2077

LEE COUNTY DEPARTMENT OF TRANSPORTATION
(239) 533-8580

THREE OAKS PARKWAY EXTENSION
PHASE 1: FIDDLESTICKS CANAL TO STA 265+20
LEE COUNTY, FLORIDA

ROADWAY CROSS SECTION
THREE OAKS PKWY EXT.

SHEET 59 OF 110

NOTE:
1.) ALL EXISTING AND PROPOSED GRADES SHOWN REFER TO N.A.V.D. 1988. TO CONVERT TO N.G.V.D. 1929 ADD 1.18 FT.

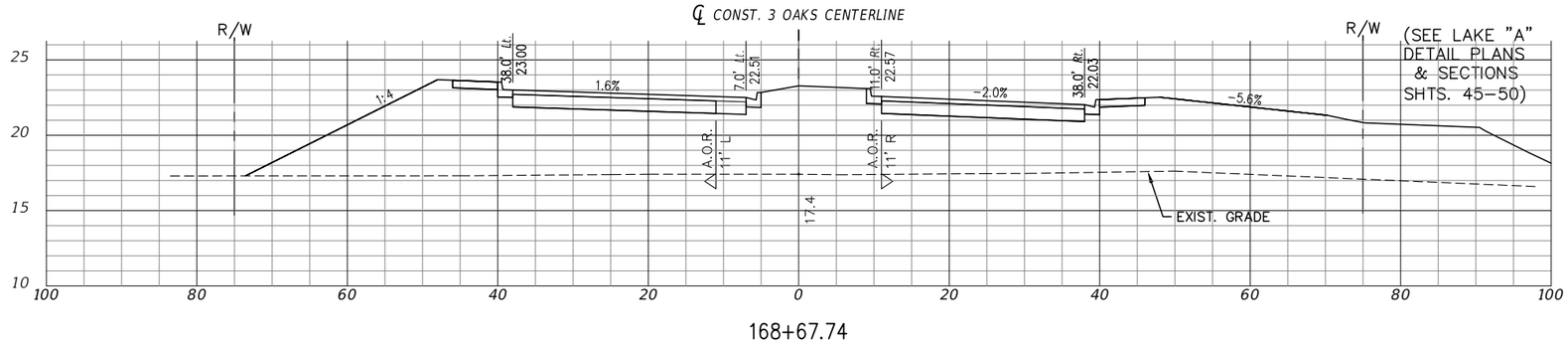

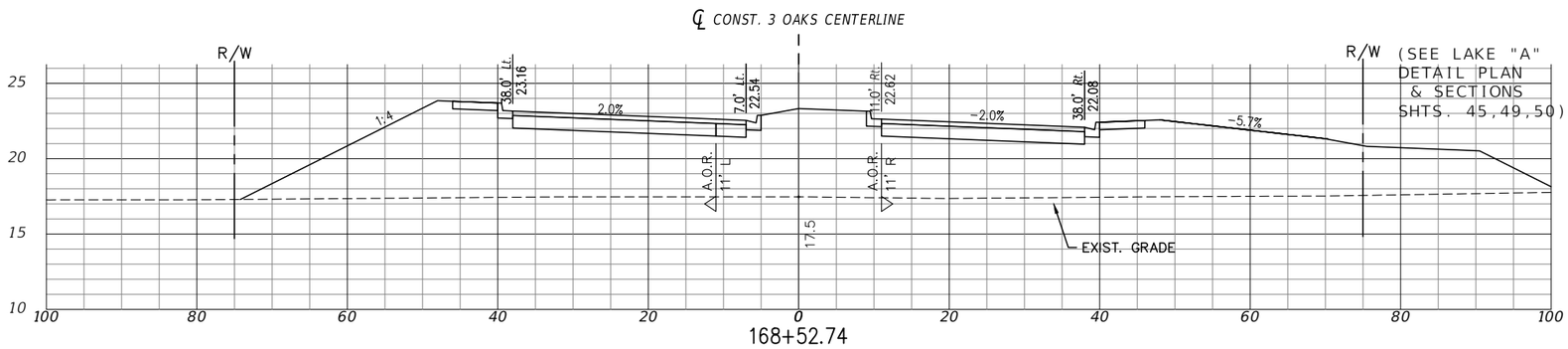

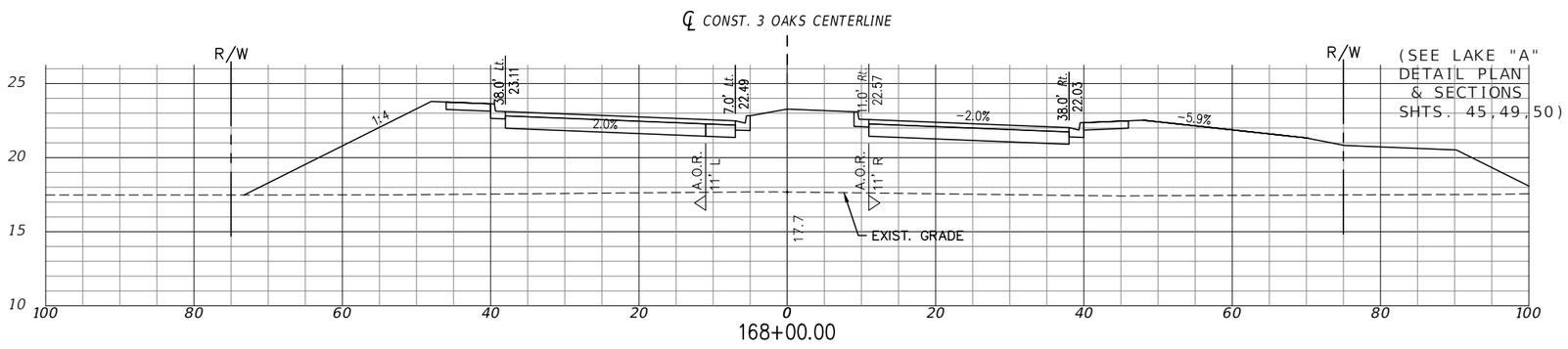

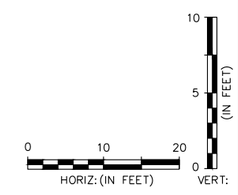

EXC		EMB	
A	V	A	V
0	378	619	28060
0	378	629	27714
0	378	606	26508

P:\CAD\2017\17-372\3-Oaks-Ph1\PLOT_PHASE1\THREE OAKS XSECT_A.dwg, 60 ROADWAY CROSS SECTION, 4/29/2019 3:52:04 PM, Avalon Engineering Inc.

DATE	BY	REVISION DESCRIPTION

AVALON PROJECT: 17-372
PROJ. MGR. Jack Schrager, PE, VP
LEE COUNTY DOT PROJECT: CN160642/ANB
LDOT PROJ. MGR. VINCENT MILLER

AVALON ENGINEERING, INC.
2503 DEL PRADO BLVD, SUITE 200
CAPE CORAL, FLORIDA 33904
FBPE#3128 (239) 573-2077

LEE COUNTY DEPARTMENT OF TRANSPORTATION
(239) 533-8580

THREE OAKS PARKWAY EXTENSION
PHASE 1: FIDDLESTICKS CANAL TO STA 265+20
LEE COUNTY, FLORIDA

ROADWAY CROSS SECTION
THREE OAKS PKWY EXT.

SHEET 60 OF 110

NOTE:
1.) ALL EXISTING AND PROPOSED GRADES SHOWN REFER TO N.A.V.D. 1988. TO CONVERT TO N.G.V.D. 1929 ADD 1.18 FT.

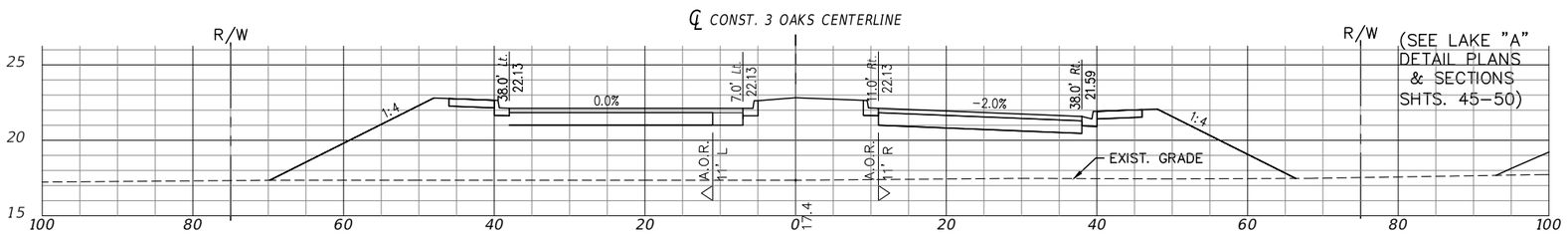

169+27.74

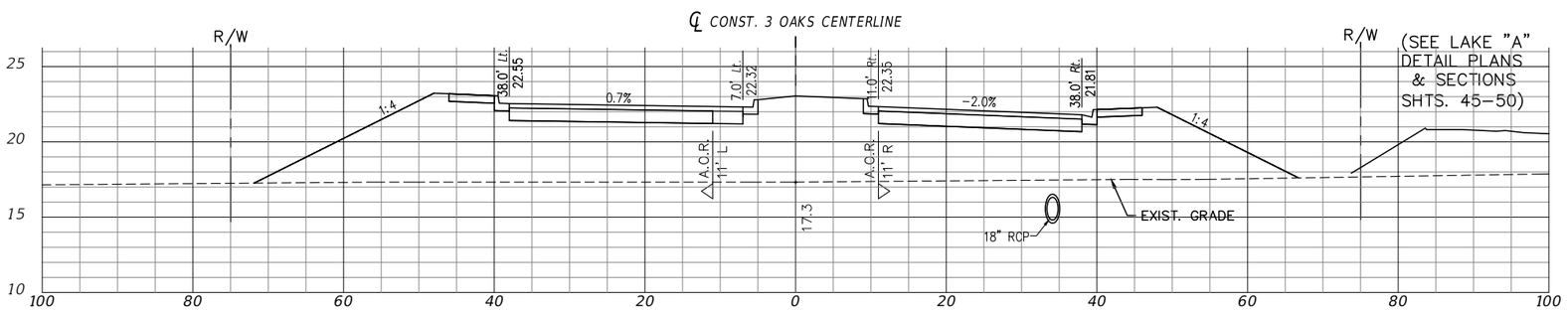

169+00.00

EXC		EMB	
A	V	A	V
0	378	491	29273
0	378	532	28748

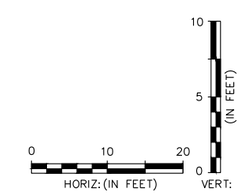

P:\CAD\2017\17-372\3-Oaks-Ph1\PLOT_PHASE1\THREE OAKS XSECT_A.dwg, 61 ROADWAY CROSS SECTION, 4/29/2019 3:52:35 PM, Avalon Engineering Inc.

DATE	BY	REVISION DESCRIPTION

AVALON PROJECT: 17-372
PROJ. MGR. Jack Schrager, PE, VP
LEE COUNTY DOT PROJECT: CN160642/ANB
LDOT PROJ. MGR. VINCENT MILLER

AVALON ENGINEERING, INC.
2503 DEL PRADO BLVD, SUITE 200
CAPE CORAL, FLORIDA 33904
FBPE#3128 (239) 573-2077

LEE COUNTY DEPARTMENT OF TRANSPORTATION
(239) 533-8580

THREE OAKS PARKWAY EXTENSION
PHASE 1: FIDDLESTICKS CANAL TO STA 265+20
LEE COUNTY, FLORIDA

ROADWAY CROSS SECTION
THREE OAKS PKWY EXT.

SHEET
61 OF 110

NOTE:
1.) ALL EXISTING AND PROPOSED GRADES SHOWN REFER TO N.A.V.D. 1988. TO CONVERT TO N.G.V.D. 1929 ADD 1.18 FT.

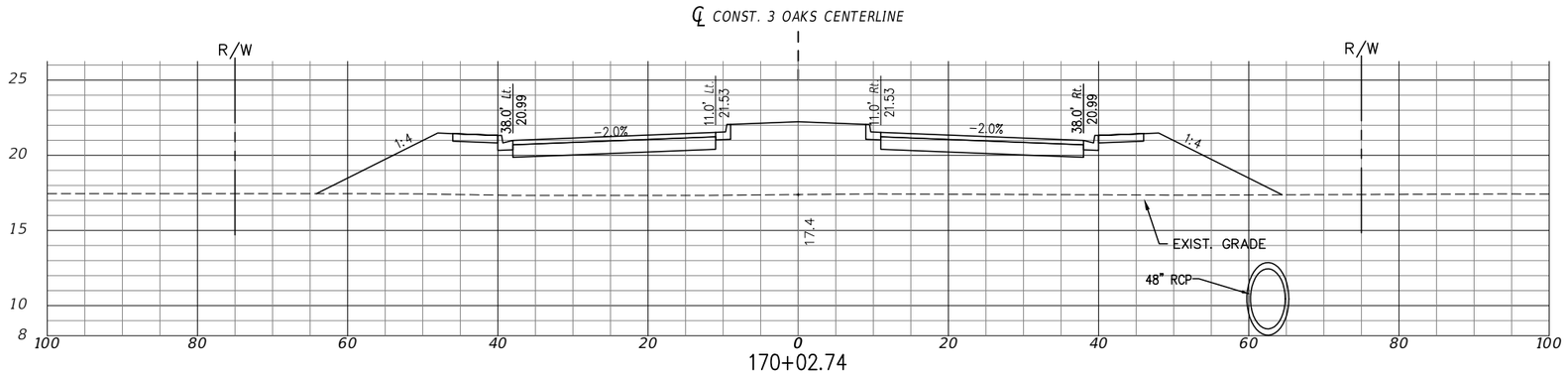

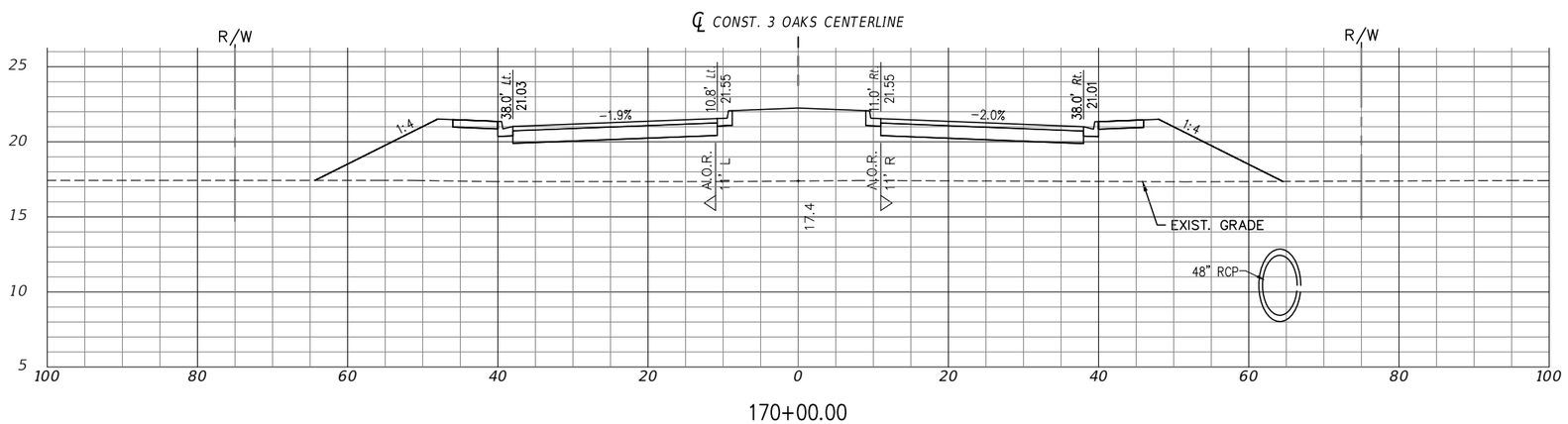

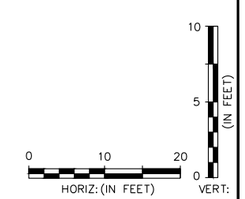

EXC		EMB	
A	V	A	V
0	378	389	30494
0	378	392	30454

P:\CAD\2017\17-372\3-Oaks-Ph1\PLOT_PHASE1\THREE OAKS XSECT_A.dwg, 62 ROADWAY CROSS SECTION, 4/29/2019 3:53:05 PM, Avalon Engineering Inc.

DATE	BY	REVISION DESCRIPTION

AVALON PROJECT: 17-372
PROJ. MGR. Jack Schrager, PE, VP
LEE COUNTY DOT PROJECT: CN160642/ANB
LDOT PROJ. MGR. VINCENT MILLER

AVALON ENGINEERING, INC.
2503 DEL PRADO BLVD, SUITE 200
CAPE CORAL, FLORIDA 33904
FBPE#3128 (239) 573-2077

LEE COUNTY DEPARTMENT OF TRANSPORTATION
(239) 533-8580

THREE OAKS PARKWAY EXTENSION
PHASE 1: FIDDLESTICKS CANAL TO STA 265+20
LEE COUNTY, FLORIDA

ROADWAY CROSS SECTION
THREE OAKS PKWY EXT.

SHEET
62 OF 110

NOTE:
1.) ALL EXISTING AND PROPOSED GRADES SHOWN REFER TO N.A.V.D. 1988. TO CONVERT TO N.G.V.D. 1929 ADD 1.18 FT.

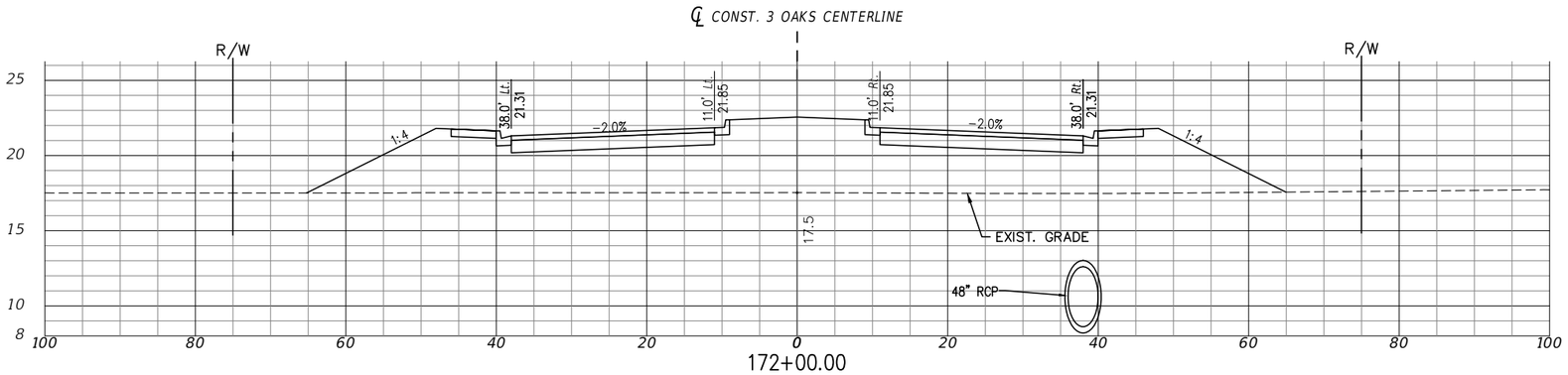

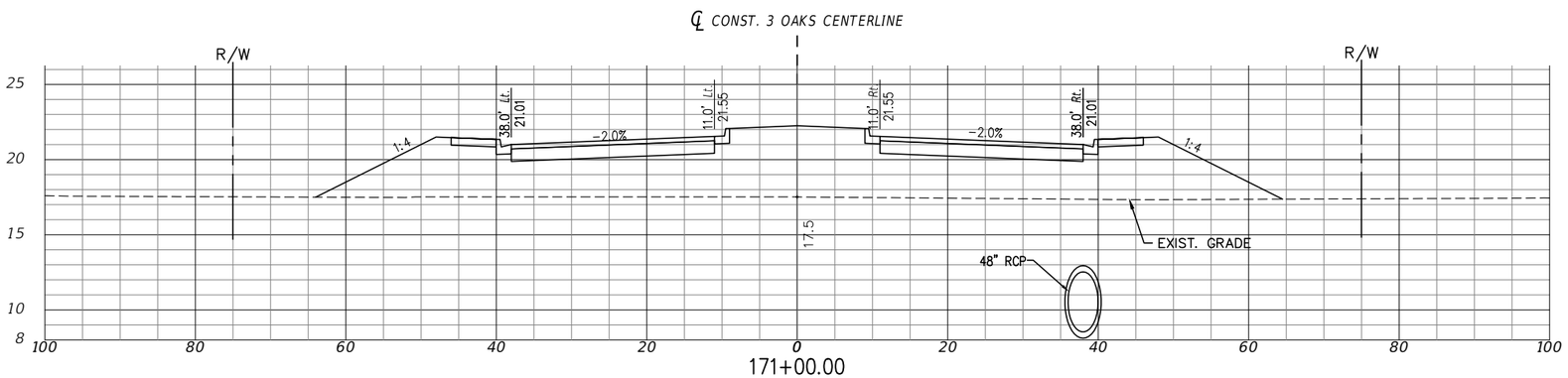

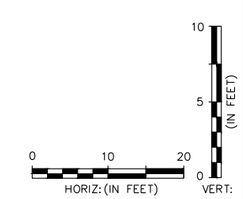

EXC		EMB	
A	V	A	V
0	378	413	33351
0	378	381	31880

P:\CAD\2017\17-372\3-Oaks-Ph1\PLOT_PHASE1\THREE OAKS XSECT_B.dwg, 63 ROADWAY CROSS SECTION, 4/29/2019 3:54:22 PM, Avalon Engineering Inc.

DATE	BY	REVISION DESCRIPTION

AVALON PROJECT: 17-372
PROJ. MGR. Jack Schrager, PE, VP
LEE COUNTY DOT PROJECT: CN160642/ANB
LDOT PROJ. MGR. VINCENT MILLER

AVALON ENGINEERING, INC.
2503 DEL PRADO BLVD, SUITE 200
CAPE CORAL, FLORIDA 33904
FBPE#3128 (239) 573-2077

LEE COUNTY DEPARTMENT OF TRANSPORTATION
(239) 533-8580

THREE OAKS PARKWAY EXTENSION
PHASE 1: FIDDLESTICKS CANAL TO STA 265+20
LEE COUNTY, FLORIDA

ROADWAY CROSS SECTION
THREE OAKS PKWY EXT.

NOTE:
1.) ALL EXISTING AND PROPOSED GRADES SHOWN REFER TO N.A.V.D. 1988. TO CONVERT TO N.G.V.D. 1929 ADD 1.18 FT.

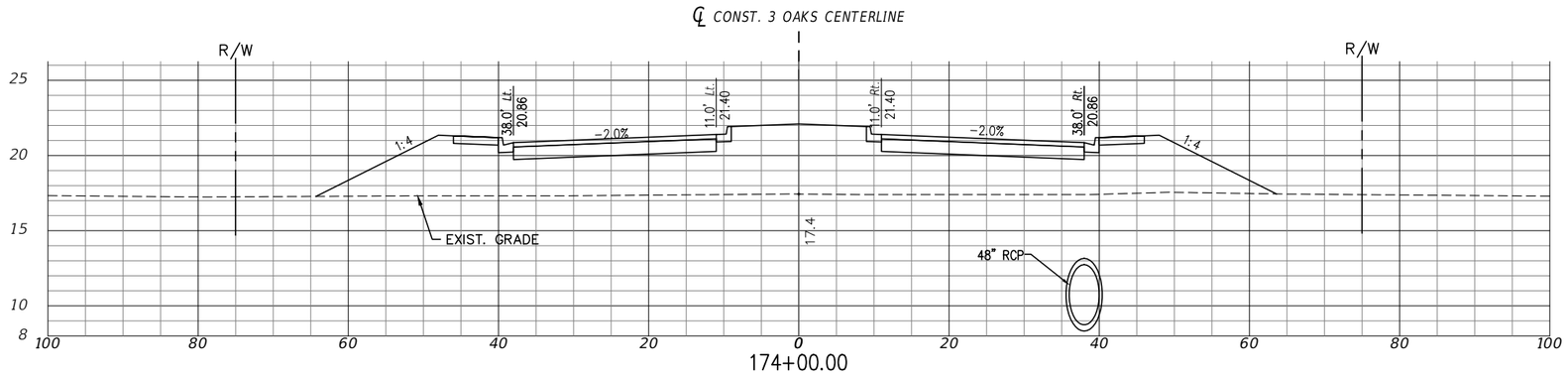

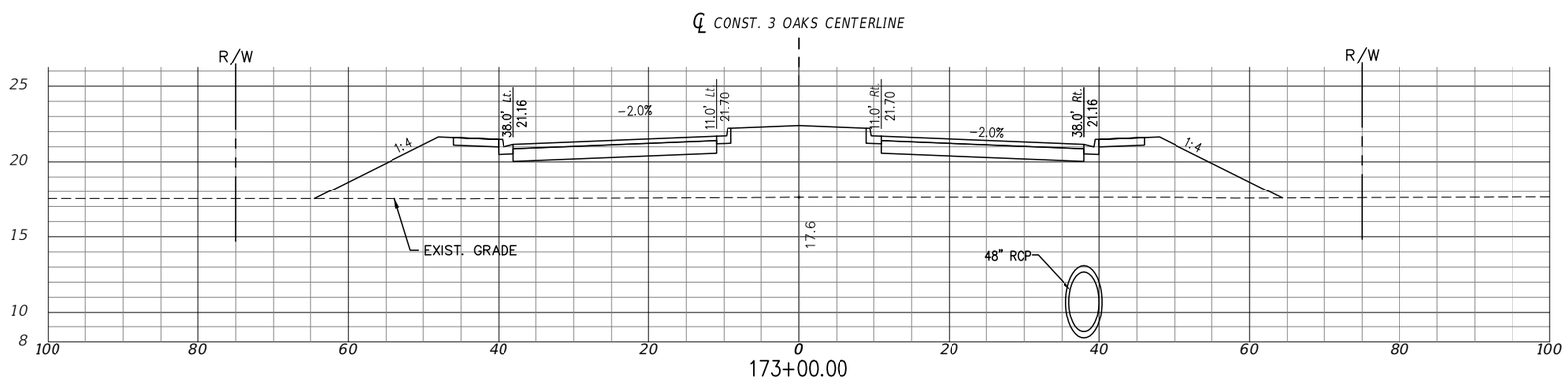

EXC		EMB	
A	V	A	V
0	378	370	36230
0	378	386	34830

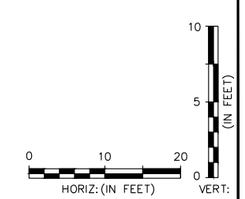

P:\CAD\2017\17-372\3-Oaks-Ph1\PLOT_PHASE1\THREE OAKS XSECT_B.dwg, 64 ROADWAY CROSS SECTION, 4/29/2019 3:54:46 PM, Avalon Engineering Inc.

DATE	BY	REVISION DESCRIPTION

AVALON PROJECT: 17-372
PROJ. MGR. Jack Schrager, PE, VP
LEE COUNTY DOT PROJECT: CN160642/ANB
LDOT PROJ. MGR. VINCENT MILLER

AVALON ENGINEERING, INC.
2503 DEL PRADO BLVD, SUITE 200
CAPE CORAL, FLORIDA 33904
FBPE#3128 (239) 573-2077

LEE COUNTY DEPARTMENT OF TRANSPORTATION
(239) 533-8580

THREE OAKS PARKWAY EXTENSION
PHASE 1: FIDDLESTICKS CANAL TO STA 265+20
LEE COUNTY, FLORIDA

ROADWAY CROSS SECTION
THREE OAKS PKWY EXT.

SHEET
64 OF 110

NOTE:
1.) ALL EXISTING AND PROPOSED GRADES SHOWN REFER TO N.A.V.D. 1988. TO CONVERT TO N.G.V.D. 1929 ADD 1.18 FT.

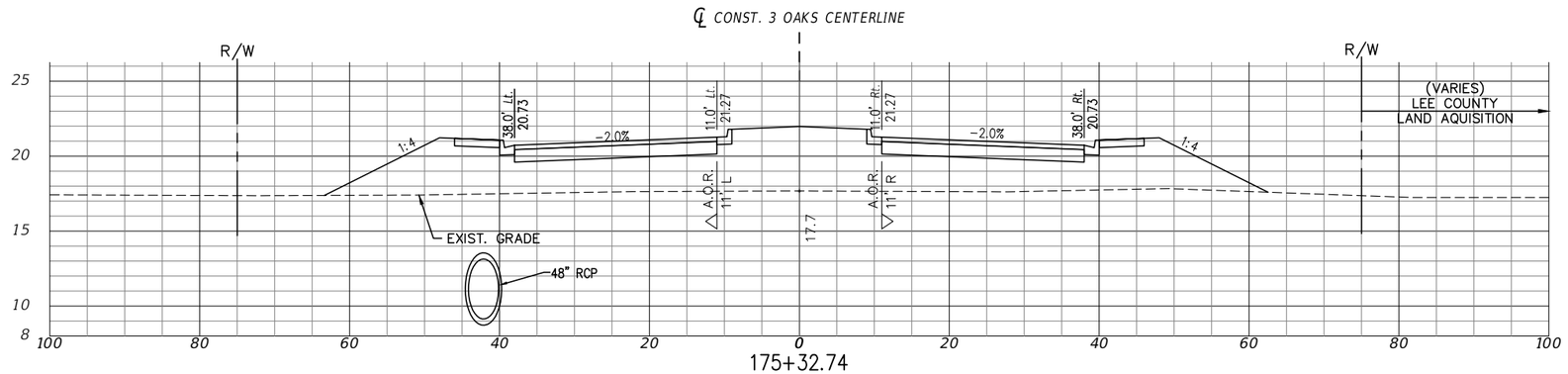

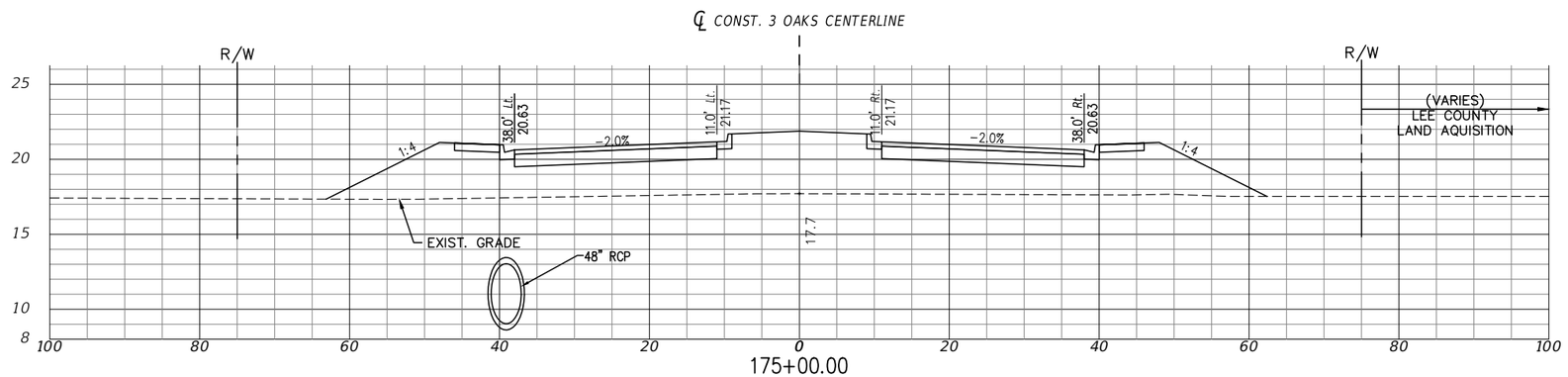

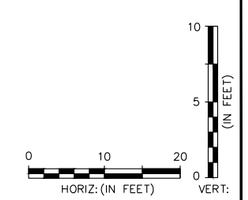

EXC		EMB	
A	V	A	V
0	378	326	37898
0	378	319	37507

P:\CAD\2017\17-372\3-Oaks-Ph1\PLOT_PHASE1\THREE OAKS XSECT_B.dwg, 65 ROADWAY CROSS SECTION, 4/29/2019 3:55:05 PM, Avalon Engineering Inc.

DATE	BY	REVISION DESCRIPTION

AVALON PROJECT: 17-372
PROJ. MGR. Jack Schrager, PE, VP
LEE COUNTY DOT PROJECT: CN160642/ANB
LDOT PROJ. MGR. VINCENT MILLER

AVALON ENGINEERING, INC.
2503 DEL PRADO BLVD, SUITE 200
CAPE CORAL, FLORIDA 33904
FBPE#3128 (239) 573-2077

LEE COUNTY DEPARTMENT OF TRANSPORTATION
(239) 533-8580

THREE OAKS PARKWAY EXTENSION
PHASE 1: FIDDLESTICKS CANAL TO STA 265+20
LEE COUNTY, FLORIDA

ROADWAY CROSS SECTION
THREE OAKS PKWY EXT.

NOTE:
1.) ALL EXISTING AND PROPOSED GRADES SHOWN REFER TO N.A.V.D. 1988. TO CONVERT TO N.G.V.D. 1929 ADD 1.18 FT.

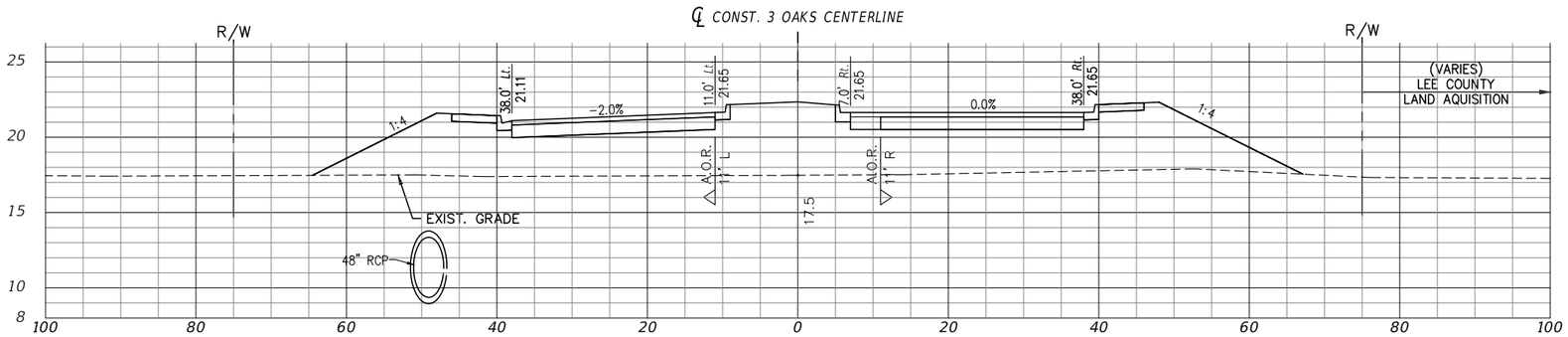

176+07.74

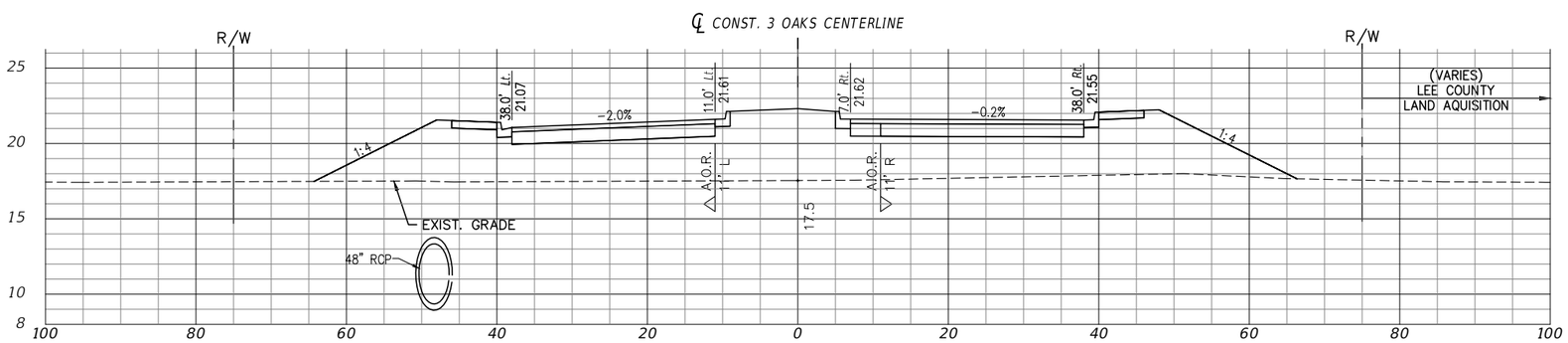

176+00.00

EXC		EMB	
A	V	A	V
0	378	405	38901
0	378	388	38788

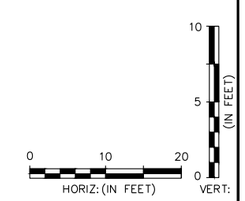

P:\CAD\2017\17-372\3-Oaks-Ph1\PLOT_PHASE1\THREE OAKS XSECT_B.dwg, 66 ROADWAY CROSS SECTION, 4/29/2019 3:55:31 PM, Avalon Engineering Inc.

DATE	BY	REVISION DESCRIPTION

AVALON PROJECT: 17-372
PROJ. MGR. Jack Schrager, PE, VP
LEE COUNTY DOT PROJECT: CN160642/ANB
LDOT PROJ. MGR. VINCENT MILLER

AVALON ENGINEERING, INC.
2503 DEL PRADO BLVD, SUITE 200
CAPE CORAL, FLORIDA 33904
FBPE#3128 (239) 573-2077

LEE COUNTY DEPARTMENT OF TRANSPORTATION
(239) 533-8580

THREE OAKS PARKWAY EXTENSION
PHASE 1: FIDDLESTICKS CANAL TO STA 265+20
LEE COUNTY, FLORIDA

ROADWAY CROSS SECTION
THREE OAKS PKWY EXT.

SHEET
66 OF 110

NOTE:
1.) ALL EXISTING AND PROPOSED GRADES SHOWN REFER TO N.A.V.D. 1988. TO CONVERT TO N.G.V.D. 1929 ADD 1.18 FT.

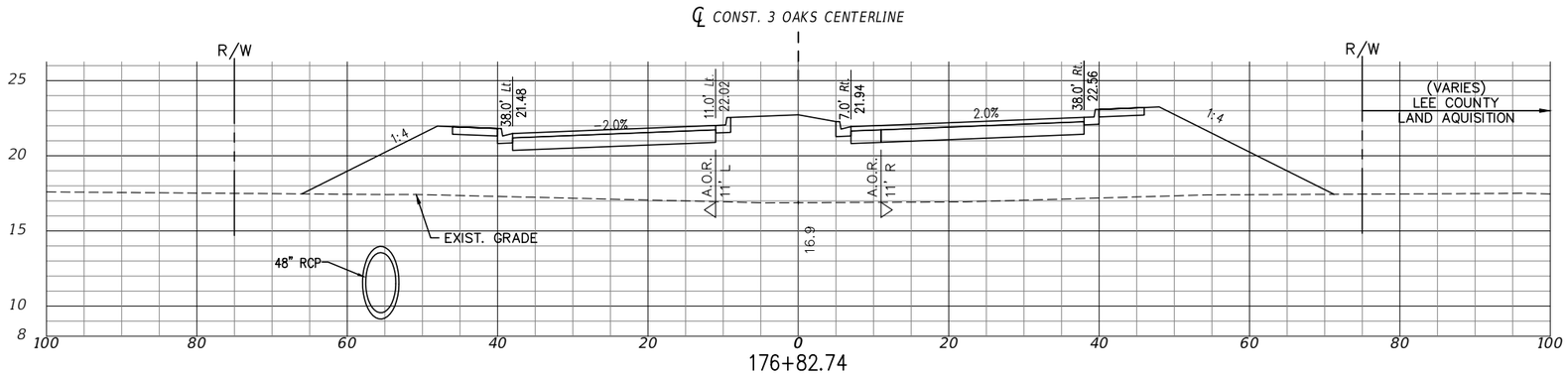

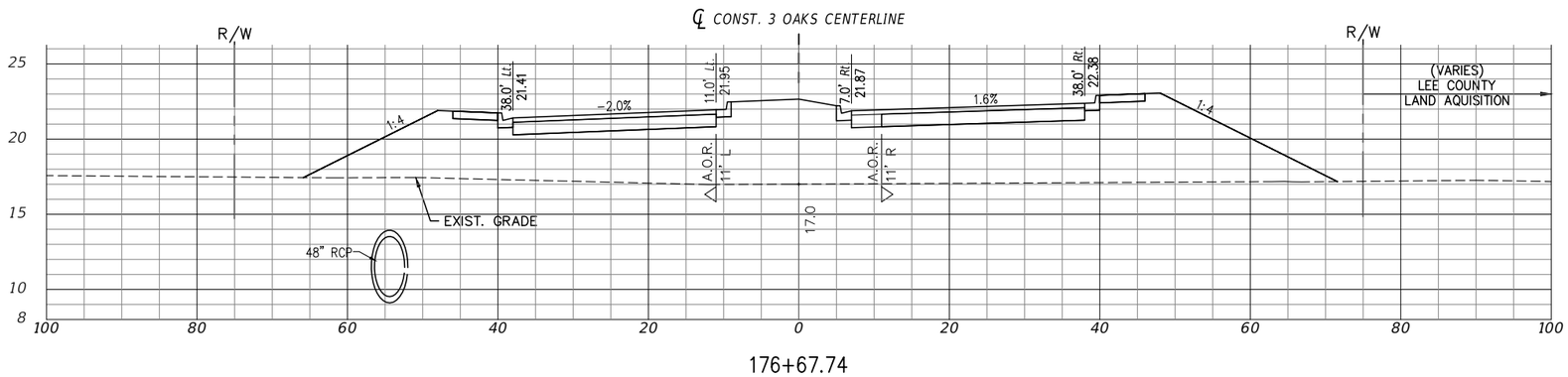

EXC		EMB	
A	V	A	V
0	378	532	40220
0	378	519	39928

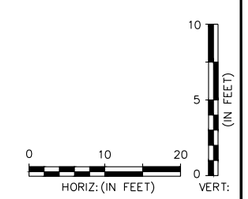

P:\CAD\2017\17-372\3-Oaks-Ph1\PLOT_PHASE1\THREE OAKS XSECT_B.dwg, 67 ROADWAY CROSS SECTION, 4/29/2019 3:56:07 PM, Avalon Engineering Inc.

DATE	BY	REVISION DESCRIPTION

AVALON PROJECT: 17-372
PROJ. MGR. Jack Schrager, PE, VP
LEE COUNTY DOT PROJECT: CN160642/ANB
LDOT PROJ. MGR. VINCENT MILLER

AVALON ENGINEERING, INC.
2503 DEL PRADO BLVD, SUITE 200
CAPE CORAL, FLORIDA 33904
FBPE#3128 (239) 573-2077

LEE COUNTY DEPARTMENT OF TRANSPORTATION
(239) 533-8580

THREE OAKS PARKWAY EXTENSION
PHASE 1: FIDDLESTICKS CANAL TO STA 265+20
LEE COUNTY, FLORIDA

ROADWAY CROSS SECTION
THREE OAKS PKWY EXT.

SHEET
67 OF 110

NOTE:
1.) ALL EXISTING AND PROPOSED GRADES SHOWN REFER TO N.A.V.D. 1988. TO CONVERT TO N.G.V.D. 1929 ADD 1.18 FT.

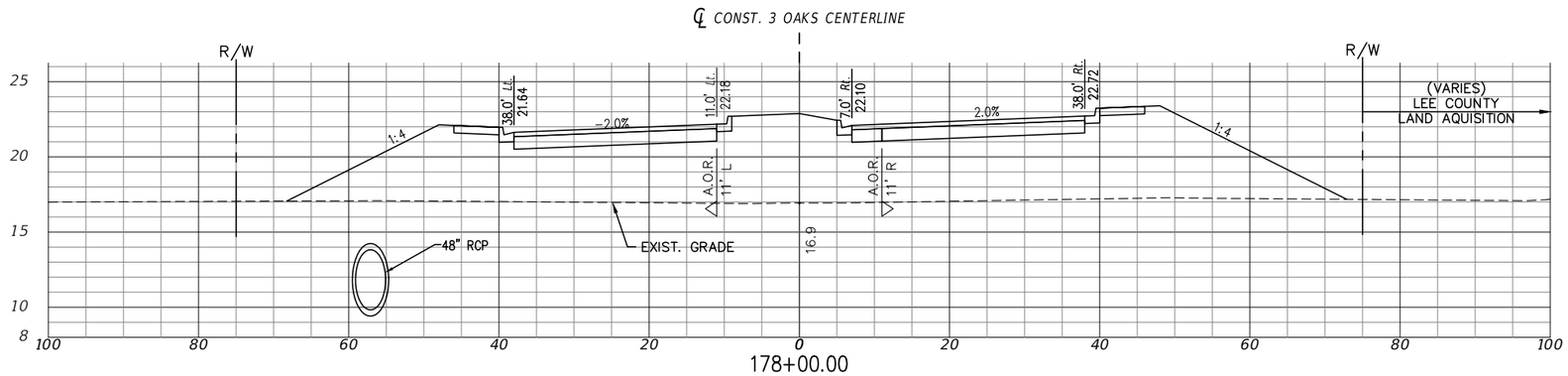

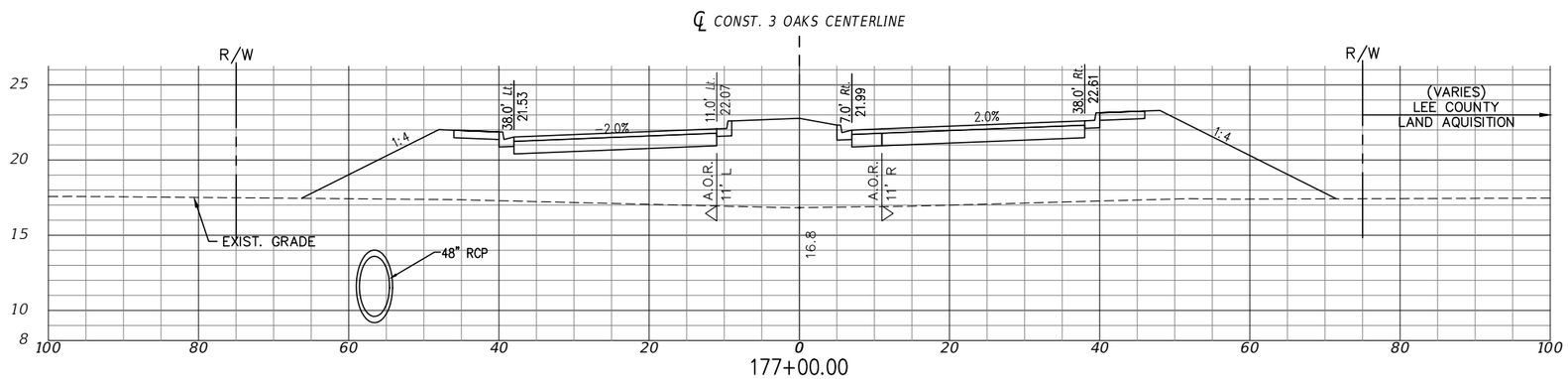

EXC		EMB	
A	V	A	V
0	378	569	42619
0	378	537	40562

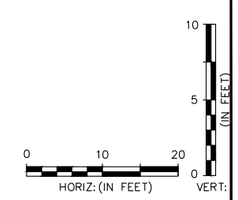

P:\CAD\2017\17-372\3-Oaks-Ph1\PLOT_PHASE1\THREE OAKS XSECT_B.dwg, 68 ROADWAY CROSS SECTION, 4/29/2019 3:56:34 PM, Avalon Engineering Inc.

DATE	BY	REVISION DESCRIPTION

AVALON PROJECT: 17-372
PROJ. MGR. Jack Schrager, PE, VP
LEE COUNTY DOT PROJECT: CN160642/ANB
LDOT PROJ. MGR. VINCENT MILLER

AVALON ENGINEERING, INC.
2503 DEL PRADO BLVD, SUITE 200
CAPE CORAL, FLORIDA 33904
FBPE#3128 (239) 573-2077

LEE COUNTY DEPARTMENT OF TRANSPORTATION
(239) 533-8580

THREE OAKS PARKWAY EXTENSION
PHASE 1: FIDDLESTICKS CANAL TO STA 265+20
LEE COUNTY, FLORIDA

ROADWAY CROSS SECTION
THREE OAKS PKWY EXT.

SHEET
68 of 110

NOTE:
1.) ALL EXISTING AND PROPOSED GRADES SHOWN REFER TO N.A.V.D. 1988. TO CONVERT TO N.G.V.D. 1929 ADD 1.18 FT.

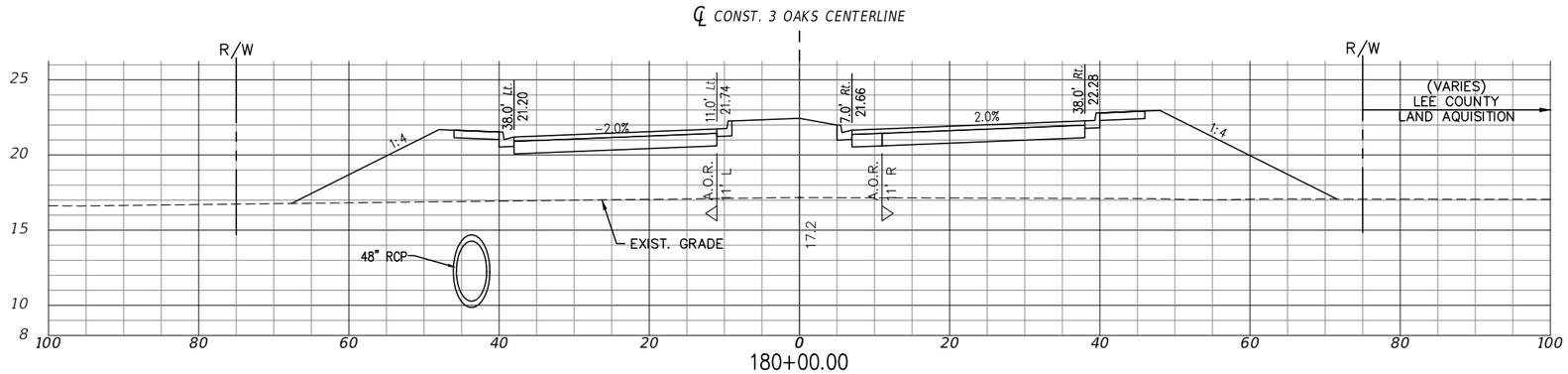

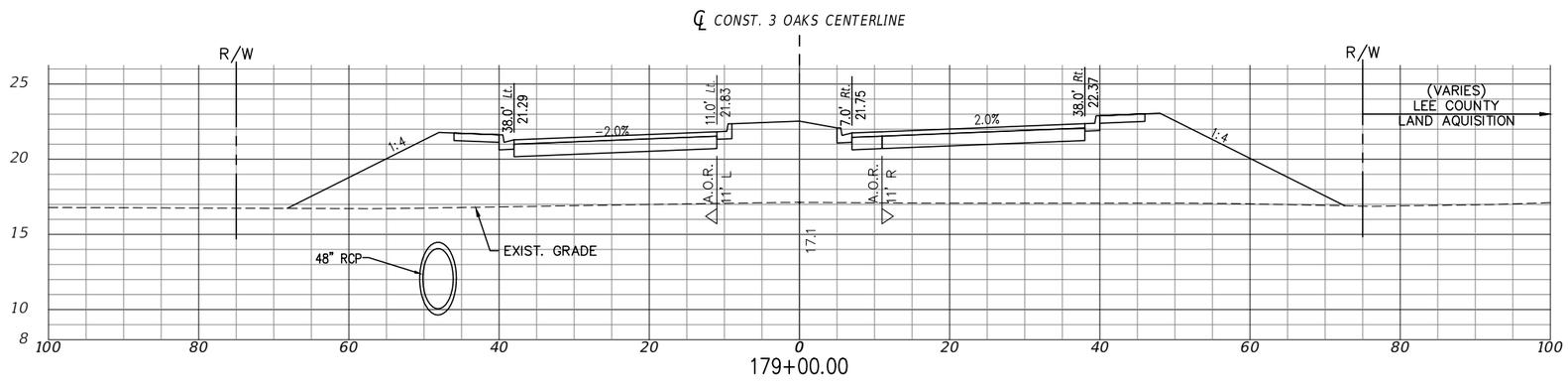

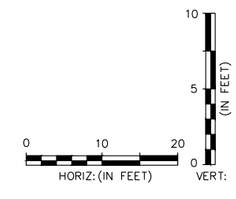

EXC		EMB	
A	V	A	V
0	378	511	46606
0	378	532	44667

P:\CAD\2017\17-372\3-Oaks-Ph1\PLOT_PHASE1\THREE OAKS XSECT_B.dwg, 69 ROADWAY CROSS SECTION, 4/29/2019 3:56:54 PM, Avalon Engineering Inc.

DATE	BY	REVISION DESCRIPTION

AVALON PROJECT: 17-372
PROJ. MGR. Jack Schrager, PE, VP
LEE COUNTY DOT PROJECT: CN160642/ANB
LDOT PROJ. MGR. VINCENT MILLER

AVALON ENGINEERING, INC.
2503 DEL PRADO BLVD, SUITE 200
CAPE CORAL, FLORIDA 33904
FBPE#3128 (239) 573-2077

LEE COUNTY DEPARTMENT OF TRANSPORTATION
(239) 533-8580

THREE OAKS PARKWAY EXTENSION
PHASE 1: FIDDLESTICKS CANAL TO STA 265+20
LEE COUNTY, FLORIDA

ROADWAY CROSS SECTION
THREE OAKS PKWY EXT.

NOTE:
1.) ALL EXISTING AND PROPOSED GRADES SHOWN REFER TO N.A.V.D. 1988. TO CONVERT TO N.G.V.D. 1929 ADD 1.18 FT.

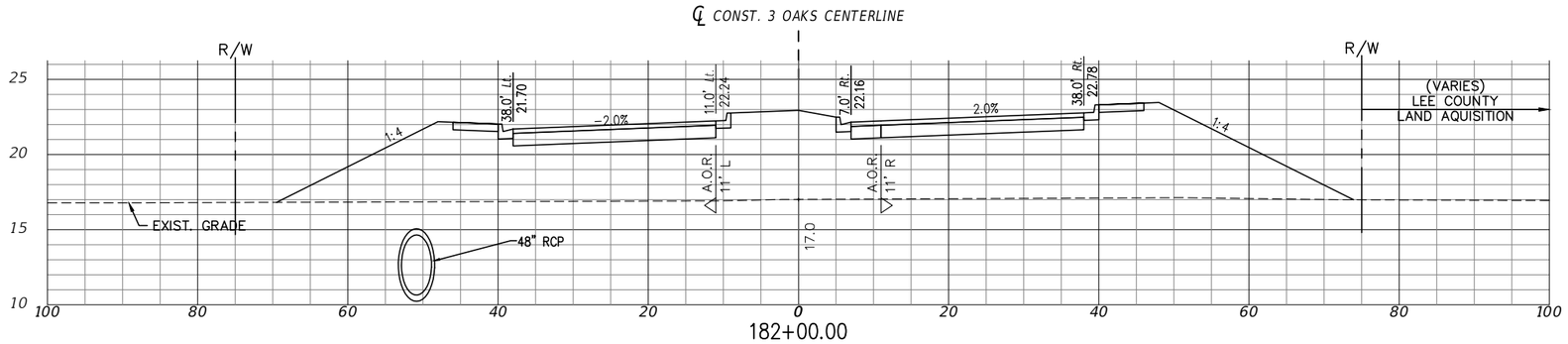

182+00.00

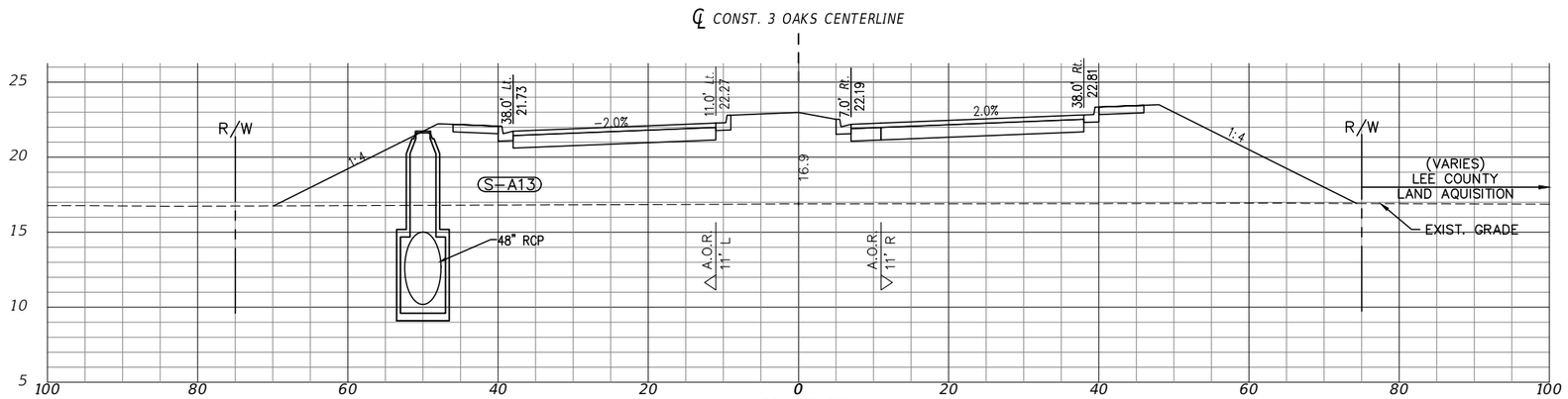

181+78.67

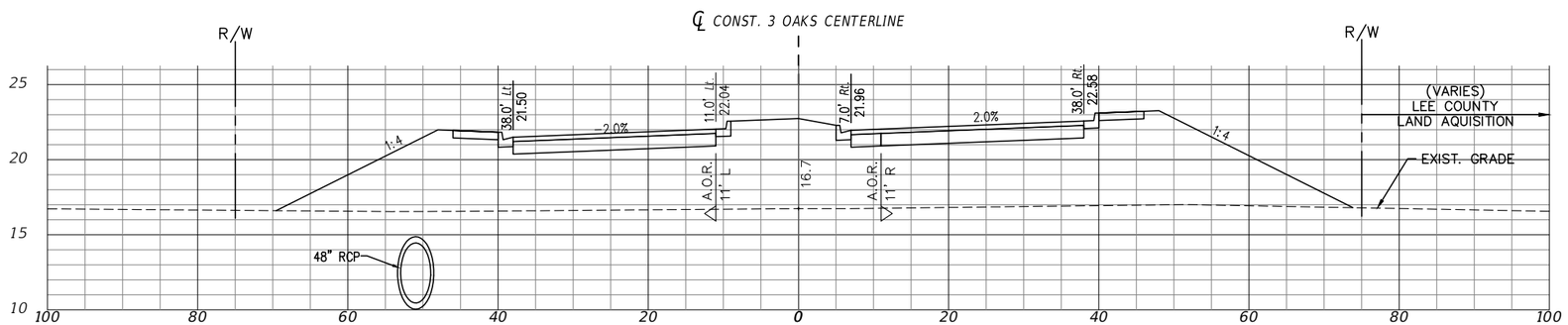

181+00.00

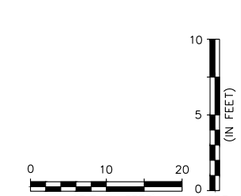

EXC		EMB	
A	V	A	V
0	378	591	50901
0	378	612	50424
0	378	594	48661

P:\CAD\2017\17-372\3-Oaks-Ph1\PLOT_PHASE1\THREE OAKS XSECT_B.dwg, 70 ROADWAY CROSS SECTION, 4/29/2019 3:57:13 PM, Avalon Engineering Inc.

DATE	BY	REVISION DESCRIPTION

AVALON PROJECT: 17-372
PROJ. MGR. Jack Schrager, PE, VP
LEE COUNTY DOT PROJECT: CN160642/ANB
LDOT PROJ. MGR. VINCENT MILLER

AVALON ENGINEERING, INC.
2503 DEL PRADO BLVD, SUITE 200
CAPE CORAL, FLORIDA 33904
FBPE#3128 (239) 573-2077

LEE COUNTY DEPARTMENT OF TRANSPORTATION
(239) 533-8580

THREE OAKS PARKWAY EXTENSION
PHASE 1: FIDDLESTICKS CANAL TO STA 265+20
LEE COUNTY, FLORIDA

ROADWAY CROSS SECTION
THREE OAKS PKWY EXT.

SHEET
70 OF 110

NOTE:
1.) ALL EXISTING AND PROPOSED GRADES SHOWN REFER TO N.A.V.D. 1988. TO CONVERT TO N.G.V.D. 1929 ADD 1.18 FT.

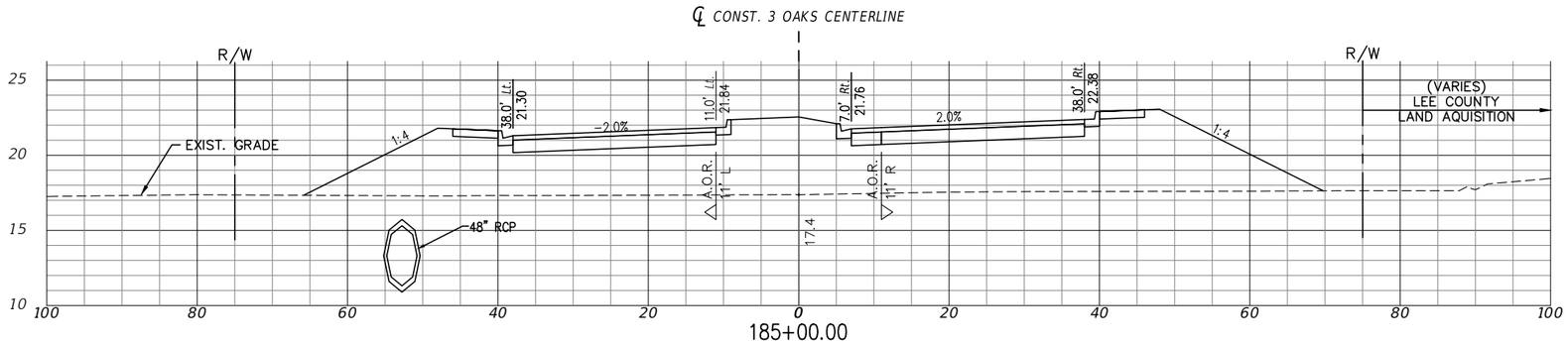

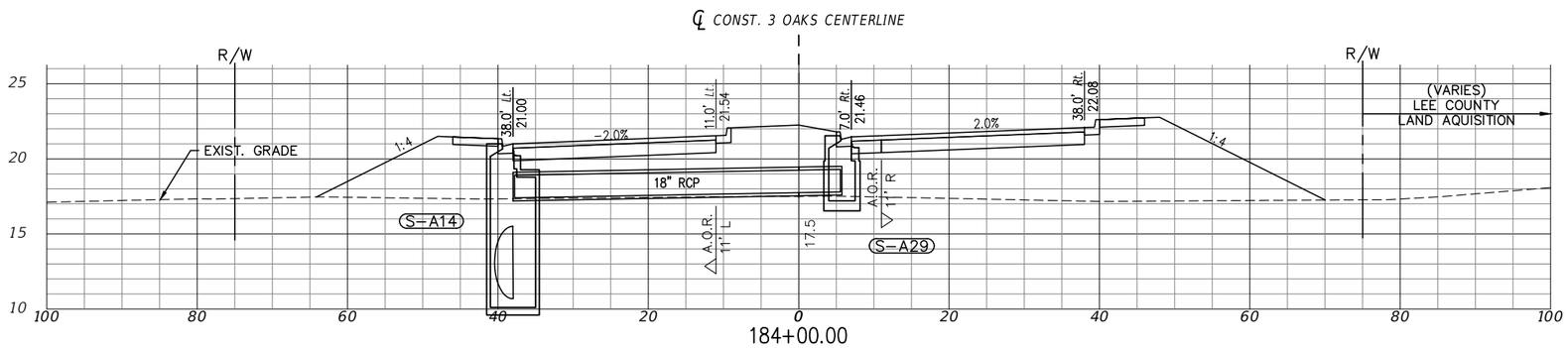

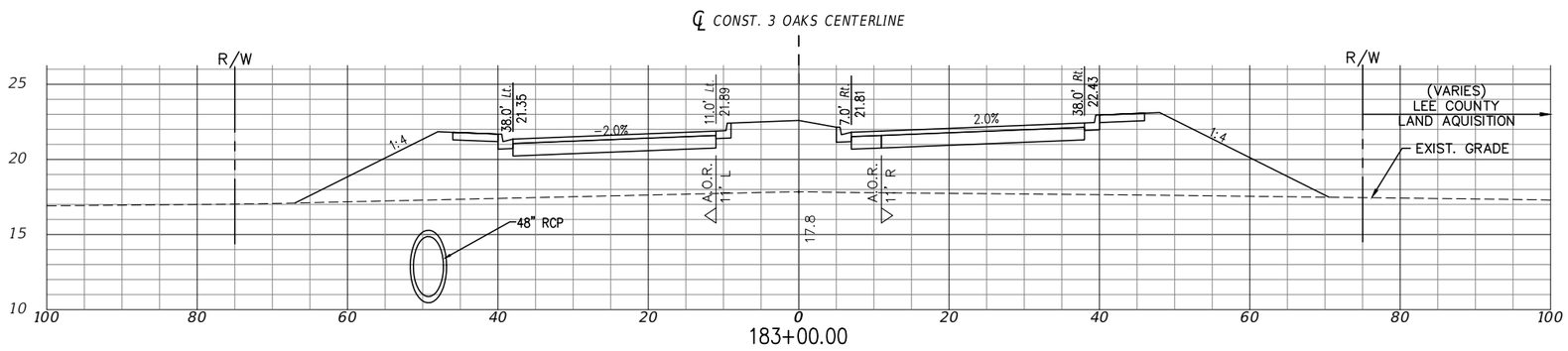

EXC		EMB	
A	V	A	V
0	378	470	56225
0	378	442	54528
0	378	459	52851

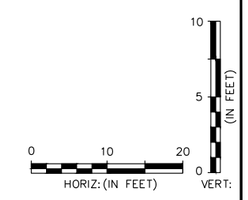

P:\CAD\2017\17-372\3-Oaks-Ph1\PLOT_PHASE1\THREE OAKS XSECT_B.dwg, 71 ROADWAY CROSS SECTION, 4/29/2019 3:57:29 PM, Avalon Engineering Inc.

DATE	BY	REVISION DESCRIPTION

AVALON PROJECT: 17-372
PROJ. MGR. Jack Schrager, PE, VP
LEE COUNTY DOT PROJECT: CN160642/ANB
LDOT PROJ. MGR. VINCENT MILLER

AVALON ENGINEERING, INC.
2503 DEL PRADO BLVD, SUITE 200
CAPE CORAL, FLORIDA 33904
FBPE#3128 (239) 573-2077

LEE COUNTY DEPARTMENT OF TRANSPORTATION
(239) 533-8580

THREE OAKS PARKWAY EXTENSION
PHASE 1: FIDDLESTICKS CANAL TO STA 265+20
LEE COUNTY, FLORIDA

ROADWAY CROSS SECTION
THREE OAKS PKWY EXT.

NOTE:
1.) ALL EXISTING AND PROPOSED GRADES SHOWN REFER TO N.A.V.D. 1988. TO CONVERT TO N.G.V.D. 1929 ADD 1.18 FT.

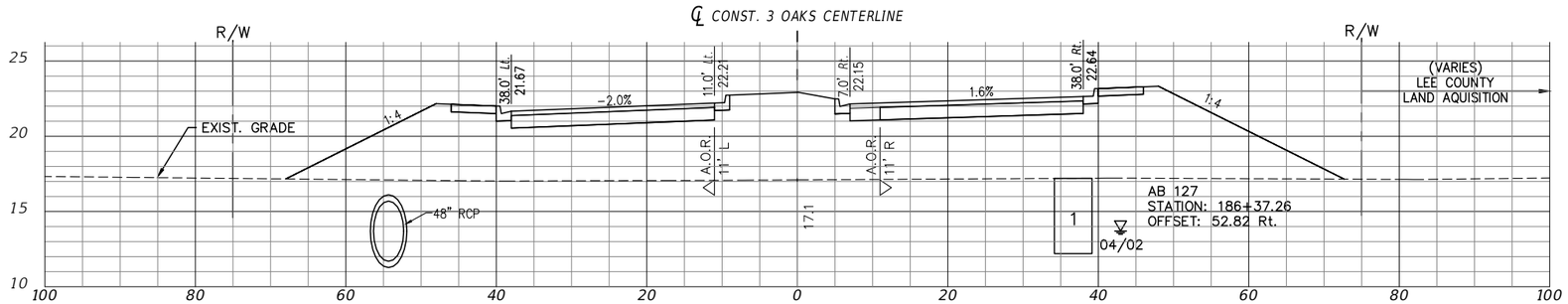

186+89.60

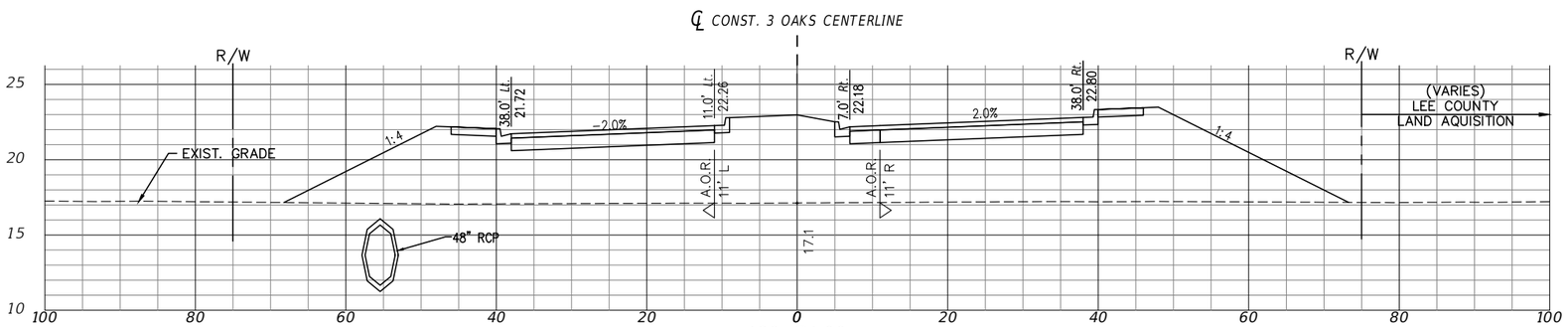

186+74.60

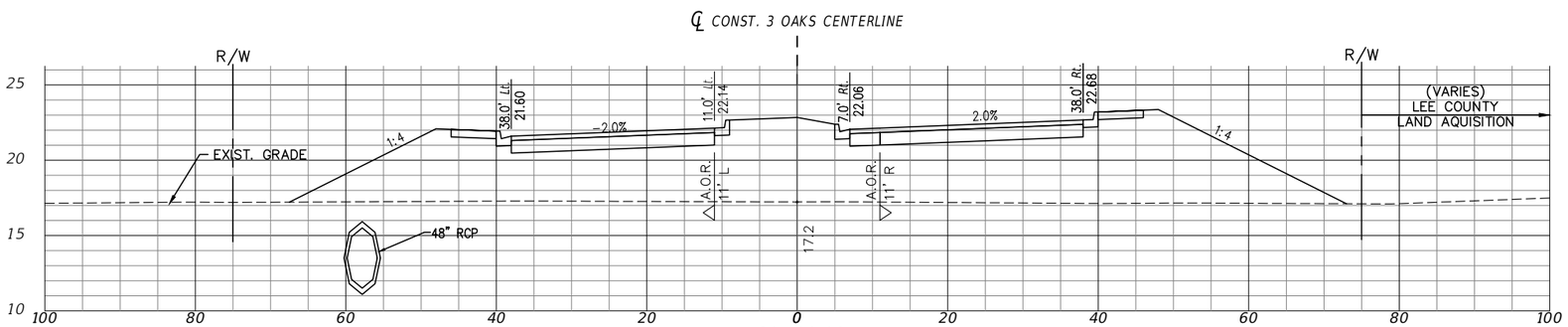

186+00.00

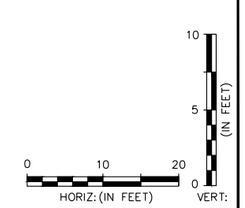

EXC		EMB	
A	V	A	V
0	378	560	59970
0	378	570	59656
0	378	543	58111

P:\CAD\2017\17-372\3-Oaks-Ph1\PLOT_PHASE1\THREE OAKS XSECT_B.dwg, 72 ROADWAY CROSS SECTION, 4/29/2019 3:57:56 PM, Avalon Engineering Inc.

DATE	BY	REVISION DESCRIPTION

AVALON PROJECT: 17-372
PROJ. MGR. Jack Schrager, PE, VP
LEE COUNTY DOT PROJECT: CN160642/ANB
LDOT PROJ. MGR. VINCENT MILLER

AVALON ENGINEERING, INC.
2503 DEL PRADO BLVD. SUITE 200
CAPE CORAL, FLORIDA 33904
FBPE#3128 (239) 573-2077

LEE COUNTY DEPARTMENT OF TRANSPORTATION
(239) 533-8580

THREE OAKS PARKWAY EXTENSION
PHASE 1: FIDDLESTICKS CANAL TO STA 265+20
LEE COUNTY, FLORIDA

ROADWAY CROSS SECTION
THREE OAKS PKWY EXT.

SHEET 72 OF 110

NOTE:
1.) ALL EXISTING AND PROPOSED GRADES SHOWN REFER TO N.A.V.D. 1988. TO CONVERT TO N.G.V.D. 1929 ADD 1.18 FT.

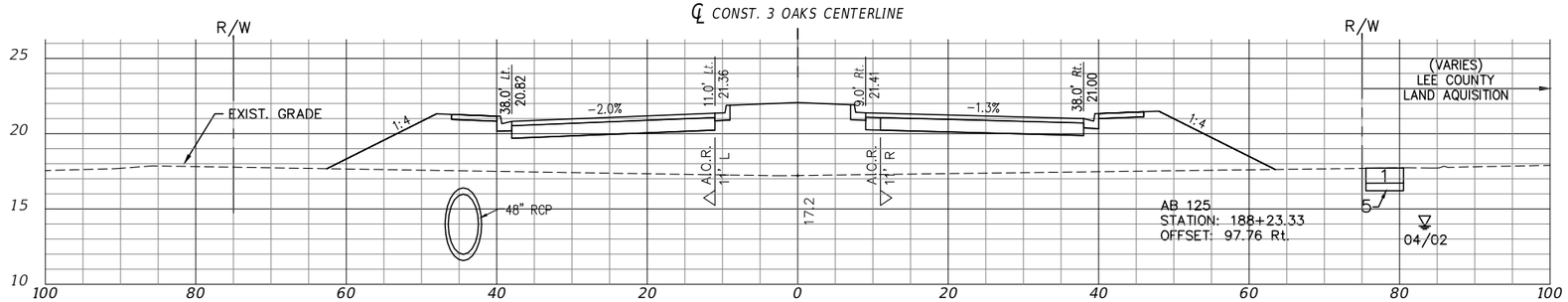

188+00.00

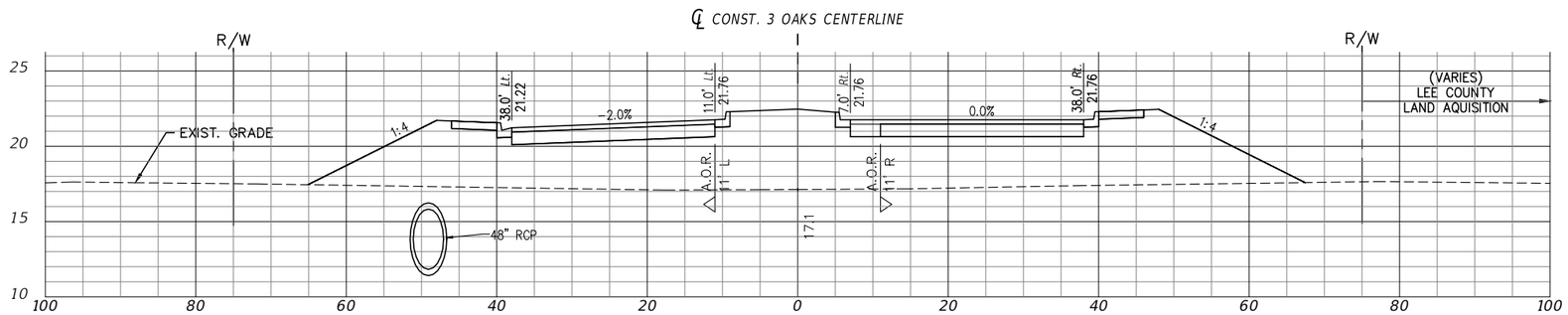

187+49.60

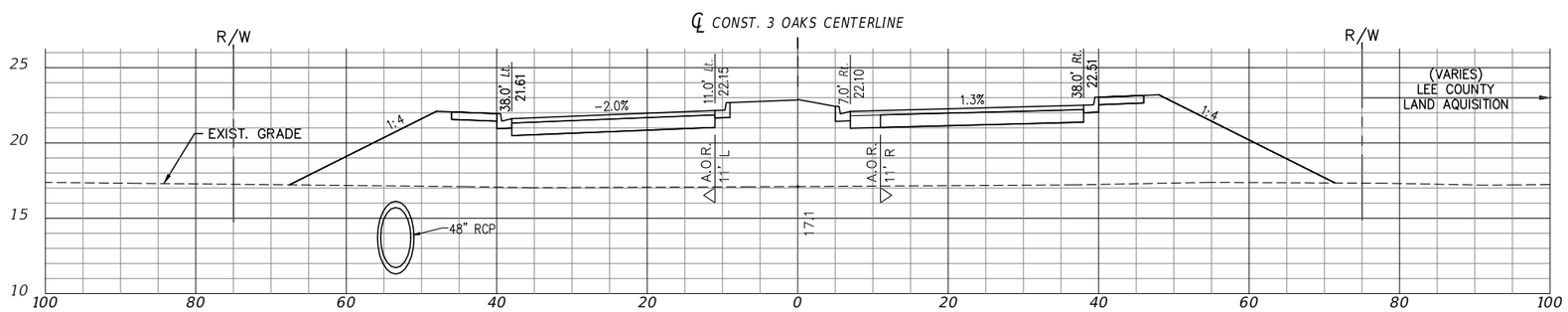

187+00.00

EXC		EMB	
A	V	A	V
0	378	369	61870
0	378	457	61100
0	378	542	60182

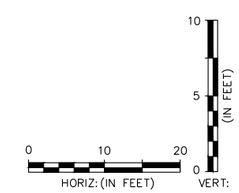

P:\CAD\2017\17-372\3-Oaks-Ph1\PLOT_PHASE1\THREE OAKS XSECT_C.dwg, 73 ROADWAY CROSS SECTIONS, 4/29/2019 3:58:58 PM, Avalon Engineering Inc.

DATE	BY	REVISION DESCRIPTION

AVALON PROJECT: 17-372
PROJ. MGR. Jack Schrager, PE, VP
LEE COUNTY DOT PROJECT: CN160642/ANB
LDOT PROJ. MGR. VINCENT MILLER

AVALON ENGINEERING, INC.
2503 DEL PRADO BLVD, SUITE 200
CAPE CORAL, FLORIDA 33904
FBPE#3128 (239) 573-2077

LEE COUNTY DEPARTMENT OF TRANSPORTATION
(239) 533-8580

THREE OAKS PARKWAY EXTENSION
PHASE 1: FIDDLESTICKS CANAL TO STA 265+20
LEE COUNTY, FLORIDA

ROADWAY CROSS SECTIONS
THREE OAKS PKWY EXT.

NOTE:
1.) ALL EXISTING AND PROPOSED GRADES SHOWN REFER TO N.A.V.D. 1988. TO CONVERT TO N.G.V.D. 1929 ADD 1.18 FT.

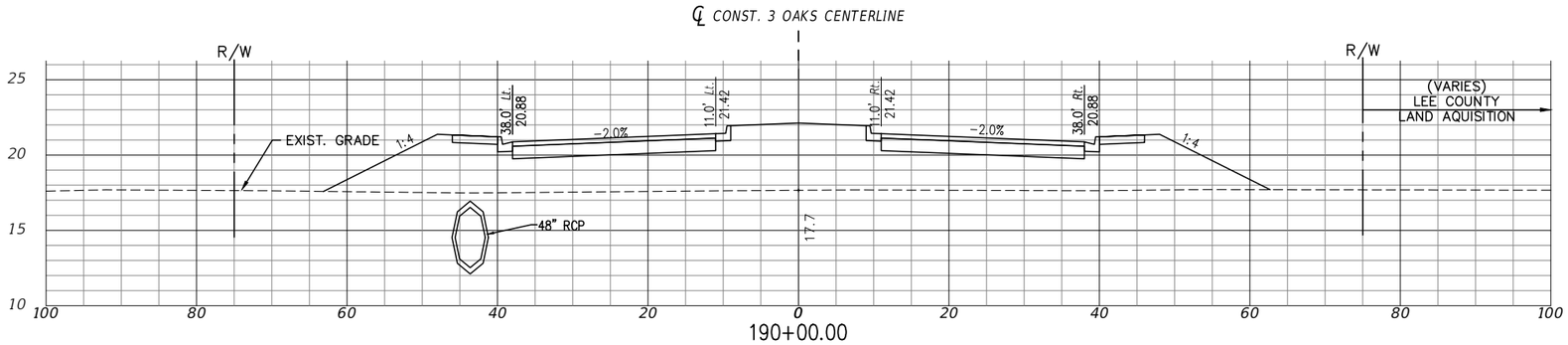

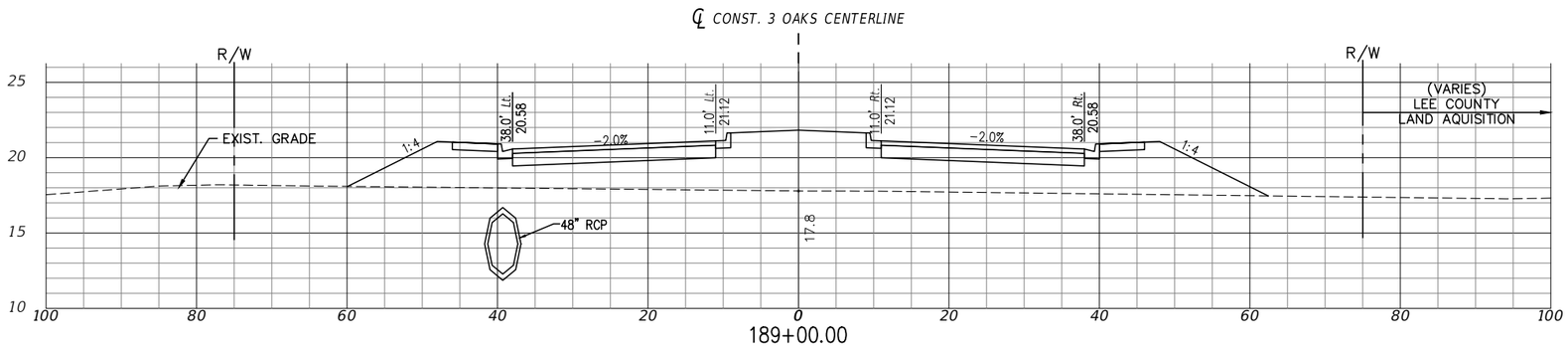

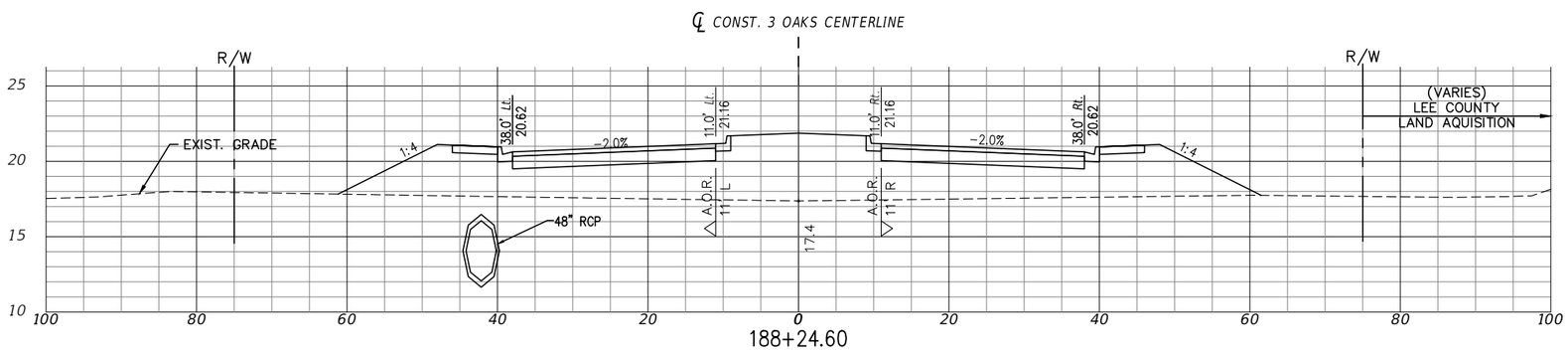

EXC		EMB	
A	V	A	V
0	378	345	64191
0	378	285	63025
0	378	318	62183

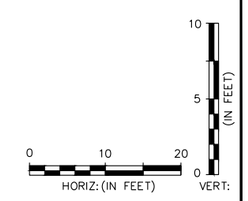

P:\CAD\2017\17-372\3-Oaks-Ph1\PLOT_PHASE1\THREE OAKS XSECT_C.dwg, 74 ROADWAY CROSS SECTION, 4/29/2019 3:59:23 PM, Avalon Engineering Inc.

DATE	BY	REVISION DESCRIPTION

AVALON PROJECT: 17-372
PROJ. MGR. Jack Schrager, PE, VP
LEE COUNTY DOT PROJECT: CN160642/ANB
LDOT PROJ. MGR. VINCENT MILLER

AVALON ENGINEERING, INC.
2503 DEL PRADO BLVD, SUITE 200
CAPE CORAL, FLORIDA 33904
FBPE#3128 (239) 573-2077

LEE COUNTY DEPARTMENT OF TRANSPORTATION
(239) 533-8580

THREE OAKS PARKWAY EXTENSION
PHASE 1: FIDDLESTICKS CANAL TO STA 265+20
LEE COUNTY, FLORIDA

ROADWAY CROSS SECTION
THREE OAKS PKWY EXT.

SHEET
74 OF 110

NOTE:
1.) ALL EXISTING AND PROPOSED GRADES SHOWN REFER TO N.A.V.D. 1988. TO CONVERT TO N.G.V.D. 1929 ADD 1.18 FT.

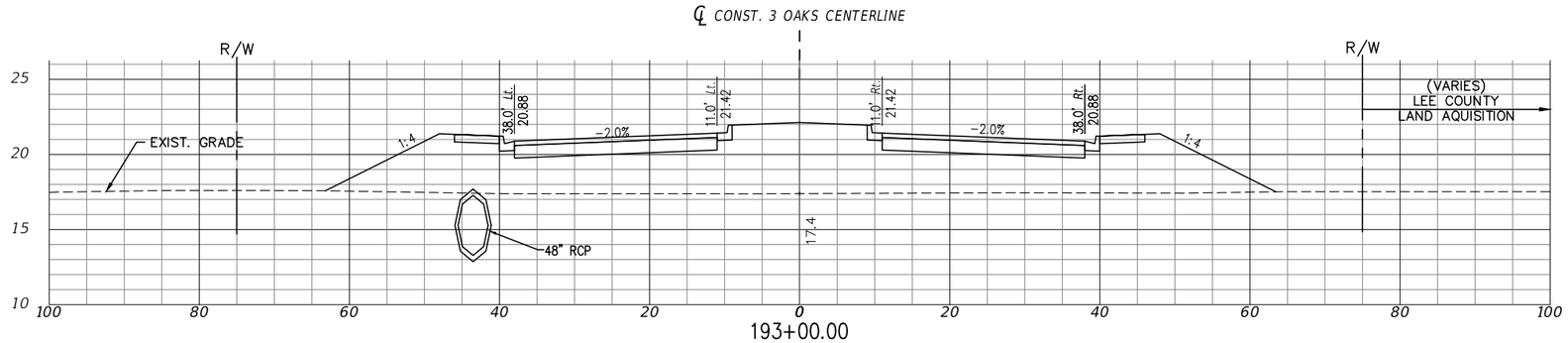

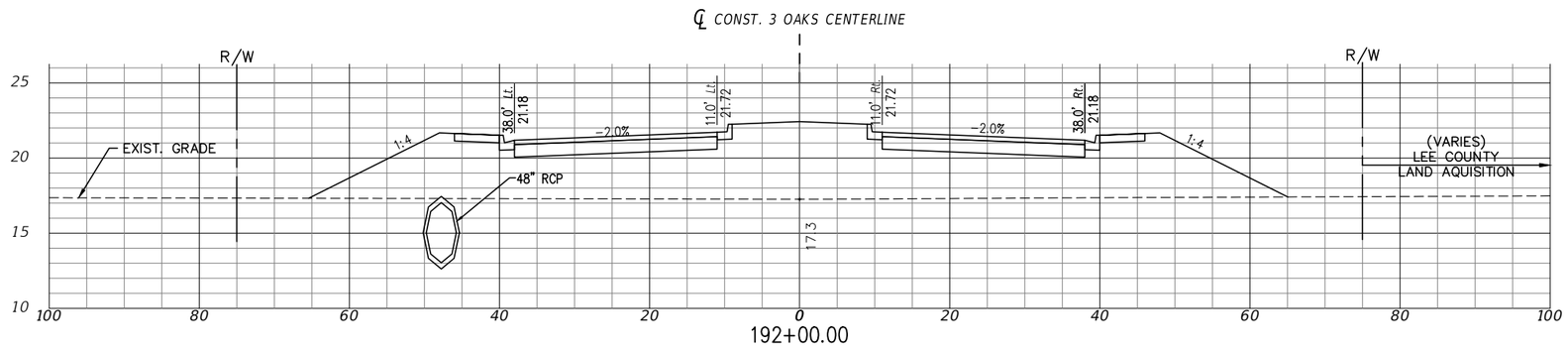

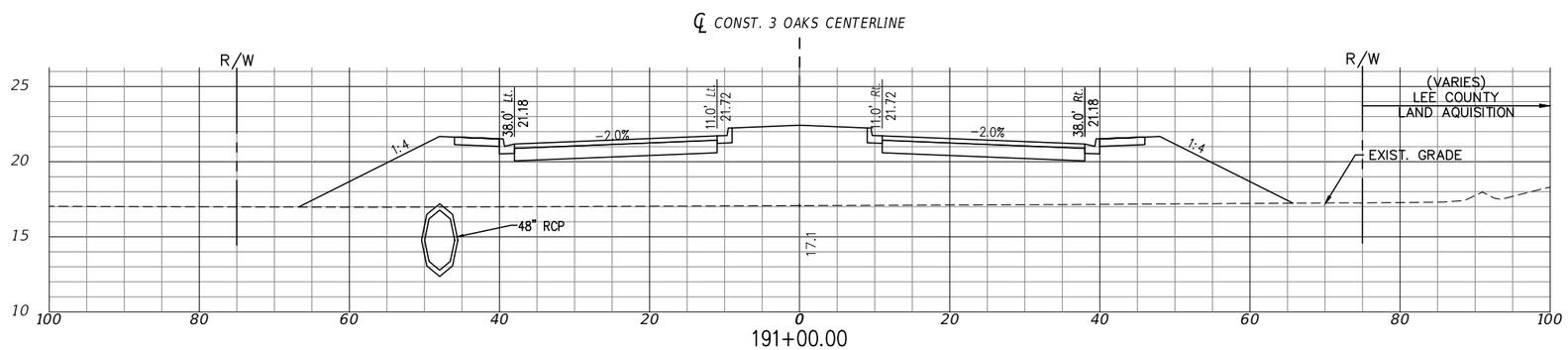

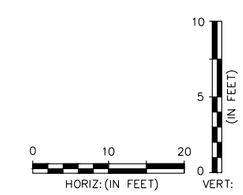

EXC		EMB	
A	V	A	V
0	378	369	68752
0	378	422	67288
0	378	453	65667

P:\CAD\2017\17-372\3-Oaks-Ph1\PLOT_PHASE1\THREE OAKS XSECT_C.dwg, 75 ROADWAY CROSS SECTION, 4/29/2019 3:59:37 PM, Avalon Engineering Inc.

DATE	BY	REVISION DESCRIPTION

AVALON PROJECT: 17-372
PROJ. MGR. Jack Schrager, PE, VP
LEE COUNTY DOT PROJECT: CN160642/ANB
LDOT PROJ. MGR. VINCENT MILLER

AVALON ENGINEERING, INC.
2503 DEL PRADO BLVD, SUITE 200
CAPE CORAL, FLORIDA 33904
FBPE#3128 (239) 573-2077

LEE COUNTY DEPARTMENT OF TRANSPORTATION
(239) 533-8580

THREE OAKS PARKWAY EXTENSION
PHASE 1: FIDDLESTICKS CANAL TO STA 265+20
LEE COUNTY, FLORIDA

ROADWAY CROSS SECTION
THREE OAKS PKWY EXT.

NOTE:
1.) ALL EXISTING AND PROPOSED GRADES SHOWN REFER TO N.A.V.D. 1988. TO CONVERT TO N.G.V.D. 1929 ADD 1.18 FT.

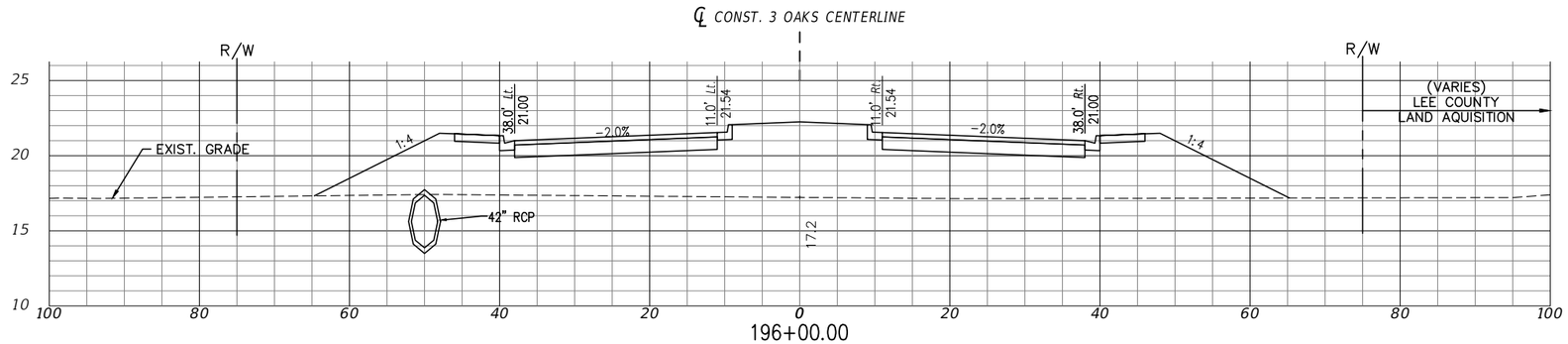

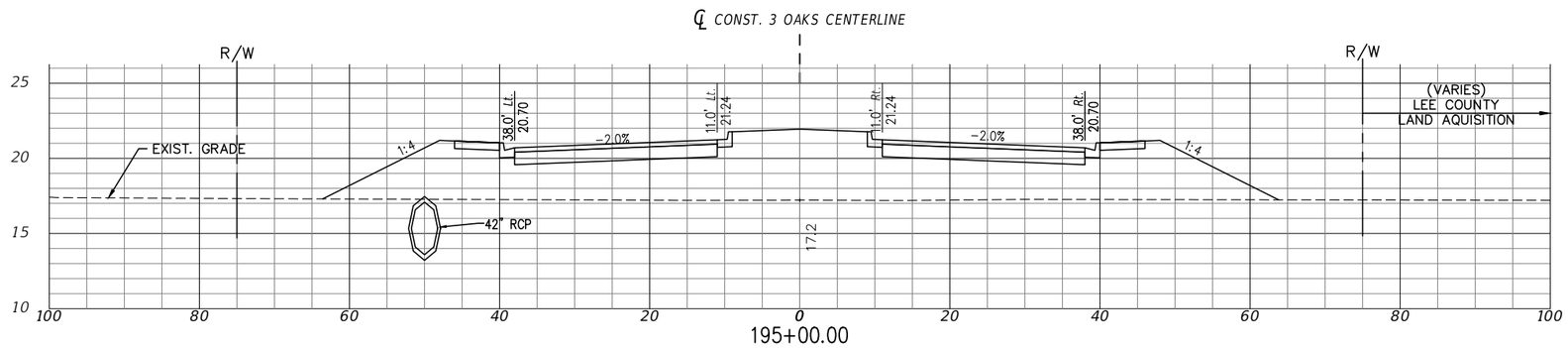

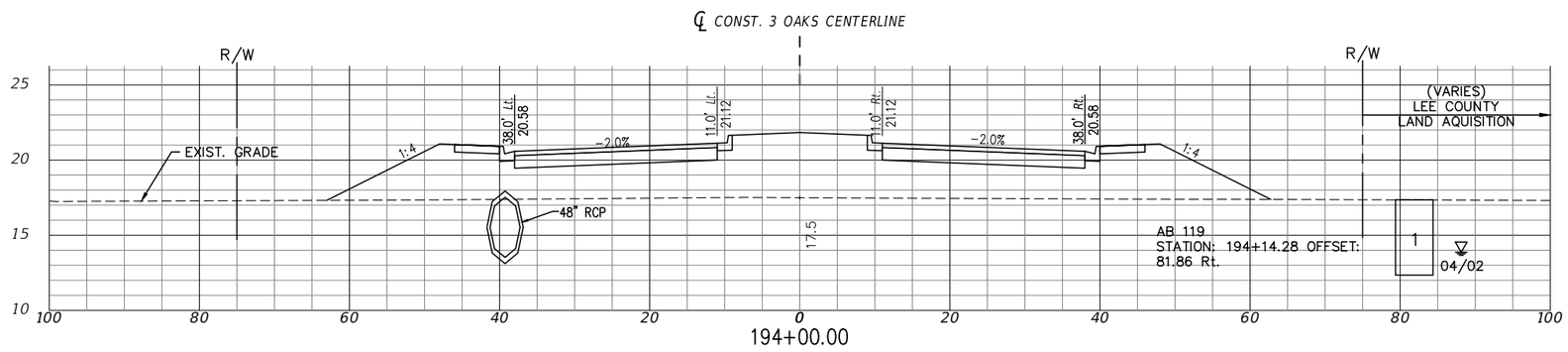

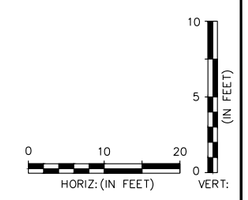

EXC		EMB	
A	V	A	V
0	378	407	72785
0	378	369	71347
0	378	331	70049

DATE	BY	REVISION DESCRIPTION

AVALON PROJECT: 17-372
PROJ. MGR. Jack Schrager, PE, VP
LEE COUNTY DOT PROJECT: CN160642/ANB
LDOT PROJ. MGR. VINCENT MILLER

AVALON ENGINEERING, INC.
2503 DEL PRADO BLVD, SUITE 200
CAPE CORAL, FLORIDA 33904
FBPE#3128 (239) 573-2077

LEE COUNTY DEPARTMENT OF TRANSPORTATION
(239) 533-8580

THREE OAKS PARKWAY EXTENSION
PHASE 1: FIDDLESTICKS CANAL TO STA 265+20
LEE COUNTY, FLORIDA

ROADWAY CROSS SECTION
THREE OAKS PKWY EXT.

SHEET
76 OF 110

P:\CAD\2017\17-372\3-Oaks-Ph1\PLOT_PHASE1\THREE OAKS XSECT_C.dwg, 76 ROADWAY CROSS SECTION, 4/29/2019 3:59:53 PM, Avalon Engineering Inc.

NOTE:
1.) ALL EXISTING AND PROPOSED GRADES SHOWN REFER TO N.A.V.D. 1988. TO CONVERT TO N.G.V.D. 1929 ADD 1.18 FT.

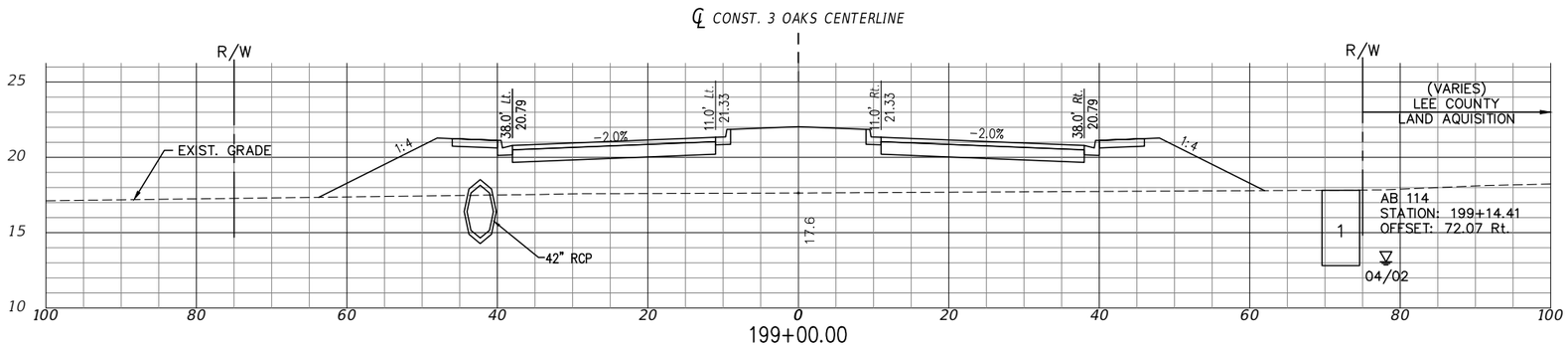

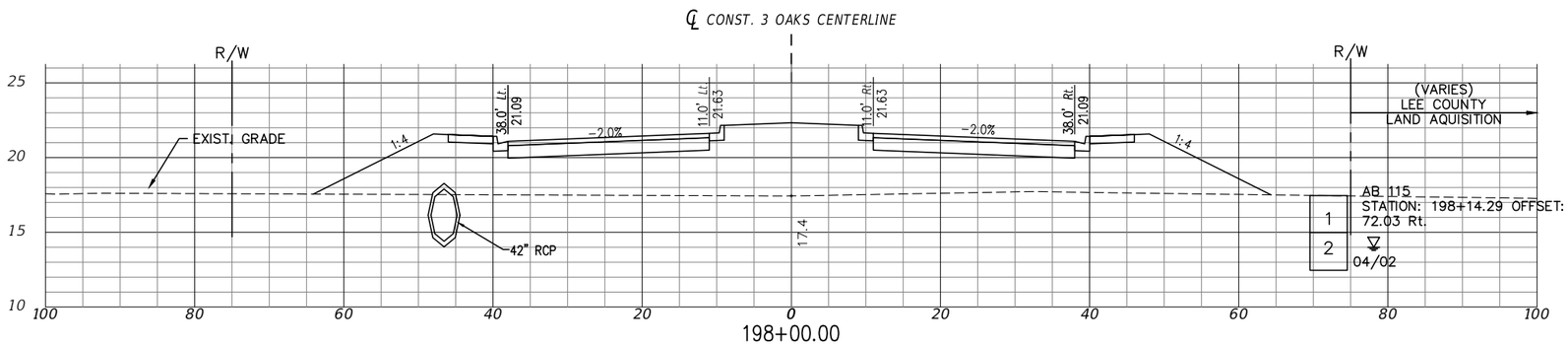

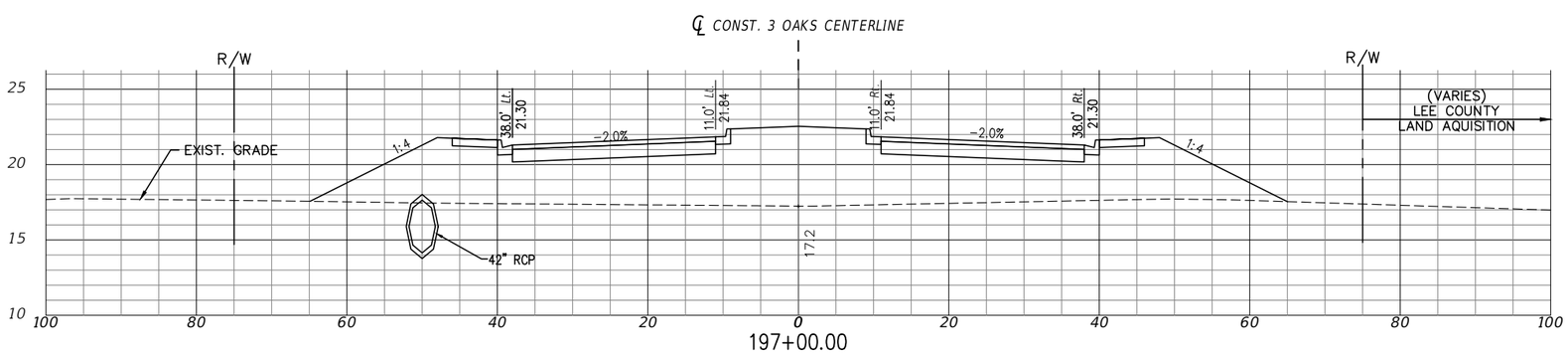

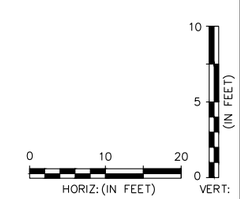

EXC		EMB	
A	V	A	V
0	378	333	77116
0	378	380	75796
0	378	419	74315

DATE	BY	REVISION DESCRIPTION

AVALON PROJECT: 17-372
PROJ. MGR. Jack Schrager, PE, VP
LEE COUNTY DOT PROJECT: CN160642/ANB
LDOT PROJ. MGR. VINCENT MILLER

AVALON ENGINEERING, INC.
2503 DEL PRADO BLVD, SUITE 200
CAPE CORAL, FLORIDA 33904
FBPE#3128 (239) 573-2077

LEE COUNTY DEPARTMENT OF TRANSPORTATION
(239) 533-8580

THREE OAKS PARKWAY EXTENSION
PHASE 1: FIDDLESTICKS CANAL TO STA 265+20
LEE COUNTY, FLORIDA

ROADWAY CROSS SECTION
THREE OAKS PKWY EXT.

SHEET
77 OF 110

P:\CAD\2017\17-372\3-Oaks-Ph1\PLOT_PHASE1\THREE OAKS XSECT_C.dwg, 77 ROADWAY CROSS SECTION, 4/29/2019 4:00:08 PM, Avalon Engineering Inc.

NOTE:
1.) ALL EXISTING AND PROPOSED GRADES SHOWN REFER TO N.A.V.D. 1988. TO CONVERT TO N.G.V.D. 1929 ADD 1.18 FT.

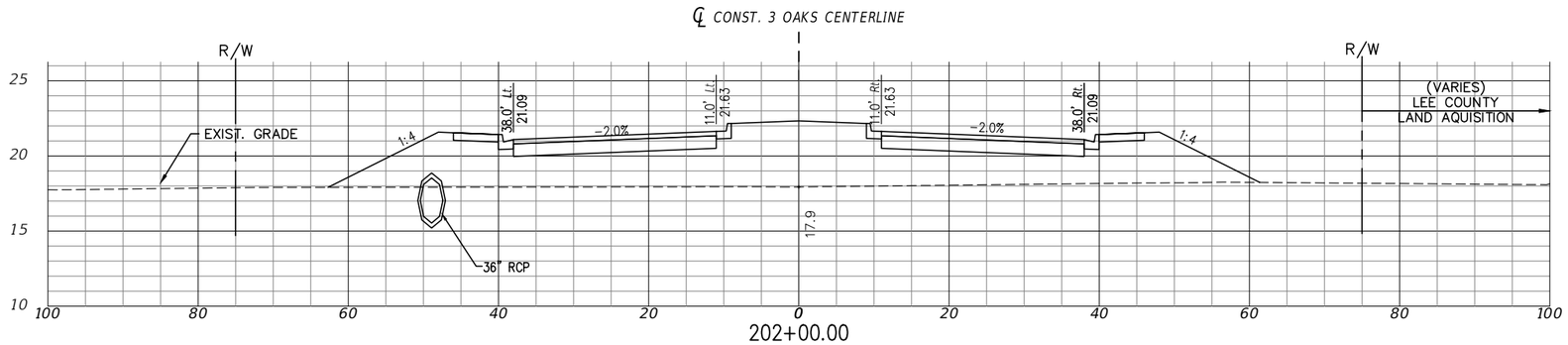

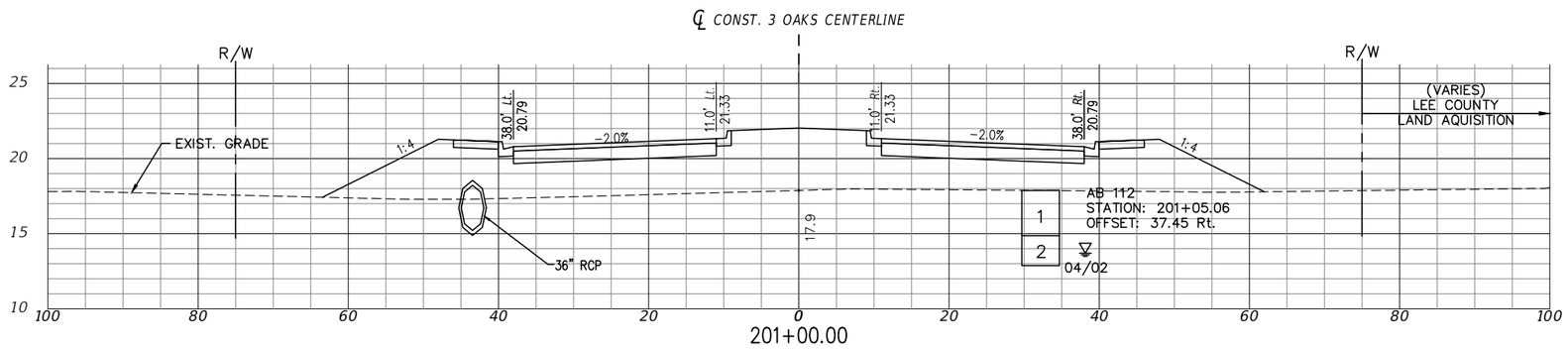

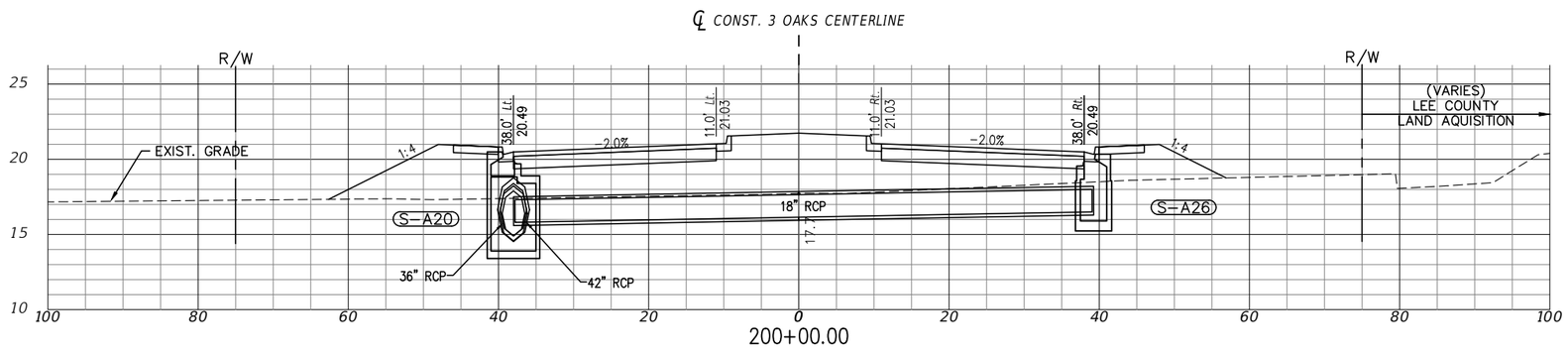

EXC		EMB	
A	V	A	V
0	378	320	80518
0	378	325	79324
0	378	268	78227

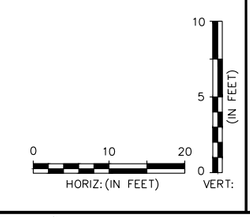

P:\CAD\2017\17-372\3-Oaks-Ph1\PLOT_PHASE1\THREE OAKS XSECT_C.dwg, 78 ROADWAY CROSS SECTION, 4/29/2019 4:00:27 PM, Avalon Engineering Inc.

DATE	BY	REVISION DESCRIPTION

AVALON PROJECT: 17-372
PROJ. MGR. Jack Schrager, PE, VP
LEE COUNTY DOT PROJECT: CN160642/ANB
LDOT PROJ. MGR. VINCENT MILLER

AVALON ENGINEERING, INC.
2503 DEL PRADO BLVD, SUITE 200
CAPE CORAL, FLORIDA 33904
FBPE#3128 (239) 573-2077

LEE COUNTY DEPARTMENT OF TRANSPORTATION
(239) 533-8580

THREE OAKS PARKWAY EXTENSION
PHASE 1: FIDDLESTICKS CANAL TO STA 265+20
LEE COUNTY, FLORIDA

ROADWAY CROSS SECTION
THREE OAKS PKWY EXT.

SHEET
78 of 110

NOTE:
1.) ALL EXISTING AND PROPOSED GRADES SHOWN REFER TO N.A.V.D. 1988. TO CONVERT TO N.G.V.D. 1929 ADD 1.18 FT.

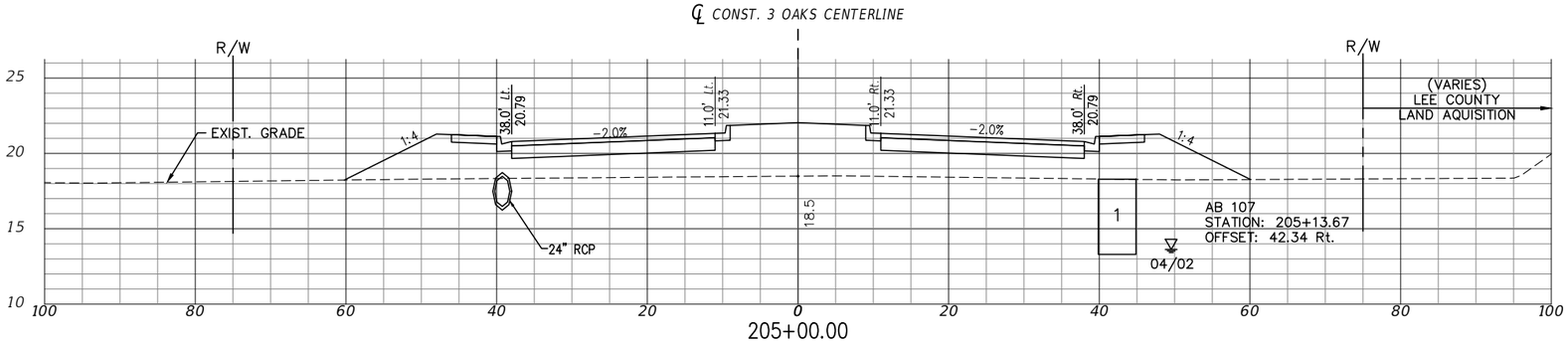

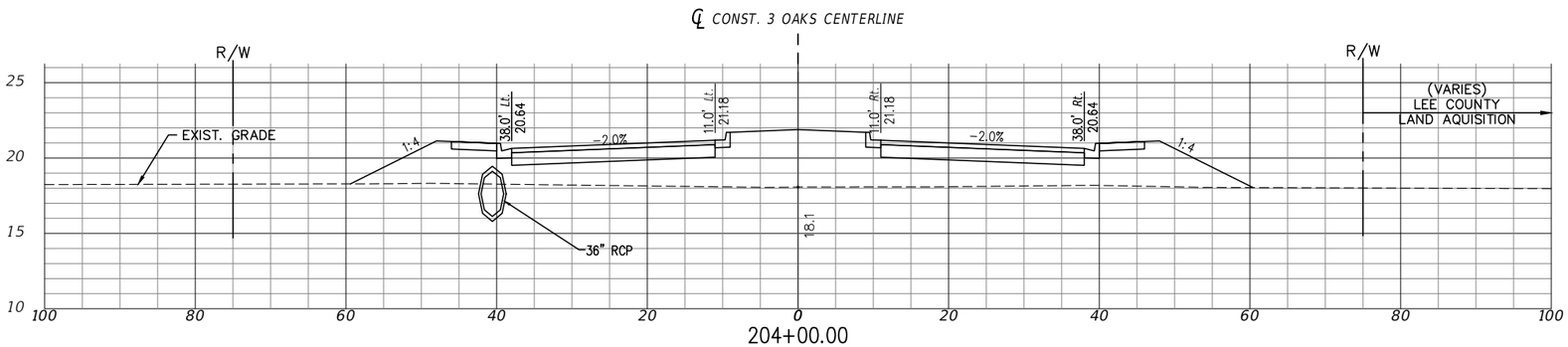

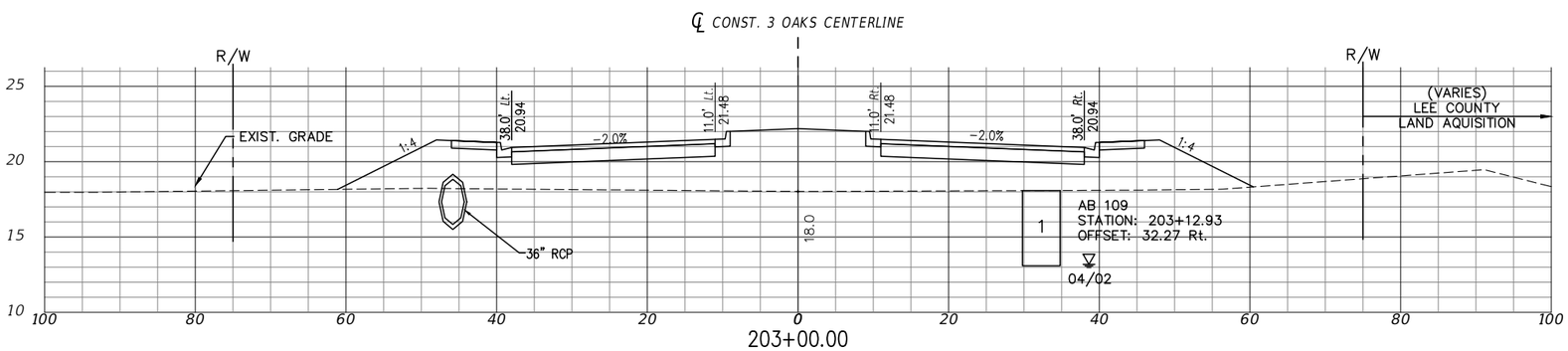

EXC		EMB	
A	V	A	V
0	378	241	83558
0	378	250	82649
0	378	290	81649

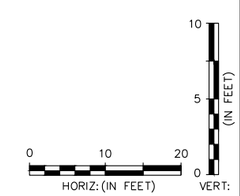

P:\CAD\2017\17-372\3-Oaks-Ph1\PLOT_PHASE1\THREE OAKS XSECT_C.dwg, 79 ROADWAY CROSS SECTION, 4/29/2019 4:00:43 PM, Avalon Engineering Inc.

DATE	BY	REVISION DESCRIPTION

AVALON PROJECT: 17-372
PROJ. MGR. Jack Schrager, PE, VP
LEE COUNTY DOT PROJECT: CN160642/ANB
LDOT PROJ. MGR. VINCENT MILLER

AVALON ENGINEERING, INC.
2503 DEL PRADO BLVD, SUITE 200
CAPE CORAL, FLORIDA 33904
FBPE#3128 (239) 573-2077

LEE COUNTY DEPARTMENT OF TRANSPORTATION
(239) 533-8580

THREE OAKS PARKWAY EXTENSION
PHASE 1: FIDDLESTICKS CANAL TO STA 265+20
LEE COUNTY, FLORIDA

ROADWAY CROSS SECTION
THREE OAKS PKWY EXT.

NOTE:
1.) ALL EXISTING AND PROPOSED GRADES SHOWN REFER TO N.A.V.D. 1988. TO CONVERT TO N.G.V.D. 1929 ADD 1.18 FT.

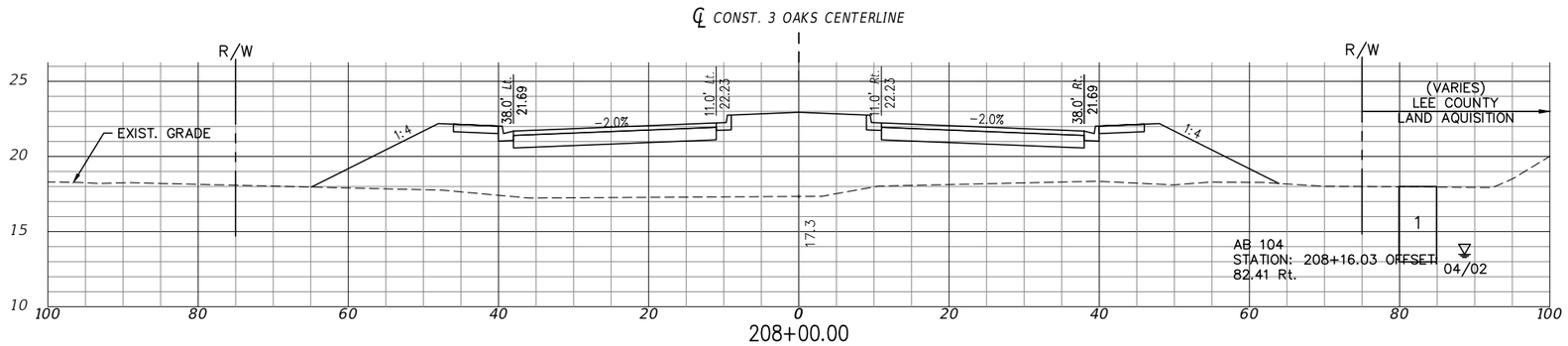

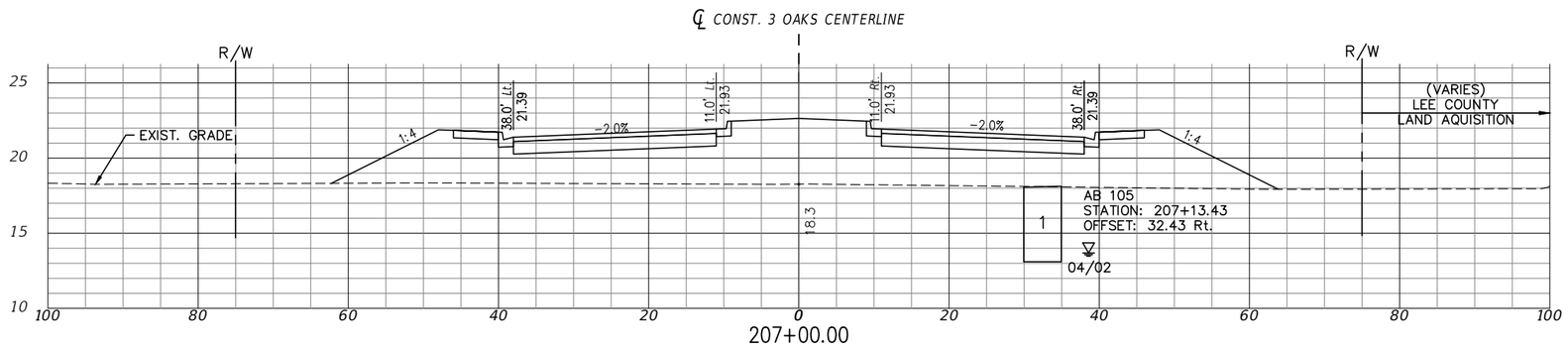

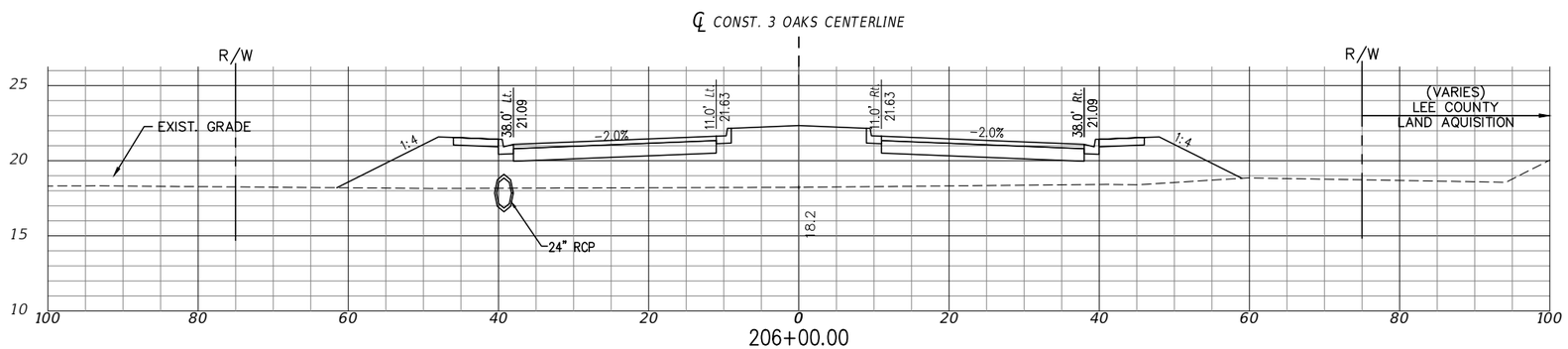

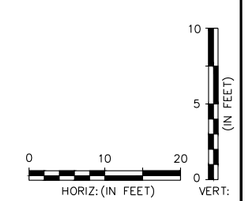

EXC		EMB	
A	V	A	V
0	378	426	87096
0	378	335	85686
0	378	286	84535

P:\CAD\2017\17-372\3-Oaks-Ph1\PLOT_PHASE1\THREE OAKS XSECT_C.dwg, 80 ROADWAY CROSS SECTION, 4/29/2019 4:00:58 PM, Avalon Engineering Inc.

DATE	BY	REVISION DESCRIPTION

AVALON PROJECT: 17-372
PROJ. MGR. Jack Schrager, PE, VP
LEE COUNTY DOT PROJECT: CN160642/ANB
LDOT PROJ. MGR. VINCENT MILLER

AVALON ENGINEERING, INC.
2503 DEL PRADO BLVD, SUITE 200
CAPE CORAL, FLORIDA 33904
FBPE#3128 (239) 573-2077

LEE COUNTY DEPARTMENT OF TRANSPORTATION
(239) 533-8580

THREE OAKS PARKWAY EXTENSION
PHASE 1: FIDDLESTICKS CANAL TO STA 265+20
LEE COUNTY, FLORIDA

ROADWAY CROSS SECTION
THREE OAKS PKWY EXT.

SHEET
80 of 110

NOTE:
1.) ALL EXISTING AND PROPOSED GRADES SHOWN REFER TO N.A.V.D. 1988. TO CONVERT TO N.G.V.D. 1929 ADD 1.18 FT.

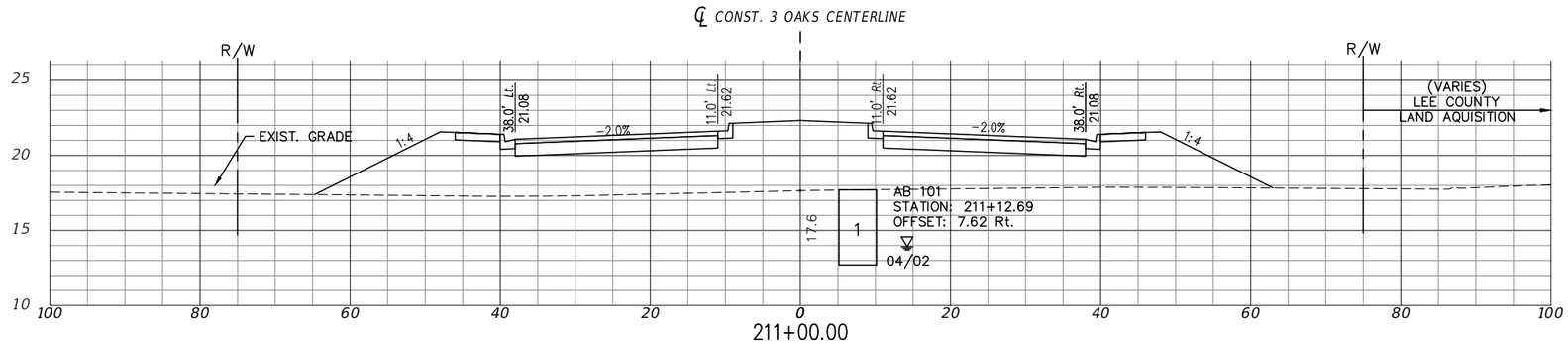

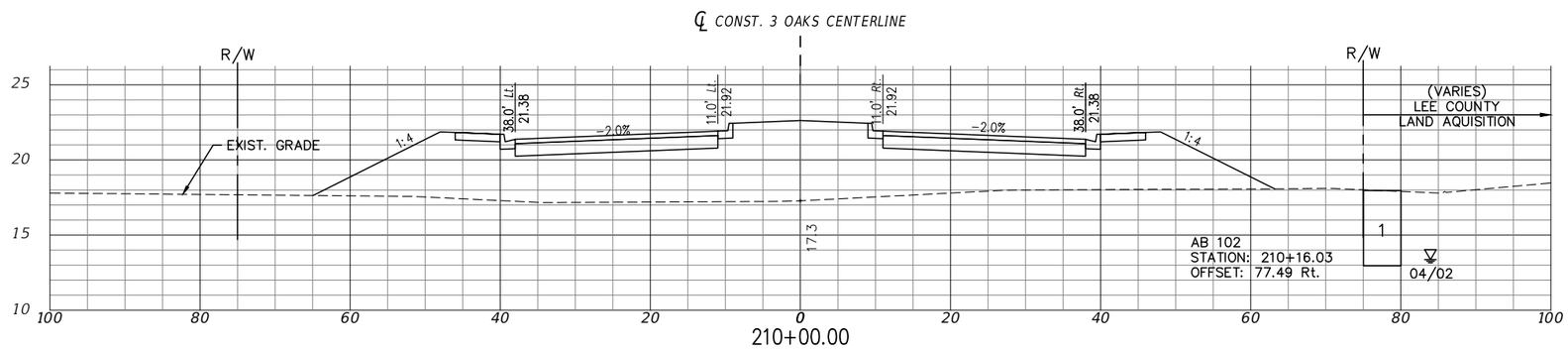

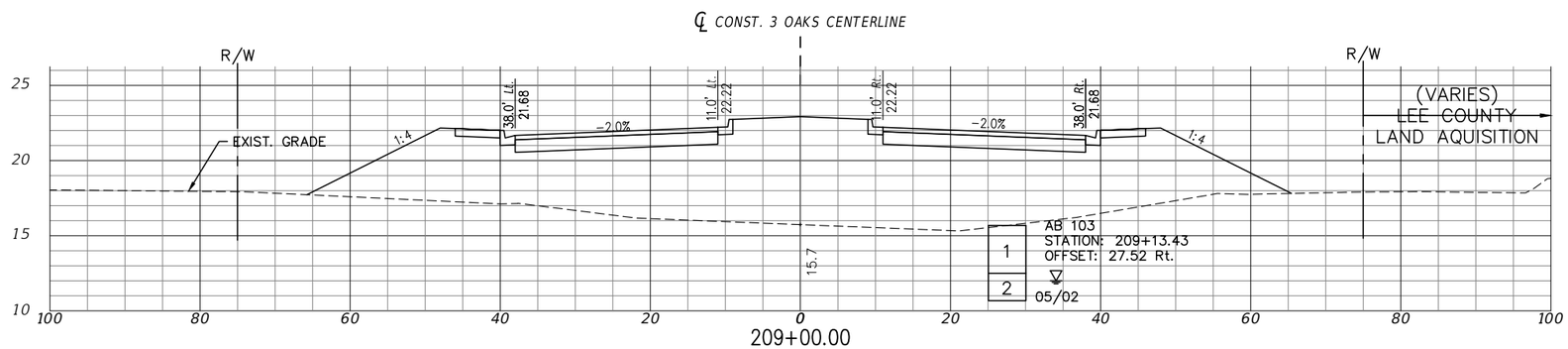

EXC		EMB	
A	V	A	V
0	378	373	92273
0	378	411	90822
0	378	588	88974

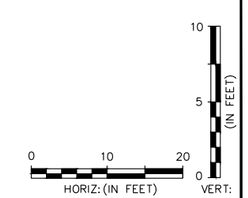

P:\CAD\2017\17-372\3-Oaks-Ph1\PLOT_PHASE1\THREE OAKS XSECT_C.dwg, 81 ROADWAY CROSS SECTION, 4/29/2019 4:01:13 PM, Avalon Engineering Inc.

DATE	BY	REVISION DESCRIPTION

AVALON PROJECT: 17-372
PROJ. MGR. Jack Schrager, PE, VP
LEE COUNTY DOT PROJECT: CN160642/ANB
LDOT PROJ. MGR. VINCENT MILLER

AVALON ENGINEERING, INC.
2503 DEL PRADO BLVD, SUITE 200
CAPE CORAL, FLORIDA 33904
FBPE#3128 (239) 573-2077

LEE COUNTY DEPARTMENT OF TRANSPORTATION
(239) 533-8580

THREE OAKS PARKWAY EXTENSION
PHASE 1: FIDDLESTICKS CANAL TO STA 265+20
LEE COUNTY, FLORIDA

ROADWAY CROSS SECTION
THREE OAKS PKWY EXT.

SHEET
81 OF 110

NOTE:
1.) ALL EXISTING AND PROPOSED GRADES SHOWN REFER TO N.A.V.D. 1988. TO CONVERT TO N.G.V.D. 1929 ADD 1.18 FT.

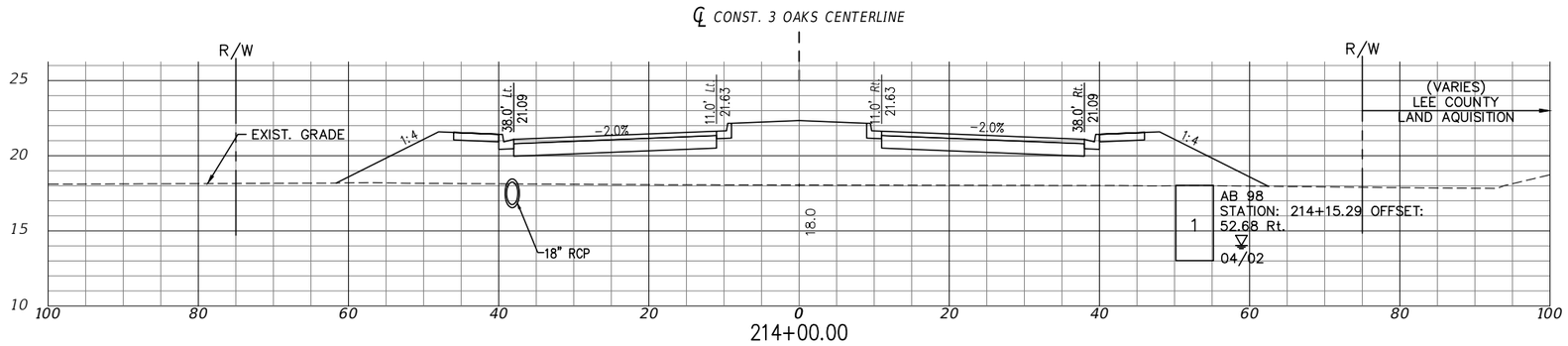

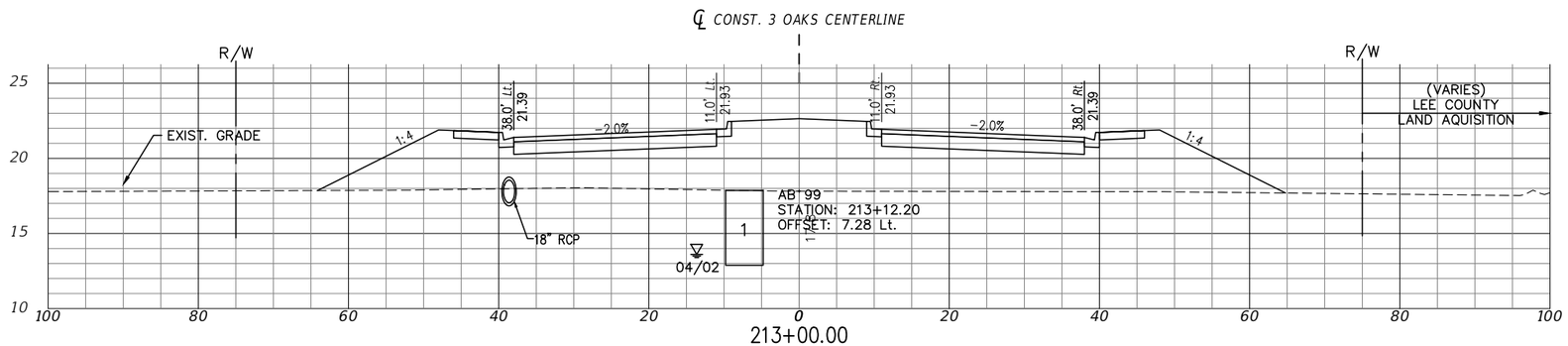

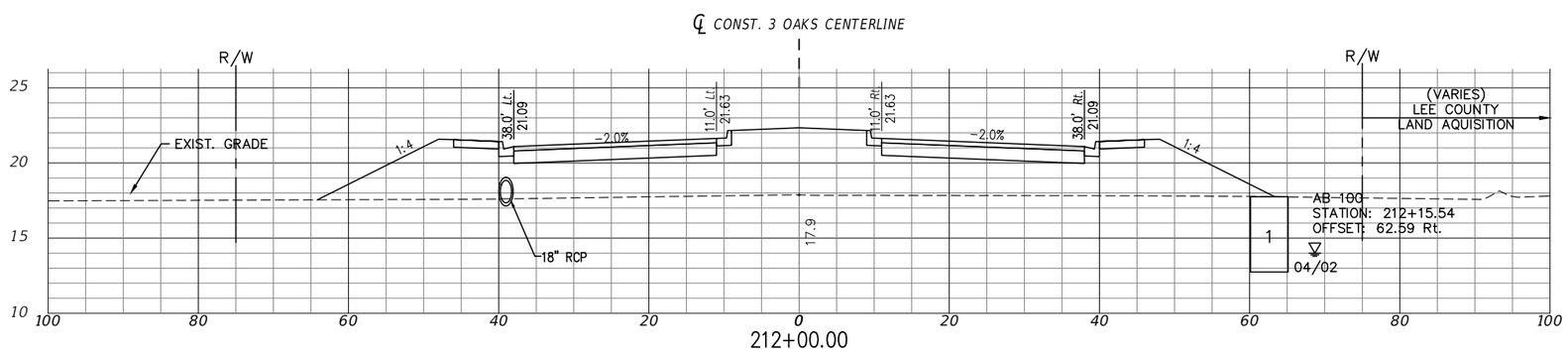

EXC		EMB	
A	V	A	V
0	378	315	96266
0	378	380	94979
0	378	354	93620

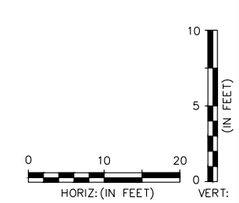

P:\CAD\2017\17-372\3-Oaks-Ph1\PLOT_PHASE1\THREE OAKS XSECT_C.dwg, 82 ROADWAY CROSS SECTION, 4/29/2019 4:01:34 PM, Avalon Engineering Inc.

DATE	BY	REVISION DESCRIPTION

AVALON PROJECT: 17-372
PROJ. MGR. Jack Schrager, PE, VP
LEE COUNTY DOT PROJECT: CN160642/ANB
LDOT PROJ. MGR. VINCENT MILLER

AVALON ENGINEERING, INC.
2503 DEL PRADO BLVD, SUITE 200
CAPE CORAL, FLORIDA 33904
FBPE#3128 (239) 573-2077

LEE COUNTY DEPARTMENT OF TRANSPORTATION
(239) 533-8580

THREE OAKS PARKWAY EXTENSION
PHASE 1: FIDDLESTICKS CANAL TO STA 265+20
LEE COUNTY, FLORIDA

ROADWAY CROSS SECTION
THREE OAKS PKWY EXT.

NOTE:
1.) ALL EXISTING AND PROPOSED GRADES SHOWN REFER TO N.A.V.D. 1988. TO CONVERT TO N.G.V.D. 1929 ADD 1.18 FT.

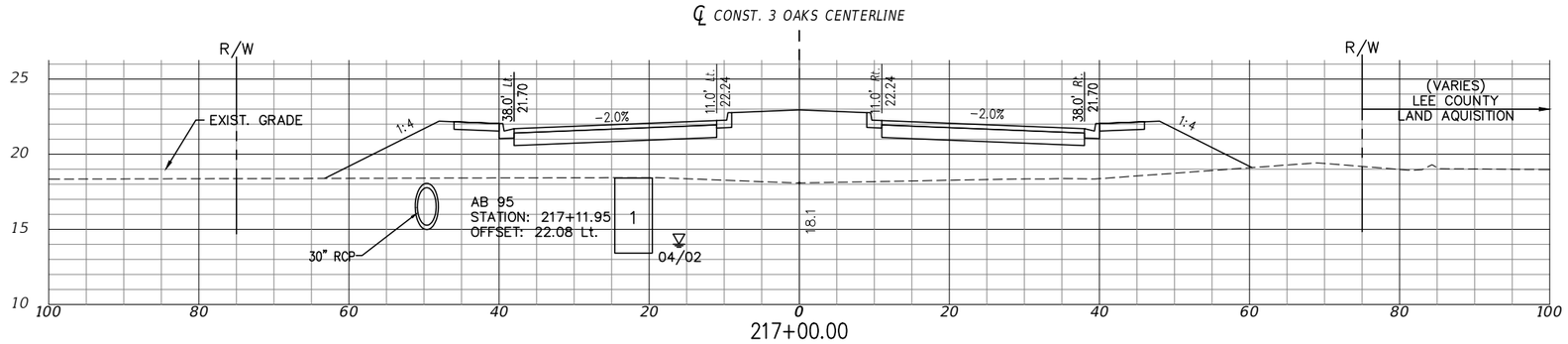

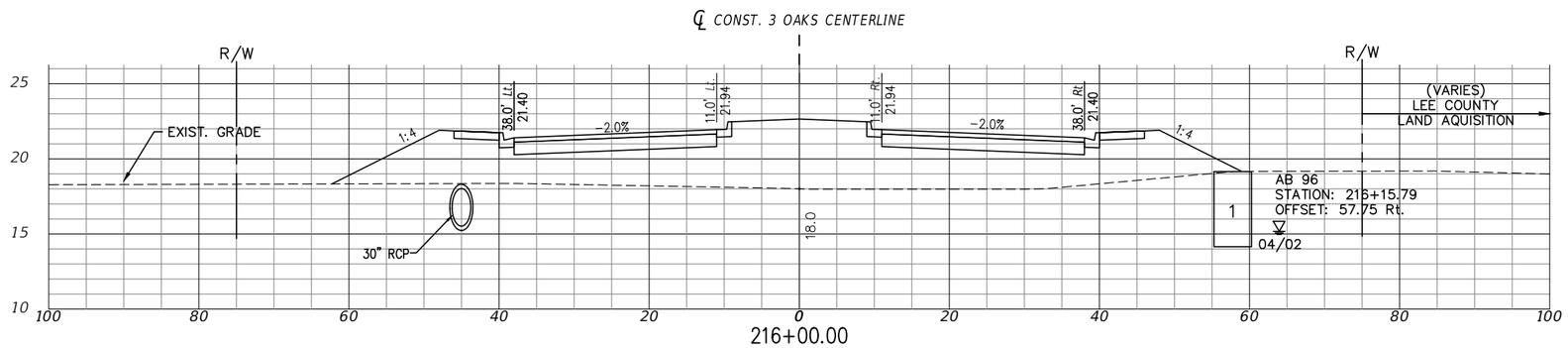

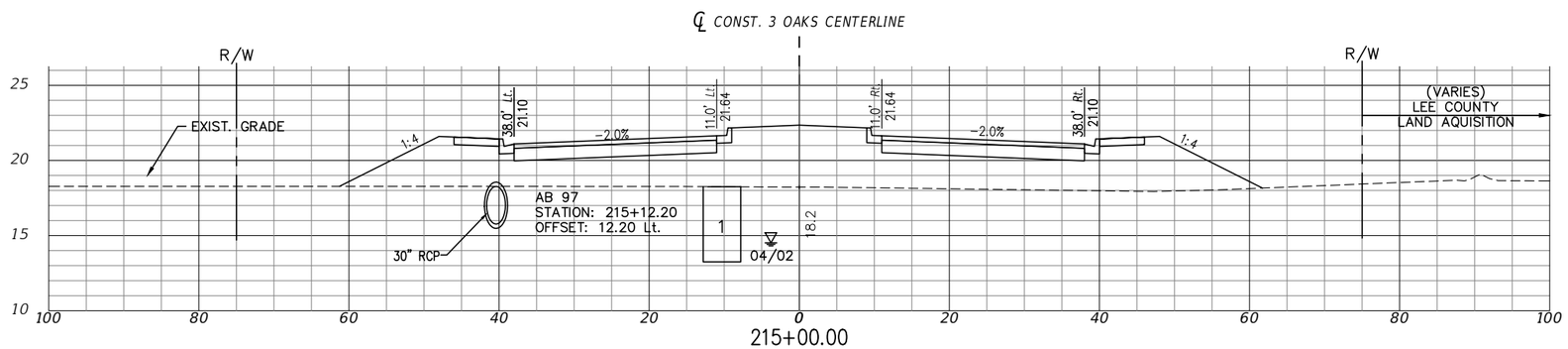

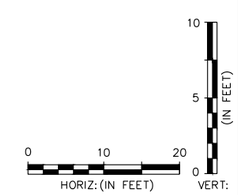

EXC		EMB	
A	V	A	V
0	378	349	99835
0	378	328	98580
0	378	303	97411

DATE	BY	REVISION DESCRIPTION

AVALON PROJECT: 17-372
PROJ. MGR. Jack Schrager, PE, VP
LEE COUNTY DOT PROJECT: CN160642/ANB
LDOT PROJ. MGR. VINCENT MILLER

AVALON ENGINEERING, INC.
2503 DEL PRADO BLVD. SUITE 200
CAPE CORAL, FLORIDA 33904
FBPE#3128 (239) 573-2077

LEE COUNTY DEPARTMENT OF TRANSPORTATION
(239) 533-8580

THREE OAKS PARKWAY EXTENSION
PHASE 1: FIDDLESTICKS CANAL TO STA 265+20
LEE COUNTY, FLORIDA

ROADWAY CROSS SECTION
THREE OAKS PKWY EXT.

SHEET 83 OF 110

P:\CAD\2017\17-372\3-Oaks-Ph1\PLOT_PHASE1\THREE OAKS XSECT_D.dwg, 83 ROADWAY CROSS SECTION, 4/29/2019 4:02:29 PM, Avalon Engineering Inc.

NOTE:
1.) ALL EXISTING AND PROPOSED GRADES SHOWN REFER TO N.A.V.D. 1988. TO CONVERT TO N.G.V.D. 1929 ADD 1.18 FT.

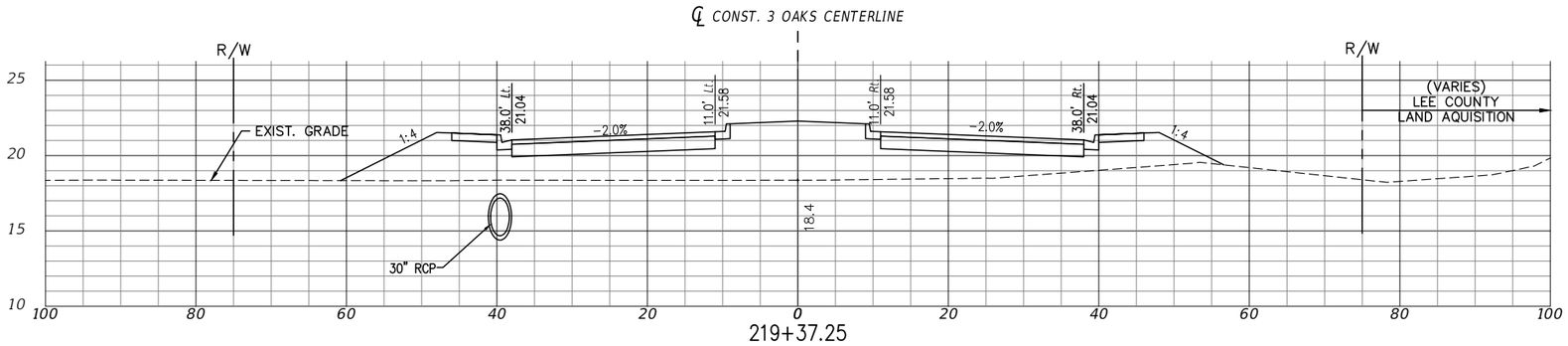

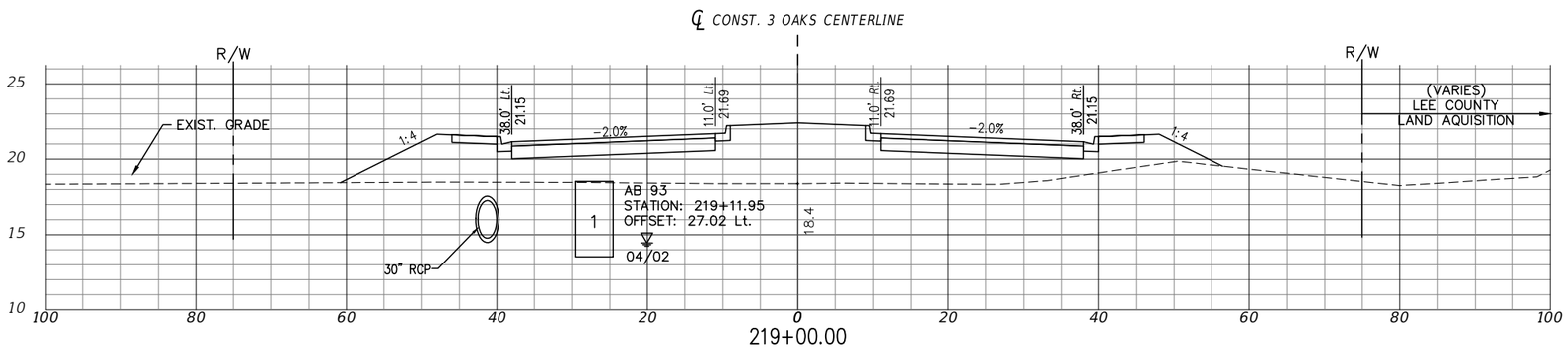

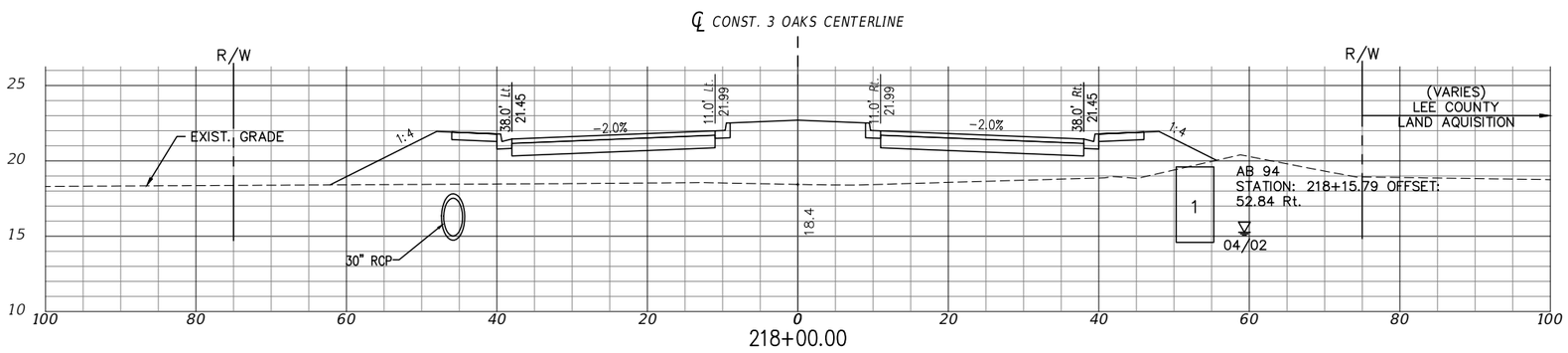

EXC		EMB	
A	V	A	V
0	378	248	102362
0	378	254	102016
0	378	287	101013

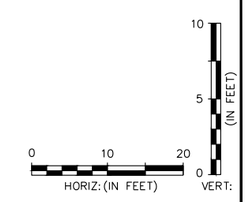

P:\CAD\2017\17-372\3-Oaks-Ph1\PLOT_PHASE1\THREE OAKS XSECT_D.dwg, 84 ROADWAY CROSS SECTION, 4/29/2019 4:02:49 PM, Avalon Engineering Inc.

DATE	BY	REVISION DESCRIPTION

AVALON PROJECT: 17-372
PROJ. MGR. Jack Schrager, PE, VP
LEE COUNTY DOT PROJECT: CN160642/ANB
LDOT PROJ. MGR. VINCENT MILLER

AVALON ENGINEERING, INC.
2503 DEL PRADO BLVD, SUITE 200
CAPE CORAL, FLORIDA 33904
FBPE#3128 (239) 573-2077

LEE COUNTY DEPARTMENT OF TRANSPORTATION
(239) 533-8580

THREE OAKS PARKWAY EXTENSION
PHASE 1: FIDDLESTICKS CANAL TO STA 265+20
LEE COUNTY, FLORIDA

ROADWAY CROSS SECTION
THREE OAKS PKWY EXT.

NOTE:
1.) ALL EXISTING AND PROPOSED GRADES SHOWN REFER TO N.A.V.D. 1988. TO CONVERT TO N.G.V.D. 1929 ADD 1.18 FT.

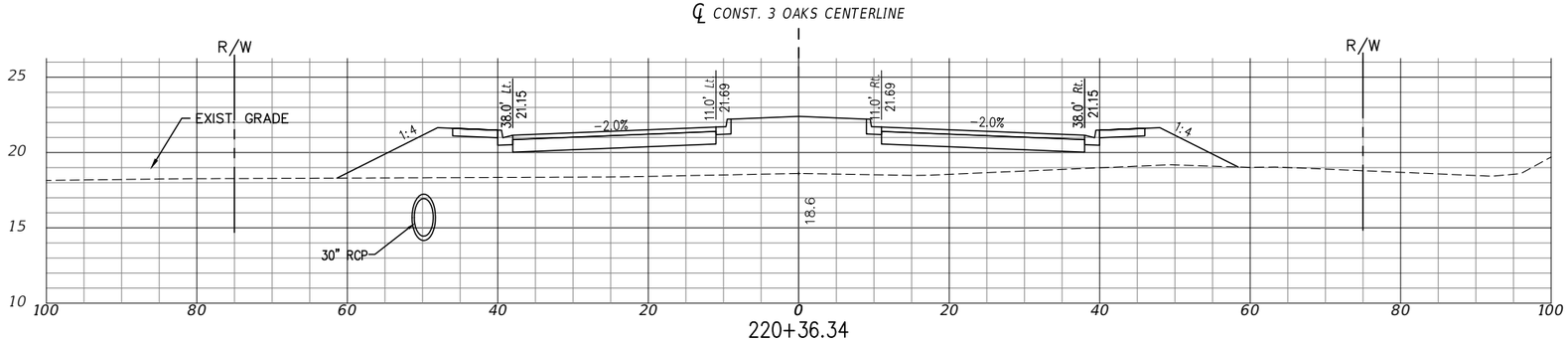

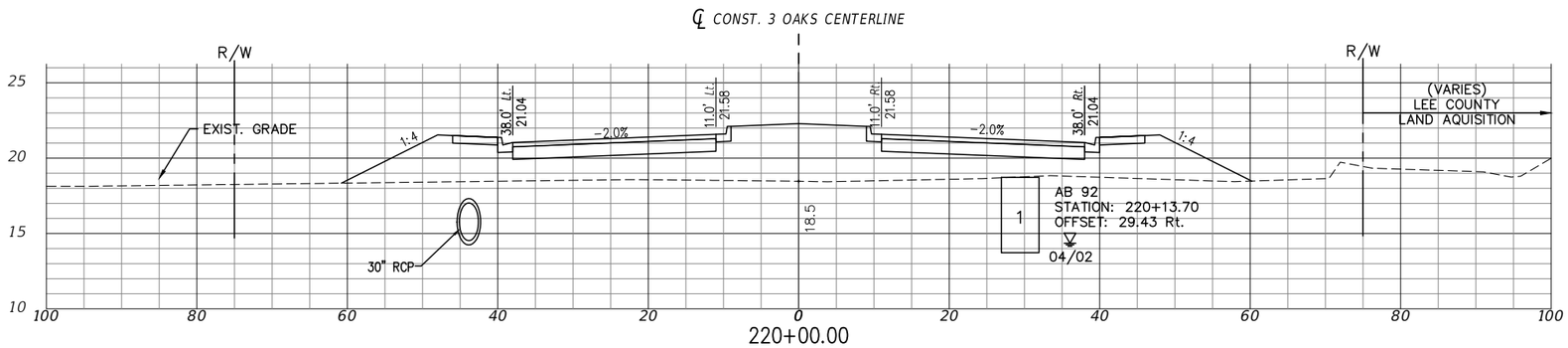

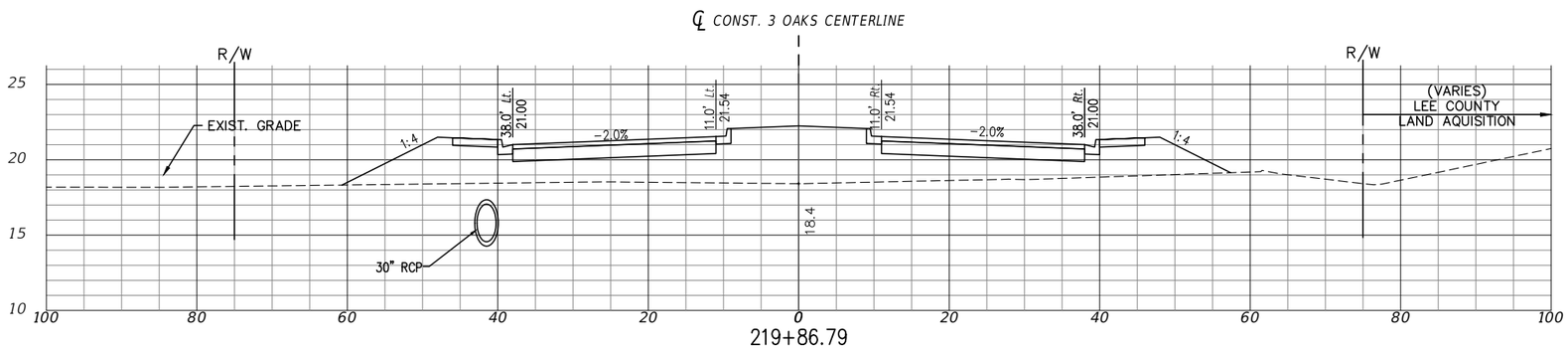

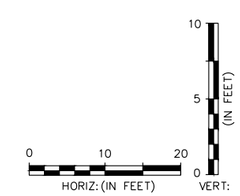

EXC		EMB	
A	V	A	V
0	378	257	103270
0	378	251	102929
0	378	240	102809

P:\CAD\2017\17-372\3-Oaks-Ph1\PLOT_PHASE1\THREE OAKS XSECT_D.dwg, 85 ROADWAY CROSS SECTION, 4/29/2019 4:03:08 PM, Avalon Engineering Inc.

DATE	BY	REVISION DESCRIPTION

AVALON PROJECT: 17-372
PROJ. MGR. Jack Schrager, PE, VP
LEE COUNTY DOT PROJECT: CN160642/ANB
LDOT PROJ. MGR. VINCENT MILLER

AVALON ENGINEERING, INC.
2503 DEL PRADO BLVD, SUITE 200
CAPE CORAL, FLORIDA 33904
FBPE#3128 (239) 573-2077

LEE COUNTY DEPARTMENT OF TRANSPORTATION
(239) 533-8580

THREE OAKS PARKWAY EXTENSION
PHASE 1: FIDDLESTICKS CANAL TO STA 265+20
LEE COUNTY, FLORIDA

ROADWAY CROSS SECTION
THREE OAKS PKWY EXT.

SHEET 85 OF 110

NOTE:
1.) ALL EXISTING AND PROPOSED GRADES SHOWN REFER TO N.A.V.D. 1988. TO CONVERT TO N.G.V.D. 1929 ADD 1.18 FT.

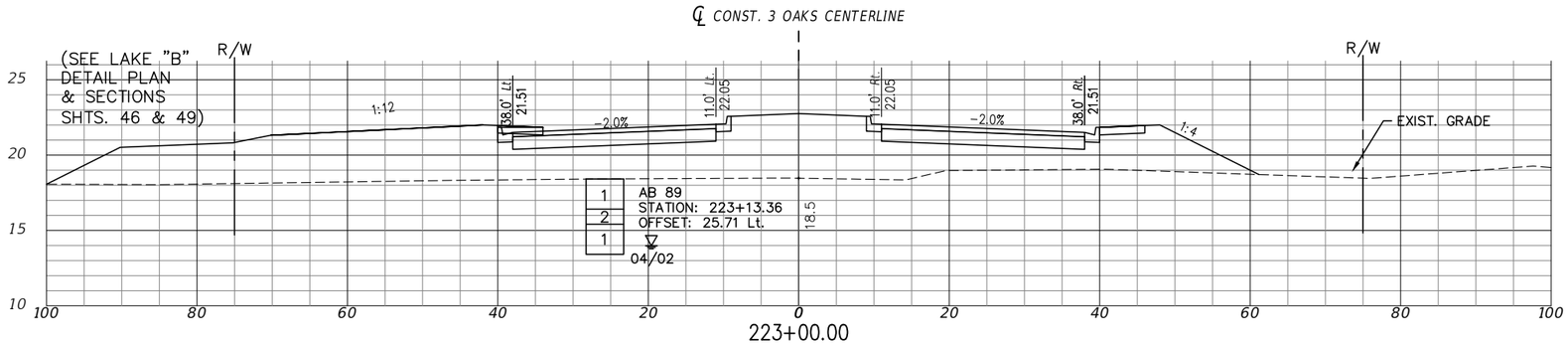

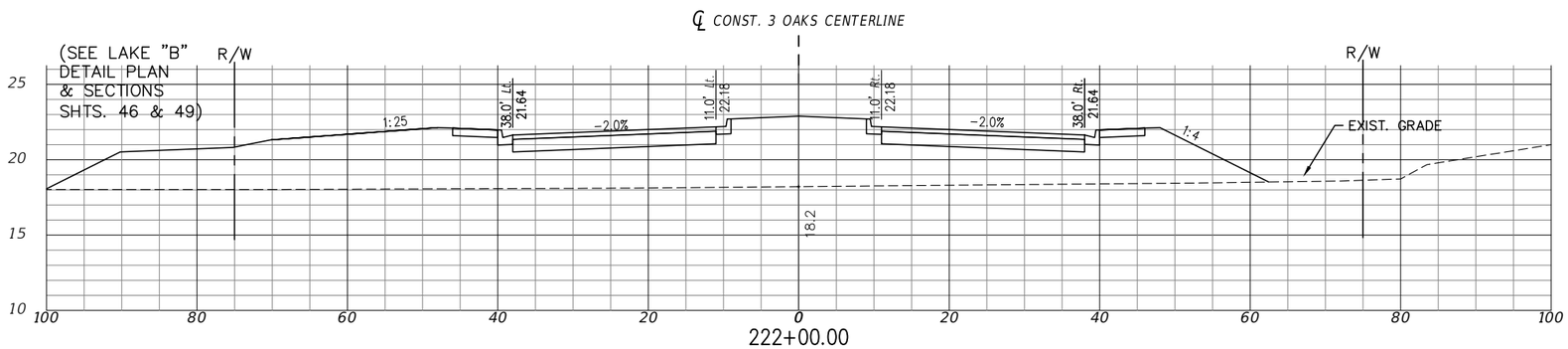

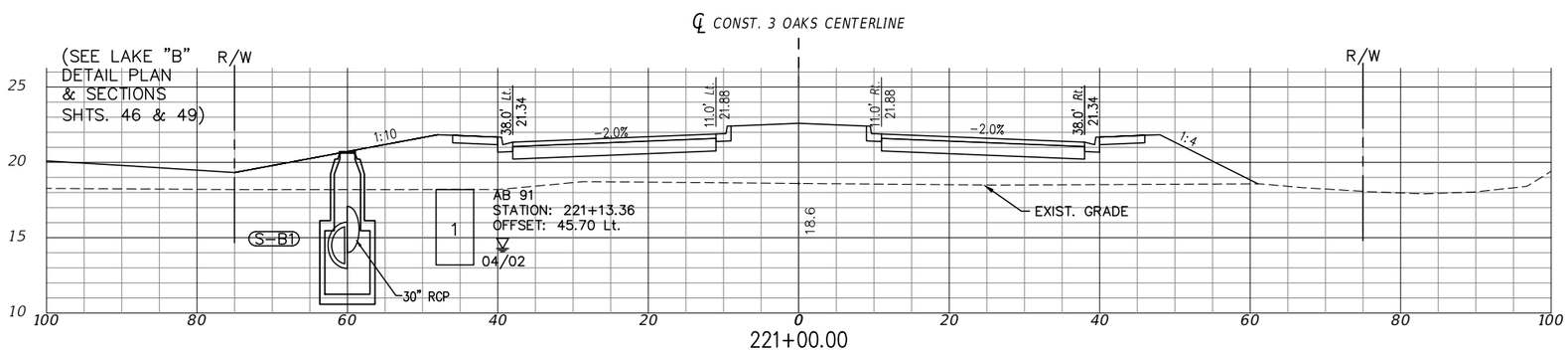

EXC		EMB	
A	V	A	V
0	378	359	106763
0	378	411	105336
0	378	330	103963

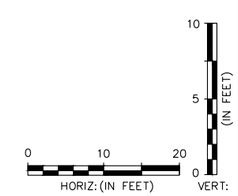

P:\CAD\2017\17-372\3-Oaks-Ph1\PLOT_PHASE1\THREE OAKS XSECT_D.dwg, 86 ROADWAY CROSS SECTION, 4/29/2019 4:03:23 PM, Avalon Engineering Inc.

DATE	BY	REVISION DESCRIPTION

AVALON PROJECT: 17-372
PROJ. MGR. Jack Schrager, PE, VP
LEE COUNTY DOT PROJECT: CN160642/ANB
LDOT PROJ. MGR. VINCENT MILLER

AVALON ENGINEERING, INC.
2503 DEL PRADO BLVD, SUITE 200
CAPE CORAL, FLORIDA 33904
FBPE#3128 (239) 573-2077

LEE COUNTY DEPARTMENT OF TRANSPORTATION
(239) 533-8580

THREE OAKS PARKWAY EXTENSION
PHASE 1: FIDDLESTICKS CANAL TO STA 265+20
LEE COUNTY, FLORIDA

ROADWAY CROSS SECTION
THREE OAKS PKWY EXT.

SHEET
86 OF 110

NOTE:
1.) ALL EXISTING AND PROPOSED GRADES SHOWN REFER TO N.A.V.D. 1988. TO CONVERT TO N.G.V.D. 1929 ADD 1.18 FT.

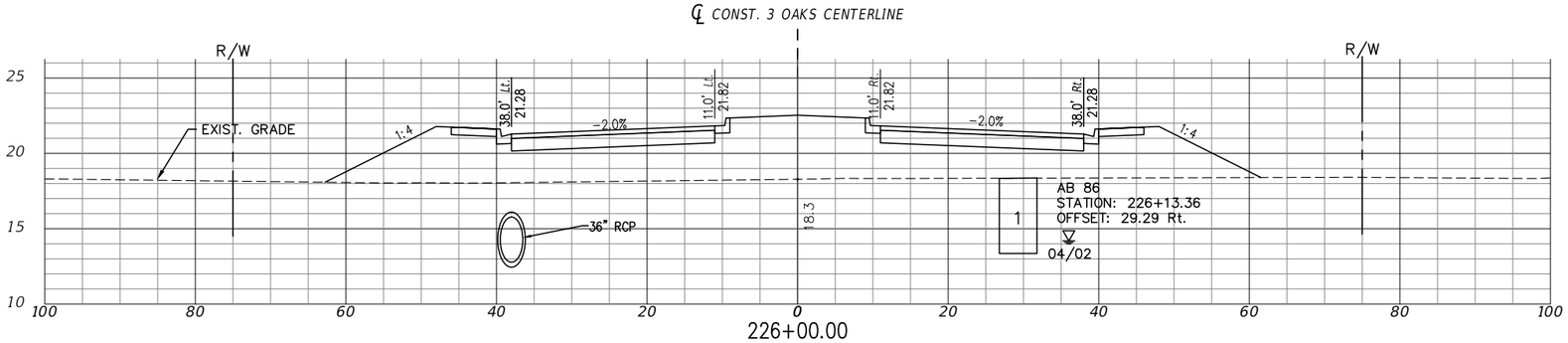

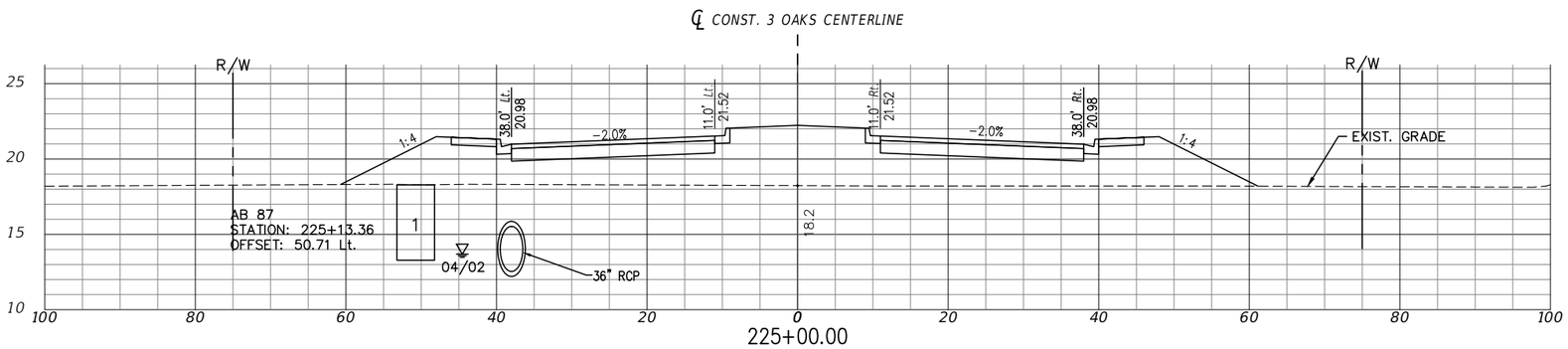

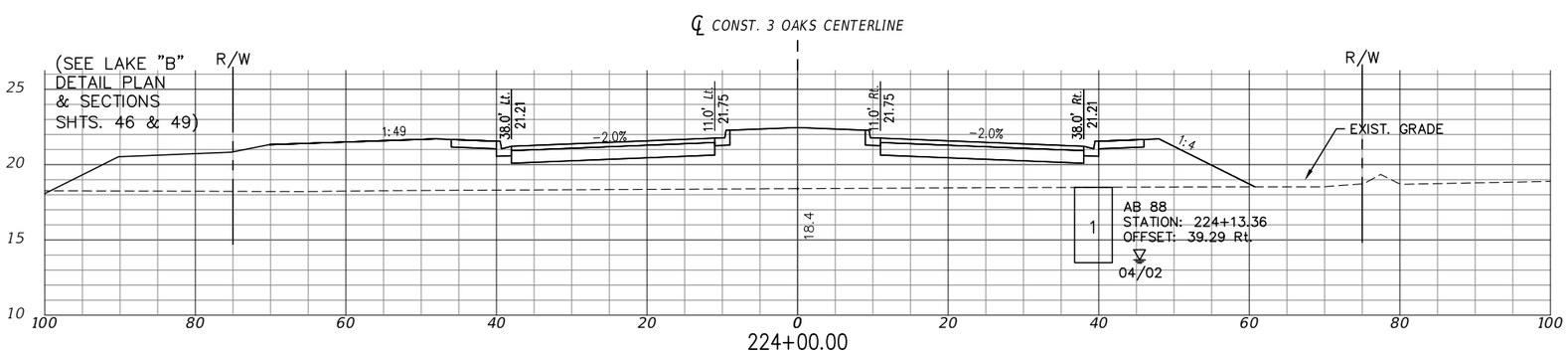

EXC		EMB	
A	V	A	V
0	378	317	110168
0	378	279	109063
0	378	302	107987

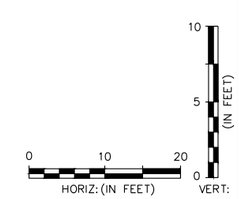

P:\CAD\2017\17-372\3-Oaks-Ph1\PLOT_PHASE1\THREE OAKS XSECT_D.dwg, 87 ROADWAY CROSS SECTION, 4/29/2019 4:03:37 PM, Avalon Engineering Inc.

DATE	BY	REVISION DESCRIPTION

AVALON PROJECT: 17-372
PROJ. MGR. Jack Schrager, PE, VP
LEE COUNTY DOT PROJECT: CN160642/ANB
LDOT PROJ. MGR. VINCENT MILLER

AVALON ENGINEERING, INC.
2503 DEL PRADO BLVD, SUITE 200
CAPE CORAL, FLORIDA 33904
FBPE#3128 (239) 573-2077

LEE COUNTY DEPARTMENT OF TRANSPORTATION
(239) 533-8580

THREE OAKS PARKWAY EXTENSION
PHASE 1: FIDDLESTICKS CANAL TO STA 265+20
LEE COUNTY, FLORIDA

ROADWAY CROSS SECTION
THREE OAKS PKWY EXT.

NOTE:
1.) ALL EXISTING AND PROPOSED GRADES SHOWN REFER TO N.A.V.D. 1988. TO CONVERT TO N.G.V.D. 1929 ADD 1.18 FT.

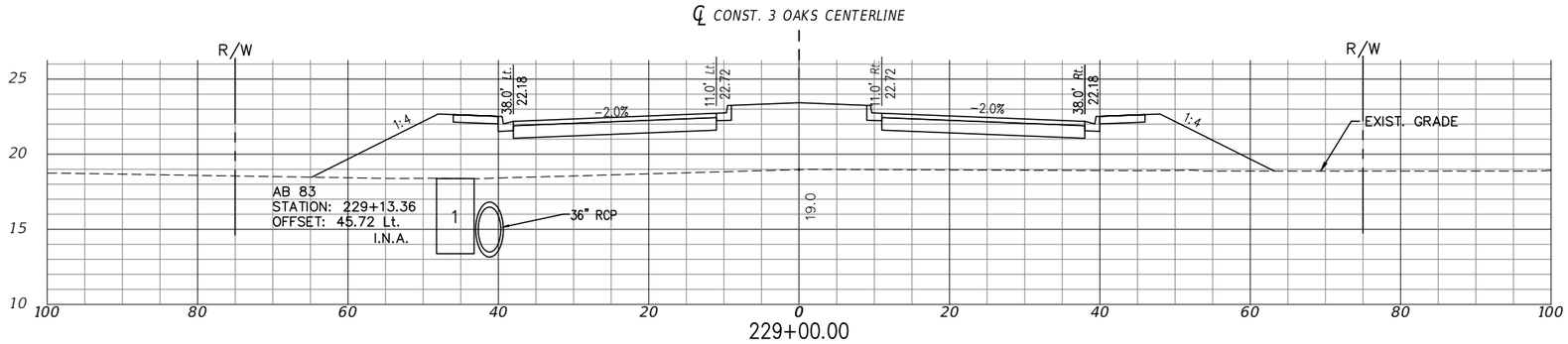

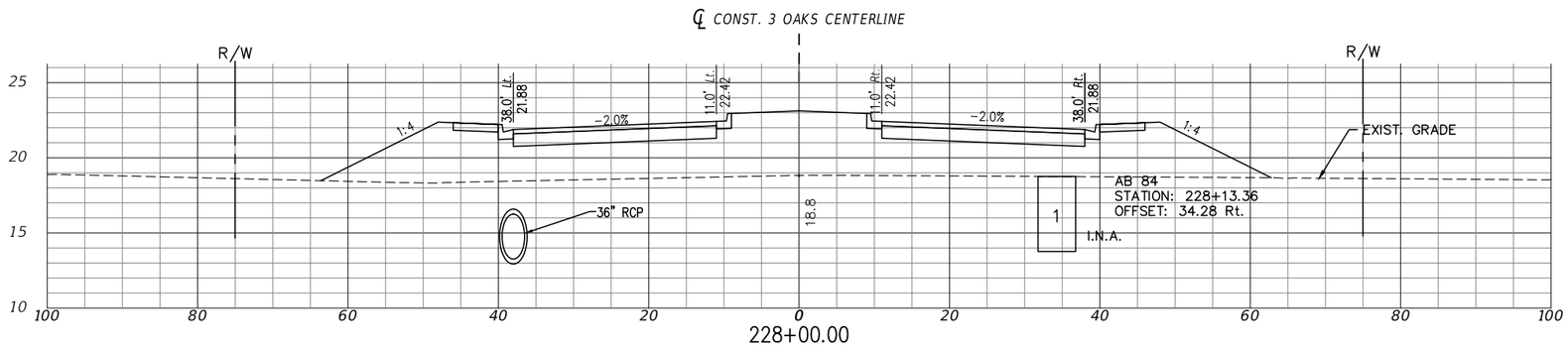

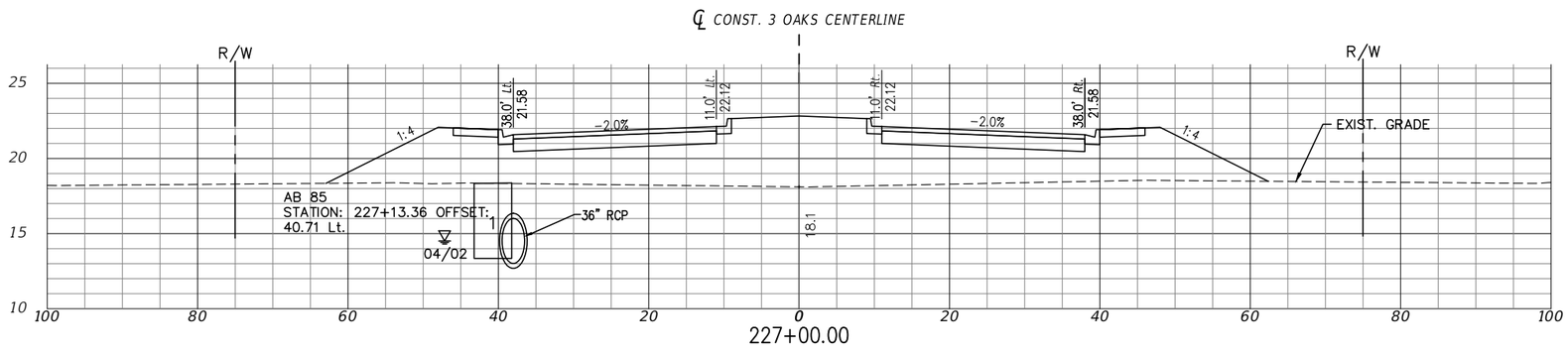

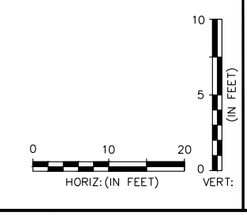

EXC		EMB	
A	V	A	V
0	378	365	113969
0	378	341	112661
0	378	344	111393

DATE	BY	REVISION DESCRIPTION

AVALON PROJECT: 17-372
PROJ. MGR. Jack Schrager, PE, VP
LEE COUNTY DOT PROJECT: CN160642/ANB
LDOT PROJ. MGR. VINCENT MILLER

AVALON ENGINEERING, INC.
2503 DEL PRADO BLVD, SUITE 200
CAPE CORAL, FLORIDA 33904
FBPE#3128 (239) 573-2077

LEE COUNTY DEPARTMENT OF TRANSPORTATION
(239) 533-8580

THREE OAKS PARKWAY EXTENSION
PHASE 1: FIDDLESTICKS CANAL TO STA 265+20
LEE COUNTY, FLORIDA

ROADWAY CROSS SECTION
THREE OAKS PKWY EXT.

P:\CAD\2017\17-372\3-Oaks-Ph1\PLOT_PHASE1\THREE OAKS XSECT_D.dwg, 88 ROADWAY CROSS SECTION, 4/29/2019 4:03:52 PM, Avalon Engineering Inc.

NOTE:
1.) ALL EXISTING AND PROPOSED GRADES SHOWN REFER TO N.A.V.D. 1988. TO CONVERT TO N.G.V.D. 1929 ADD 1.18 FT.

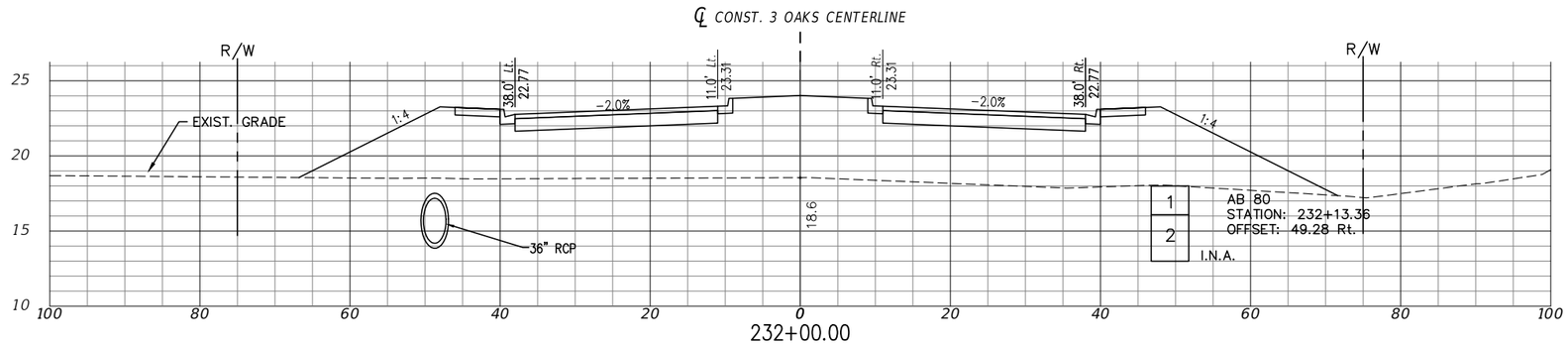

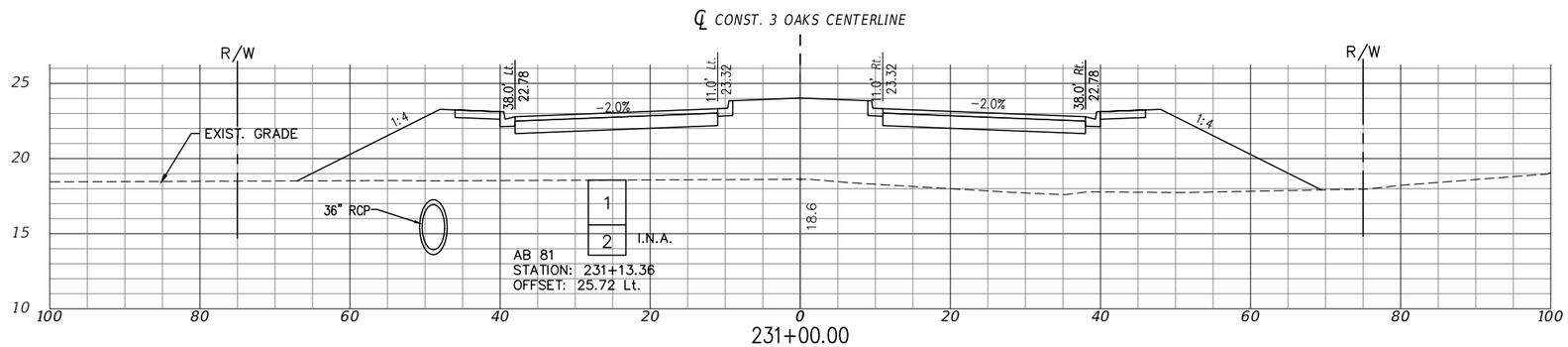

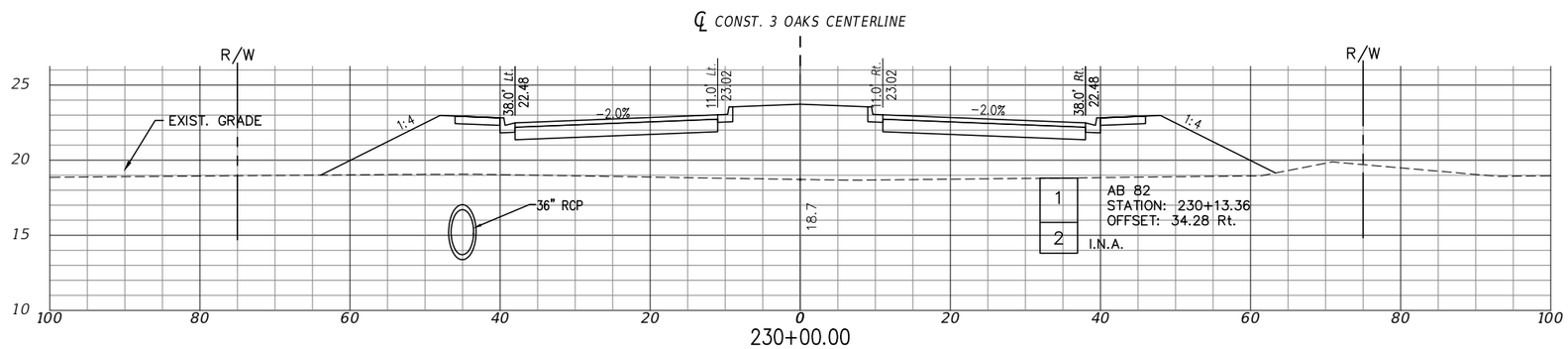

EXC		EMB	
A	V	A	V
0	378	507	118919
0	378	512	117032
0	378	388	115365

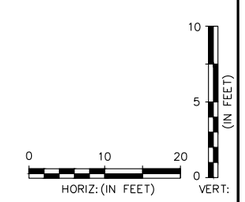

DATE	BY	REVISION DESCRIPTION

AVALON PROJECT: 17-372
PROJ. MGR. Jack Schrager, PE, VP
LEE COUNTY DOT PROJECT: CN160642/ANB
LDOT PROJ. MGR. VINCENT MILLER

AVALON ENGINEERING, INC.
2503 DEL PRADO BLVD. SUITE 200
CAPE CORAL, FLORIDA 33904
FBPE#3128 (239) 573-2077

LEE COUNTY DEPARTMENT OF TRANSPORTATION
(239) 533-8580

THREE OAKS PARKWAY EXTENSION
PHASE 1: FIDDLESTICKS CANAL TO STA 265+20
LEE COUNTY, FLORIDA

ROADWAY CROSS SECTION
THREE OAKS PKWY EXT.

P:\CAD\2017\17-372\3-Oaks-Ph1\PLOT_PHASE1\THREE OAKS XSECT_D.dwg, 89 ROADWAY CROSS SECTION, 4/29/2019 4:04:07 PM, Avalon Engineering Inc.

NOTE:
1.) ALL EXISTING AND PROPOSED GRADES SHOWN REFER TO N.A.V.D. 1988. TO CONVERT TO N.G.V.D. 1929 ADD 1.18 FT.

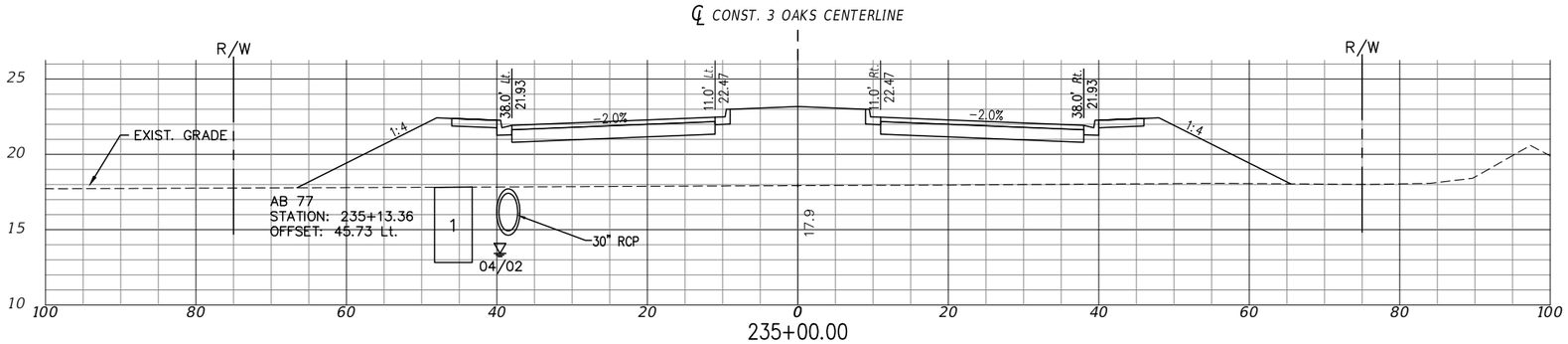

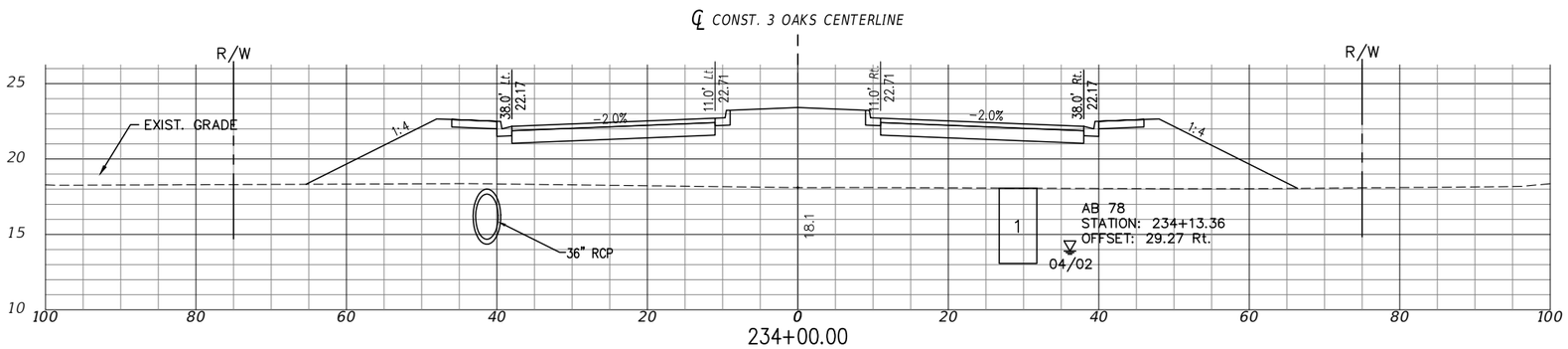

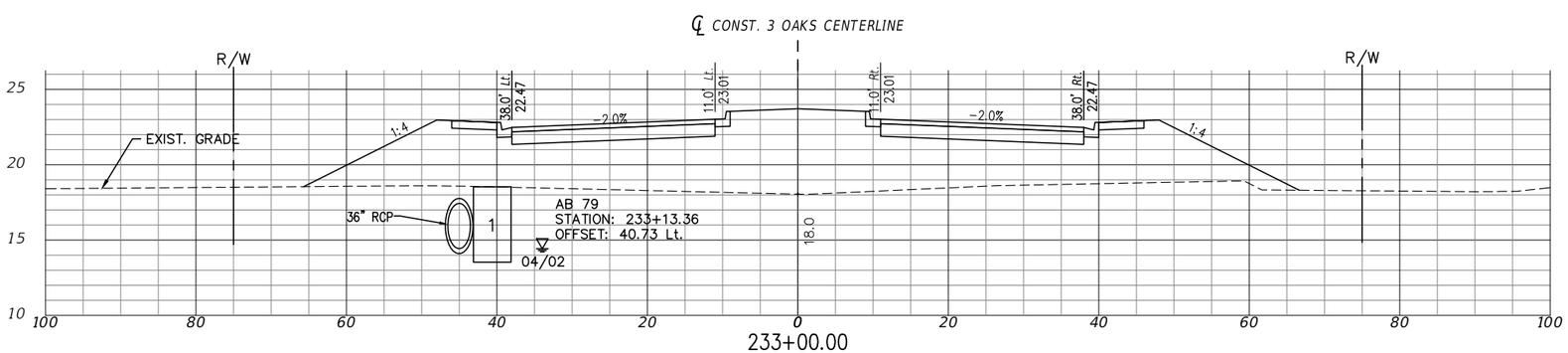

EXC		EMB	
A	V	A	V
0	378	440	123929
0	378	440	122300
0	378	439	120672

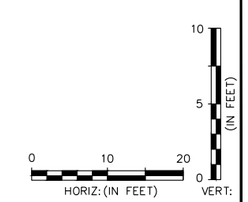

P:\CAD\2017\17-372\3-Oaks-Ph1\PLOT_PHASE1\THREE OAKS XSECT_D.dwg, 90 ROADWAY CROSS SECTIONS, 4/29/2019 4:04:22 PM, Avalon Engineering Inc.

DATE	BY	REVISION DESCRIPTION

AVALON PROJECT: 17-372
PROJ. MGR. Jack Schrager, PE, VP
LEE COUNTY DOT PROJECT: CN160642/ANB
LDOT PROJ. MGR. VINCENT MILLER

AVALON ENGINEERING, INC.
2503 DEL PRADO BLVD, SUITE 200
CAPE CORAL, FLORIDA 33904
FBPE#3128 (239) 573-2077

LEE COUNTY DEPARTMENT OF TRANSPORTATION
(239) 533-8580

THREE OAKS PARKWAY EXTENSION
PHASE 1: FIDDLESTICKS CANAL TO STA 265+20
LEE COUNTY, FLORIDA

ROADWAY CROSS SECTIONS
THREE OAKS PKWY EXT.

NOTE:
1.) ALL EXISTING AND PROPOSED GRADES SHOWN REFER TO N.A.V.D. 1988. TO CONVERT TO N.G.V.D. 1929 ADD 1.18 FT.

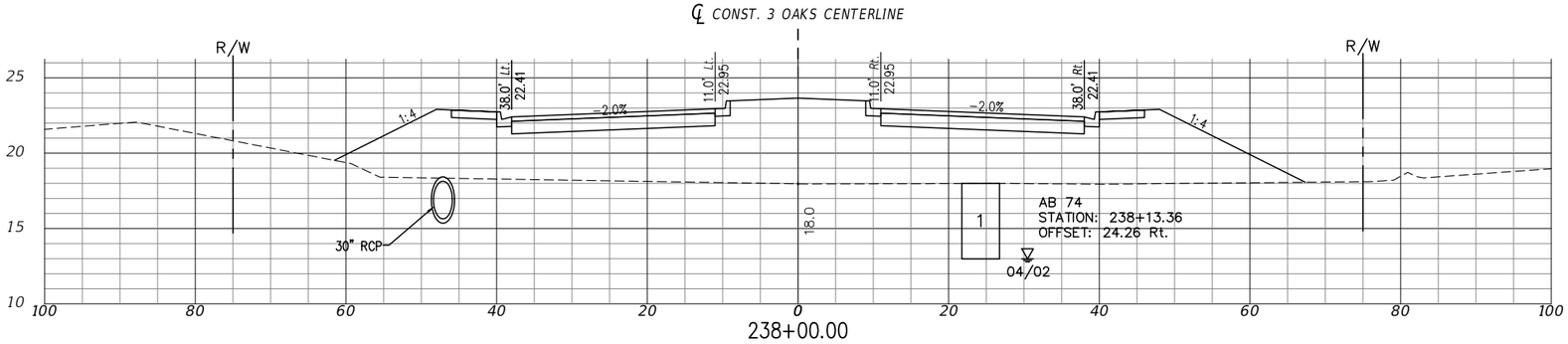

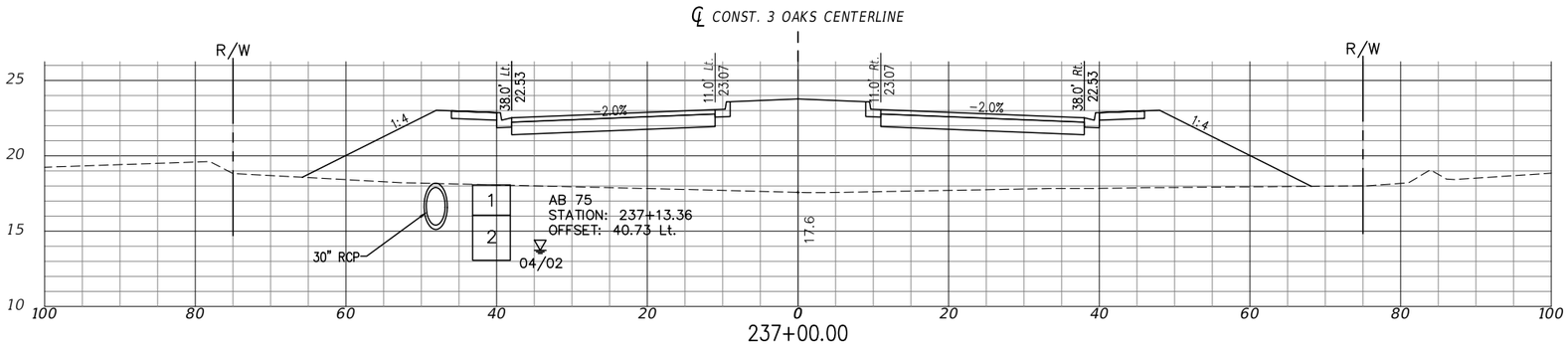

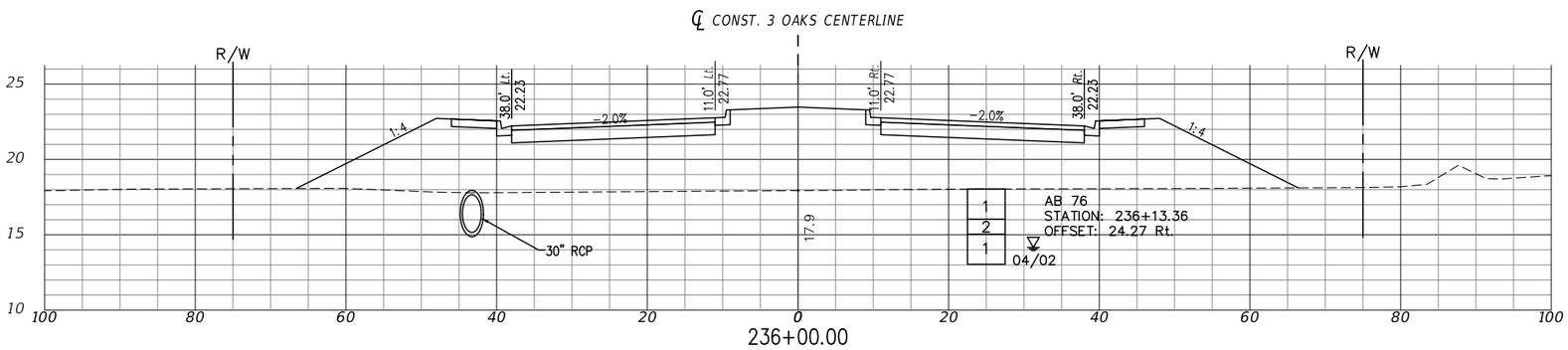

EXC		EMB	
A	V	A	V
0	378	474	129317
0	378	524	127469
0	378	474	125621

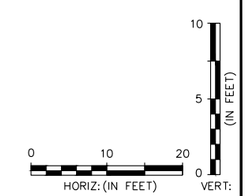

DATE	BY	REVISION DESCRIPTION

AVALON PROJECT: 17-372
PROJ. MGR. Jack Schrager, PE, VP
LEE COUNTY DOT PROJECT: CN160642/ANB
LDOT PROJ. MGR. VINCENT MILLER

AVALON ENGINEERING, INC.
2503 DEL PRADO BLVD, SUITE 200
CAPE CORAL, FLORIDA 33904
FBPE#3128 (239) 573-2077

LEE COUNTY DEPARTMENT OF TRANSPORTATION
(239) 533-8580

THREE OAKS PARKWAY EXTENSION
PHASE 1: FIDDLESTICKS CANAL TO STA 265+20
LEE COUNTY, FLORIDA

ROADWAY CROSS SECTIONS
THREE OAKS PKWY EXT.

SHEET 91 OF 110

P:\CAD\2017\17-372\3-Oaks-Ph1\PLOT_PHASE1\THREE OAKS XSECT_D.dwg, 91 ROADWAY CROSS SECTIONS, 4/29/2019 4:04:37 PM, Avalon Engineering Inc.

NOTE:
1.) ALL EXISTING AND PROPOSED GRADES SHOWN REFER TO N.A.V.D. 1988. TO CONVERT TO N.G.V.D. 1929 ADD 1.18 FT.

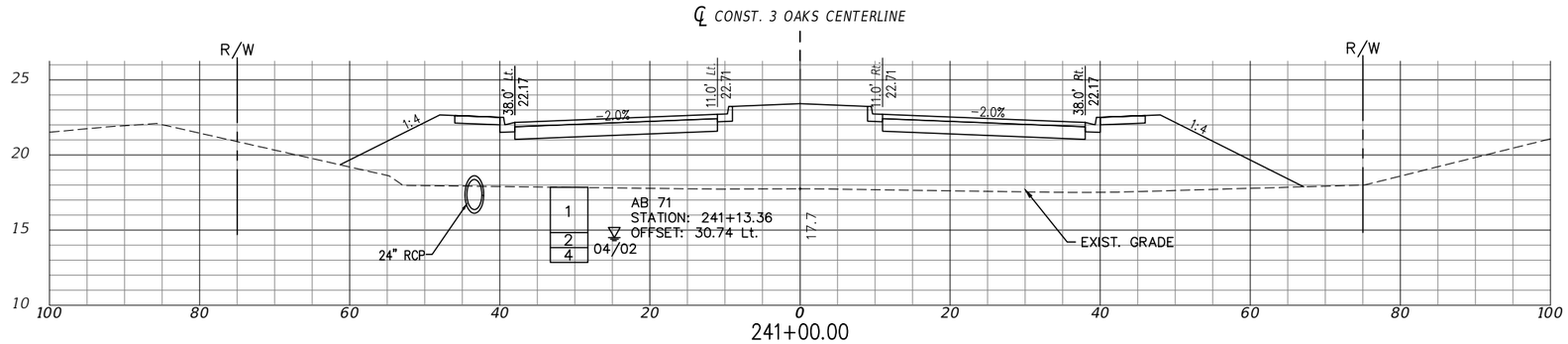

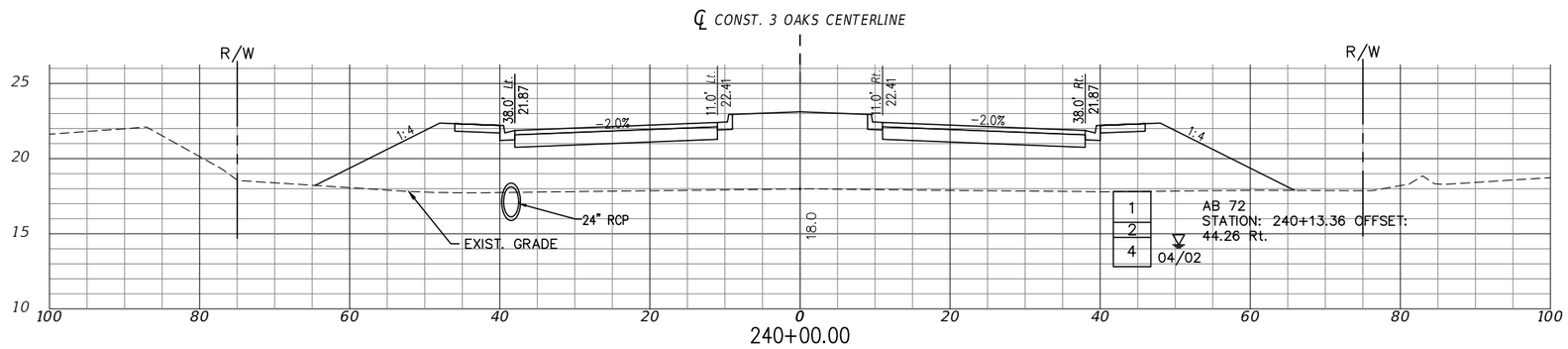

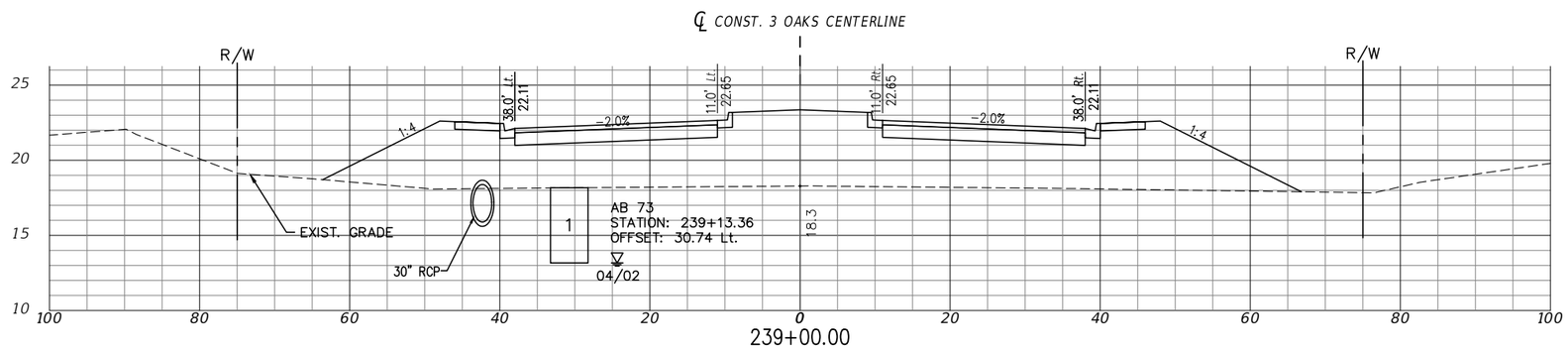

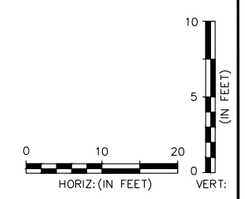

EXC		EMB	
A	V	A	V
0	378	484	134313
0	378	439	132603
0	378	431	130992

P:\CAD\2017\17-372\3-Oaks-Ph1\PLOT_PHASE1\THREE OAKS XSECT_D.dwg, 92 ROADWAY CROSS SECTION, 4/29/2019 4:04:52 PM, Avalon Engineering Inc.

DATE	BY	REVISION DESCRIPTION

AVALON PROJECT: 17-372
PROJ. MGR. Jack Schrager, PE, VP
LEE COUNTY DOT PROJECT: CN160642/ANB
LDOT PROJ. MGR. VINCENT MILLER

AVALON ENGINEERING, INC.
2503 DEL PRADO BLVD, SUITE 200
CAPE CORAL, FLORIDA 33904
FBPE#3128 (239) 573-2077

LEE COUNTY DEPARTMENT OF TRANSPORTATION
(239) 533-8580

THREE OAKS PARKWAY EXTENSION
PHASE 1: FIDDLESTICKS CANAL TO STA 265+20
LEE COUNTY, FLORIDA

ROADWAY CROSS SECTION
THREE OAKS PKWY EXT.

NOTE:
1.) ALL EXISTING AND PROPOSED GRADES SHOWN REFER TO N.A.V.D. 1988. TO CONVERT TO N.G.V.D. 1929 ADD 1.18 FT.

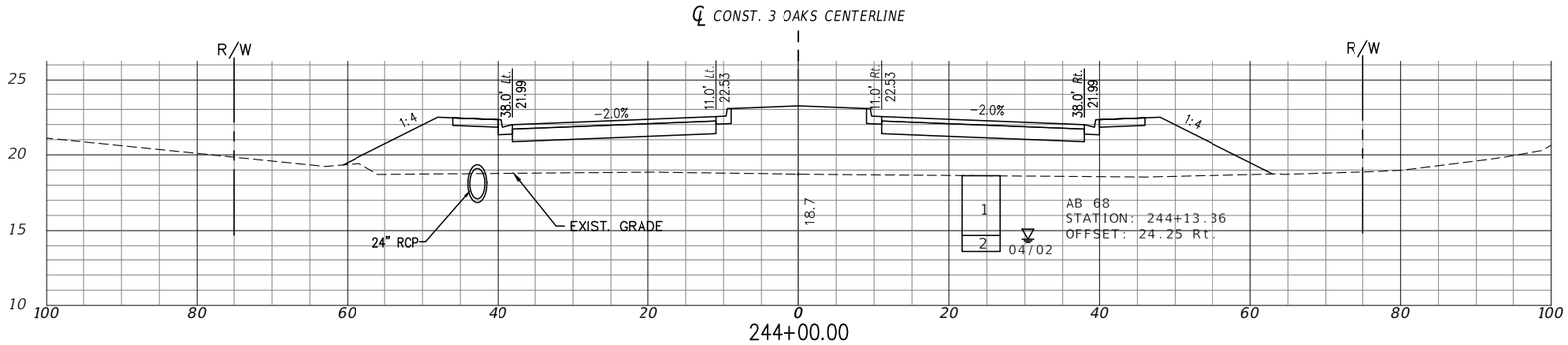

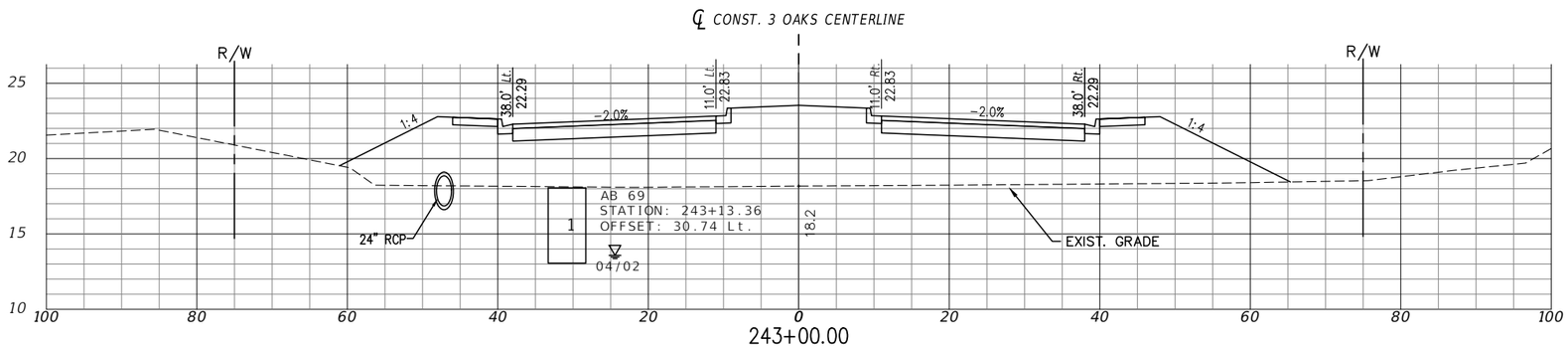

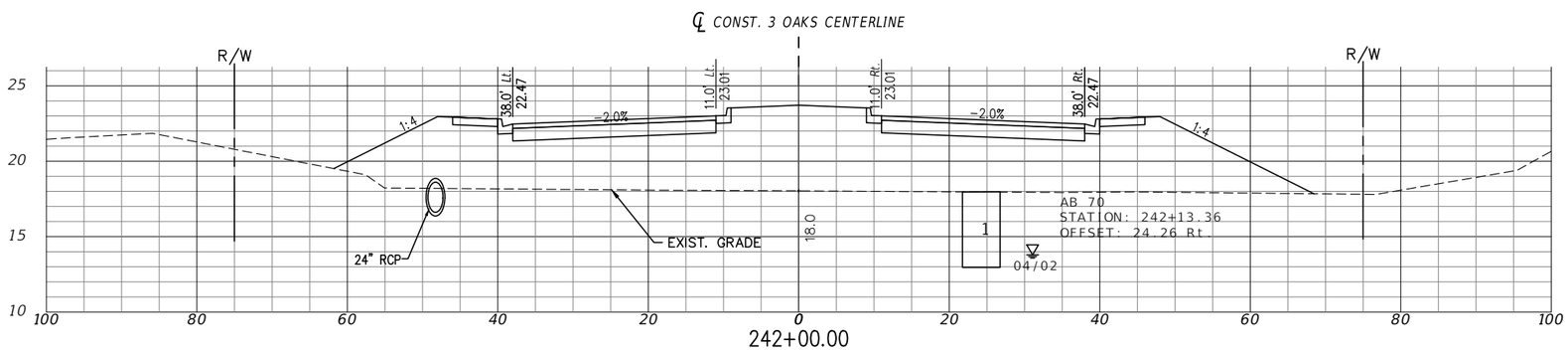

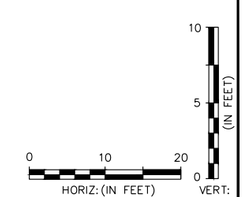

EXC		EMB	
A	V	A	V
0	378	344	139286
0	378	441	137833
0	378	488	136113

P:\CAD\2017\17-372\3-Oaks-Ph1\PLOT_PHASE1\THREE OAKS XSECT_E.dwg, 93 ROADWAY CROSS SECTIONS, 4/29/2019 4:05:45 PM, Avalon Engineering Inc.

DATE	BY	REVISION DESCRIPTION

AVALON PROJECT: 17-372
PROJ. MGR. Jack Schrager, PE, VP
LEE COUNTY DOT PROJECT: CN160642/ANB
LDOT PROJ. MGR. VINCENT MILLER

AVALON ENGINEERING, INC.
2503 DEL PRADO BLVD, SUITE 200
CAPE CORAL, FLORIDA 33904
FBPE#3128 (239) 573-2077

LEE COUNTY DEPARTMENT OF TRANSPORTATION
(239) 533-8580

THREE OAKS PARKWAY EXTENSION
PHASE 1: FIDDLESTICKS CANAL TO STA 265+20
LEE COUNTY, FLORIDA

ROADWAY CROSS SECTIONS
THREE OAKS PKWY EXT.

SHEET 93 of 110

NOTE:
1.) ALL EXISTING AND PROPOSED GRADES SHOWN REFER TO N.A.V.D. 1988. TO CONVERT TO N.G.V.D. 1929 ADD 1.18 FT.

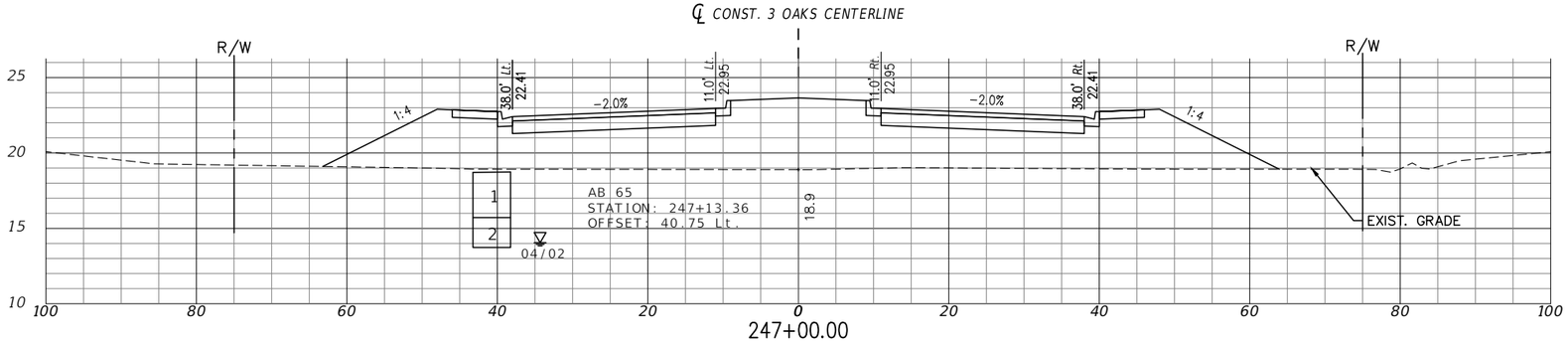

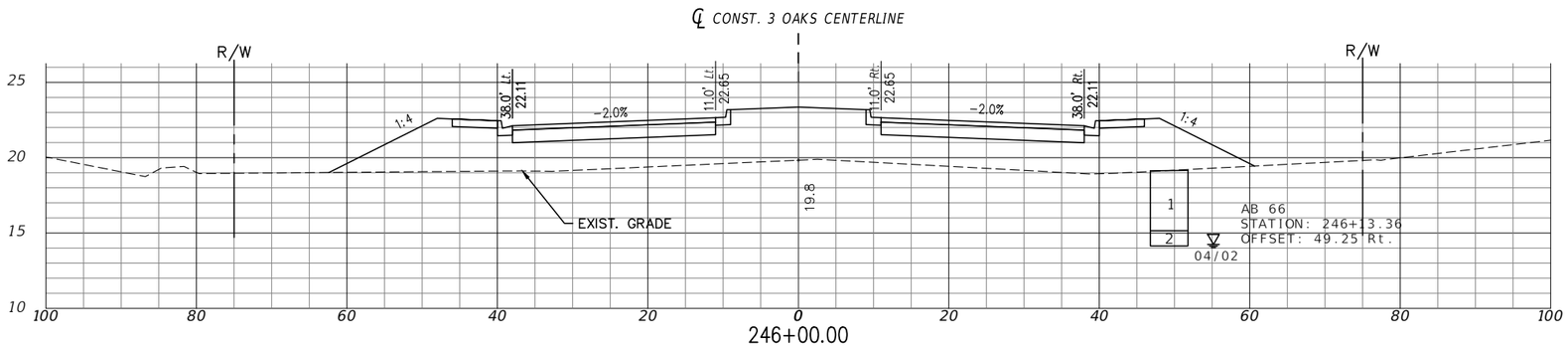

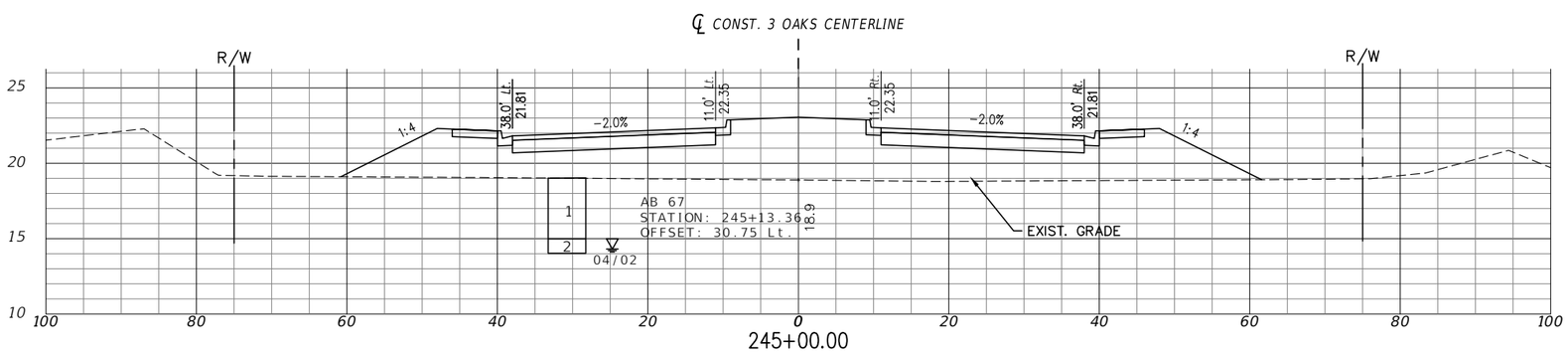

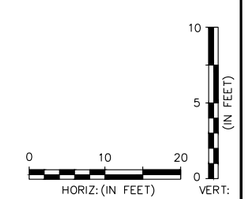

EXC		EMB	
A	V	A	V
0	378	370	142775
0	378	288	141558
0	378	298	140474

P:\CAD\2017\17-372\3-Oaks-Ph1\PLOT_PHASE1\THREE OAKS XSECT_E.dwg, 94 ROADWAY CROSS SECTIONS, 4/29/2019 4:06:04 PM, Avalon Engineering Inc.

DATE	BY	REVISION DESCRIPTION

AVALON PROJECT: 17-372
PROJ. MGR. Jack Schrager, PE, VP
LEE COUNTY DOT PROJECT: CN160642/ANB
LDOT PROJ. MGR. VINCENT MILLER

AVALON ENGINEERING, INC.
2503 DEL PRADO BLVD. SUITE 200
CAPE CORAL, FLORIDA 33904
FBPE#3128 (239) 573-2077

LEE COUNTY DEPARTMENT OF TRANSPORTATION
(239) 533-8580

THREE OAKS PARKWAY EXTENSION
PHASE 1: FIDDLESTICKS CANAL TO STA 265+20
LEE COUNTY, FLORIDA

ROADWAY CROSS SECTIONS
THREE OAKS PKWY EXT.

NOTE:
1.) ALL EXISTING AND PROPOSED GRADES SHOWN REFER TO N.A.V.D. 1988. TO CONVERT TO N.G.V.D. 1929 ADD 1.18 FT.

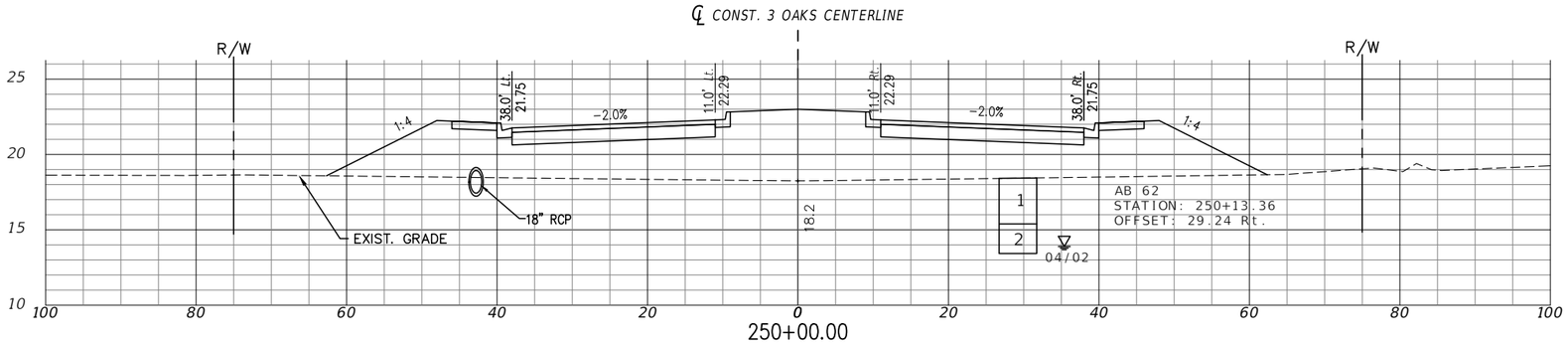

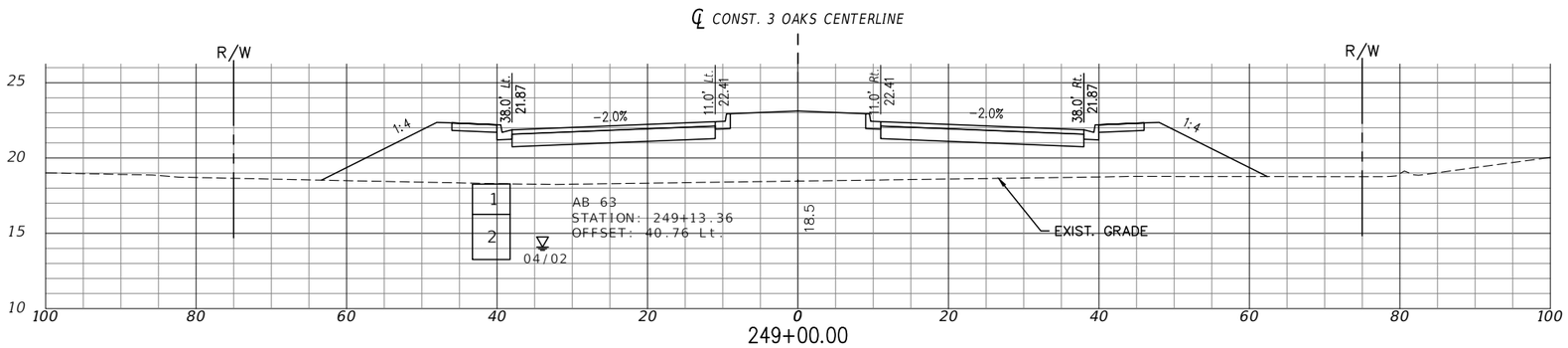

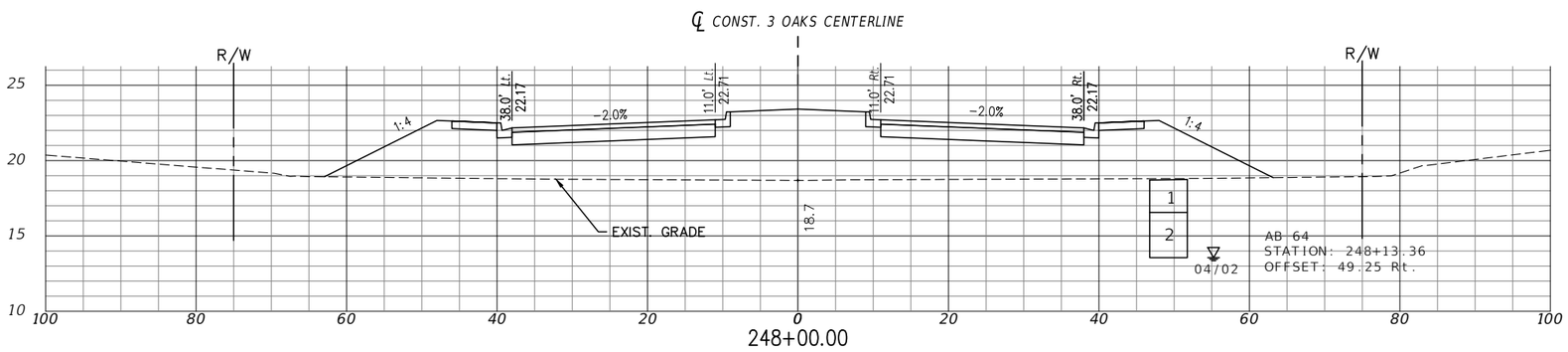

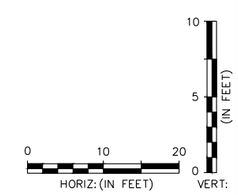

EXC		EMB	
A	V	A	V
0	378	353	146768
0	378	356	145455
0	378	361	144127

P:\CAD\2017\17-372\3-Oaks-Ph1\PLOT_PHASE1\THREE OAKS XSECT_E.dwg, 95 ROADWAY CROSS SECTIONS, 4/29/2019 4:06:24 PM, Avalon Engineering Inc.

DATE	BY	REVISION DESCRIPTION

AVALON PROJECT: 17-372
PROJ. MGR. Jack Schrager, PE, VP
LEE COUNTY DOT PROJECT: CN160642/ANB
LDOT PROJ. MGR. VINCENT MILLER

AVALON ENGINEERING, INC.
2503 DEL PRADO BLVD, SUITE 200
CAPE CORAL, FLORIDA 33904
FBPE#3128 (239) 573-2077

LEE COUNTY DEPARTMENT OF TRANSPORTATION
(239) 533-8580

THREE OAKS PARKWAY EXTENSION
PHASE 1: FIDDLESTICKS CANAL TO STA 265+20
LEE COUNTY, FLORIDA

ROADWAY CROSS SECTIONS
THREE OAKS PKWY EXT.

NOTE:
1.) ALL EXISTING AND PROPOSED GRADES SHOWN REFER TO N.A.V.D. 1988. TO CONVERT TO N.G.V.D. 1929 ADD 1.18 FT.

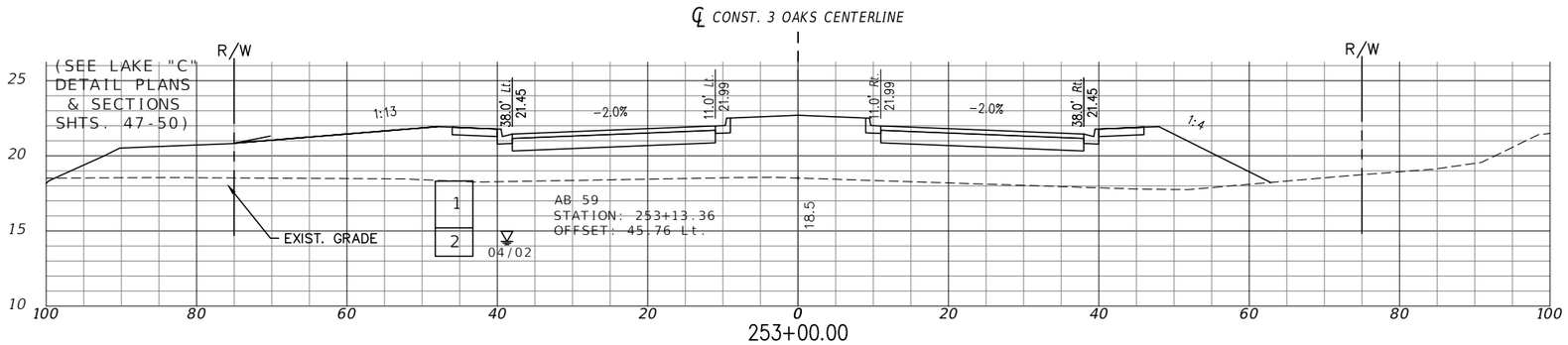

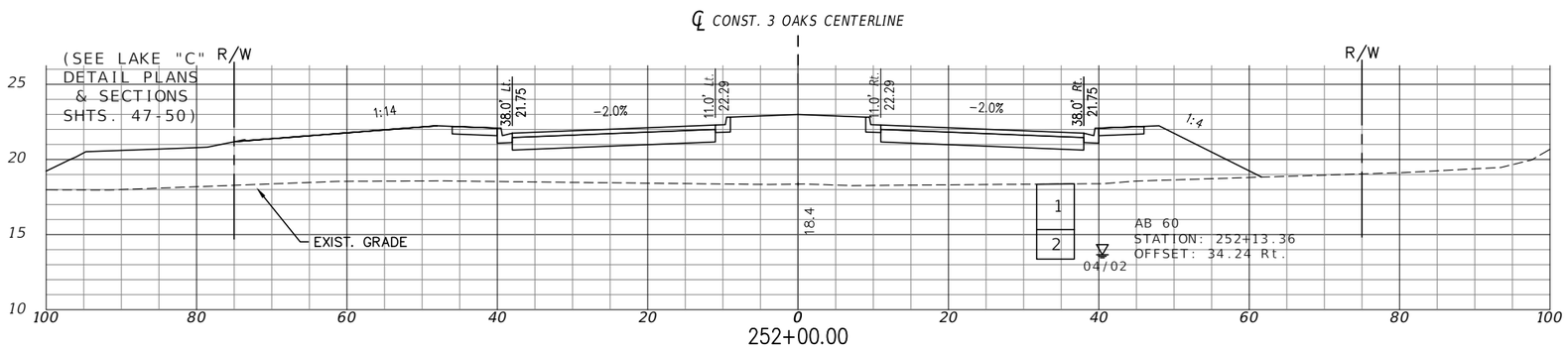

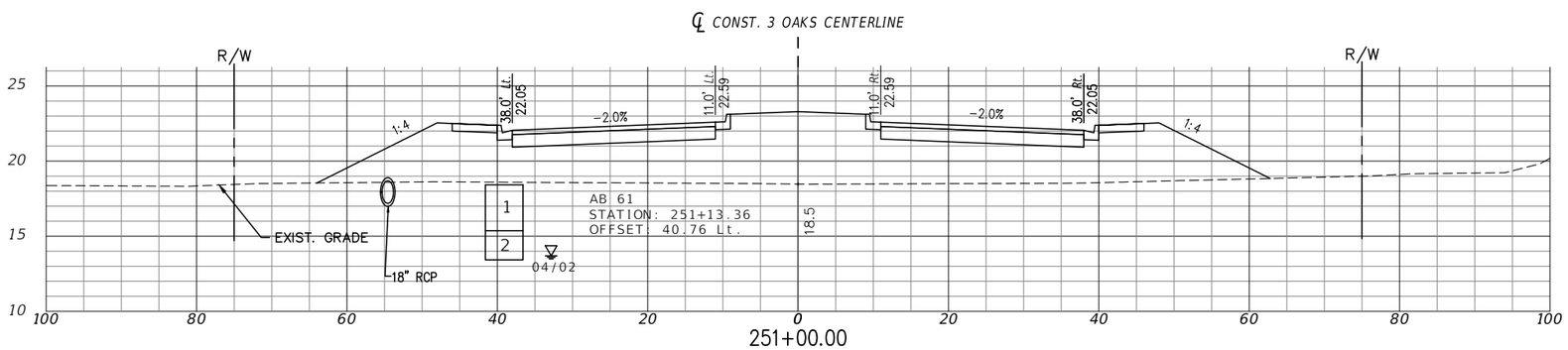

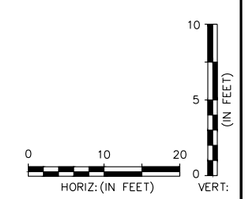

EXC		EMB	
A	V	A	V
0	378	390	151035
0	378	408	149556
0	378	372	148111

P:\CAD\2017\17-372\3-Oaks-Ph1\PLOT_PHASE1\THREE OAKS XSECT_E.dwg, 96 ROADWAY CROSS SECTIONS, 4/29/2019 4:06:44 PM, Avalon Engineering Inc.

DATE	BY	REVISION DESCRIPTION

AVALON PROJECT: 17-372
PROJ. MGR. Jack Schrager, PE, VP
LEE COUNTY DOT PROJECT: CN160642/ANB
LDOT PROJ. MGR. VINCENT MILLER

AVALON ENGINEERING, INC.
2503 DEL PRADO BLVD, SUITE 200
CAPE CORAL, FLORIDA 33904
FBPE#3128 (239) 573-2077

LEE COUNTY DEPARTMENT OF TRANSPORTATION
(239) 533-8580

THREE OAKS PARKWAY EXTENSION
PHASE 1: FIDDLESTICKS CANAL TO STA 265+20
LEE COUNTY, FLORIDA

ROADWAY CROSS SECTIONS
THREE OAKS PKWY EXT.

SHEET
96 OF 110

NOTE:
1.) ALL EXISTING AND PROPOSED GRADES SHOWN REFER TO N.A.V.D. 1988. TO CONVERT TO N.G.V.D. 1929 ADD 1.18 FT.

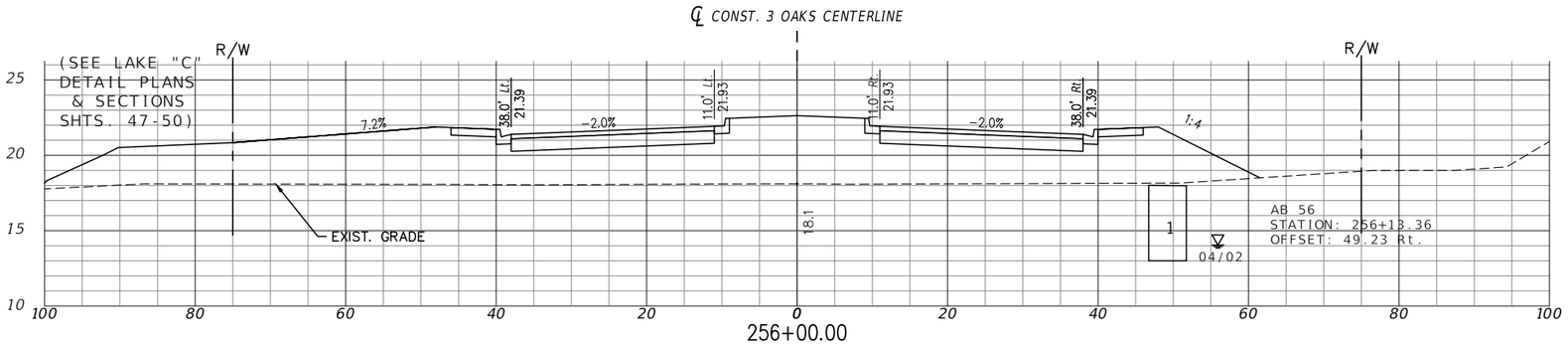

EXC		EMB	
A	V	A	V
0	378	405	155049

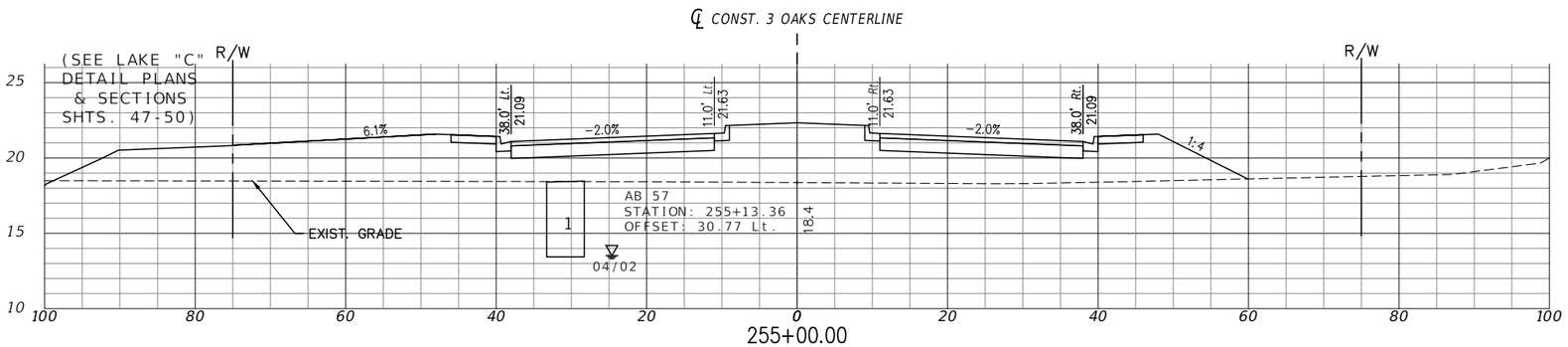

EXC		EMB	
A	V	A	V
0	378	327	153693

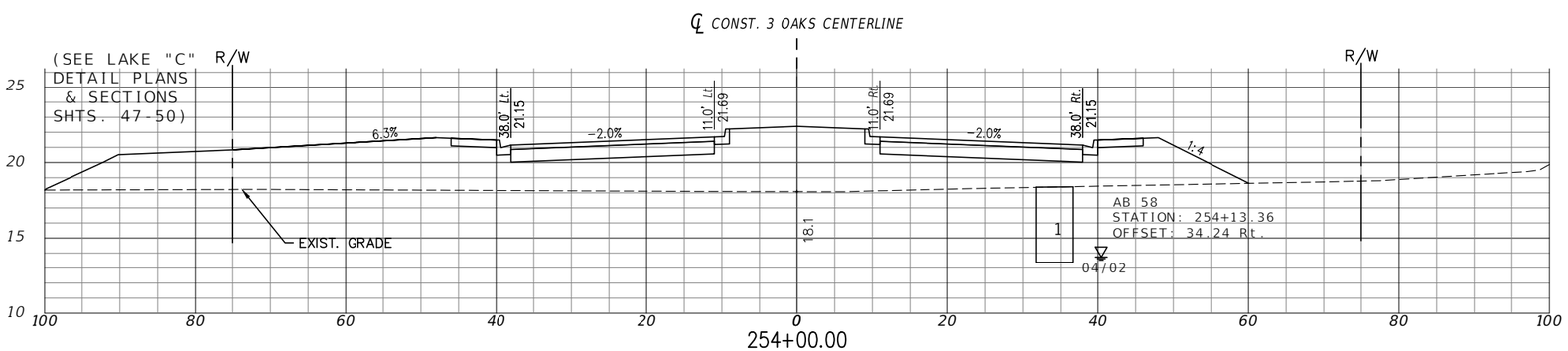

EXC		EMB	
A	V	A	V
0	378	359	152422

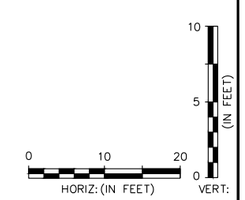

P:\CAD\2017\17-372\3-Oaks-Ph1\PLOT_PHASE1\THREE OAKS XSECT_E.dwg, 97 ROADWAY CROSS SECTIONS, 4/29/2019 4:07:04 PM, Avalon Engineering Inc.

DATE	BY	REVISION DESCRIPTION

AVALON PROJECT: 17-372
PROJ. MGR. Jack Schrager, PE, VP
LEE COUNTY DOT PROJECT: CN160642/ANB
LDOT PROJ. MGR. VINCENT MILLER

AVALON ENGINEERING, INC.
2503 DEL PRADO BLVD, SUITE 200
CAPE CORAL, FLORIDA 33904
FBPE#3128 (239) 573-2077

LEE COUNTY DEPARTMENT OF TRANSPORTATION
(239) 533-8580

THREE OAKS PARKWAY EXTENSION
PHASE 1: FIDDLESTICKS CANAL TO STA 265+20
LEE COUNTY, FLORIDA

ROADWAY CROSS SECTIONS
THREE OAKS PKWY EXT.

NOTE:
1.) ALL EXISTING AND PROPOSED GRADES SHOWN REFER TO N.A.V.D. 1988. TO CONVERT TO N.G.V.D. 1929 ADD 1.18 FT.

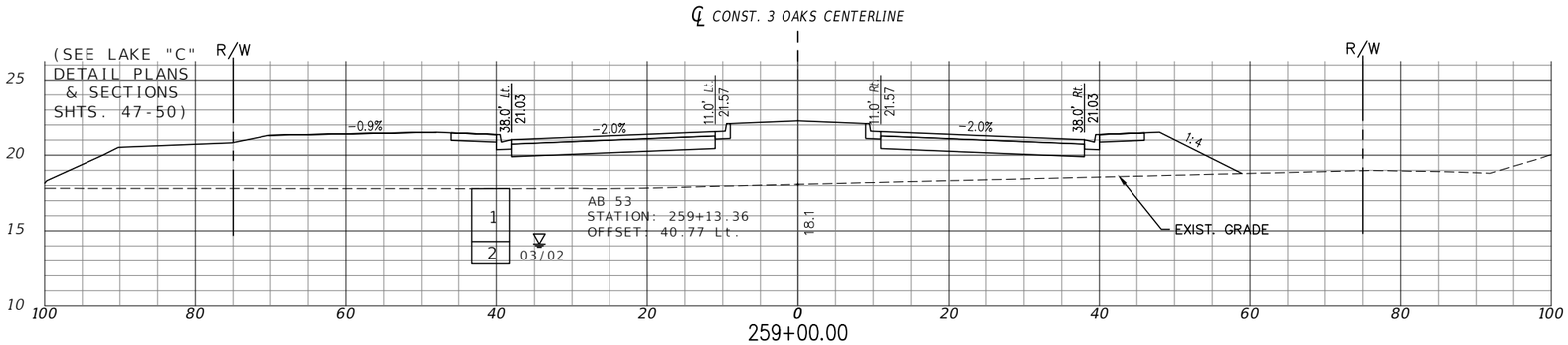

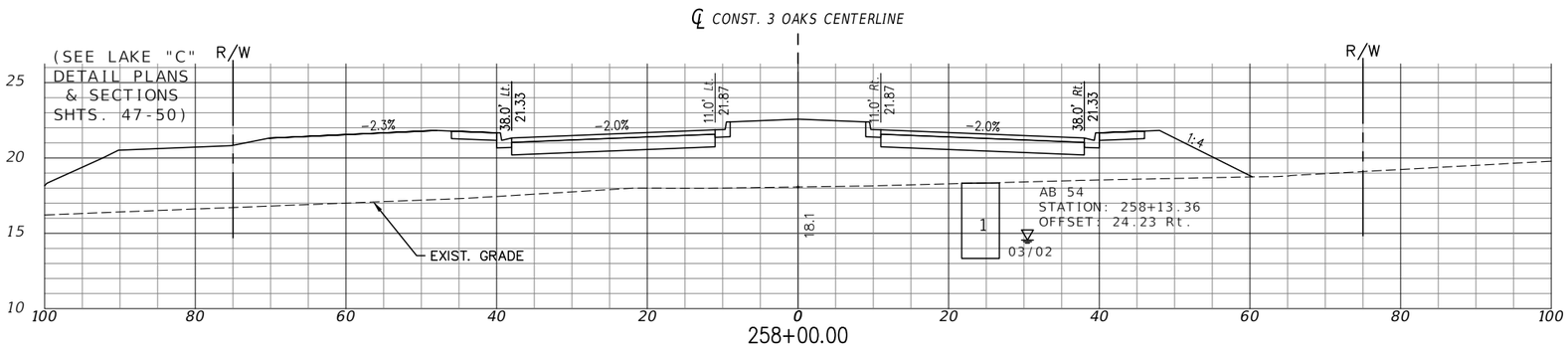

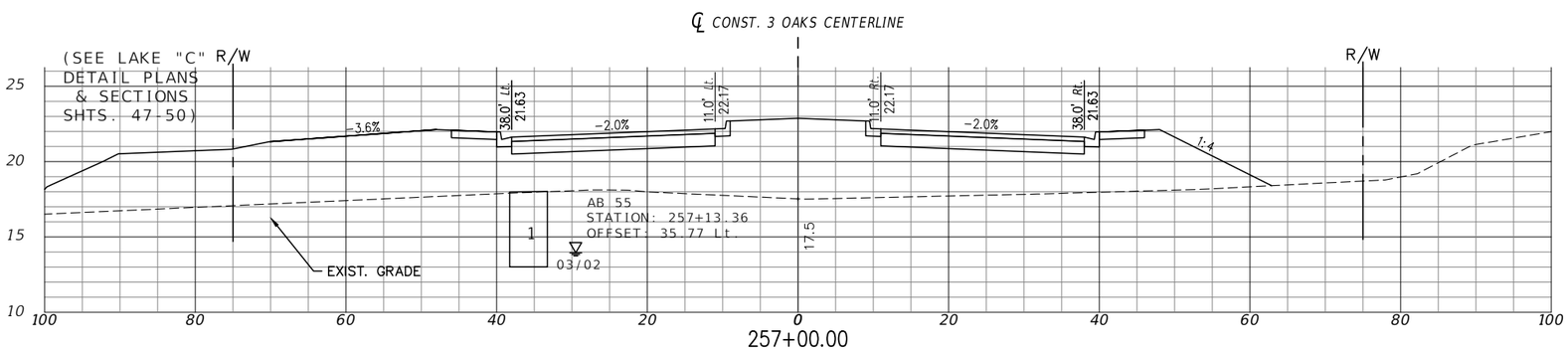

EXC		EMB	
A	V	A	V
0	378	350	159690
0	378	409	158283
0	378	466	156663

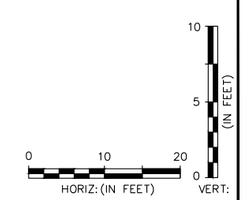

P:\CAD\2017\17-372\3-Oaks-Ph1\PLOT_PHASE1\THREE OAKS XSECT_E.dwg, 98 ROADWAY CROSS SECTIONS, 4/29/2019 4:07:24 PM, Avalon Engineering Inc.

DATE	BY	REVISION DESCRIPTION

AVALON PROJECT: 17-372
PROJ. MGR. Jack Schrager, PE, VP
LEE COUNTY DOT PROJECT: CN160642/ANB
LDOT PROJ. MGR. VINCENT MILLER

AVALON ENGINEERING, INC.
2503 DEL PRADO BLVD, SUITE 200
CAPE CORAL, FLORIDA 33904
FBPE#3128 (239) 573-2077

LEE COUNTY DEPARTMENT OF TRANSPORTATION
(239) 533-8580

THREE OAKS PARKWAY EXTENSION
PHASE 1: FIDDLESTICKS CANAL TO STA 265+20
LEE COUNTY, FLORIDA

ROADWAY CROSS SECTIONS
THREE OAKS PKWY EXT.

NOTE:
1.) ALL EXISTING AND PROPOSED GRADES SHOWN REFER TO N.A.V.D. 1988. TO CONVERT TO N.G.V.D. 1929 ADD 1.18 FT.

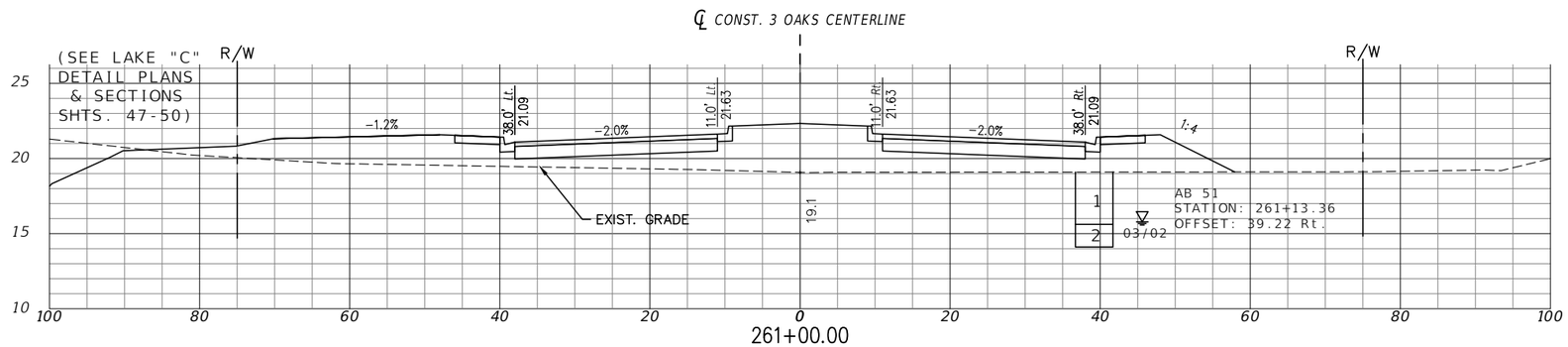

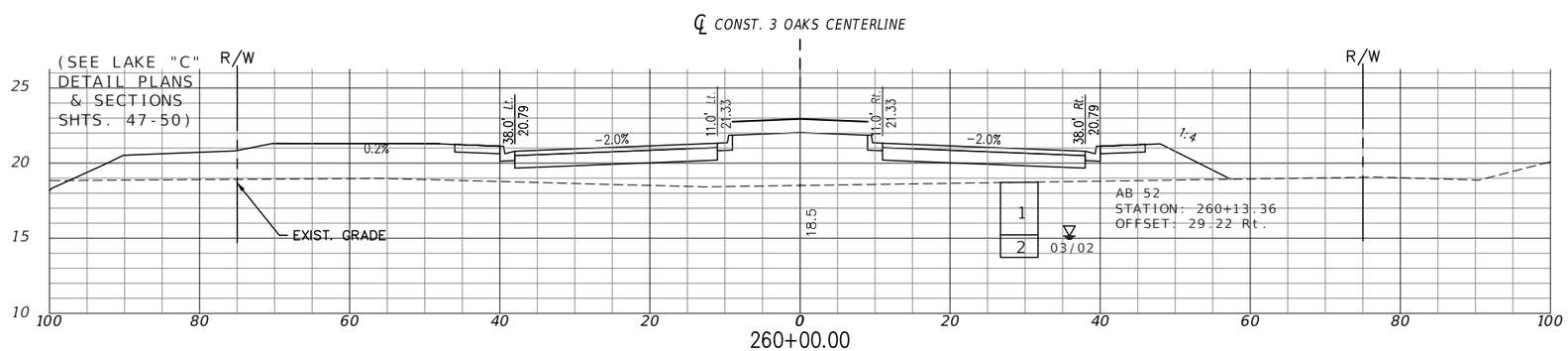

EXC		EMB	
A	V	A	V
0	378	207	161627
0	378	244	160791

HORIZ: (IN FEET) 0 10 20
VERT: (IN FEET) 0 5 10

P:\CAD\2017\17-372\3-Oaks-Ph1\PLOT_PHASE1\THREE OAKS XSECT_E.dwg, 99 ROADWAY CROSS SECTIONS, 4/29/2019 4:07:43 PM, Avalon Engineering Inc.

DATE	BY	REVISION DESCRIPTION

AVALON PROJECT: 17-372
PROJ. MGR. Jack Schrager, PE, VP
LEE COUNTY DOT PROJECT: CN160642/ANB
LDOT PROJ. MGR. VINCENT MILLER

AVALON ENGINEERING, INC.
2503 DEL PRADO BLVD, SUITE 200
CAPE CORAL, FLORIDA 33904
FBPE#3128 (239) 573-2077

LEE COUNTY DEPARTMENT OF TRANSPORTATION
(239) 533-8580

THREE OAKS PARKWAY EXTENSION
PHASE 1: FIDDLESTICKS CANAL TO STA 265+20
LEE COUNTY, FLORIDA

ROADWAY CROSS SECTIONS
THREE OAKS PKWY EXT.

NOTE:
1.) ALL EXISTING AND PROPOSED GRADES SHOWN REFER TO N.A.V.D. 1988. TO CONVERT TO N.G.V.D. 1929 ADD 1.18 FT.

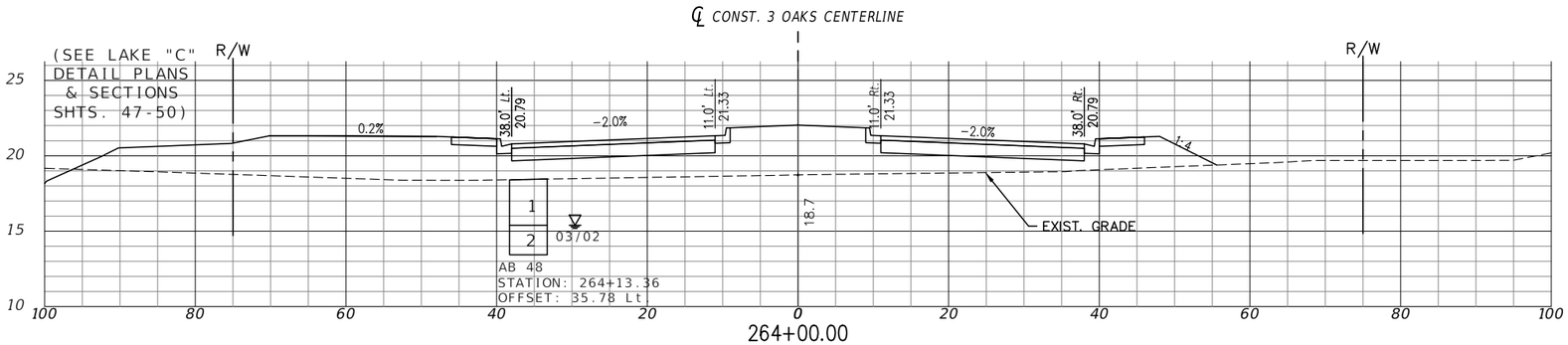

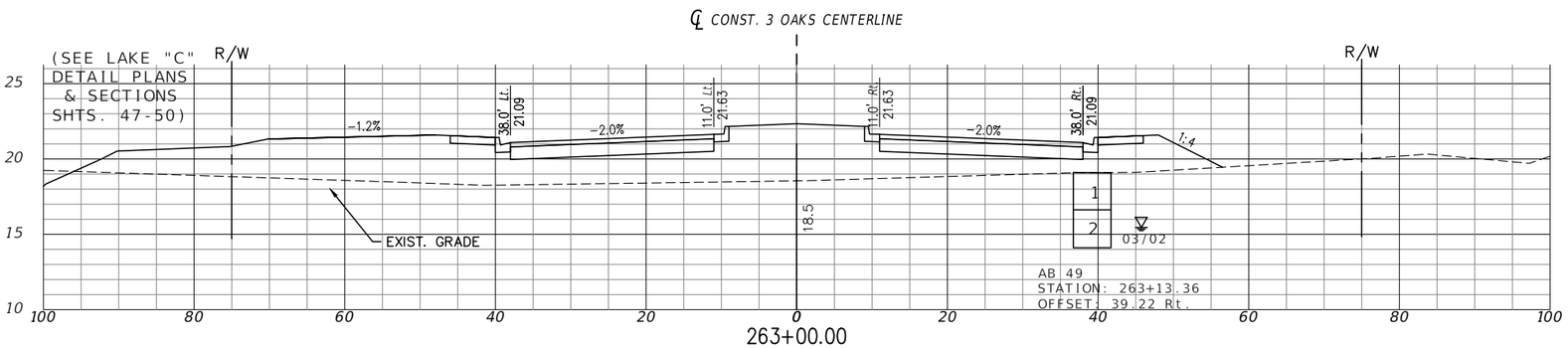

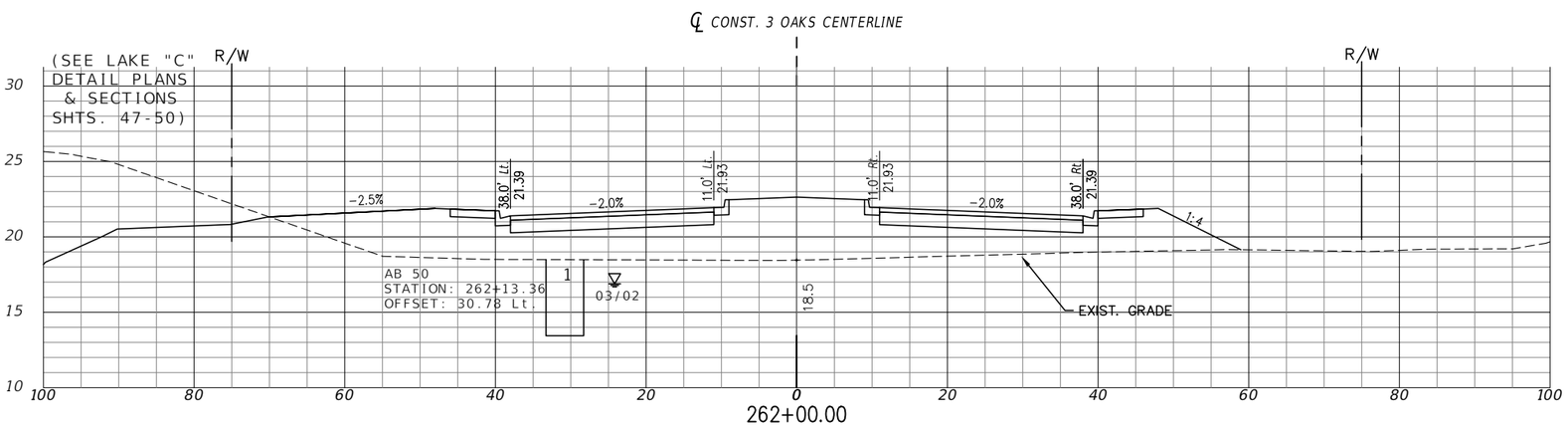

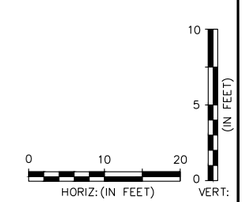

EXC		EMB	
A	V	A	V
0	378	244	164629
0	378	285	163650
0	378	300	162566

P:\CAD\2017\17-372\3-Oaks-Ph1\PLOT_PHASE1\THREE OAKS XSECT_E.dwg, 100 ROADWAY CROSS SECTIONS, 4/29/2019 4:08:09 PM, Avalon Engineering Inc.

DATE	BY	REVISION DESCRIPTION

AVALON PROJECT: 17-372
PROJ. MGR. Jack Schrager, PE, VP
LEE COUNTY DOT PROJECT: CN160642/ANB
LDOT PROJ. MGR. VINCENT MILLER

AVALON ENGINEERING, INC.
2503 DEL PRADO BLVD, SUITE 200
CAPE CORAL, FLORIDA 33904
FBPE#3128 (239) 573-2077

LEE COUNTY DEPARTMENT OF TRANSPORTATION
(239) 533-8580

THREE OAKS PARKWAY EXTENSION
PHASE 1: FIDDLESTICKS CANAL TO STA 265+20
LEE COUNTY, FLORIDA

ROADWAY CROSS SECTIONS
THREE OAKS PKWY

SHEET
100 OF 110

NOTE:
1.) ALL EXISTING AND PROPOSED GRADES SHOWN REFER TO N.A.V.D. 1988. TO CONVERT TO N.G.V.D. 1929 ADD 1.18 FT.

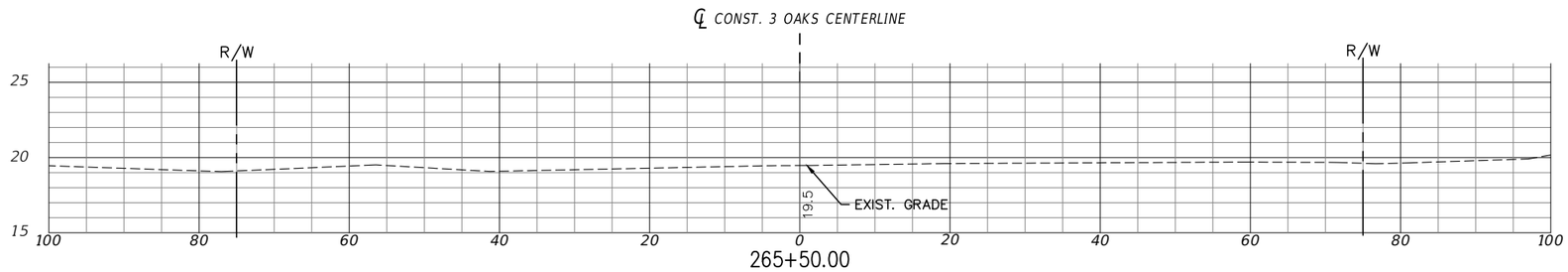

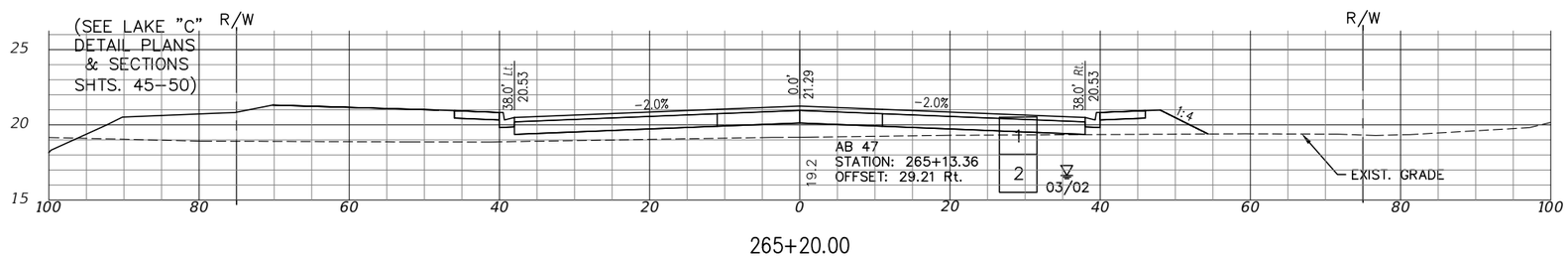

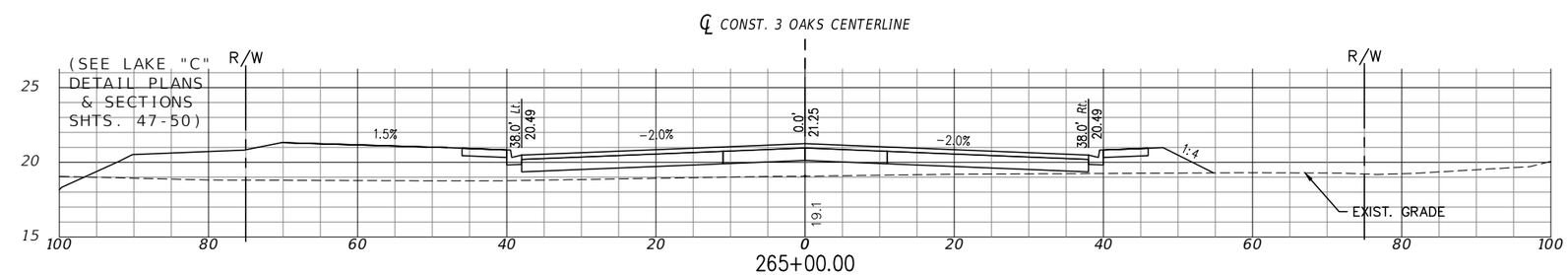

EXC		EMB	
A	V	A	V
0	378	0	165584
0	378	159	165496
0	378	161	165378

HORIZ: (IN FEET) 0 10 20
VERT: (IN FEET) 0 5 10

P:\CAD\2017\17-372\3-Oaks-Ph1\PLOT_PHASE1\THREE OAKS XSECT_E.dwg, 101 ROADWAY CROSS SECTIONS, 4/29/2019 4:08:35 PM, Avalon Engineering Inc.

DATE	BY	REVISION DESCRIPTION

AVALON PROJECT: 17-372
PROJ. MGR. Jack Schrager, PE, VP
LEE COUNTY DOT PROJECT: CN160642/ANB
LDOT PROJ. MGR. VINCENT MILLER

AVALON ENGINEERING, INC.
2503 DEL PRADO BLVD, SUITE 200
CAPE CORAL, FLORIDA 33904
FBPE#3128 (239) 573-2077

LEE COUNTY DEPARTMENT OF TRANSPORTATION
(239) 533-8580

THREE OAKS PARKWAY EXTENSION
PHASE 1: FIDDLESTICKS CANAL TO STA 265+20
LEE COUNTY, FLORIDA

ROADWAY CROSS SECTIONS
THREE OAKS PKWY EXT.

STORMWATER POLLUTION PREVENTION PLAN

THREE OAKS PARKWAY EXTENSION

STORMWATER POLLUTION PREVENTION PLAN

The following narrative of the Stormwater Pollution Prevention Plan contains references to the Standard Specifications for Road and Bridge Construction, the Design Standards, and other sheets of these construction plans. The first sheet of the construction plans (called the Key Sheet) contains an Index to the other sheets. The complete Stormwater Pollution Prevention Plan includes several items: this narrative description, the documents referenced in this narrative, the Contractor's approved Erosion Control Plan required by Specification Section 104, and reports of Inspections made during construction.

1.0 SITE DESCRIPTION

1.1 Nature of Construction Activity: The project is the extension of Three Oaks Parkway, a four-lane roadway with an urban type section. This project involves constructing a roadway surface, curb and gutter, sidewalk, underground storm sewer systems, and stormwater management facilities. This project begins approximately 4200 lf north of Alico Road and roadway construction extends to Station 265+20.00. The majority of the roadway section parallels I-75 on the west side of I-75.

1.2 Sequence of Major Soil Distributing Activities:

In the Section 104 Erosion Control Plan, the contractor shall provide a detailed sequence of construction for all construction activities. The Contractor shall follow the sequence of major activities described below, unless the Contractor proposes a different sequence that is equal or better at controlling erosion and trapping sediment and is approved by the Engineer.

For the construction phase, install perimeter controls after clearing and grubbing necessary for installation of controls but before beginning other work for the construction phase. Remove perimeter controls only after all upstream areas are stabilized.

1.2.1 Clearing and grubbing, earthwork, and storm sewer construction for the stormwater detention areas and control structures and outfall connections to the existing storm sewer system.

1.2.2 Storm sewer and roadway underdrain construction. Construct the storm drain pipe in the upstream direction.

1.2.3 Earthwork associated with roadway, and construction of gravity wall, curb, subgrade, base, pavement, and sidewalk.

1.3 Area Estimates:

Three Oaks Parkway Extension: Phase 1

Total site area: 87.84 acres.
Total area to be disturbed: 87.84 acres.

1.4 Runoff Data:

Runoff coefficients:
Before 0.45
During: Varies from 0.45 to 0.65
After: 0.65

Soils Data: The results of the soil borings along the roadway are shown on the Roadway Soil Survey Sheet(s). The numbers for these are identified on the Key Sheet of these construction plans. In general, the soils are fine sands with varying amounts of silt, rock, clay, and shell fragments.

Outfall Information: There are 3 outfalls in Phase 1.

Description:	Location:		Est. Drainage Area Size (AC):	Outfall No:	Receiving Water:
	Latitude:	Longitude:			
BASIN "A" Control Structure	N26° 30' 39.43"	W81° 47' 59.63"	26.00	1	Six Mile Slough
BASIN "B" Control Structure	N26° 31' 31.98"	W81° 47' 51.60"	20.12	2	Six Mile Slough
BASIN "C" Control Structure	N26° 32' 05.27"	W81° 47' 52.11"	43.14	3	Six Mile Slough

2.0 CONTROLS:

2.1 Erosion And Sediment Controls:

In the Section 104 Erosion Control Plan, the Contractor shall describe the proposed stabilization and structural practices based on the Contractor's proposed Traffic Control Plan. The following recommended guidelines are based on the Traffic Control Plan (TCP) outlined in the construction plans. Where the following Traffic Control Plan (TCP) outlined in these construction plans, the Contractor may chose to accept the following guidelines or modify them in the Section 104 Erosion Control Plan, subject to approval of the Engineer. As work progresses, the Contractor shall modify the plan to adapt to seasoned variation, changes in construction activities, and the need for better erosion control practices.

For each construction phase, install perimeter controls after clearing and grubbing necessary for installation of controls but before beginning other work for the construction phase. Remove perimeter controls only after all upstream areas are stabilized.

1.5.5 Locations of Temporary Controls: These are shown on the Erosion Control Sheets. Tables providing summaries of temporary erosion and sediment control items are provided in the Summary of Quantity Sheets.

1.5.6 Locations of Permanent Controls: The existing and proposed detention/retention area are the primary permanent stormwater management controls. These are shown on the Plan/Profile Sheets and Drainage Detail sheets.

1.5.7 Areas To Be Stabilized: Temporary stabilization practices are required in the same location as the temporary controls mentioned above. Permanent stabilization is shown on the Typical Section Sheets, the Plan-Profile Sheets and the detention/retention Area Details Sheets.

1.5.8 Surface Water: The existing Six Mile Slough System is the main surface water outfall for this site. The detention/retention outfall locations are shown on the Basin Drainage Map sheets.

1.5.9 Discharge Points To Surface Waters: They are shown on the Basin Drainage Map Sheets.

1.5.10 Receiving Waters: See Item 1.4 for the outfall locations and receiving water names. There are wetland areas on the project site.

2.1.2.2 Permanent:

Sod stormwater Detention/Retention areas.

2.2 Stormwater Management:

The stormwater systems will be constructed to convey runoff to five (5) stormwater Detention/Retention Areas. The facilities have been permitted by the Florida Department of Environmental Protection (FDEP) and Lee County, and comply with applicable design standards.

2.3 Other Controls:

2.3.1 Waste Disposal:

In the Section 104 Erosion Control Plan, the Contractor shall describe the proposed methods to prevent the discharge of solid materials, including building materials, to waters of the United States. The proposed methods shall include at least the following, unless otherwise approved by the Engineer.

2.3.1.1 Providing litter control and collection within the project during construction activities.

2.3.1.2 Disposing of all fertilizer or other chemical containers according to EPA's standard practices as detailed by the manufacturer.

2.3.1.3 Disposing of solid materials including building and construction materials off the project site but not in surface waters, or wetlands.

2.3.2 Off-Site Vehicle Tracking & Dust Control:

In the Section 104 Erosion Control Plan, the Contractor shall describe the proposed methods for minimizing offsite vehicle tracking of sediments and generating dust. The proposed methods shall include at least the following, unless otherwise approved by the Engineer.

2.3.2.1 Covering loaded haul trucks with tarpaulins.

2.3.2.2 Removing excess dirt from roads, daily.

2.3.2.3 Stabilizing construction entrances according to Design Standards Index No. 106.

2.3.2.4 Using roadway sweepers with water during dust generating activities such as excavation and milling operations.

2.3.3 State and Local Regulations For Waste Disposal, Sanitary Sewer, Or Septic Tank Regulations:

In the Section 104 Erosion Control Plan, the Contractor shall describe the procedures for comply with applicable state and local regulations for waste disposal, and sanitary sewer or septic systems.

2.3.4 Fertilizers and Pesticides:

In the Section 104 Erosion Control Plan, the Contractor shall describe the procedures for applying fertilizers and pesticides. The proposed procedures shall comply with applicable subsections of either Section 570 of 577 of the Specifications.

2.3.5 Toxic Substances:

In the Section 104 Erosion Control Plan, the Contractor shall provide a list of toxic substances that are likely to be used on the job and provide a plan addressing the generation, application, migration, storage, and disposal of these substances.

2.3.6 Approved State and Local Plans and Permits:

2.3.6.1 FDEP Rule Chapter 62-25 F.A.C.

2.3.6.2 Lee County Land Development Code.

3.0 MAINTENANCE:

In the Section 104 Erosion Control Plan, the Contractor shall provide a plan for maintaining all erosion and sediment controls throughout construction. The maintenance plan shall at a minimum, comply with the following.

3.1 Silt Fence: Maintain per Section 104. The Contractor should anticipate replacing silt fence on twelve (12) month intervals.

3.2 Synthetic Bales: Remove sediment when it reaches ½ height of bales or when water ponds in unacceptable amounts or areas. The Contractor should anticipate replacing bales on three (3) month intervals.

3.3 The Detention/Retention Areas are temporary sediment basins until the areas that drain to them are stabilized, so until then, remove sediment from the Detention/Retention Areas when it becomes six (6) inches deep at any point.

3.4 Turbidity Barriers: The Contractor shall provide a plan for maintaining all turbidity barriers throughout construction. The maintenance plan shall at a minimum, comply with Section 103 and Section 104.

4.0 INSPECTIONS:

Qualified personnel shall inspect the following items at least once every seven (7) calendar days and within 24 hours of the end of a storm that is 0.50 inches or greater. To comply, the Contractor shall install and maintain rain gages and record the daily rainfall. Where sites have been permanently stabilized, inspections shall be conducted at least once every month. The Contractor shall also inspect that controls installed in the field agree with the latest Stormwater Pollution Prevention Plan. The Contractor shall also inspect the following items that are associated with the Project:

4.0.1 Points of discharge to waters of the United States.

4.0.2 Points of discharge to municipal separate storm sewer systems.

4.0.3 Disturbed areas of the site that have not been finally stabilized.

4.0.4 Areas used for storage of materials that are exposed to precipitation.

4.0.5 Structural controls.

4.0.6 Stormwater management systems.

4.0.7 Locations where vehicles enter or exit the site.

The Contractor shall initiate repairs within 24 hours of inspections that indicate items are not in good working order and\or do not meet the requirements outlined in the SWPPP.

If inspections indicate that the installed stabilization and structural practices are not sufficient to minimize erosion, retain sediment, and prevent discharging pollutants, the Contractor shall provide additional measures, as approved by the Engineer.

5.0 NON-STORMWATER DISCHARGES:

In the Section 104 Erosion Control Plan, the Contractor shall identify all anticipated non-stormwater discharges (except flows from fire fighting activities). The Contractor shall describe the proposed measures to prevent pollution of these non-stormwater discharges. If the Contractor encounters contaminated soil or groundwater, contact DEP National Response Center at 1-800-424-8802.

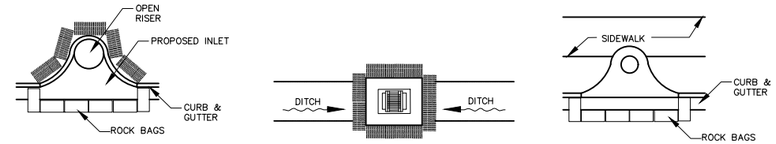

PROTECTION AROUND INLETS

N.T.S.

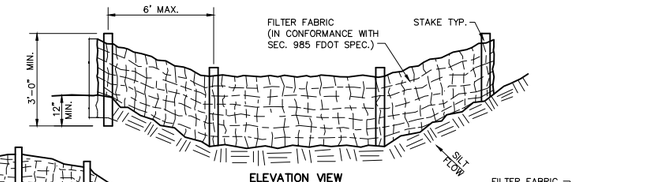

ELEVATION VIEW
SILT SCREEN PLACEMENT

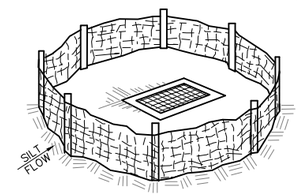

SILT FENCE PROTECTION AROUND DITCH BOTTOM INLETS

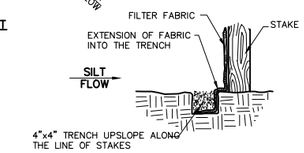

CONSTRUCTION OF A SILT FENCE

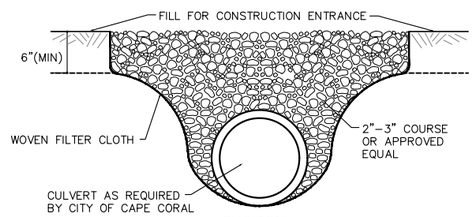

SECTION

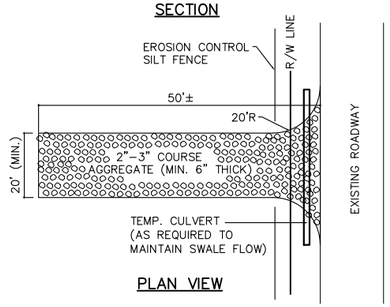

PLAN VIEW

NOTE:

1.) THE ENTRANCE SHALL BE MAINTAINED IN A CONDITION THAT WILL PREVENT TRACKING OR FLOWING OF SEDIMENT ONTO PUBLIC R/W. THIS MAY REQUIRE TOP DRESSING, REPAIR AND/OR CLEAN OUT OF ANY MEASURES USED TO TRAP SEDIMENT.

2.) WHEN NECESSARY, WHEELS SHALL BE CLEANED PRIOR TO ENTRANCE ONTO PUBLIC R/W.

3.) WHEN WASHING IS REQUIRED, IT SHALL BE DONE ON AN AREA STABILIZED W/ CRUSHED STONE THAT DRAINS INTO AN APPROVED SEDIMENT TRAP OR SEDIMENT BASIN.

TEMP. CULVERT • CONSTRUCTION ENTRANCE

N.T.S.

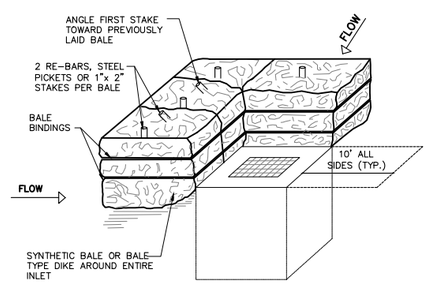

ANCHORING DETAIL SYNTHETIC BALE PLACEMENT

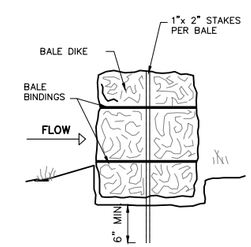

BEDDING DETAIL

NOTE: RESTORE ALL INLETS IN R/W WITH SOD ON ALL SIDES (10' TYP.)

1. PRIOR TO CONSTRUCTION, FILTER FABRIC, SILT SCREENS, SYNTHETIC BALES OR OTHER APPROVED EROSION CONTROL DEVICES SHALL BE INSTALLED ACROSS THE SWALE AT THE LOWEST DISTURBED POINT TO PREVENT EROSION MATERIAL FROM LEAVING THE CONSTRUCTION AREA, INCLUDING ANY VACANT AREAS USED FOR INGRESS AND EGRESS.

2. ALL AFFECTED STORMWATER PIPES, INLETS AND CATCH BASINS SHALL BE PROTECTED BY EROSION CONTROL DEVICES TO PREVENT CONSTRUCTION RELATED EROSION MATERIAL FROM ENTERING THE STORMWATER SYSTEM.

3. THE EROSION CONTROL DEVICES SHALL BE INSTALLED PRIOR TO ANY CONSTRUCTION PROCESS AND SHALL REMAIN IN PLACE UNTIL STABILIZED WITH SOD AND THE VACANT AREAS ARE SEEDED AND MULCHED.

EROSION CONTROL

N.T.S.

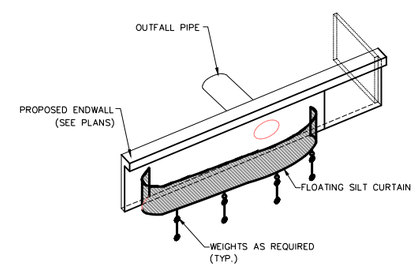

TURBIDITY CURTAIN

N.T.S.

THE CONTRACTOR SHALL BE RESPONSIBLE TO HAVE APPROVED TURBIDITY SCREENS IN PLACE DURING ANY AND ALL CLEARING, EXCAVATING, JETTING AND BACKFILLING OPERATIONS WHICH TOTALLY ENCLOSES THE CONSTRUCTION SITE. SCREENS ARE TO REMAIN IN PLACE 24 HOURS MINIMUM AFTER CONSTRUCTION ON A SPECIFIC DRAINAGE BASIN CEASES OR UNTIL TURBIDITY LEVEL IS 20 NTU ABOVE THE PRE-CONSTRUCTION TURBIDITY LEVEL. SCREENS MUST EXTEND FROM THE WATER SURFACE TO THE BOTTOM AND BE ADEQUATELY WEIGHED TO KEEP THEM IN PLACE DURING ALL OPERATIONS. THERE SHALL BE ADEQUATE FLOATATION AT THE SURFACE TO PREVENT OVERFLOW. THIS FLOATATION MUST BE BRIGHTLY COLORED TO MAXIMIZE VISIBILITY.

TURBIDITY CONTROL SILT SCREEN

N.T.S.

P:\CAD\2017\17-372\3-Oaks-Ph1\PLOT_PHASE1\sppp-notes_3-oaks.dwg, 103 STORMWATER POLLUTION, 4/29/2019 4:08:51 PM, Avalon Engineering Inc.

DATE	BY	REVISION DESCRIPTION

60% PLANS

AVALON PROJECT: 17-372
PROJ. MGR. Jack Schrager, PE, VP
LEE COUNTY DOT PROJECT: CN160642/ANB
LDOT PROJ. MGR. VINCENT MILLER

AVALON ENGINEERING, INC.
2503 DEL PRADO BLVD, SUITE 200
CAPE CORAL, FLORIDA 33904
FBPE#3128 (239) 573-2077

LEE COUNTY DEPARTMENT OF TRANSPORTATION
(239) 533-8580

THREE OAKS PARKWAY EXTENSION
PHASE 1: FIDDLESTICKS CANAL TO STA 265+20
LEE COUNTY, FLORIDA

STORMWATER POLLUTION PREVENTION PLAN

SHEET 103 of 110

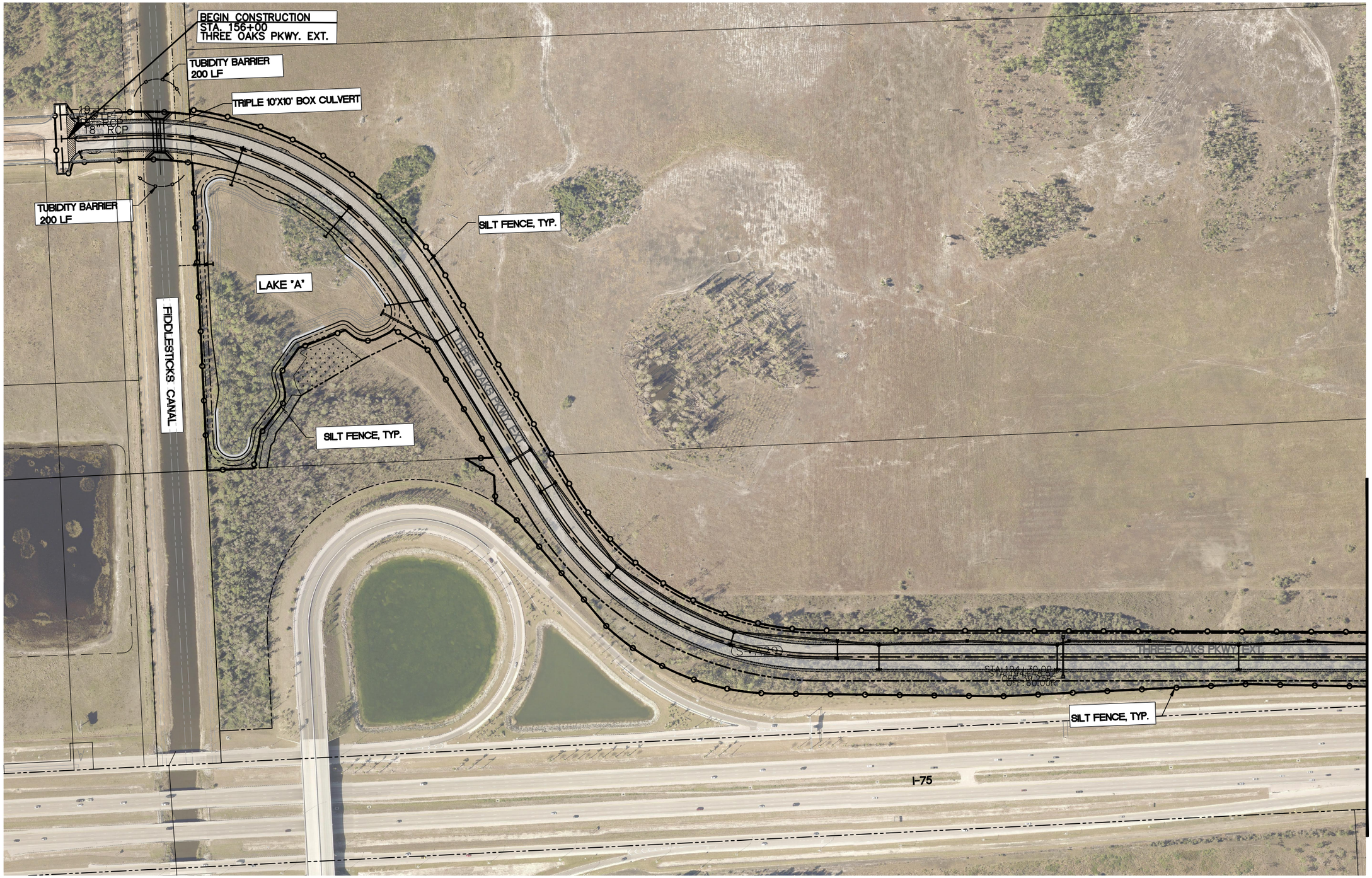

0' 100' 300'

SCALE: 1"= 300'

LEGEND

SILT FENCE

TURBIDITY BARRIER

P:\CAD\2017\17-372\3-Oaks-Ph1\PLOT_PHASE1\SILT_FENCE.dwg, 104 EROSION CONTROL PLAN, 4/29/2019 4:09:08 PM, Avalon Engineering Inc.

DATE	BY	REVISION DESCRIPTION

60% PLANS

AVALON PROJECT: 17-372
PROJ. MGR. Jack Schrager, PE, VP
LEE COUNTY DOT PROJECT: CN160642/ANB
LDOT PROJ. MGR. VINCENT MILLER

AVALON ENGINEERING, INC.
2503 DEL PRADO BLVD, SUITE 200
CAPE CORAL, FLORIDA 33904
FBPE#3128 (239) 573-2077

LEE COUNTY DEPARTMENT OF TRANSPORTATION
(239) 533-8580

THREE OAKS PARKWAY EXTENSION
PHASE 1: FIDDLESTICKS CANAL TO STA 265+20
LEE COUNTY, FLORIDA

EROSION CONTROL PLAN
THREE OAKS PKWY EXT.

SHEET
104 of 110

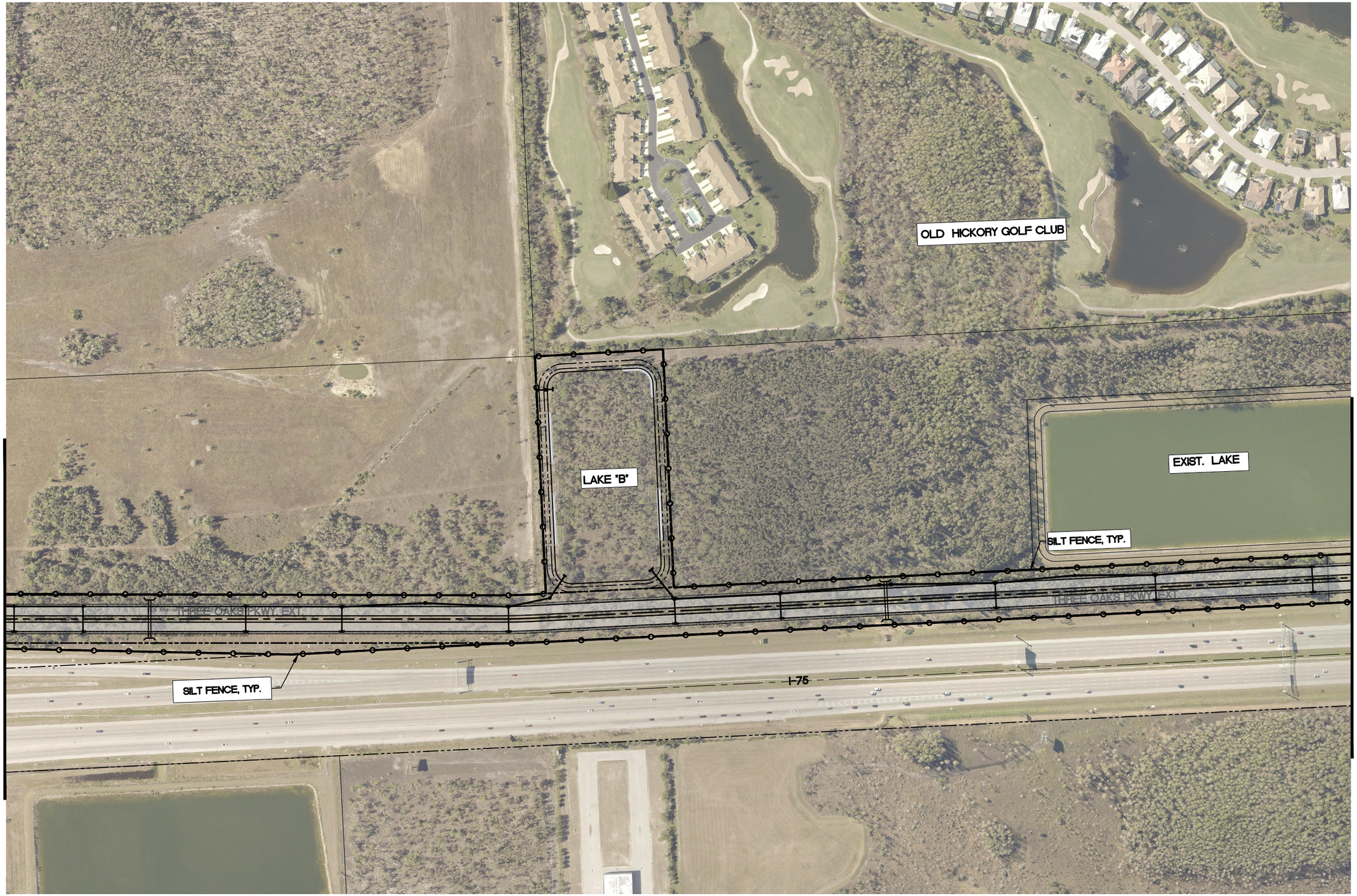

N

0' 100' 300'

SCALE: 1"= 300'

LEGEND

SILT FENCE

P:\CAD\2017\17-372\3-Oaks-Ph1\PLOT_PHASE1\SILT_FENCE.dwg, 105 EROSION CONTROL PLAN, 4/29/2019 4:09:16 PM, Avalon Engineering Inc.

DATE	BY	REVISION DESCRIPTION

60% PLANS

AVALON PROJECT: 17-372
PROJ. MGR. Jack Schrager, PE, VP
LEE COUNTY DOT PROJECT: CN160642/ANB
LDOT PROJ. MGR. VINCENT MILLER

AVALON ENGINEERING, INC.
2503 DEL PRADO BLVD, SUITE 200
CAPE CORAL, FLORIDA 33904
FBPE#3128 (239) 573-2077

LEE COUNTY DEPARTMENT OF TRANSPORTATION
(239) 533-8580

THREE OAKS PARKWAY EXTENSION
PHASE 1: FIDDLESTICKS CANAL TO STA 265+20
LEE COUNTY, FLORIDA

EROSION CONTROL PLAN
THREE OAKS PKWY EXT.

SHEET
105 of 110

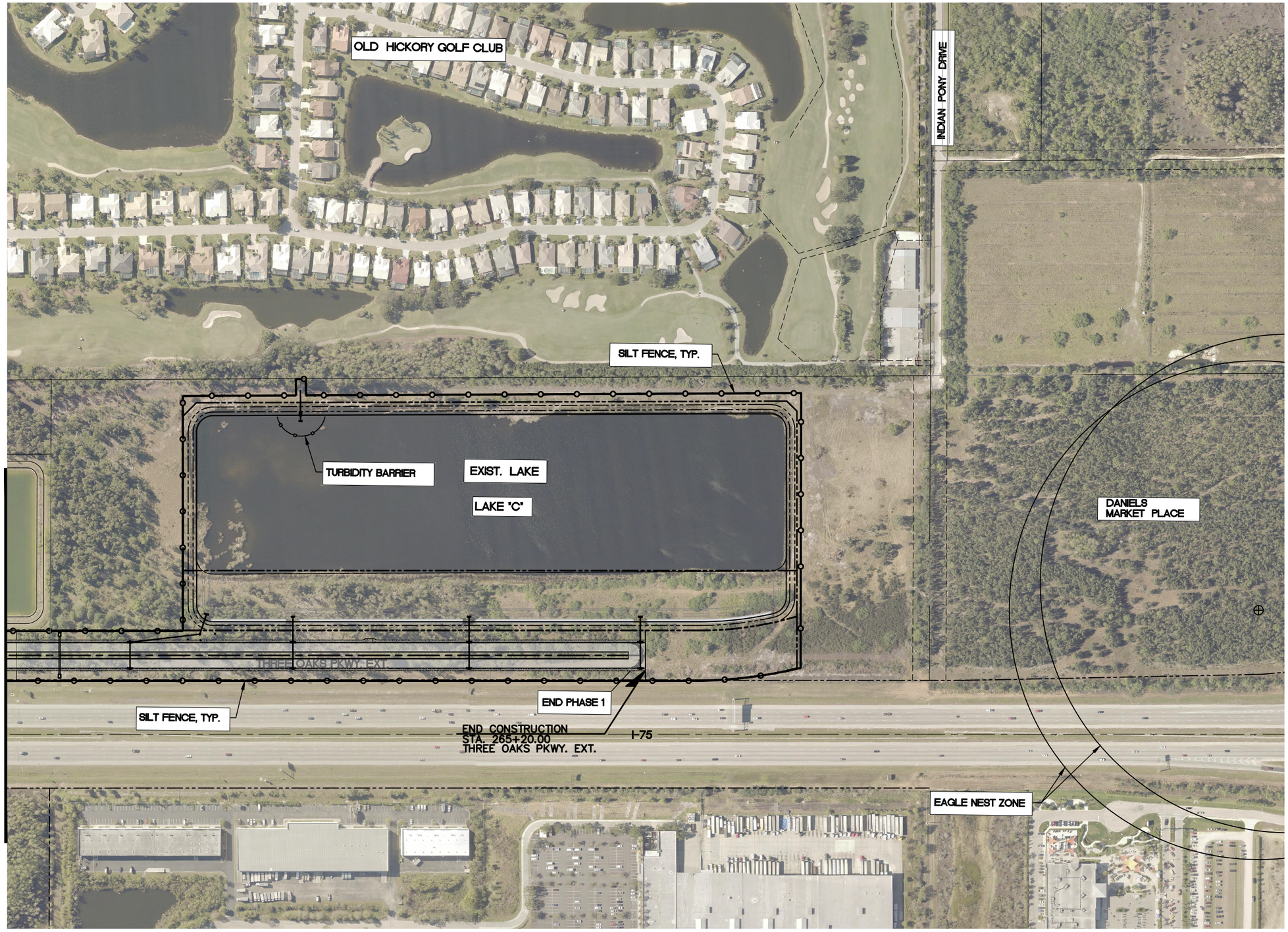

0' 100' 300'

SCALE: 1"= 300'

LEGEND

SILT FENCE

TURBIDITY BARRIER

P:\CAD\2017\17-372\3-Oaks-Ph1\PLOT_PHASE1\SILT_FENCE.dwg, 106 EROSION CONTROL PLAN, 4/29/2019 4:09:27 PM, Avalon Engineering Inc.

DATE	BY	REVISION DESCRIPTION

60% PLANS

AVALON PROJECT: 17-372
PROJ. MGR. Jack Schrager, PE, VP
LEE COUNTY DOT PROJECT: CN160642/ANB
LDOT PROJ. MGR. VINCENT MILLER

AVALON ENGINEERING, INC.
2503 DEL PRADO BLVD, SUITE 200
CAPE CORAL, FLORIDA 33904
FBPE#3128 (239) 573-2077

LEE COUNTY DEPARTMENT OF TRANSPORTATION
(239) 533-8580

THREE OAKS PARKWAY EXTENSION
PHASE 1: FIDDLESTICKS CANAL TO STA 265+20
LEE COUNTY, FLORIDA

EROSION CONTROL PLAN
THREE OAKS PKWY EXT.

SHEET 106 of 110

NOTE:
1.) ALL EXISTING AND PROPOSED GRADES SHOWN REFER TO N.A.V.D. 1988. TO CONVERT TO N.G.V.D. 1929 ADD 1.18 FT.

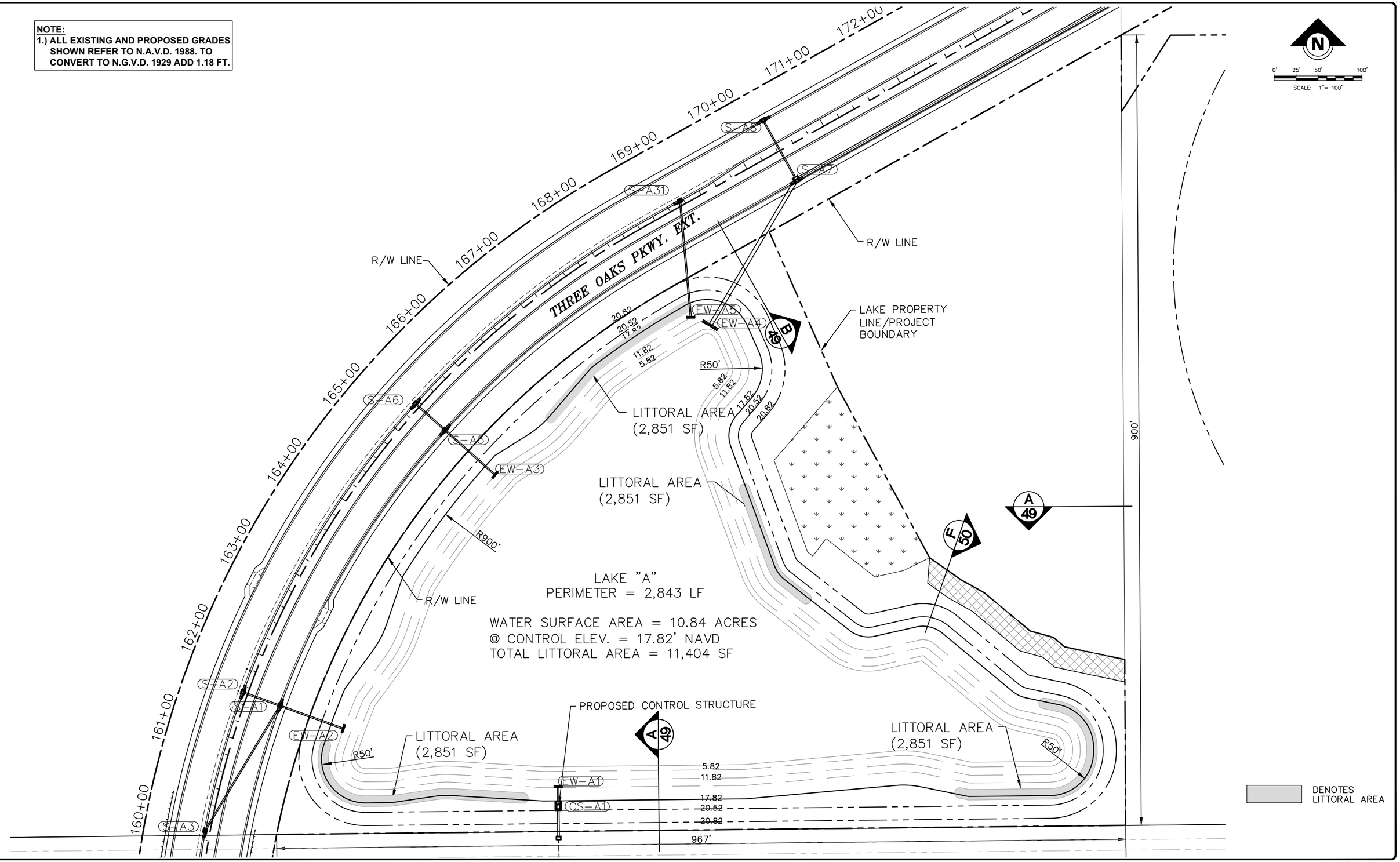

DATE	BY	REVISION DESCRIPTION

60% PLANS

AVALON PROJECT: 17-372
PROJ. MGR. Jack Schrager, PE, VP
LEE COUNTY DOT PROJECT: CN160642/ANB
LDOT PROJ. MGR. VINCENT MILLER

AVALON ENGINEERING, INC.
2503 DEL PRADO BLVD, SUITE 200
CAPE CORAL, FLORIDA 33904
FBPE#3128 (239) 573-2077

LEE COUNTY DEPARTMENT OF TRANSPORTATION
(239) 533-8580

THREE OAKS PARKWAY EXTENSION
PHASE 1: FIDDLESTICKS CANAL TO STA 265+20
LEE COUNTY, FLORIDA

LAKE-A LITTORAL PLANTINGS
THREE OAKS PKWY EXT.

SHEET 107 of 110

P:\CAD\2017\17-372\3-Oaks-Ph1\PLOT_PHASE1\Litoral_plantings.dwg, 107 LAKE-A LITTORAL PLANTINGS, 4/29/2019 4:09:47 PM, Avalon Engineering Inc.

DENOTES LITTORAL AREA

NOTE:
1.) ALL EXISTING AND PROPOSED GRADES SHOWN REFER TO N.A.V.D. 1988. TO CONVERT TO N.G.V.D. 1929 ADD 1.18 FT.

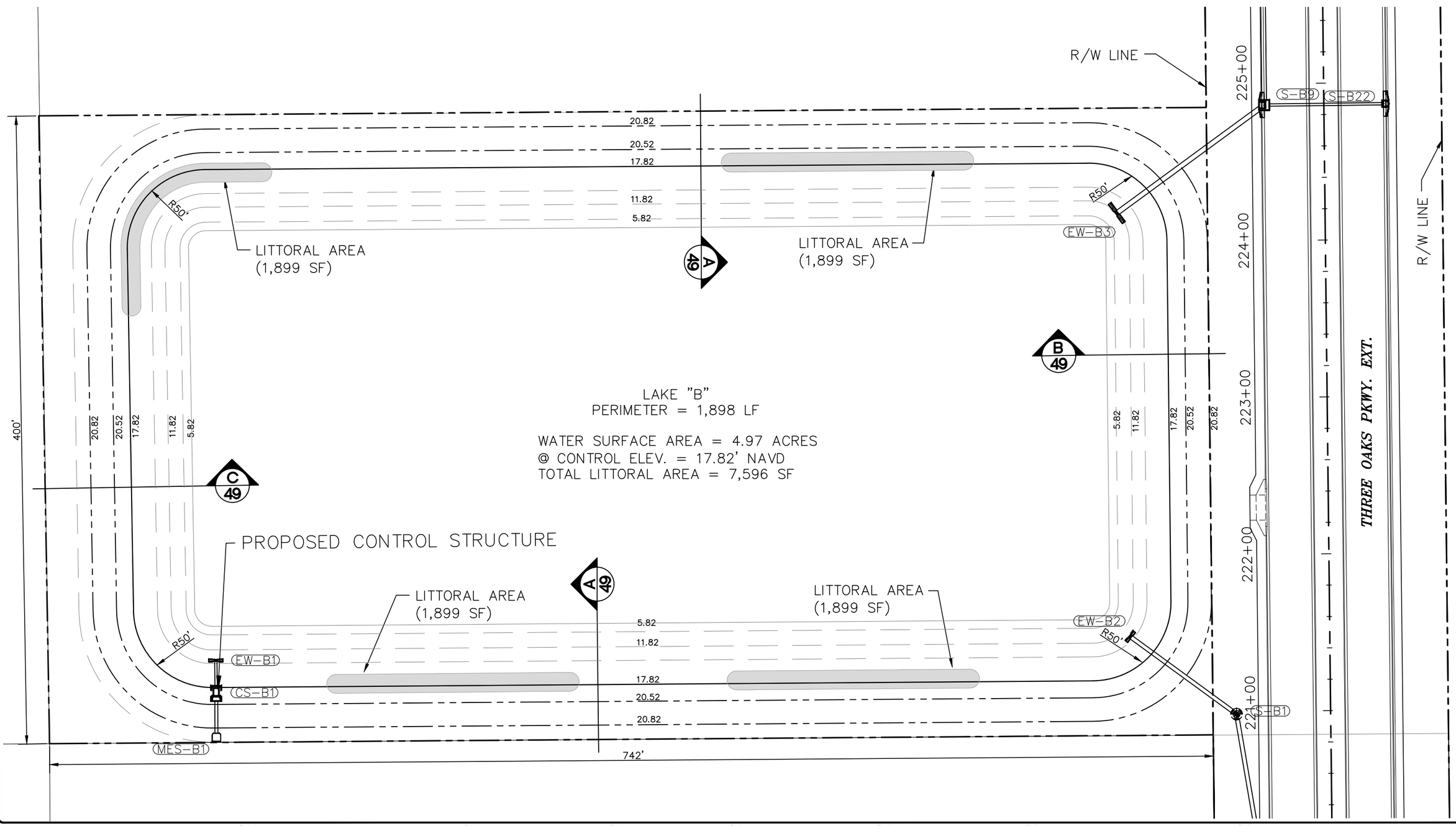

P:\CAD\2017\17-372\3-Oaks-Ph1\PLOT_PHASE1\Litoral_plantings.dwg, 108 LAKE-B LITTORAL PLANTINGS, 4/29/2019 4:09:52 PM, Avalon Engineering Inc.

DATE	BY	REVISION DESCRIPTION

60% PLANS

AVALON PROJECT: 17-372
PROJ. MGR. Jack Schrager, PE, VP
LEE COUNTY DOT PROJECT: CN160642/ANB
LDOT PROJ. MGR. VINCENT MILLER

AVALON ENGINEERING, INC.
2503 DEL PRADO BLVD, SUITE 200
CAPE CORAL, FLORIDA 33904
FBPE#3128 (239) 573-2077

LEE COUNTY DEPARTMENT OF TRANSPORTATION
(239) 533-8580

THREE OAKS PARKWAY EXTENSION
PHASE 1: FIDDLESTICKS CANAL TO STA 265+20
LEE COUNTY, FLORIDA

LAKE-B LITTORAL PLANTINGS
THREE OAKS PKWY EXT.

SHEET 108 of 110

NOTE:
1.) ALL EXISTING AND PROPOSED GRADES SHOWN REFER TO N.A.V.D. 1988. TO CONVERT TO N.G.V.D. 1929 ADD 1.18 FT.

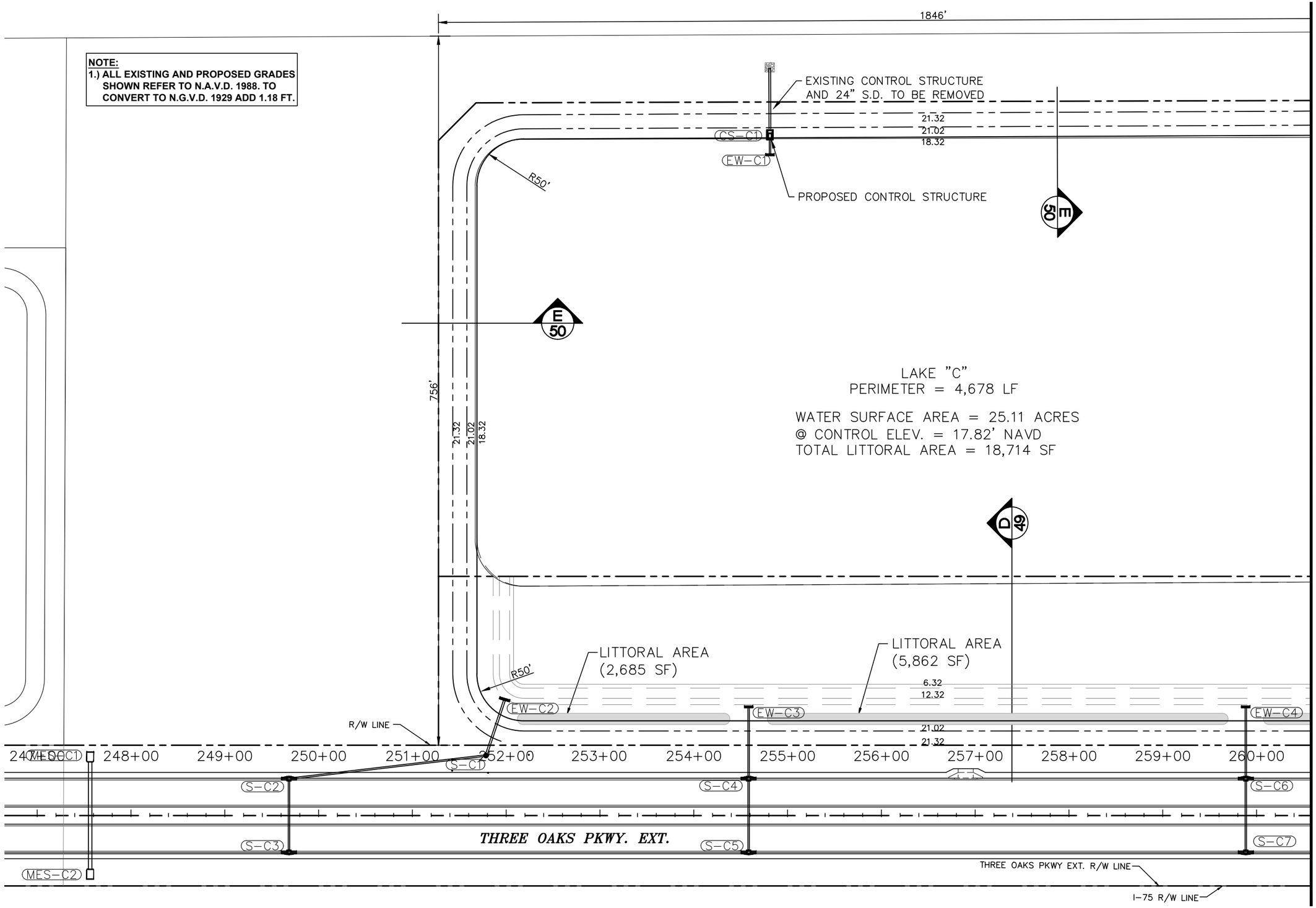

P:\CAD\2017\17-372\3-Oaks-Ph1\PLOT_PHASE1\Litoral_plantings.dwg, 109 LAKE-C LITTORAL PLANTINGS (S), 4/29/2019 4:09:56 PM, Avalon Engineering Inc.

DATE	BY	REVISION DESCRIPTION

60% PLANS

AVALON PROJECT: 17-372
PROJ. MGR. Jack Schrager, PE, VP
LEE COUNTY DOT PROJECT: CN160642/ANB
LDOT PROJ. MGR. VINCENT MILLER

AVALON ENGINEERING, INC.
2503 DEL PRADO BLVD, SUITE 200
CAPE CORAL, FLORIDA 33904
FBPE#3128 (239) 573-2077

LEE COUNTY DEPARTMENT OF TRANSPORTATION
(239) 533-8580

THREE OAKS PARKWAY EXTENSION
PHASE 1: FIDDLESTICKS CANAL TO STA 265+20
LEE COUNTY, FLORIDA

LAKE-C LITTORAL PLANTINGS (S)
THREE OAKS PKWY EXT.

SHEET 109 of 110

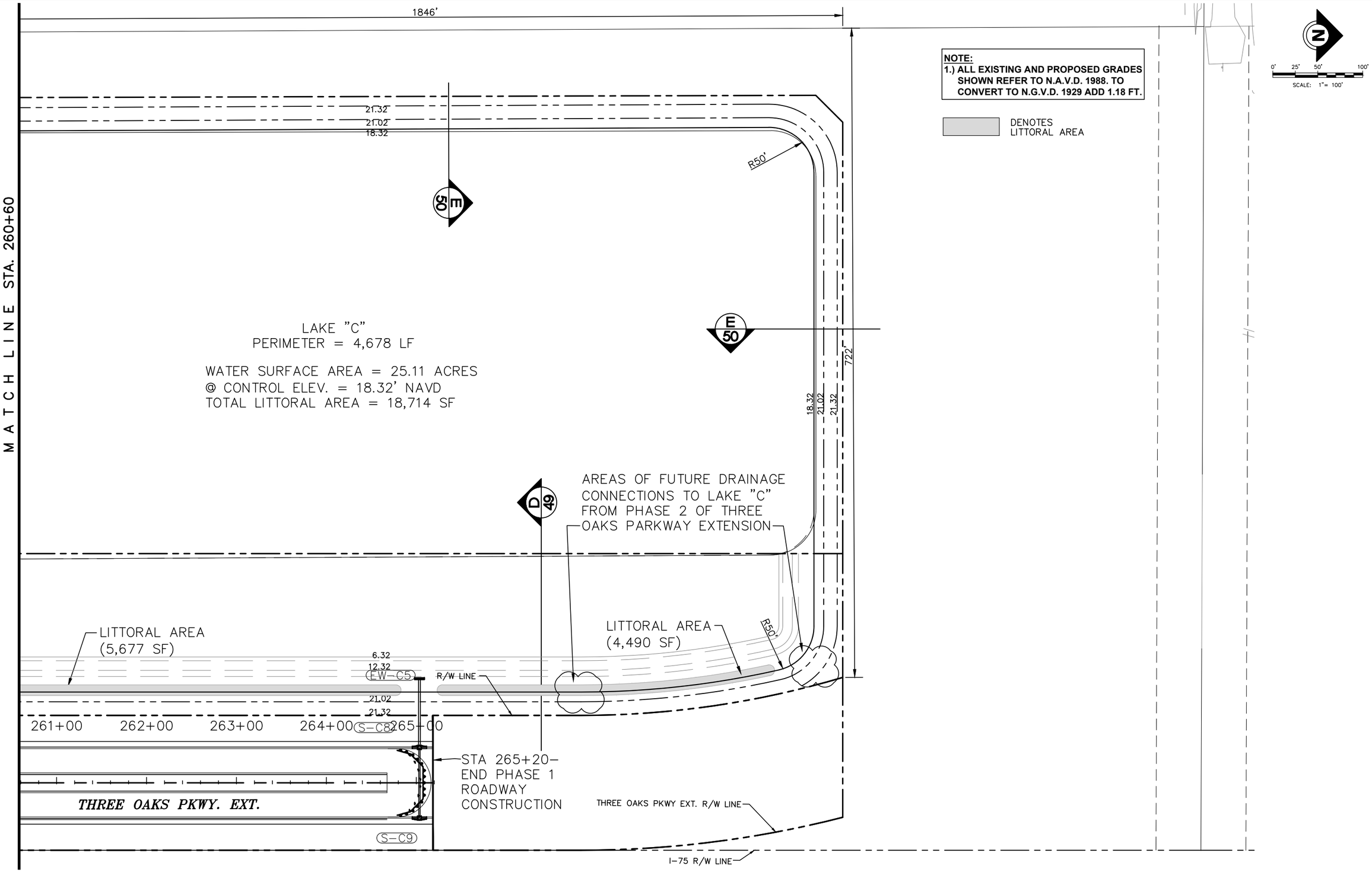

P:\CAD\2017\17-372\3-Oaks-Ph1\PLOT_PHASE1\Litoral_plantings.dwg, 110 LAKE-C LITTORAL PLANTINGS (N), 4/29/2019 4:10:01 PM, Avalon Engineering Inc.

DATE	BY	REVISION DESCRIPTION

60% PLANS

AVALON PROJECT: 17-372
PROJ. MGR. Jack Schrager, PE, VP
LEE COUNTY DOT PROJECT: CN160642/ANB
LDOT PROJ. MGR. VINCENT MILLER

AVALON ENGINEERING, INC.
2503 DEL PRADO BLVD. SUITE 200
CAPE CORAL, FLORIDA 33904
FBPE#3128 (239) 573-2077

LEE COUNTY DEPARTMENT OF TRANSPORTATION
(239) 533-8580

THREE OAKS PARKWAY EXTENSION
PHASE 1: FIDDLESTICKS CANAL TO STA 265+20
LEE COUNTY, FLORIDA

LAKE-C LITTORAL PLANTINGS (N)
THREE OAKS PKWY EXT.

SHEET 110 of 110